N46(1)1,2&4
N9(13),2&4

UNITED STATES DEPARTMENT OF THE INTERIOR
BUREAU OF INDIAN AFFAIRS
NAVAJO REGION D.O.T.
ROUTE 46

APPROVED
CONSTRUCTION
DRAWINGS
January 7, 2009

PROJECTS N46(1)1,2&4, N9(13)2&4 AND PUEBLO PINTADO BRIDGE
I.D. NO. N3429200

⚠ - Sheets Revised May 17, 2010 per Negotiation Meeting conducted on May 13, 2010

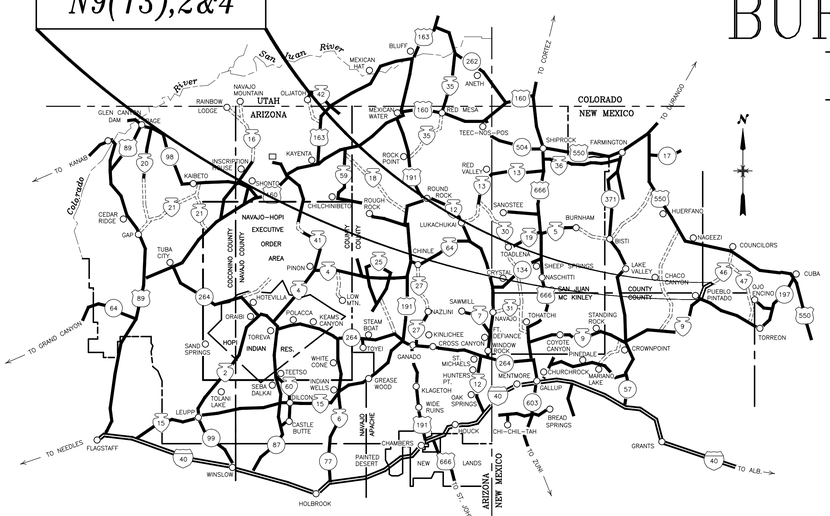

NAVAJO RESERVATION MAP
N.T.S.

LEGEND

STATE LINE
RESERVATION LINE
COUNTY LINE
TOWNSHIP or RANGE LINE
SECTION LINE
NATIONAL FOREST LINE (SHADING ON INSIDE OF LINE)
HIGHWAY RIGHT–OF–WAY LINE
UNFENCED PROPERTY
SECTION CORNER and 1/4 CORNER
CUT LIMITS
FILL LIMITS
WATER LINE EASEMENT (W/E)
OVERHEAD ELECTRIC LINE (OHE)
TELEPHONE LINE (TEL)
POLE GUY and ANCHOR
TRAFFIC SIGN
GUARDRAIL (PLANNED / EXISTING)
DELINEATOR (ONE WAY–TYPE 1a / TWO WAY–TYPE 1b)
BARBED WIRE FENCE (GATE)
CHAIN LINK FENCE
CATTLE GUARD (PLANNED / EXISTING)
CULVERTS (PLANNED / EXISTING)
CONCRETE BOX CULVERTS (PLANNED / EXISTING)
GROUND LINE – EARTH
GROUND LINE – ROCK
EXISTING ROAD (WIDTH & TYPE)
SIDE ROAD TURNOUT (PLANNED / EXISTING)
TREES and SHRUBS
PROPOSED DITCH LINE
FURROW DITCH OR OFFSITE DRAINAGE
DIKE or DITCH BLOCK
RIPRAP
RAILROAD TRACK
WATER LINE (W)
IRRIGATION LINE (IRR)
WELL
DWELLING
SCHOOL
CHURCH
WINDMILL
RIGHT–OF–WAY MONUMENT (PLANNED / EXISTING)
TEMPORARY BENCH MARK (TBM #)
CONTROL POINT (CP #)
BORING LOCATION
OBJECT MARKERS (TYPE II / TYPE III)
EROSION CONTROL MAT

INDIAN SERVICE | COUNTY | STATE | FEDERAL

PAVED | GRADED | UNIMPROVED

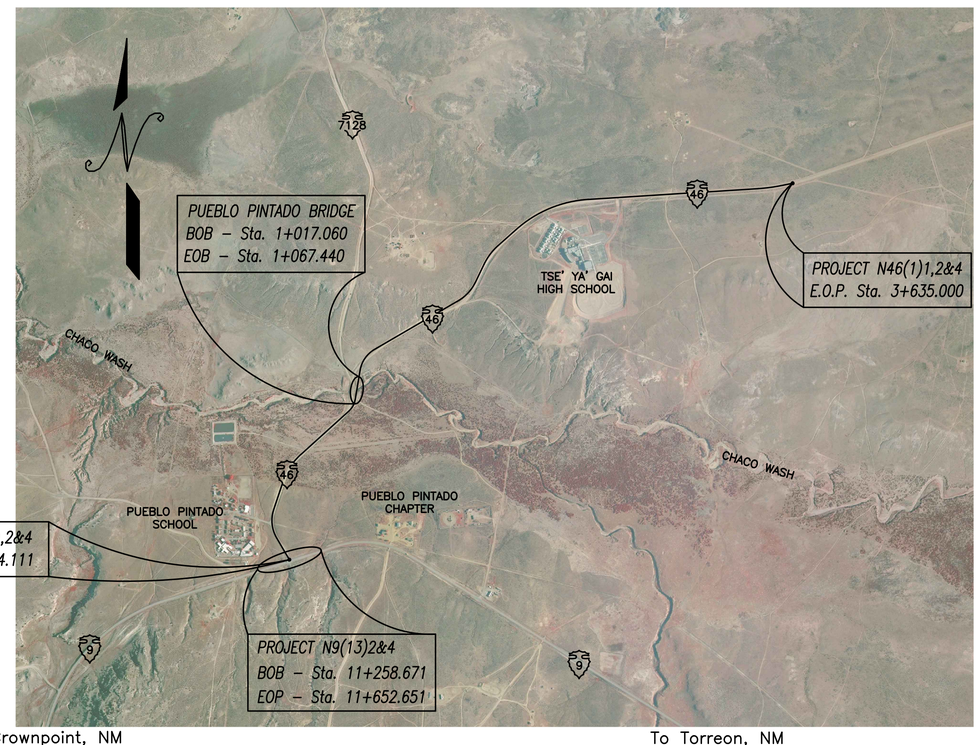

INDEX TO SHEETS

SHT. NO.	DESCRIPTION
⚠ 1	TITLE SHEET
⚠ 2	TYPICAL ROADWAY SECTIONS & GENERAL NOTES
⚠ 3	SUMMARY OF QUANTITIES AND TABLES
4	QUANTITY TABLES
5	SUPERELEVATION GRADE TABULATIONS
6–10	N46 – ROADWAY PLAN AND PROFILE SHEETS
(Sht. 11) ⚠ 11–13	N9 – ACCELERATION / DECELERATION LANE DETAILS
⚠ 14	BRIDGE NOTES
15	BRIDGE LOCATION PLAN
16	BRIDGE LOCATION PROFILE
17	PILE LAYOUT AND BORING LOGS
18–20	BORING LOGS
21	EROSION CONTROL PLAN
22	EROSION CONTROL AND RIPRAP DOWNDRAIN DETAILS
23	ABUTMENT DETAILS
24	PIER DETAILS
25	ABUTMENT AND PIER DIAPHRAGM DETAILS
26	PIER WALL DETAILS
27	WINGWALL DETAILS
28	TYPICAL BRIDGE SECTION
29	BEAM SEAT AND BEARING PAD DETAILS
30	FRAMING PLAN
31	BEAM DETAILS
32	DECK REINFORCEMENT
33	DECK AND WINGWALL ELEVATIONS
34	APPROACH SLAB
35	REINFORCING SCHEDULE
36	STEEL BRIDGE RAIL
37	PEDESTRIAN FENCE DETAILS
38	CONSTRUCTION AND SIDEWALK DETAILS
39	TURNOUT DETAILS
40	BRIDGE RAIL/GUARDRAIL TRANSITION
41 & 42	STANDARD GUARDRAIL BARRIER END TREATMENT ET– PLUS
43	STANDARD PIPE INSTALLATION AND DITCH DETAILS
44	RIPRAP LINED DITCH & CUT TO FILL TRANSITION DETAILS
45	WIRE ENCLOSED RIPRAP DETAIL FOR BACKSLOPE PROTECTION
46	TEMPORARY TRAFFIC CONTROL, SHEET 1 OF 2
47	TEMPORARY TRAFFIC CONTROL, SHEET 2 OF 2
48	PERMANENT SIGNING DETAILS
49	SIGN POST AND HARDWARE DETAILS
50	DELINEATOR AND R.O.W MARKER DETAILS
51	PRE–CAST CONCRETE CATTLEGUARD DETAIL
52	CATTLEGUARD INSTALLATION DETAILS
53	STANDARD FENCING DETAILS
54	CHECK DAM DETAILS
55 & 56	STORMWATER POLLUTION EROSION/SEDIMENT CONTROL DETAILS
57 & 58	CULVERT DETAILS

LENGTH OF PROJECT

STATION TO STATION	METERS	KM
N46(1)1,2&4:		
BOP 0+004.111 – BOB 1+017.060	1,012.949	1.013
BOB 1+017.060 – EOB 1+067.440	50.380	0.050
EOB 1+067.440 – EOP 3+635.000	2,567.560	2.568
N9(13)2&4:		
BOP 11+288.670 – EOP 11+622.650	333.980	0.334
TOTALS	3,964.869	3.965

RIGHT–OF–WAY TABLE

ROW STATION BEGIN	ROW STATION END	ROW WIDTH LEFT	ROW WIDTH RIGHT
0+023.314	0+205.000	30.00m	30.00m
0+205.000	0+235.000	55.00m	30.00m
0+235.000	0+976.449	30.00m	30.00m
0+976.449	1+105.000	50.00m	50.00m
1+105.000	1+128.360	90.00m	50.00m
1+128.360	1+140.000	90.00m	30.00m
1+140.000	2+211.969	30.00m	30.00m
2+211.969	2+940.000	30.00m	21.00m
2+940.000	2+985.000	30.00m	18.00m
2+985.000	3+010.000	30.00m	33.00m
3+010.000	3+300.000	30.00m	18.00m
3+300.000	3+600.000	30.00m	15.00m
3+600.000	3+635.000	30.00m	12.00m

DESIGN DATA

Design Speed	50 km/h
Minimum Radius	90 m
Maximum Gradient	10 %
Min. Stopping Sight Distance	65 m
Min. Passing Sight Distance	345 m
2004 ADT	549 vpd
2024 Estimated ADT	815 vpd
Max. Superelevation	6%

U. S. DEPARTMENT OF THE INTERIOR
BUREAU OF INDIAN AFFAIRS
NAVAJO REGION OFFICE * DIVISION OF TRANSPORTATION

RECOMMENDED APPROVAL		APPROVAL	
AGENCY ROAD ENGINEER	DATE 8/14/09		
DIVISION MANAGER	DATE 8/7/09		
PLANNING AND DESIGN BRANCH CHIEF	DATE 8/07/09	REGIONAL DIRECTOR	DATE 8-7-09

REGION	STATE	RESERVATION	ROUTE	PROJECT NO.	SHEET	TOTAL SHEETS
NAVAJO	NEW MEXICO	NAVAJO	N46	N46(1)1,2&4	2	58

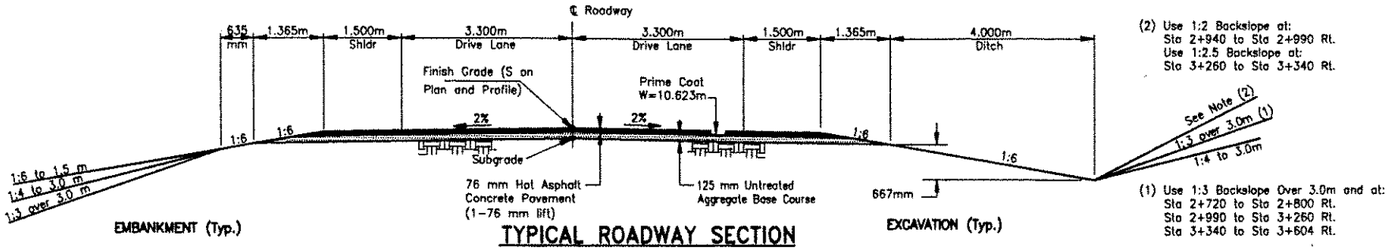

(2) Use 1:2 Backslope at:
Sta 2+940 to Sta 2+990 Rt.
Use 1:2.5 Backslope at:
Sta 3+260 to Sta 3+340 Rt.

(1) Use 1:3 Backslope Over 3.0m and at:
Sta 2+720 to Sta 2+800 Rt.
Sta 2+990 to Sta 3+260 Rt.
Sta 3+340 to Sta 3+604 Rt.

TYPICAL ROADWAY SECTION

LEFT	RIGHT
Sta 0+004.111 to Sta 0+978.300	Sta 0+004.111 to Sta 0+984.500
Sta 1+099.400 to Sta 3+605.000 *	Sta 1+106.500 to Sta 3+605.000 *

* – Sta. 3+605.000 to 3+635.000; Provide a Tapered 100 mm Thick Aggregate Base Course Surfaced Roadway from the New Roadway Width to the Existing Roadway Width. See Sheet 10 for Details.

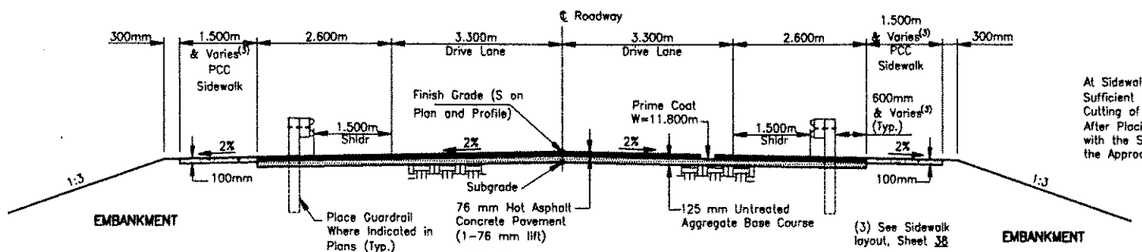

At Sidewalks, Over-construct Asphalt Width Sufficient to Allow for Full Depth (75 mm) Saw Cutting of Asphalt for Sidewalk to Asphalt Joint. After Placing Sidewalk, Seal Concrete/Asphalt Joint with the Same Joint Sealer Material Approved for the Approach Slab Fixed Joints.

ROADWAY SECTION @ SIDEWALK

LEFT	RIGHT
Sta 0+978.300 to Sta 1+009.444	Sta 0+984.500 to Sta 1+015.533
Sta 1+068.967 to Sta 1+099.400	Sta 1+075.056 to Sta 1+106.500

1. ALL WORKMANSHIP AND MATERIALS SHALL CONFORM TO THE STANDARD SPECIFICATIONS FOR CONSTRUCTION OF ROADS AND BRIDGES ON FEDERAL HIGHWAY PROJECTS (FP-03), AND THE SUPPLEMENTAL SPECIFICATIONS FOR THIS PROJECT.

2. ALL PERMANENT AND TEMPORARY ROADSIDE SIGNS SHALL BE PLACED IN ACCORDANCE WITH THE MANUAL ON UNIFORM TRAFFIC CONTROL DEVICES FOR STREETS AND HIGHWAYS (MUTCD), LATEST EDITION, AND IN ACCORDANCE WITH THE DETAILS ON THESE PLANS. PLACEMENT OF "STOP" BARS, AND PERMANENT TRAFFIC SIGNS AND PAVEMENT MARKINGS SHALL BE FIELD ADJUSTED AS DIRECTED BY THE COR/AOTR, AT NO ADDITIONAL COST TO THE GOVERNMENT.

3. THE TEMPORARY TRAFFIC CONTROL DETAILS SHOWN REFLECT GENERAL REQUIREMENTS FOR THIS PROJECT. THE CONTRACTOR IS RESPONSIBLE FOR PREPARING AND SUBMITTING A TRAFFIC CONTROL PLAN IN ACCORDANCE WITH THESE DETAILS, TAKING INTO ACCOUNT THE CONTRACTOR'S CONSTRUCTION SEQUENCING PLAN, THE MUTCD, AND THE SUPPLEMENTAL SPECIFICATIONS FOR SECTION 635, TEMPORARY TRAFFIC CONTROL.

4. THE DESIGN FEATURES SHOWN ON THESE DESIGN PLANS INCLUDING HORIZONTAL AND VERTICAL ALIGNMENTS, TYPICAL SECTIONS, AND OTHER DESIGN DETAILS SHALL NOT BE ALTERED OR MODIFIED IN ANYWAY DURING CONSTRUCTION WITHOUT THE EXPRESSED WRITTEN DIRECTION AND APPROVAL OF THE NAVAJO REGIONAL OFFICE-DIVISION OF TRANSPORTATION (NRO-DOT) DIVISION MANAGER, THROUGH THE CONTRACTING OFFICER/AWARDING OFFICIAL (CO/AO), UNLESS OTHERWISE NOTED IN THESE PLANS OR SPECIFICATIONS. DRAINAGE STRUCTURES SHALL BE INSTALLED AS SHOWN ON THE PLANS WITH ONLY MINOR CORRECTIONS IN LOCATION, SKEW, AND/OR INVERT ELEVATIONS AS NEEDED TO FIT FIELD CONDITIONS. TURNOUTS MAY NOT BE SHIFTED MORE THAN 5.0 METERS FROM THE LOCATIONS SHOWN ON THE PLANS WITHOUT THE APPROVAL OF THE NRO-DOT DIVISION MANAGER, THROUGH THE CO/AO.

5. THE CONTRACTOR SHALL ASSUME FULL RESPONSIBILITY AND EXPENSE FOR DISPOSAL OF TRASH AND/OR CONSTRUCTION DEBRIS IN ACCORDANCE WITH SECTIONS 107 AND 203 OF THE FP-03 AS WELL AS ANY AND ALL PERMIT REQUIREMENTS. THIS WORK SHALL BE INCIDENTAL OBLIGATIONS OF THE CONTRACTOR.

6. THE BIDDER SHALL READ AND MAKE CAREFUL EXAMINATION OF THE PLANS, SPECIFICATIONS, QUANTITIES, MATERIALS, SURVEYING REQUIREMENTS, AND VISIT THE SITE OF THE PROPOSED CONSTRUCTION TO BECOME FAMILIAR WITH THE SITE CONDITIONS AND LIMITATIONS BEFORE MAKING A PROPOSAL. THE CONTRACTOR WILL BE RESPONSIBLE FOR ANY AND ALL ERRORS RESULTING FROM THE FAILURE TO MAKE SUCH AN EXAMINATION. ANY INFORMATION DERIVED FROM THE MAPS, PLANS, SPECIFICATIONS, PROFILES, DRAWINGS OR THE ENGINEER, SHALL NOT RELIEVE THE CONTRACTOR FROM ANY RISK OR FROM FULFILLING THE TERMS OF THE CONTRACT.

7. NO WORK SHALL BE PERFORMED OR GROUND DISTURBED OUTSIDE OF THE DESIGNATED CONSTRUCTION LIMITS, AND IN NO CASE SHALL ANY WORK BE PERFORMED OUTSIDE THE DESIGNATED RIGHT-OF-WAY LIMITS WITHOUT THE WRITTEN APPROVAL OF THE NRO-DOT DIVISION MANAGER THROUGH THE CO/AO.

8. THE DETAILS SHOWN ON THE STORM WATER POLLUTION AND EROSION/SEDIMENT CONTROL DRAWINGS ARE GENERAL REQUIREMENTS TO BE USED BY THE CONTRACTOR IN PREPARING A STORM WATER POLLUTION PREVENTION PLAN ALONG WITH THE REQUIREMENTS IN SECTION 157 OF THE SUPPLEMENTAL SPECIFICATIONS AND SPECIAL CONTRACT REQUIREMENTS.

9. THE QUANTITIES SHOWN ARE FOR ESTIMATING PURPOSES ONLY AND TO COMPARE AND CANVAS BIDS. ACTUAL PAY QUANTITIES WILL BE DETERMINED IN THE FIELD FOR AUTHORIZED CHANGES THAT AFFECT THE QUANTITIES. ANY OVER-RUN OR UNDER-RUN OF QUANTITIES SHALL BE SUBJECT TO FAR CLAUSE 52.211-18, VARIATION IN ESTIMATED QUANTITY.

10. ALL TURNOUTS AS CALLED FOR ON THESE PLANS, SHALL EITHER BE CONSTRUCTED, REBUILT, RESHAPED, REMOVED AND/OR PAVED UP TO THE CATTLEGUARD, UNLESS OTHERWISE SHOWN. THIS WORK SHALL BE PAID FOR UNDER THE APPROPRIATE BID ITEMS.

11. EXCAVATION AND BEDDING/BACKFILL OF CULVERTS SHALL BE CONSIDERED INCIDENTAL TO THE INSTALLATION OF THE CULVERT. BEDDING AND BACKFILL MATERIAL SHALL MEET ALL REQUIREMENTS OF THE FP-03, SECTION 209. APPROVED EXCESS EXCAVATION MATERIAL MAY BE USED TO REBUILD TURNOUTS, DITCH BLOCKS, AND/OR PLACED ALONG ROADWAY SHOULDERS AS EMBANKMENT IN AREAS DESIGNATED BY THE COR/AOTR.

12. ALL FURROW DITCHES AND DRAINAGE DITCHES SHALL BE STAKED AND GRADED TO DRAIN UP TO THE RIGHT-OF-WAY LIMITS. EARTHEN DITCH BLOCKS, DIKES AND DITCHES SHALL BE CONSTRUCTED AS SHOWN ON THESE PLANS AND/OR ADDED AT LOCATIONS DESIGNATED BY THE AOTR/COR. ALL DITCH BLOCKS, DIKES AND FURROW DITCHES SHALL BE PAID FOR UNDER THE APPROPRIATE BID ITEMS FOR THIS WORK AS SHOWN IN THE BID SCHEDULE. AT ALL DRAINAGE PIPES, THE CONTRACTOR SHALL GRADE, AND SHAPE THE INLET AND OUTLET CHANNELS TO PRODUCE FREE FLOW TO EXISTING CHANNELS OR AS DIRECTED BY THE AOTR/COR. THIS WORK SHALL BE INCIDENTAL TO BID ITEMS IN THE 602 SERIES.

13. IMMEDIATELY PRIOR TO PLACING AGGREGATE BASE, THE TOP 152 mm FINISHED SUBGRADE (INCLUDING TURNOUTS) SHALL BE CHECKED FOR COMPACTION AND GRADE. IF COMPACTION DOES NOT MEET THE MINIMUM SPECIFIED COMPACTION REQUIREMENTS, THE SUBGRADE SHALL BE WATERED AND/OR SCARIFIED AS NEEDED AND RE-COMPACTED TO THE REQUIRED DENSITY. IN NO CASE SHALL ANY EMBANKMENT OR SURFACING MATERIAL BE PLACED ON FROZEN, MUDDY OR UNSTABLE NATURAL GROUND OR SUBGRADE. THIS WORK SHALL BE CONSIDERED AN INCIDENTAL OBLIGATION OF THE CONTRACTOR.

14. THE EARTHWORK TABLE SHOWN IS TO ASSIST THE CONTRACTOR IN ESTABLISHING A BID UNDER THE EARTHWORK ITEMS SHOWN IN THE BID SCHEDULE. ANY WASTE MATERIAL SHOWN ON THESE PLANS SHALL BE USED AS NECESSARY (IF APPROVED BY THE AOTR/COR) TO CONSTRUCT TURNOUTS AND DITCH AND ROAD BLOCKS AND/OR BE PLACED AS EMBANKMENT ALONG THE SHOULDERS IN AREAS AS DIRECTED BY THE AOTR/COR. WASTE MATERIAL NOT USED WITHIN THE PROJECT LIMITS, SHALL BE DISPOSED OF AS PER FP-03, SECTION 204.14.

15. THE LOCATIONS OF UTILITIES SHOWN IN THESE PLANS ARE APPROXIMATE AND ARE ONLY TO ASSIST THE CONTRACTOR IN COMPLETING THE WORK. THE CONTRACTOR SHALL CONTACT ALL UTILITY OWNERS PRIOR TO STARTING ANY CONSTRUCTION ACTIVITIES. THE CONTRACTOR SHALL VERIFY ALL UTILITIES AND THEIR LOCATIONS WITH THE UTILITY OWNERS PRIOR TO CONSTRUCTION. ANY UTILITIES DAMAGED DUE TO NEGLIGENCE OF THE CONTRACTOR SHALL BE RESTORED TO APPLICABLE CODE REQUIREMENTS AT THE CONTRACTOR'S EXPENSE.

16. THE CONTRACTOR SHALL REMOVE, CLEAN, AND STOCKPILE ALL EXISTING, SALVAGEABLE CULVERTS, CATTLE GUARDS AND FENCING MATERIALS, ETC., AS CALLED FOR ON THESE PLANS AND SECTIONS 203 AND 607 OF THE FP-03. ALL SALVAGEABLE MATERIALS AS DETERMINED BY THE AOTR/COR SHALL BE TAKEN TO THE BIA PUEBLO PINTADO MAINTENANCE YARD (LOCATED 800 m EAST OF THE BOP). ANY MATERIALS DETERMINED TO BE UNUSABLE BY THE COR/AOTR SHALL BE DISPOSED OF BY THE CONTRACTOR IN ACCORDANCE WITH SECTIONS 107, AND 203 OF THE FP-03. THIS SALVAGE WORK SHALL BE INCLUDED IN THE APPROPRIATE UNIT PRICE FOR BID ITEMS 20304-1000 AND 60701-1000.

17. THE ROADWAY TYPICAL SECTION SHOWN IS THE BASIC TEMPLATE TO WHICH THE PROJECT IS TO BE STAKED AND BUILT. HOWEVER, THERE WILL BE LOCATIONS WHERE, DUE TO EXISTING GROUND CONDITIONS, TURNOUTS, CULVERTS OR OTHER STRUCTURES, ETC., THE SHOWN TYPICAL SECTION BACK AND FORE SLOPES CANNOT BE CONSTRUCTED. IN THIS CASE THE NRO-DOT PLANNING AND DESIGN BRANCH CHIEF, SHALL BE CONSULTED THROUGH THE COR/AOTR, FOR CHANGES IN THE TYPICAL SECTIONS AND/OR APPROVED PROFILES BEFORE PROCEEDING WITH THE WORK, UNLESS OTHERWISE NOTED ON THE PLANS. THE FINAL CONSTRUCTED ROAD SECTION SHALL BE BASED ON THE GOVERNMENT FURNISHED COMPUTERIZED STAKING NOTES AS ADJUSTED TO FIT FIELD CONDITIONS. THE CONTRACTOR SHALL STAY WITHIN THE LIMITS OF CONSTRUCTION, UNLESS OTHERWISE APPROVED. IN NO CASE SHALL THE CUT AND FILL BACK SLOPES BE BUILT STEEPER THAN THE MAXIMUM ALLOWED IN THE ROADWAY TYPICAL SECTION SHOWN.

18. ANY EXISTING OR NEW ROADSIDE FEATURES OR OTHER IMPROVEMENTS NEGLIGENTLY DAMAGED BY THE CONTRACTOR DURING CONSTRUCTION SHALL BE RESTORED OR REPLACED TO EQUAL OR BETTER CONDITION AT THE CONTRACTOR'S EXPENSE.

19. THE CONTRACTOR SHALL REMOVE EXISTING ROADSIDE SIGNS THAT INTERFERE WITH ROAD CONSTRUCTION AND/OR CONTRADICT THE CONTRACTOR'S TEMPORARY TRAFFIC CONTROL PLAN AT THE START OF CONSTRUCTION. THE CONTRACTOR SHALL NOTIFY THE COR/AOTR AT LEAST THREE (3) WORKING DAYS IN ADVANCE OF SUCH SIGN REMOVAL. ALL SALVAGEABLE SIGNS/POSTS, AS DETERMINED BY THE COR/AOTR, SHALL BE DELIVERED TO THE BIA PUEBLO PINTADO MAINTENANCE YARD. THE REMAINING SIGNS SHALL BE DISPOSED OF BY THE CONTRACTOR IN ACCORDANCE WITH SECTION 203 OF THE FP-03. SIGNS NEEDED FOR SAFETY AND/OR INFORMATION SHALL BE TEMPORARILY RESET AS DIRECTED BY THE COR/AOTR. THIS WORK SHALL BE CONSIDERED AN INCIDENTAL OBLIGATION OF THE CONTRACTOR.

20. GRADE AND SHAPE THE NEW SHOULDER (AS DIRECTED BY THE COR/AOTR) FROM THE NEW SUBGRADE HINGE POINTS TO AND INCLUDING THE EXISTING DITCH LINE AREAS FOR THE CONSTRUCTION OF DITCH LININGS, SLOPE PROTECTION, AND RIPRAP RUNDOWNS. THIS WORK SHALL BE INCIDENTAL TO THE UNIT PRICE BID FOR THE RIPRAP ITEMS SHOWN IN THE BID SCHEDULE.

21. ALL RIGHT-OF-WAY REFERENCE MARKERS SHALL BE LABELED IN THE METRIC UNITS OF MEASURE. ALL NEW BRASS CAPS SHALL BE STAMPED WITH BOTH ALIGNMENT STATIONING AND ELEVATIONS IN METRIC. THIS WORK SHALL BE INCIDENTAL TO THE UNIT PRICE BID FOR ITEMS 62101-0000 AND 62102-0000.

22. THERE IS ONE (1) ARCHAEOLOGICAL SITE MITIGATION NOTED ON THE PLANS. THE CONTRACTOR SHALL NOTIFY THE NAVAJO NATION HISTORIC PRESERVATION DEPARTMENT (NNHPD) PRIOR TO STARTING CONSTRUCTION ACTIVITY. SEE THE SPECIAL CONTRACT REQUIREMENT SECTION OF THE CONTRACT FOR ADDITIONAL INFORMATION AND REQUIREMENTS.

23. GEOTECHNICAL REPORT(S) FOR THIS PROJECT WILL BE PROVIDED UPON WRITTEN REQUEST TO THE CO/AO.

24. AT THE COMPLETION OF THE CONSTRUCTION, THE CONTRACTOR SHALL INSPECT ALL NEWLY INSTALLED CULVERTS, CATTLE GUARDS, AND EXISTING DRAINAGE STRUCTURES. THESE STRUCTURES SHALL BE MAINTAINED IN A CLEAN CONDITION, FREE OF SILT AND OTHER DEBRIS UNTIL FINAL ACCEPTANCE OF THE PROJECT. THIS WORK SHALL BE CONSIDERED AN INCIDENTAL OBLIGATIONS OF THE CONTRACTOR UNDER THE APPROPRIATE BID ITEMS FOR SECTIONS 602, 607 AND 619.

25. THE CONTRACTOR SHALL BE REQUIRED TO OBLITERATE ALL ABANDONED TURNOUTS AND ROADWAYS OUTSIDE OF THE CUT/FILL LIMITS AND WITHIN THE RIGHT-OF-WAY LIMITS PER THE FP-03, SECTION 211, METHOD 2. OBLITERATION SHALL BE PAID UNDER BID ITEM 21101-2000. SEEDING WILL BE PAID UNDER BID ITEM 62510-1000.

26. REMOVAL AND RE-ATTACHMENT OF FENCING AT ALL MAJOR DRAINAGE STRUCTURES, CATTLE GUARDS, GATES, ETC., SHALL BE CONSIDERED INCIDENTAL OBLIGATIONS OF THE CONTRACTOR UNDER ITEMS OF WORK REQUIRING REMOVAL, REPLACEMENT, AND/OR MODIFICATION OF EXISTING STRUCTURES, INSTALLATION OF NEW CATTLE GUARDS, GATES AND/OR TIE-INS TO EXISTING FENCES. ALL FENCING REPAIRS, TEMPORARY FENCING AND/OR REPLACEMENT SHALL BE COMPLETED AS SOON AS POSSIBLE IN THE SAME WORK DAY SO AS NOT TO ALLOW LIVESTOCK INTO THE PROJECT LIMITS.

27. THE CONTRACTOR IS REQUIRED TO SUBMIT A REVISED PIPE LIST, BASED ON FIELD STAKING IN ACCORDANCE WITH SECTION 152 OF THE CONTRACT SUPPLEMENTAL SPECIFICATIONS. THE APPROVAL OF ANY AND ALL REVISED PIPE LISTS WITH ACCOMPANYING DRAWINGS IS RENDERED AS A SERVICE ONLY AND IS NOT CONSIDERED A GUARANTEE OF MEASUREMENTS, QUANTITIES, INSTALLATION PROCEDURES, AND/OR DIMENSIONS, NOR SHALL IT BE CONSIDERED AS RELIEVING THE CONTRACTOR FROM COMPLYING WITH THE CONTRACT SPECIFICATION AND DESIGN PLANS. THE CONTRACTOR IS HEREBY NOTIFIED THAT UNDER NO CIRCUMSTANCE SHALL ANY DRAINAGE STRUCTURE(S) BE INSTALLED BELOW THE NATURAL FLOW LINE OF THE WASH, ARROYO, OR DITCH LINE.

28. ROADWAY AND PIPE CROSS SECTIONS WILL BE PROVIDED IN EITHER HARD COPY OR ELECTRONIC FORMAT UPON WRITTEN REQUEST TO THE CO/AO.

29. ANY EXISTING MAIL BOXES, ADVERTISING BILLBOARDS, OR HOUSE ADDRESS SIGNS LOCATED ALONG THE ROADWAY PRISM SHALL BE REMOVED AND RE-INSTALLED OUTSIDE OF THE RIGHT-OF-WAY LIMITS OR AS DIRECTED BY THE COR/AOTR. THIS WORK SHALL BE INCIDENTAL TO BID ITEM 20304-1000.

30. THE CONTRACTOR SHALL REMOVE THE EXISTING CULVERTS IN CHACO WASH AFTER ALL USE AS A DETOUR OR CONSTRUCTION ACCESS IS COMPLETED. SALVAGEABLE MATERIAL SHALL BE HANDLED IN ACCORDANCE WITH GENERAL NOTE #16. THE EXISTING CHACO WASH CROSSING AREA SHALL BE RE-GRADED TO MATCH THE ORIGINAL CHANNEL SHAPE AS MUCH AS POSSIBLE, AND AS DIRECTED BY THE COR/AOTR. ALL DISTURBED AREAS, INCLUDING ANY CONSTRUCTION ACCESS ROADS ARE TO BE SEEDED AFTER USE. THIS WORK SHALL BE INCLUDED IN THE APPROPRIATE UNIT PRICE BID FOR ITEMS 20304-1000 AND 60701-1000.

31. ALL GEOMETRY DATA SHOWN ON THESE PLANS ARE IN STATE PLANE GROUND COORDINATES.

BASIS OF ESTIMATED QUANTITIES

ITEM NO.	DESCRIPTION	GRADE	UNITS	APPLICATION
30101-2000	Untreated Aggregate Base Course (ABC)	"D"	2268 kg/m³	Main Roadway & Turnouts: 125 mm
40201-0500	Hot Asphalt Concrete Pavement, Class "B"	"B"	2430 kg/m³	Main Roadway & Turnouts: 76 mm (1-76 mm Lift)
40502-1200	Asphalt Binder	⚠ PG 64-22	0.9806 L/kg	6.0% By Weight of Total Mix
41101-5000	Prime Coat	MC-70	1056 L/t	1.36 L/m², Apply on Top of ABC

UNITED STATES
DEPARTMENT OF THE INTERIOR
BUREAU OF INDIAN AFFAIRS
NAVAJO REGION OFFICE * DIVISION OF TRANSPORTATION

TYPICAL ROADWAY SECTIONS & GENERAL NOTES

Designed by: RDL
Drawn by: ASCG,rsh,cdh Date: 11/23/09
⚠ Revised by: cdh Date: 05/17/10
File Name: N46-Typical & Notes

REGION	STATE	RESERVATION	ROUTE	PROJECT NO.	SHEET	TOTAL SHEETS
NAVAJO	NEW MEXICO	NAVAJO	N46	N46(1)1,2&4	3	58

PROJECT ESTIMATED QUANTITIES

ITEM	DESCRIPTION	N46(1) QUANTITY	N9(13) QUANTITY	UNIT	N46(1) AS-BUILT	N9(13) AS-BUILT
10901-0000	Extra & Miscellaneous Work Authorized under Section 109.02(m)	All Req'd		L.S.		
15101-0000	Mobilization	All Req'd		L.S.		
15201-0000	Construction Survey and Staking	All Req'd		L.S.		
15301-0020	Contractor Quality Control	7,000	1,275	Man Hr		
15701-0000	Soil Erosion Control	All Req'd		L.S.		
15708-1000	Soil Erosion Control, Temporary Straw Mulching	6.5	0.18	ha		
20102-0000	Clearing and Grubbing	All Req'd		L.S.		
20304-1000	Removal of Structures and Obstructions	All Req'd		L.S.		
20401-0000	Roadway Excavation	53,984	1,514	m^3		
20425-2000	Ditch, Excavation, Furrow Ditch	244		m		
20443-2000	Earthen Berm, Type B, Ditch Block	8		m		
20601-0000	Development of Water Supply	17	0.30	M-Liter		
21101-2000	Roadway Obliteration, Method 2	2,130		m^2		
25101-2000	Placed Riprap, Class 2	460		m^3		
25112-2000	Wire Enclosed Riprap, Class 2	1,173		m^3		
30101-2000	Aggregate Base, Grading D	11,721	2,061	t		
40201-0500	Hot Asphalt Concrete Pavement, Marshall Test Class B, Grade B	7,415	965	t		
40502-1200	Asphalt Binder PG 64-22 △1	414	58	t		
41101-5000	Prime Coat, Grade MC-70	52	6	t		
41201-1000	Asphalt Tack Coat, Grade SS-1, Emulsified Cement		1	t		
55101-1800	HP 360 x 108 Steel Piles, In Place	307		m		
55115-1000	Preboring	194		m		
55120-0000	HP 360 x 108 Steel Test Piles, In Place	71		m		
55201-0200	Structural Concrete Class A(AE), 27.6 MPa	△1 331		m^3		
55401-1000	Reinforcing Steel, Grade 420	10,212		Kg		
55401-2000	Epoxy Coated Reinforcing Steel, Grade 420	31,540		Kg		
55502-0000	Structural Steel, Bolts, Steel Diaphragm and Misc. Steel Plates Furnished, Fabricated, and Erected	81,625		Kg		
55601-0900	Steel Bridge Rail	118		m		
56302-2000	Painting HP 360 x 108 Steel Piles	△1 12		m^2		
60201-0810	610 millimeter Pipe Culvert	46		m		
60201-0910	762 millimeter Pipe Culvert	24		m		
60202-0510	711 millimeter Span, 508 millimeter Rise Pipe Arch Culvert	123		m		
60202-0610	889 millimeter Span, 610 millimeter Rise Pipe Arch Culvert	40		m		
60202-0710	1067 millimeter Span, 737 millimeter Rise Pipe Arch Culvert	46		m		
60210-0810	End Section for 610 millimeter Pipe Culvert	3		Each		
60210-0910	End Section for 762 millimeter Pipe Culvert	1		Each		
60211-0910	End Section for 711 millimeter Span, 508 millimeter Rise Pipe Arch Culvert	12		Each		
60211-1010	End Section for 889 millimeter Span, 610 millimeter Rise Pipe Arch Culvert	1		Each		
60211-1110	End Section for 1067 millimeter Span, 737 millimeter Rise Pipe Arch Culvert	2		Each		
60701-1000	Removing, Cleaning, and Stockpiling Culvert	145		m		
61501-0100	Sidewalk, Concrete 100 mm Depth, 1.5 m Wide	184		m^2		
61701-5000	Guardrail System SGR-04b, Type PDE 02 w/ET-PLUS End Treatment	99		m		
61901-1000	Fence, Barbed Wire, 5 Strand	6794		m		
61901-1300	Pedestrian Fencing, Chain Link	114		m		
61903-0310	Cattle guard, 4900 mm with Type II gate	5		Each		
61903-0710	Cattle guard, 7190 mm with Type II gate	2		Each		
61903-1210	Cattle guard, 11770 mm with Type II gate	1		Each		
62101-0000	ROW Monument	58		Each		
62102-0000	Reference Marker	57		Each		
62510-1000	Seeding, Dry Method	6.5	0.18	ha		
62901-1100	Rolled Erosion Control Product, Type 4	937		m^2		
63302-0001	Sign Installation, 1 Post and hardware: 2.98 kg/m	0.56		m^2		
63302-0003	Sign Installation, 1 Post and hardware: 4.10 kg/m	4.18	4.14	m^2		
63302-0010	Sign Installation, 2 Posts and hardware: 2.98 kg/m	15.09	2.28	m^2		
63302-0012	Sign Installation, 2 Posts and hardware: 4.10 kg/m	7.39		m^2		
63308-2000	Object Markers, Flexible, Type 2	8	4	Each		
63308-3000	Object Markers, Type 3 with 1 Post and Hardware: 2.98 kg/m	4		Each		
63309-0020	Delineators, Glass Fiber, Type 1b	64		Each		
63401-1510	Pavement Markings, Type "H", Solid Yellow	3,770	1,462	m		
63401-1520	Pavement Markings, Type "H", Solid White	6,888	810	m		
63401-1610	Pavement Markings, Type "H", Broken Yellow	1,706		m		
63405-2900	Pavement Markings, Type "H", Turn Arrow		4	Each		
63405-2950	Pavement Markings, Type "H", Straight Arrow		4	Each		
63405-3050	Pavement Markings, Type "H", Word "ONLY"		4	Each		
63405-3280	Pavement Markings, "Stop Bar", Type "H", Solid White	5		Each		
63501-0000	Temporary Traffic Control	All Req'd		L.S.		
63502-3000	Temporary Traffic Control, Raised Pavement Markers		288	Each		
63506-0500	Temporary Traffic Control, Flagger	11,500	1,466	Man Hr		
63801-0000	Herbicide Application, Type: Glyphosate (Roundup®)	All Req'd		L.S.		

NOTE: SEE SHEET 11, 12, 13 AND 14 FOR N9(13)2&4 QUANTITIES AND WIDENING AND ACCEL/DECEL LANE DETAILS.

ITEM 20304-1000 REMOVAL OF STRUCTURES AND OBSTRUCTIONS

STATION	LOCATION	REMARKS
0+023.395	Lt.,℄,Rt.	Remove existing 4 unit cattle guard; ±52 m of existing fence and gate.
0+004.111 to 0+276.200	℄	Remove existing road surfacing, may use as embankment if suitable.
0+648 to 0+684	Rt.	Remove existing airport runway fencing.
1+000±	Lt.	Remove existing crossing (abandoned and in-use culverts; embankment; barriers).

ITEM 20401-000 EARTHWORK QUANTITIES - N46(1) ONLY

	STATION TO STATION	CUT (m^3)	FILL (m^3)	WASTE (m^3)	BORROW (m^3)
	N46(1)1,2&4				
** MAINLINE	0+004.111 (BOP) to 0+717.247	8,392	8,392		
	0+717.247 to 1+017.060 (BOB)	0	16,958		
	1+067.440 (EOB) to 2+033.054	14,718	14,718		
	2+033.054 TO 2+476.636	6,321	6,321		
	2+476.636 TO 2+669.860	959	959		
	2+669.860 TO 3+635.000 (EOP)	19,093	2,109		
** CHANNEL AND TURNOUTS	Channel Earthwork @ Bridge	3,605	1,441		
	Turnout, Sta. 0+220.000, Lt.	27	414		
	Turnout, Sta. 0+604.000, Lt.	0	200		
	Turnout, Sta. 1+117.900, Lt.	3	1,722		
	Turnout, Sta. 1+413.500, Rt.	0	50		
	Turnout, Sta. 2+218.000, Lt	72	53		
	Turnout, Sta. 2+370.800, Rt	6	351		
	Turnout, Sta. 2+747.370, Rt.	235	111		
	Turnout, Sta. 2+999.200, Rt.	153	42		
	Turnout, Sta. 3+021.300, Lt	399	0		
	TOTAL EARTHWORK	53,983	53,841	142	0

A 25% Shrinkage Factor was applied to the Fill quantities.
N9(13)2&4 Earthwork table shown on Sheet 11.
** - Mainline earthwork quantities and balance points do not include channel and turnout earthwork quantities. Balance point stations indicated in Mainline earthwork table may differ when channel and turnout earthwork quantities are considered.

ITEM 25101-2000 PLACED RIPRAP CLASS 2
ITEM 25112-2000 WIRE ENCLOSED RIPRAP, CLASS 2

LOCATION		PLACED RIPRAP (m^3)	WIRE ENCLOSED RIPRAP (m^3)
0+980.000 to 1+013.470 Lt.	Downdrain		62
1+013.000 to 1+037.580 Rt.	Downdrain		37
1+047.095 to 1+101.230 Lt.	Downdrain		90
1+068.970 to 1+105.000 Rt.	Downdrain		60
Abutment #1	Slope Protection		555
Abutment #2	Slope Protection		290
0+041 to 0+400 Rt.	Check Dams	69	
1+452 Lt.	Backslope Protection		19
1+500 Lt.	Backslope Protection		20
1+512 Lt.	Backslope Protection		15
1+525 Lt.	Backslope Protection		25
1+755 to 1+950 Rt.	Riprap Lined Ditch	316	
2+380 Rt.	At Turnout	75	
TOTAL		460	1,173

ITEM 30101-2000 AGGREGATE BASE, GRADING D

LOCATION	VOLUME (m^3)	WEIGHT (t)
0+004.111 to 1+012.469 (SS)	1,390.7	3,121
1+072.031 (SS) to 3+635.000	3,519.3	7,897
N7128	90.6	203
Turnouts	222.7	500
TOTAL	5,223.3	11,721

SS = Edge of Sleeper Slab towards roadway.

ITEM 40201-0500 HOT ASPHALT CONCRETE PAVEMENT, MARSHALL TEST CLASS B, GRADE B

LOCATION	VOLUME (m^3)	WEIGHT (t)
0+004.111 to 1+012.469 (SS)	834.4	2,006
1+072.031 (SS) to 3+602.560	2,091.8	5,029
N7128	126.4	304
Turnouts	31.7	76
TOTAL	3,084.3	7,415

SS = Edge of Sleeper Slab towards roadway.

ITEM 60701-5000 REMOVING, CLEANING & STOCKPILING CULVERT

LOCATION	SIZE (m)	REMOVE AND SALVAGE
0+498.200 ℄	1-760 mm x 13.7 m	Existing CSPC
0+620.100 ℄	1-914 mm x 12.1 m	Existing CSPC
1+013.890 Lt.	1-2134 mm x 18.3 m	Existing CSPC
1+020.720 Lt.	1-2134 mm x 18.4 m	Existing CSPC
1+027.850 Lt.	1-2134 mm x 18.5 m	Existing CSPC
1+269.825 ℄	1-914 mm x 12.2 m	Existing CSPC
1+710.000 ℄	1-760 mm x 12.2 m	Existing CSPC
2+370.800 Rt.	1-380 mm x 9.0 m	Existing ABS pipe; School TO
2+747.370 Rt.	1-380 mm x 30.6 m	Existing ABS pipe; School TO
TOTAL:	145.0 m	

ITEM 61701-5000 GUARDRAIL SYSTEM SGR-04b, TYPE PDE 02 w/ET-PLUS END TREATMENT

STATION	LOCATION	LENGTH (m)
0+985.140 to 1+015.620	RT	30.480
0+990.774 to 1+009.824	LT	19.050
1+068.880 to 1+099.360	LT	30.480
1+074.766 to 1+093.816	RT	19.050
	TOTAL	99.060

ITEM 61901-1000 FENCE, BARBED WIRE, 5 STRAND

STATION TO STATION	LOCATION	LENGTH	REMARKS
0+023.395 to 1+017.060	30 m Lt.; 30 m Rt.	1987.330	BOP to Bridge Abutment 1
1+067.440 to 2+211.969	30 m Lt.; 30 m Rt.	2289.058	Bridge Abutment 2 to ROW width change
2+211.969 to 2+246.800	30 m Lt.; 21 m Rt.	69.662	ROW width change to west corner, school fence
2+246.800 to 2+773.400	30 m Lt. ONLY	526.600	West corner to east corner, school fence tie-in
2+773.400 to 2+940.000	30 m Lt.; 21 m Rt.	333.200	East corner, school fence tie-in to ROW width change
2+940.000 to 3+300.000	30 m Lt.; 18 m Rt.	720.000	ROW width change to ROW width change
3+300.000 to 3+603.779	30 m Lt.; 15 m Rt.	607.558	ROW width change to cattleguard at EOP
SUB-TOTAL =		6533.408	
deduct 4900 mm cattleguards w/ gate (5 ea.)		-41.750	(= 5 x 8.350 m per turnout)
deduct 7190 mm cattleguards w/ gate (2 ea.)		-21.280	(= 2 x 10.640 m per turnout)
SUB-TOTAL =		6470.378	
add 5% contingency factor		323.519	(terrain condition; lengths perpendicular to CL; wing fences
TOTAL =		6793.897	

ITEM 61903-0310 CATTLEGUARD 4900 mm (2-UNIT) W/TYPE II GATE

STATION	LOCATION	TURNOUT SIZE	REMARKS
0+604.000	Lt.	4.50 m x 25.2 m	Sewer lagoon access
1+413.500	Rt.	4.50 m x 19.7 m	Local access
2+218.000	Lt.	4.50 m x 27.0 m	Residences to west
2+999.200	Rt.	4.50 m x 25.7 m	Residences to south
3+021.300	Lt.	4.50 m x 25.2 m	Residences to north
TOTAL . . . . . 5 each			

ITEM 61903-0710 CATTLEGUARD 7190 mm (3-UNIT) W/TYPE II GATE

STATION	LOCATION	TURNOUT SIZE	REMARKS
0+220.000	Lt.	7.00 m x 45.2 m	Pueblo Pintado School
1+117.900	Lt.	7.00 m x 83.4 m	BIA Route N7128
TOTAL . . . . . 2 each			

ITEM 61903-1210 CATTLEGUARD 11770 mm (5-UNIT) W/TYPE II GATE

STATION	LOCATION	TURNOUT SIZE	REMARKS
3+603.779	℄	n/a	Across mainline road
TOTAL . . . . . 1 each			

NOTE: SEE SHEET 5 FOR INFORMATION ON ADDRESSING EXISTING UTILITIES.

△1 - Quantities revised per Facsimile correspondence dated March 25, 2010 from the AO to NECA.

ITEM 62101-0000 MONUMENT
ITEM 62102-0000 MARKER

STATION	DESCRIPTION	LOCATION	MONUMENT	MARKER
0+016.789	Begin ROW	30m Rt.	1	1
0+029.894	Begin ROW	30m Lt.	1	1
0+130.893	PC C1	30m Lt., 30m Rt.	2	2
0+205.000	POC	30m Lt., 55m Lt.	2	2
0+235.000	POC	30m Lt., 55m Lt.	2	2
0+275.996	PT C1	30m Lt., 30m Rt.	2	2
0+422.742	PC C2	30m Lt., 30m Rt.	2	2
0+590.022	PT C2	30m Lt., 30m Rt.	2	2
0+916.316	PC C3	30m Lt., 30m Rt.	2	2
0+976.449	PT C3	50m Lt., 30m Lt., 30m Rt., 50m Rt.	4	4
1+105.000	POT	90m Lt., 50m Lt.	2	2
1+128.360	PC C4	90m Lt., 30m Rt., 50m Rt.	3	3
1+140.000	POC	*90m Lt., 30m Lt.	2	*1
1+259.979	PT C4	30m Lt., 30m Rt.	2	2
1+746.047	PC C5	30m Lt., 30m Rt.	2	2
1+870.084	PT C5	30m Lt., 30m Rt.	2	2
1+972.104	PC C6	30m Lt., 30m Rt.	2	2
2+091.085	PT C6	30m Lt., 30m Rt.	2	2
2+211.969	PC C7	30m Lt., 21m Rt., 30m Rt.	3	3
2+609.032	PT C7	30m Lt., 21m Rt.	2	2
2+940.000	POC	18m Rt., 21m Rt.	2	2
2+985.000	POC	18m Rt., 33m Rt.	2	2
3+010.000	POC	18m Rt., 33m Rt.	2	2
3+300.000	POC	15m Rt., 18m Rt.	2	2
3+461.305	PC C8	30m Lt., 15m Rt.	2	2
3+578.273	PT C8	30m Lt., 15m Rt.	2	2
3+600.000	POC	12m Rt., 15m Rt.	2	2
3+635.000	End ROW	30m Lt., 12m Rt.	2	2
		TOTAL:	58	57

* Sta. 1+140.000, 90m Lt. - bury ROW Monument 300 mm below ground/roadway surface; do not install ROW Marker. See Sheet 50.

ITEM 63308-2000 OBJECT MARKERS, TYPE 2

STATION	DESCRIPTION	LOCATION	EACH
0+510.000	Pipe Loc.	Inlet & Outlet	2
0+619.000	Pipe Loc.	Inlet & Outlet	2
1+270.000	Pipe Loc.	Inlet & Outlet	2
1+773.800	Pipe Loc.	Inlet & Outlet	2
		TOTAL:	8

ITEM 63801-0000 HERBICIDE APPLICATION, TYPE: GLYPHOSATE (ROUNDUP®)

STATION TO STATION	LT. (m)	RT. (m)	AREA (m^2)	REMARKS
1+252.0 to 2+211.969	30	30	57598	Apply herbicide immediately before Halogeton bloom. Notify COR/AOTR.
2+211.969 to 2+270.0	30	21	2960	
minus HACP and ABC surfacing area				
1+252.0 to 2+270.0	6.165	6.165	-12552	
TOTAL HERBICIDE APPLICATION AREA =			48006	

UNITED STATES
DEPARTMENT OF THE INTERIOR
BUREAU OF INDIAN AFFAIRS
NAVAJO REGION OFFICE * DIVISION OF TRANSPORTATION

SUMMARY OF QUANTITIES AND TABLES

Designed by: RDL
Drawn by: RDL,rsh,cdh,dc Date: 01/07/10
Revised by: cdh Date: 05/17/10
File Name: N46-Quantities_fence.dwg

REGION	STATE	RESERVATION	ROUTE	PROJECT NO.	SHEET	TOTAL SHEETS
NAVAJO	NEW MEXICO	NAVAJO	N46	N46(1)1,2&4	4	58

NOTE: SEE SHEET 11, 12, 13 AND 14 FOR N9(13)2&4 FOR SIGNING DETAILS AND WIDENING AND ACCEL/DECEL LANE WORK.

ITEMS 63302-0001 SIGN INSTALLATION, 1 POST AND HARDWARE: 2.98 kg/m

STATION	LOC.	SIGN DETAIL NO.	DESCRIPTION	SIGN PANEL SIZE (mm)	AREA OF SIGN (m^2)	NO. of POSTS	kg/m	TOTAL NO. SIGN PANELS
0+050.000	Rt.	Route 46	46 / 7128	457 x 610	0.28	1	2.98	1
4+050.000 N7128	Rt.	Route 7128				1		1
63302-0001: Sign Installation, 1 POST AND HARDWARE; 2.98 kg/m ..... TOTAL 0.56 m^2								

NOTE: SEE SHEET 5 FOR NAVAJO REGION ROUTE SIGN DIMENSIONS AND DETAILS.

ITEMS 63302-0003 SIGN INSTALLATION, 1 POST AND HARDWARE: 4.10 kg/m

0+080.000	Rt.	R2-1	SPEED LIMIT 30	610 x 762	0.46	1	4.10	1
3+540.000	Lt.					1		1
0+300.000	Lt.	R4-1	DO NOT PASS	610 x 762	0.46	1	4.10	1
0+860.000	Rt.					1		1
1+320.000	Lt.					1		1
1+700.000	Rt.					1		1
2+840.000	Lt.					1		1
2+367.000	Rt.	N/A	SERVICE VEHICLES ONLY	610 x 762	0.46	1	4.10	1
2+381.200	Rt.					1		1
63302-0003: Sign Installation, 1 POST AND HARDWARE; 4.10 kg/m ..... TOTAL 4.18 m^2								

ITEMS 63302-0010 SIGN INSTALLATION, 2 POSTS AND HARDWARE: 2.98 kg/m

0+015.400	Lt.	R1-1	STOP	914 x 914	0.84	2	2.98	1
0+206.100	Lt.	R1-1		762 x 762	0.58	2		1
1+107.500	Lt.					2		1
2+378.200	Rt.					2		1
2+754.800	Rt.					2		1
0+100.000	Rt.	W1-10(R)		762 x 762	0.58	2	2.98	1
0+770.000	Rt.	W1-4(L)		762 x 762	0.58	2	2.98	1
1+400.000	Lt.					2		1
0+300.000	Rt.	W14-3	NO PASSING ZONE	914 x 1219 x 1219	0.56	2	2.98	1
0+860.000	Lt.					2		1
1+320.000	Rt.					2		1
1+700.000	Lt.					2		1
2+840.000	Rt.					2		1
1+120.000	Rt.	D1-1	COUNSELOR RD	2610 x 457	1.19	2	2.98	2
		Install 2 Sign Panels Back to Back on Posts. Sign panel shown is for northbound traffic. For southbound traffic place arrow on the opposite side of the text, pointing right.						
1+590.000	Rt.	W1-5(L)		762 x 762	0.58	2	2.98	1
2+640.000	Lt.	W1-5(R)				2		1
3+148.000	Rt.	W8-3 W16-2	PAVEMENT ENDS 1500 FT	762 x 762 610 x 305	0.58 0.19	2	2.98	1 1
3+455.000	Rt.	W8-3 W16-2	PAVEMENT ENDS 500 FT	762 x 762 610 x 305	0.58 0.19	2	2.98	1 1
3+600.000	Rt.	W8-3	PAVEMENT ENDS	762 x 762	0.58	2	2.98	1
0+100.000	Lt.	W3-1		762 x 762	0.58	2	2.98	1
4+100.000 N7128						2		1
4+145.000 N7128	Lt.	W1-9L(15)	15	762 x 762	0.58	2	2.98	1
63302-0010: Sign Installation, 2 POSTS AND HARDWARE; 2.95 kg/m ..... TOTAL 15.09 m^2								

ITEMS 63302-0012 SIGN INSTALLATION, 2 POSTS AND HARDWARE: 4.10 kg/m

STATION	LOC.	SIGN DETAIL NO.	DESCRIPTION	SIGN PANEL SIZE (mm)	AREA OF SIGN (m^2)	NO. of POSTS	kg/m	TOTAL NO. SIGN PANELS
1+110.000 *	Rt.	D1-3 *	CHACO CULTURE NHP ← 33 MILES	1765 x 877	1.55	2	4.10	1
2+160.000	Rt.	S1-1 W16-9p	AHEAD	914 x 914	0.84	2	4.10	2
2+900.000	Lt.			914 x 508	0.46	2		2
2+700.000	Rt.	D1-1	TSE' YI' GAI HIGH SCHOOL →	2120 x 762	1.62	2	4.10	1
2+780.000	Lt.	D1-1	← TSE' YI' GAI HIGH SCHOOL			2		1
63302-0012: Sign Installation, 2-POSTS AND HARDWARE, 4.10 kg/m ..... TOTAL 7.39 m^2								

* – See details for Chaco Culture NHP sign on Sheet 5.

ITEMS 63308-3000 OBJECT MARKERS, TYPE 3 w/ 1 POST AND HARDWARE: 2.98 kg/m

STATION	LOC.	SIGN DETAIL NO.	DESCRIPTION	SIGN PANEL SIZE (mm)	AREA OF SIGN (m^2)	NO. of POSTS	kg/m	TOTAL NO. SIGN PANELS
1+009.500	Lt.	OM-3L	Opposing Traffic / Oncoming Traffic; OM-3L OM-3R	305 x 914	0.28	1	2.98	1
1+015.300	Rt.	OM-3R				1		1
1+069.200	Lt.	OM-3L				1		1
1+075.000	Rt.	OM-3R				1		1
63302-3000: Object Markers, Type 3 with 1 POST AND HARDWARE, 2.98 kg/m ..... TOTAL 4 each								

ITEM 20425-2000 DITCH, EXCAVATION, FURROW DITCH

STATION	LOCATION	LENGTH(m)
0+750	Lt.	37
0+850	Lt.	31
2+030	Lt.	25
2+933	Rt.	58
3+355	Lt.	51
3+540	Lt.	42
	TOTAL:	244

ITEM 20443-2000 EARTHEN BERM, TYPE B, DITCH BLOCK

STATION	LOCATION	LENGTH(m)
Sta 1+780	Lt	8
	TOTAL:	8

ITEM 21101-2000 ROADWAY OBLITERATION, METHOD 2

STATION	AREA (m^2)
0+904 to 1+111 Lt.	1,900
1+122 to 1+156 Lt.	230
TOTAL	2,130

ITEM 62901-1100 ROLLED EROSION CONTROL PRODUCT, TYPE IV

STATION	LOCATION	AREA(m^2)
2+940 to 2+990±	Rt.	405
3+260 to 3+340	Rt.	532
	TOTAL:	937

ITEM 63401-1510 PAVEMENT MARKINGS, TYPE "H", SOLID YELLOW

STATION TO STATION	LOCATION	DESCRIPTION	LENGTH(m)
0+015.400 To 0+300.000	CL	Solid Double Yellow	569.4 *
0+860.000 To 1+320.000	CL	Solid Double Yellow	920.2 *
1+700.000 To 2+840.000	CL	Solid Double Yellow	2,280.2 *
		TOTAL:	3,769.8 *

TURNOUT LOCATIONS

STATION	LOCATION	SIZE (m)	REMARKS
0+220.000	Lt.	7.0 x 48.7	Saw Cut @ 48.7 m Lt.; Remove Existing Asphalt Turnout; Surface to saw cut.
0+604.000	Lt.	4.5 x 25.2	Pave to new Cattle Guard
1+117.900	Lt.	7.0 x 90.2	Construct New intersection with N7128. See Sht 38 For Details.
1+413.500	Rt.	4.5 x 26.8	Pave to new Cattle Guard
2+218.000	Lt.	4.5 x 26.8	Pave to new Cattle Guard
2+370.800	Rt.	9.1 x 24.8	Pave to Existing Cattle Guard @ existing school turnout
2+747.370	Rt.	9.1 x 38.0	Pave to Existing Cattle Guard @ existing school turnout
2+999.200	Rt.	4.5 x 25.6	Pave to new Cattle Guard
3+021.300	Lt.	4.5 x 25.2	Pave to new Cattle Guard

ITEM 63401-1520 PAVEMENT MARKINGS, TYPE "H", SOLID WHITE

STATION TO STATION	LOCATION	DESCRIPTION	LENGTH(m)
0+004.111 to 3+602.560	Rt.	Solid White	3,598.5 *
Minus (2) 9.10 m T.O. @ 37.272 m each			−74.7 *
Minus (2) 4.50 m T.O. @ 32.672 m each			−65.5 *
		SUB-TOTAL:	3,458.3 *
0+004.111 to 3+602.560	Lt.	Solid White	3,598.5 *
Minus (2) 7.00 m T.O. @ 35.172 m each			−70.4 *
Minus (3) 4.50 m T.O. @ 32.672 m each			−98.5 *
		SUB-TOTAL:	3,429.6 *
		GRAND-TOTAL:	6,887.9 *

ITEM 63401-1610 PAVEMENT MARKINGS, TYPE "H", BROKEN YELLOW

STATION TO STATION	LOCATION	DESCRIPTION	LENGTH(m)
0+300.000 To 0+860.000	CL	Broken Yellow	560.2 *
1+320.000 To 1+700.000	CL	Broken Yellow	380.1 *
2+840.000 To 3+605.000	CL	Broken Yellow	765.0 *
		TOTAL:	1,705.3 *

* – Quantities determined as follows; actual length in meters converted to feet, feet rounded up to the nearest foot, feet converted back to meters, meters rounded to the nearest tenth of a meter.

ITEM 63405-3260 PAVEMENT MARKINGS, "STOP BAR", TYPE "H", SOLID WHITE

STATION	LOCATION	DESCRIPTION	EACH
0+015.400	CL	Stop Bar	1
0+220.000	LT.	Stop Bar	1
1+117.900	LT.	Stop Bar	1
2+370.800	RT.	Stop Bar	1
2+747.370	RT.	Stop Bar	1
		TOTAL:	5

ITEM 63309-0020 DELINEATORS, GLASS FIBER, TYPE "1b"

STATION	DESCRIPTION	LOCATION	EACH
0+075.893	TYPE "1b"	Lt.	1
0+130.893	TYPE "1b"	Lt.	1
0+159.914	TYPE "1b"	Lt.	1
0+186.934	TYPE "1b"	Lt.	1
0+246.975	TYPE "1b"	Lt.	1
0+275.996	TYPE "1b"	Lt.	1
0+331.000	TYPE "1b"	Lt.	1
0+422.742	TYPE "1b"	Lt.	1
0+464.562	TYPE "1b"	Lt.	1
0+506.382	TYPE "1b"	Lt.	1
0+546.202	TYPE "1b"	Lt.	1
0+590.023	TYPE "1b"	Lt.	1
0+672.023	TYPE "1b"	Lt.	1
0+752.317	TYPE "1b"	Rt.	1
0+809.023	TYPE "1b"	Lt.	1
0+843.317	TYPE "1b"	Rt.	1
0+889.317	TYPE "1b"	Rt.	1
0+916.317	TYPE "1b"	Rt.	1
0+931.350	TYPE "1b"	Rt.	1
0+946.383	TYPE "1b"	Rt.	1
0+961.416	TYPE "1b"	Rt.	1
0+976.449	TYPE "1b"	Rt.	1
1+133.885	TYPE "1b"	Lt.	1
1+150.297	TYPE "1b"	Lt.	1
1+172.234	TYPE "1b"	Lt.	1
1+194.170	TYPE "1b"	Lt.	1
1+216.107	TYPE "1b"	Lt.	1
1+238.043	TYPE "1b"	Lt.	1
1+259.980	TYPE "1b"	Lt.	1
1+300.980	TYPE "1b"	Lt.	1
1+369.980	TYPE "1b"	Lt.	1
1+448.046	TYPE "1b"	Rt.	1
1+506.980	TYPE "1b"	Lt.	1
1+600.048	TYPE "1b"	Rt.	1
1+691.048	TYPE "1b"	Rt.	1
1+746.048	TYPE "1b"	Rt.	1
1+777.058	TYPE "1b"	Rt.	1
1+808.067	TYPE "1b"	Rt.	1
1+839.076	TYPE "1b"	Rt.	1
1+870.085	TYPE "1b"	Rt.	1
1+890.105	TYPE "1b"	Lt.	1
1+925.085	TYPE "1b"	Rt.	1
1+972.105	TYPE "1b"	Lt.	1
2+006.800	TYPE "1b"	Lt.	1
2+051.425	TYPE "1b"	Lt.	1
2+091.086	TYPE "1b"	Lt.	1
2+173.086	TYPE "1b"	Lt.	1
2+211.970	TYPE "1b"	Lt.	1
2+268.693	TYPE "1b"	Lt.	1
2+325.416	TYPE "1b"	Lt.	1
2+382.139	TYPE "1b"	Lt.	1
2+436.863	TYPE "1b"	Lt.	1
2+495.586	TYPE "1b"	Lt.	1
2+552.309	TYPE "1b"	Lt.	1
2+609.032	TYPE "1b"	Lt.	1
2+719.032	TYPE "1b"	Lt.	1
2+871.032	TYPE "1b"	Lt.	1
3+030.000	TYPE "1b"	Lt.	1
3+047.305	TYPE "1b"	Rt.	1
3+199.305	TYPE "1b"	Rt.	1
3+351.305	TYPE "1b"	Rt.	1
3+461.305	TYPE "1b"	Rt.	1
3+519.793	TYPE "1b"	Rt.	1
3+578.275	TYPE "1b"	Rt.	1
		GRAND TOTAL:	64

UNITED STATES
DEPARTMENT OF THE INTERIOR
BUREAU OF INDIAN AFFAIRS
NAVAJO REGION OFFICE * DIVISION OF TRANSPORTATION

QUANTITY TABLES

Designed by: RDL
Drawn by: RDL, rsh, cdh Date: 12/01/09
Revised by: Date:
File Name: N46_Quantity Tables.dwg

REGION	STATE	RESERVATION	ROUTE	PROJECT NO.	SHEET	TOTAL SHEETS
NAVAJO	NEW MEXICO	NAVAJO	N46	N46(1)1,2&4	5	58

SUPERELEVATION GRADE TABULATIONS

Alignment : N46
Design Speed : 50 km/h
Normal Crown Slope : −2.00%

C1 Degree : 10°15'34" Radius : 170.220m
Tangent Runout Back : 11.000 Tangent Runout Ahead : 11.000
Runoff Length Back : 28.000 Runoff Length ahead : 28.000
Transition Length Back : 39.000 Transition Length ahead : 39.000
Full Super Rate : 5.060%

Transition Station	Station	%e Left	%e Right
Normal Crown	0+101.133	−2.000%	−2.000%
0% Super	0+112.133	0.000%	−2.000%
Reverse Crown	0+123.200	2.000%	−2.000%
PC 1	0+130.893	3.390%	−3.390%
Full Super	0+140.133	5.060%	−5.060%
Full Super	0+266.756	5.060%	−5.060%
PT 1	0+275.996	3.390%	−3.390%
Reverse Crown	0+283.689	2.000%	−2.000%
0% Super	0+294.756	0.000%	−2.000%
Normal Crown	0+305.756	−2.000%	−2.000%

C2 Degree : 5°20'59" Radius : 326.440m
Tangent Runout Back : 11.000 Tangent Runout Ahead : 11.000
Runoff Length Back : 21.000 Runoff Length ahead : 21.000
Transition Length Back : 32.000 Transition Length ahead : 32.000
Full Super Rate : 3.740%

Transition Station	Station	%e Left	%e Right
Normal Crown	0+397.672	−2.000%	−2.000%
0% Super	0+408.672	0.000%	−2.000%
Reverse Crown	0+419.902	2.000%	−2.000%
PC 2	0+422.742	2.506%	−2.506%
Full Super	0+429.672	3.740%	−3.740%
Full Super	0+583.093	3.740%	−3.740%
PT 2	0+590.023	2.506%	−2.506%
Reverse Crown	0+592.863	2.000%	−2.000%
0% Super	0+604.093	0.000%	−2.000%
Normal Crown	0+615.093	−2.000%	−2.000%

C3 Degree : 19°24'15" Radius : 90.000m
Tangent Runout Back : 11.000 Tangent Runout Ahead : 11.000
Runoff Length Back : 33.000 Runoff Length ahead : 33.000
Transition Length Back : 44.000 Transition Length ahead : 44.000
Full Super Rate : 6.000%

Transition Station	Station	%e Left	%e Right
Normal Crown	0+883.207	−2.000%	−2.000%
0% Super	0+894.207	−2.000%	0.000%
Reverse Crown	0+910.707	−2.000%	2.000%
PC 3	0+916.317	−4.680%	4.680%
Full Super	0+927.207	−6.000%	6.000%
Full Super	0+965.559	−6.000%	6.000%
PT 3	0+976.449	−4.680%	4.680%
Reverse Crown	0+982.059	−2.000%	2.000%
0% Super	0+998.559	−2.000%	0.000%
Normal Crown	1+009.559	−2.000%	−2.000%

C4 Degree : 11°38'33" Radius : 150.000m
Tangent Runout Back : 11.000 Tangent Runout Ahead : 11.000
Runoff Length Back : 29.000 Runoff Length ahead : 29.000
Transition Length Back : 40.000 Transition Length ahead : 40.000
Full Super Rate : 5.300%

Transition Station	Station	%e Left	%e Right
Normal Crown	1+097.931	−2.000%	−2.000%
0% Super	1+108.931	0.000%	−2.000%
Reverse Crown	1+119.874	2.000%	−2.000%
PC 4	1+128.361	3.551%	−3.551%
Full Super	1+137.931	5.300%	−5.300%
Full Super	1+250.410	5.300%	−5.300%
PT 4	1+259.980	3.551%	−3.551%
Reverse Crown	1+268.467	2.000%	−2.000%
0% Super	1+279.410	0.000%	−2.000%
Normal Crown	1+290.410	−2.000%	−2.000%

C5 Degree : 8°22'56" Radius : 208.340m
Tangent Runout Back : 11.000 Tangent Runout Ahead : 11.000
Runoff Length Back : 25.500 Runoff Length ahead : 25.500
Transition Length Back : 36.500 Transition Length ahead : 36.500
Full Super Rate : 4.620%

Transition Station	Station	%e Left	%e Right
Normal Crown	1+717.963	−2.000%	−2.000%
0% Super	1+728.963	−2.000%	0.000%
Reverse Crown	1+740.002	−2.000%	2.000%
PC 5	1+746.048	−3.095%	3.095%
Full Super	1+754.463	−4.620%	4.620%
Full Super	1+861.670	−4.620%	4.620%
PT 5	1+870.085	−3.095%	3.095%
Reverse Crown	1+876.130	−2.000%	2.000%
0% Super	1+887.170	−2.000%	0.000%
Normal Crown	1+898.170	−2.000%	−2.000%

C6 Degree : 5°49'17" Radius : 300.000m
Tangent Runout Back : 11.000 Tangent Runout Ahead : 11.000
Runoff Length Back : 22.000 Runoff Length ahead : 22.000
Transition Length Back : 33.000 Transition Length ahead : 33.000
Full Super Rate : 3.900%

Transition Station	Station	%e Left	%e Right
Normal Crown	1+946.365	−2.000%	−2.000%
0% Super	1+957.365	0.000%	−2.000%
Reverse Crown	1+968.647	2.000%	−2.000%
PC 6	1+972.105	2.613%	−2.613%
Full Super	1+979.365	3.900%	−3.900%
Full Super	2+083.826	3.900%	−3.900%
PT 6	2+091.086	2.613%	−2.613%
Reverse Crown	2+094.544	2.000%	−2.000%
0% Super	2+105.826	0.000%	−2.000%
Normal Crown	2+116.826	−2.000%	−2.000%

C7 Degree : 2°54'38" Radius : 600.000m
Tangent Runout Back : 11.000 Tangent Runout Ahead : 11.000
Runoff Length Back : 13.000 Runoff Length ahead : 13.000
Transition Length Back : 24.000 Transition Length ahead : 24.000
Full Super Rate : 2.400%

Transition Station	Station	%e Left	%e Right
Normal Crown	2+192.260	−2.000%	−2.000%
0% Super	2+203.260	0.000%	−2.000%
PC 7	2+211.970	1.608%	−2.000%
Reverse Crown	2+214.093	2.000%	−2.000%
Full Super	2+216.260	2.400%	−2.400%
Full Super	2+604.742	2.400%	−2.400%
Reverse Crown	2+606.909	2.000%	−2.000%
PT 7	2+609.032	1.608%	−2.000%
0% Super	2+617.742	0.000%	−2.000%
Normal Crown	2+628.742	−2.000%	−2.000%

C8 Degree : 2°03'16" Radius : 850.000m
Tangent Runout Back : 11.000 Tangent Runout Ahead : 11.000
Runoff Length Back : 11.000 Runoff Length ahead : 11.000
Transition Length Back : 22.000 Transition Length ahead : 22.000
Full Super Rate : RC

Transition Station	Station	%e Left	%e Right
Normal Crown	3+442.935	−2.000%	−2.000%
0% Super	3+453.935	−2.000%	0.000%
PC 8	3+461.305	−2.000%	1.340%
Reverse Crown/Full Super	3+464.935	−2.000%	2.000%
Reverse Crown /Full Super	3+574.645	−2.000%	2.000%
PT 8	3+578.275	−2.000%	1.340%
0% Super	3+585.645	−2.000%	0.000%
Normal Crown	3+596.645	−2.000%	−2.000%

EXISTING UTILITIES

LOCATION	DESCRIPTION	SKEW	* REMARKS
0+023±	Frontier Communications Buried Cable	±98°	To be relocated by owner ***
0+026±	Navajo Nation 50 mm underground waterline	unknown	To be encased in steel **
0+060.191	Frontier Communications Telephone Line	98°	To be raised and pole to be relocated by owner.
0+075.000	BIA 75 mm underground waterline.	unknown	Abandoned line. Protect in place.
0+271.137	Jemez Mountain Electric overhead powerline.	96°	Protect in place. Elev. = 1987.203
2+231.219	NTUA 203 mm undergroung waterline.	86°	Protect in place.
2+375.384	Jemez Mountain Electric overhead powerline.	89°	Protect in place. Elev. = 2004.684
2+233, 22.8m Rt. to 3+615, 16.7m Rt.	NTUA underground waterline parallel to roadway.	n/a	Parallel waterline at school location to remain in place.

* – Information in REMARKS column is assumed. Utility owners may modify requirements based on their specifications.
** – Contractor to verify/coordinate encasement with owner. Work to be incidental to Roadway Items with no additional payment.
*** – The Contractor shall contact the owner a minumum of three (3) working days prior to excavation near this cable. The owner will relocate, lower, or encase the cable a needed to clear roadway work. The Contractor shall coordinate and assist the utility owner with this work.

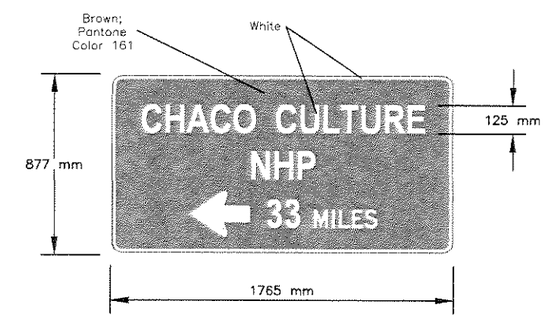

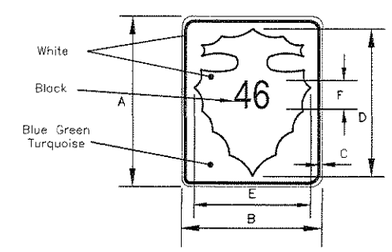

SIGN	DIMENSION (mm)					F NUMERALS				
	A	B	C	D	E	DIGITS IN ROUTE	1	2	3	4
MIN.	610	457	13	495	343	SIZE (mm)	254E	245D	203C	152B

UNITED STATES
DEPARTMENT OF THE INTERIOR
BUREAU OF INDIAN AFFAIRS
NAVAJO REGION OFFICE * DIVISION OF TRANSPORTATION

SUPERELEVATION GRADE TABULATIONS & UTILITY INFO

Designed by: RDL
Drawn by: RDL, cdh Date: 12/14/09
Revised by: Date:
File Name: N46_Superelevation

REGION	STATE	RESERVATION	ROUTE	PROJECT NO.	SHEET	TOTAL SHEETS
NAVAJO	NEW MEXICO	NAVAJO	N46	N46(1)1,2&4	6	58

ALIGNMENT

ALIGN POINT	STATION	BEARING	NORTHING	EASTING
BOP	0+004.111		550649.974	846641.751
PC C1	0+130.893	N28°23'26"W	550761.507	846581.468
PI C1	0+208.182	N28°23'26"W	550829.501	846544.719
PT C1	0+275.996	N20°27'02"E	550901.919	846571.723
PC C2	0+422.742	N20°27'02"E	551039.416	846622.996
PI C2	0+508.262	N20°27'02"E	551119.546	846652.877
PT C2	0+590.022	N49°48'40"E	551174.733	846718.207

CONTROL POINTS

NUMBER	NORTHING	EASTING	ELEVATION	DESCRIPTION	STATION	OFFSET
CP-1	550809.590	846602.007	1985.385	BRASS CAP	0+172.856	36.900 Rt.
TBM 100	550688.734	846649.173	1986.804	16M REBAR	0+034.680	24.959 Rt.
TBM 101	550792.013	846595.769	1985.508	16M REBAR	0+154.568	25.690 Rt.
TBM 102	550921.581	846605.468	1982.009	16M REBAR	0+306.210	24.748 Rt.
TBM 103	551081.206	846672.270	1975.632	16M REBAR	0+484.405	26.227 Rt.

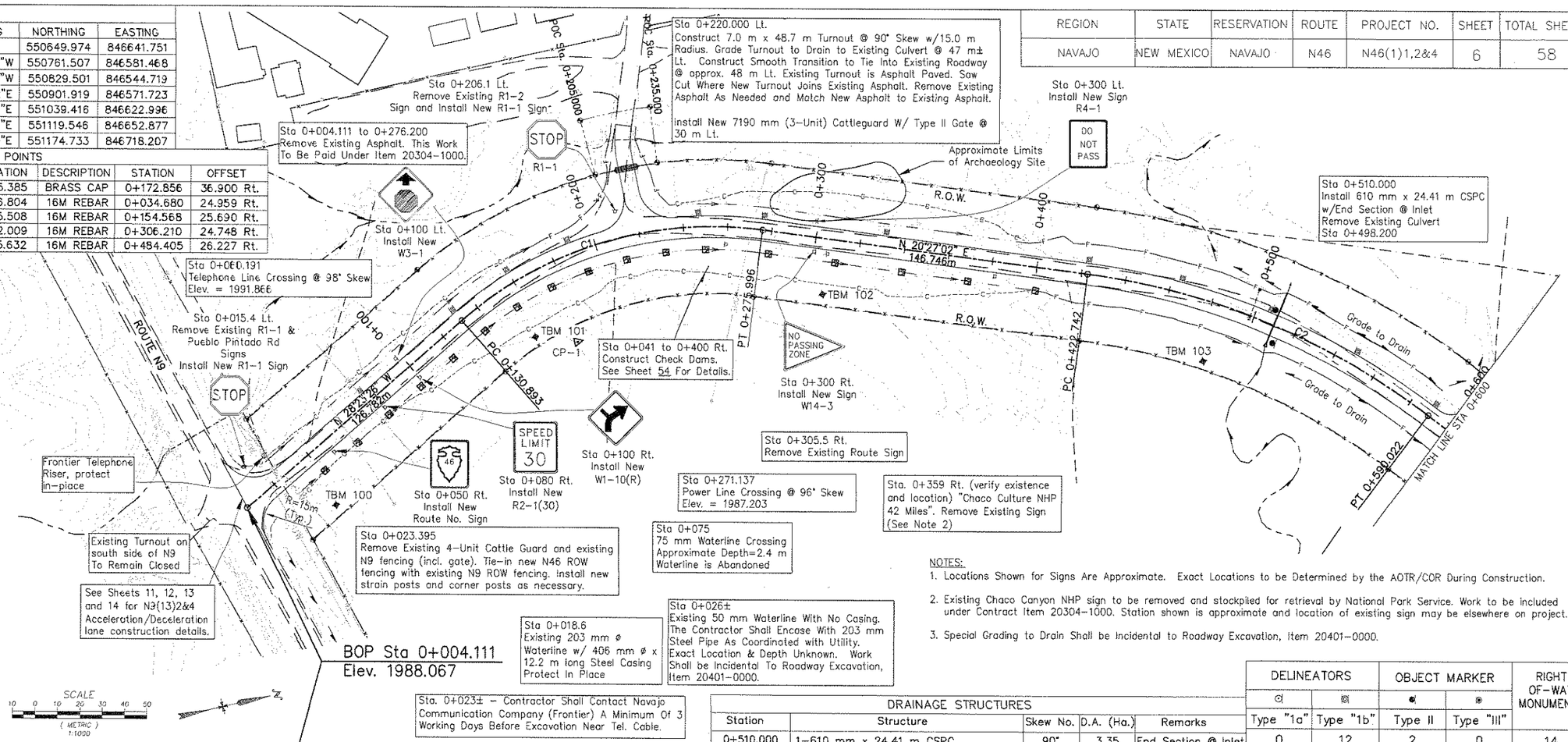

CURVE C1	CURVE C2
D = 48°50'28" RT	D = 29°21'38" RT
Dc = 10°15'34"	Dc = 5°20'59"
R = 170.220m	R = 326.440m
T = 77.289m	T = 85.520m
L = 145.103m	L = 167.280m
e = 5.022%	e = 3.691%
PI	PI
STA = 0+208.182	STA = 0+508.262
N = 550829.501	N = 551119.546
E = 846544.719	E = 846652.877

NOTES:

1. Locations Shown for Signs Are Approximate. Exact Locations to be Determined by the AOTR/COR During Construction.
2. Existing Chaco Canyon NHP sign to be removed and stockpiled for retrieval by National Park Service. Work to be included under Contract Item 20304-1000. Station shown is approximate and location of existing sign may be elsewhere on project.
3. Special Grading to Drain Shall be Incidental to Roadway Excavation, Item 20401-0000.

DRAINAGE STRUCTURES

Station	Structure	Skew No.	D.A. (Ha.)	Remarks
0+510.000	1-610 mm x 24.41 m CSPC	90°	3.35	End Section @ Inlet

DELINEATORS		OBJECT MARKER		RIGHT OF-WAY MONUMENTS
Type "1a"	Type "1b"	Type II	Type "III"	
0	12	2	0	14

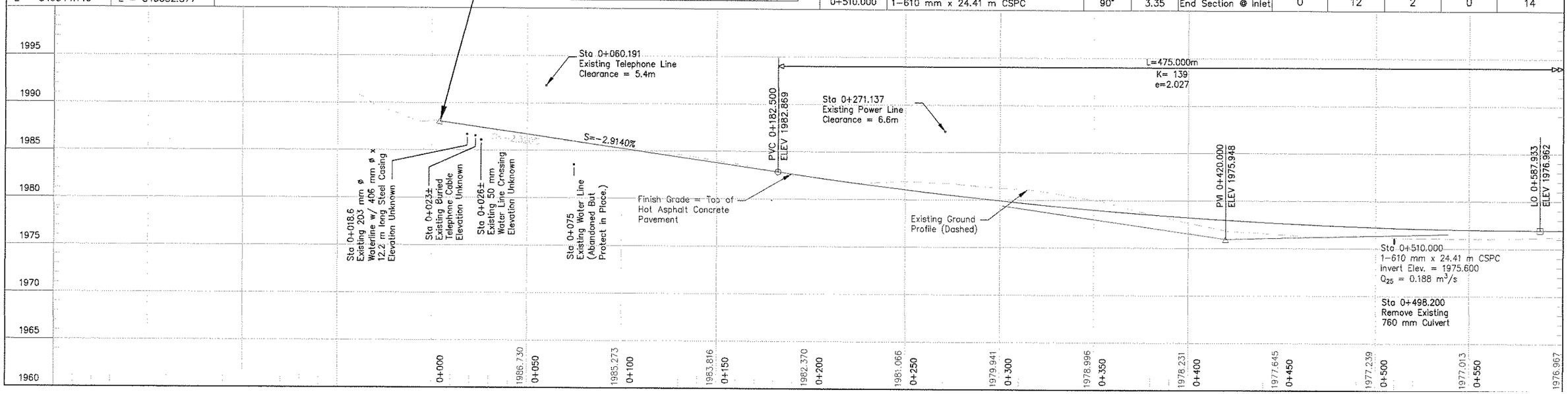

REGION	STATE	RESERVATION	ROUTE	PROJECT NO.	SHEET	TOTAL SHEETS
NAVAJO	NEW MEXICO	NAVAJO	N46	N46(1)1,2&4	7	58

CONTROL POINTS

NUMBER	NORTHING	EASTING	ELEVATION	DESCRIPTION	STATION	OFFSET
TBM 104	551215.265	846809.941	1975.699	16M REBAR	0+686.256	28.233 Rt.
TBM 105	551312.942	846922.284	1976.239	16M REBAR	0+835.108	26.112 Rt.
TBM 106	551426.968	847025.858	1976.449	16M REBAR	0+974.000	29.572 Rt.
TBM 107	551564.751	847040.896	1977.806	16M REBAR	1+111.204	16.723 Rt.
TBM 108	551681.712	847149.553	1977.257	16M REBAR	1+297.535	26.273 Rt.

ALIGNMENT

ALIGN POINT	STATION	BEARING	NORTHING	EASTING
PC C3	0+916.316	N49°48'40"E	551385.294	846967.470
PI C3	0+947.553	N49°48'40"E	551405.451	846991.333
PT C3	0+976.449	N11°31'47"E	551436.058	846997.576
PC C4	1+128.360	N11°31'47"E	551584.904	847027.940
PI C4	1+198.745	N11°31'47"E	551653.868	847042.008
PT C4	1+259.979	N61°48'16"E	551687.124	847104.040

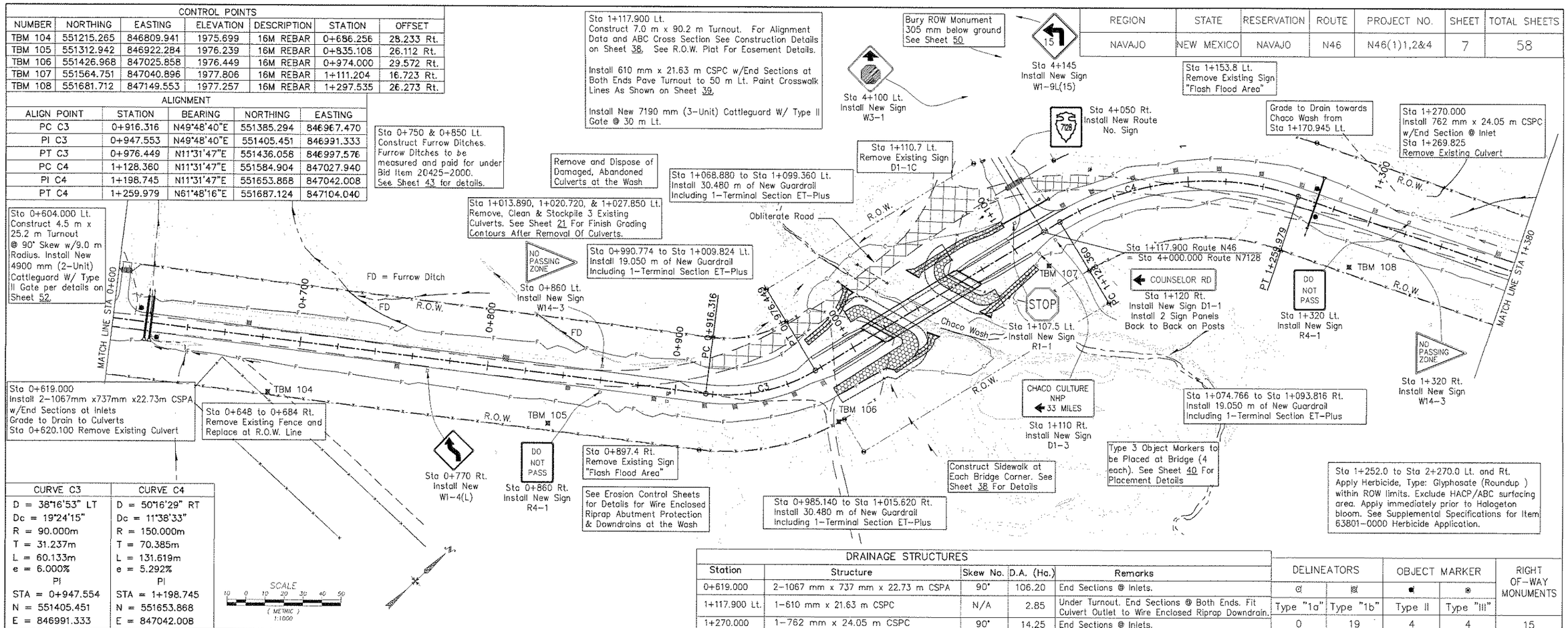

CURVE C3	CURVE C4
D = 38°16'53" LT	D = 50°16'29" RT
Dc = 19°24'15"	Dc = 11°38'33"
R = 90.000m	R = 150.000m
T = 31.237m	T = 70.385m
L = 60.133m	L = 131.619m
e = 6.000%	e = 5.292%
PI	PI
STA = 0+947.554	STA = 1+198.745
N = 551405.451	N = 551653.868
E = 846991.333	E = 847042.008

DRAINAGE STRUCTURES

Station	Structure	Skew No.	D.A. (Ha.)	Remarks	DELINEATORS		OBJECT MARKER		RIGHT OF-WAY MONUMENTS
					Type "1a"	Type "1b"	Type II	Type "III"	
0+619.000	2-1067 mm x 737 mm x 22.73 m CSPA	90°	106.20	End Sections @ Inlets.	0	19	4	4	15
1+117.900 Lt.	1-610 mm x 21.63 m CSPC	N/A	2.85	Under Turnout. End Sections @ Both Ends. Fit Culvert Outlet to Wire Enclosed Riprap Downdrain.					
1+270.000	1-762 mm x 24.05 m CSPC	90°	14.25	End Sections @ Inlets.					

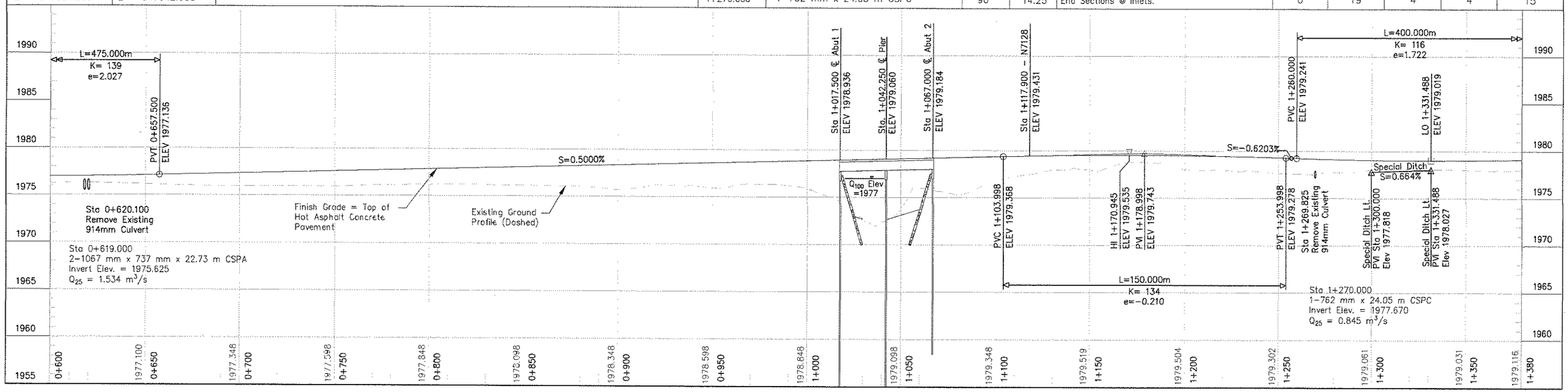

REGION	STATE	RESERVATION	ROUTE	PROJECT NO.	SHEET	TOTAL SHEETS
NAVAJO	NEW MEXICO	NAVAJO	N46	N46(1)1,2&4	8	58

CONTROL POINTS						
NUMBER	NORTHING	EASTING	ELEVATION	DESCRIPTION	STATION	OFFSET
CP-2	552106.491	847705.906	1996.540	Brass Cap	2+004.966	27.963 Rt.
TBM 109	551788.779	847345.890	1979.573	16M Rebar	1+521.162	24.677 Rt.
TBM 110	551850.886	847491.616	1983.042	16M Rebar	1+678.940	38.792 Rt.
TBM 111	551927.500	847594.194	1988.202	16M Rebar	1+799.212	27.368 Rt.
TBM 112	552096.955	847697.066	1996.063	16M Rebar	1+990.912	25.659 Rt.
TBM 113	552211.862	847807.656	1994.670	16M Rebar	2+159.623	22.721 Rt.

ALIGNMENT				
ALIGN POINT	STATION	BEARING	NORTHING	EASTING
PC C5	1+746.047	N61°48'16"E	551916.782	847532.432
PI C5	1+809.965	N61°48'16"E	551946.982	847588.765
PT C5	1+870.084	N27°41'35"E	552003.578	847618.470
PC C6	1+972.104	N27°41'35"E	552093.912	847665.882
PI C6	2+032.387	N27°41'35"E	552147.289	847693.897
PT C6	2+091.085	N50°25'00"E	552185.701	847740.357

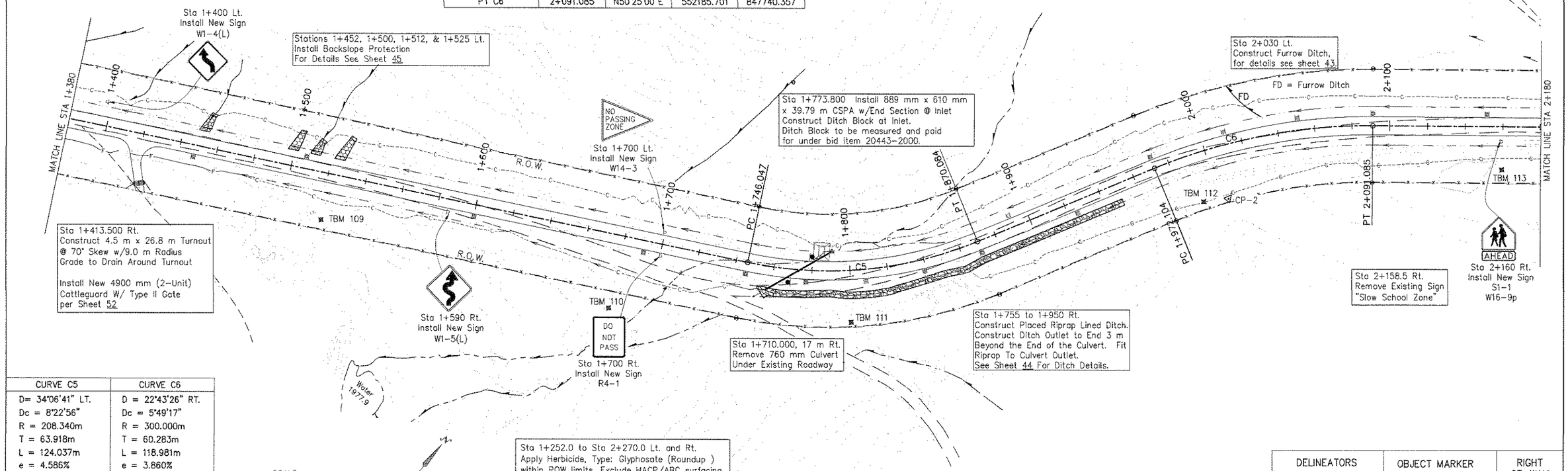

CURVE C5	CURVE C6
D= 34°06'41" LT.	D = 22°43'26" RT.
Dc = 8°22'56"	Dc = 5°49'17"
R = 208.340m	R = 300.000m
T = 63.918m	T = 60.283m
L = 124.037m	L = 118.981m
e = 4.586%	e = 3.860%
PI	PI
STA = 1+809.966	STA = 2+032.387
N = 551946.982	N = 552147.289
E = 847588.765	E = 847693.897

Sta 1+252.0 to Sta 2+270.0 Lt. and Rt.
Apply Herbicide, Type: Glyphosate (Roundup) within ROW limits. Exclude HACP/ABC surfacing area. Apply immediately prior to Halogeton bloom. See Supplemental Specifications for Item 63801-0000 Herbicide Application.

DRAINAGE STRUCTURES					DELINEATORS		OBJECT MARKER		RIGHT OF-WAY MONUMENTS
Station	Structure	Skew No.	D.A. (Ha.)	Remarks	Type "1a"	Type "1b"	Type II	Type "III"	
1+773.800	1-889 mm x 610 mm x 39.79 m CSPA	56°	15.55	End Section & Ditch Block @ Inlet. Tie Outlet Into Riprap Lined Ditch.	0	16	2	0	8

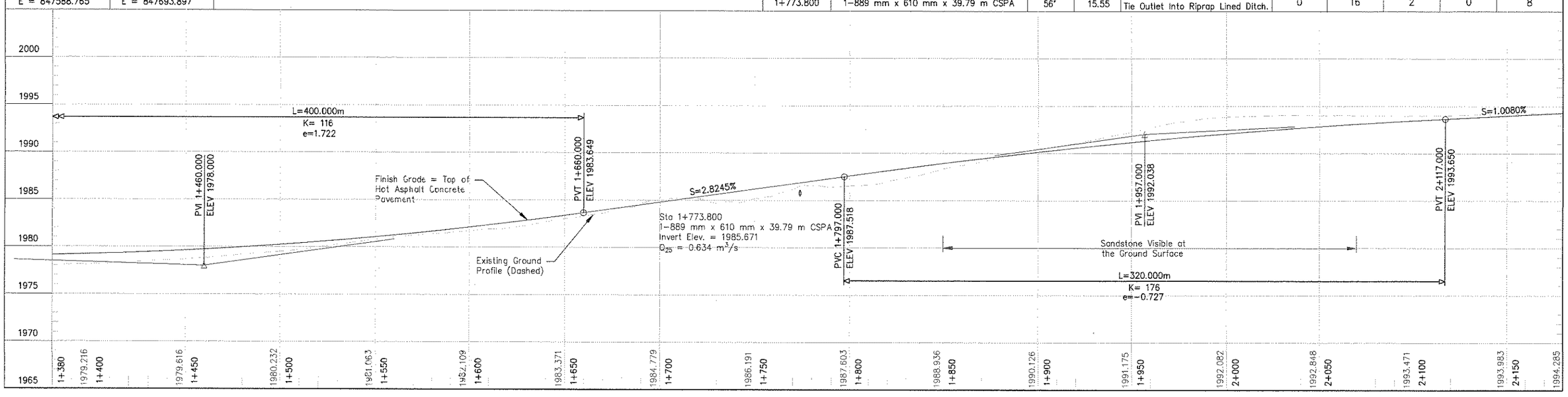

REGION	STATE	RESERVATION	ROUTE	PROJECT NO.	SHEET	TOTAL SHEETS
NAVAJO	NEW MEXICO	NAVAJO	N46	N46(1)1,2&4	9	58

CURVE C7
D = 37°55'00" RT
Dc = 2°54'38"
R = 600.000m
T = 206.109m
L = 397.062m
e = 2.413%
PI
STA = 2+418.078
N = 552394.061
E = 847992.370

CONTROL POINTS

NUMBER	NORTHING	EASTING	ELEVATION	DESCRIPTION	STATION	OFFSET
TBM 114	552307.070	847949.615	1995.210	16M REBAR	2+336.252	27.564 Rt.
TBM 115	552401.134	848071.172	1997.736	16M REBAR	2+484.713	17.996 Lt.
TBM 116	552413.118	848226.728	1998.703	16M REBAR	2+637.737	12.232 Lt.
TBM 117	552421.262	848379.994	2001.650	16M REBAR	2+791.175	15.916 Lt.
TBM 118	552426.876	848561.639	2004.649	16M REBAR	2+972.906	16.244 Lt.

ALIGNMENT

ALIGN POINT	STATION	BEARING	NORTHING	EASTING
PC C7	2+211.969	N50°25'00"E	552262.728	847833.522
PI C7	2+418.078	N50°25'00"E	552394.061	847992.370
PT C7	2+609.032	N88°20'00"E	552400.055	848198.391

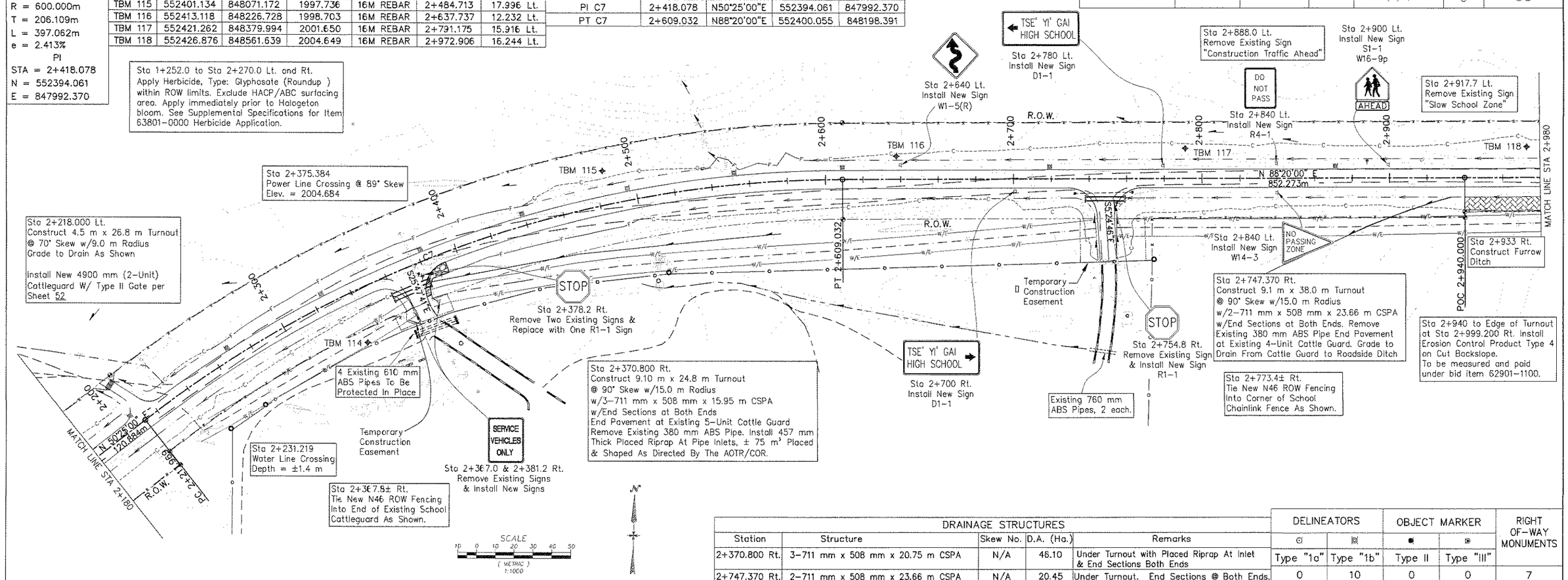

DRAINAGE STRUCTURES

Station	Structure	Skew No.	D.A. (Ha.)	Remarks
2+370.800 Rt.	3-711 mm x 508 mm x 20.75 m CSPA	N/A	46.10	Under Turnout with Placed Riprap At Inlet & End Sections Both Ends
2+747.370 Rt.	2-711 mm x 508 mm x 23.66 m CSPA	N/A	20.45	Under Turnout. End Sections @ Both Ends.

DELINEATORS		OBJECT MARKER		RIGHT OF-WAY MONUMENTS
Type "1a"	Type "1b"	Type II	Type "III"	
0	10	0	0	7

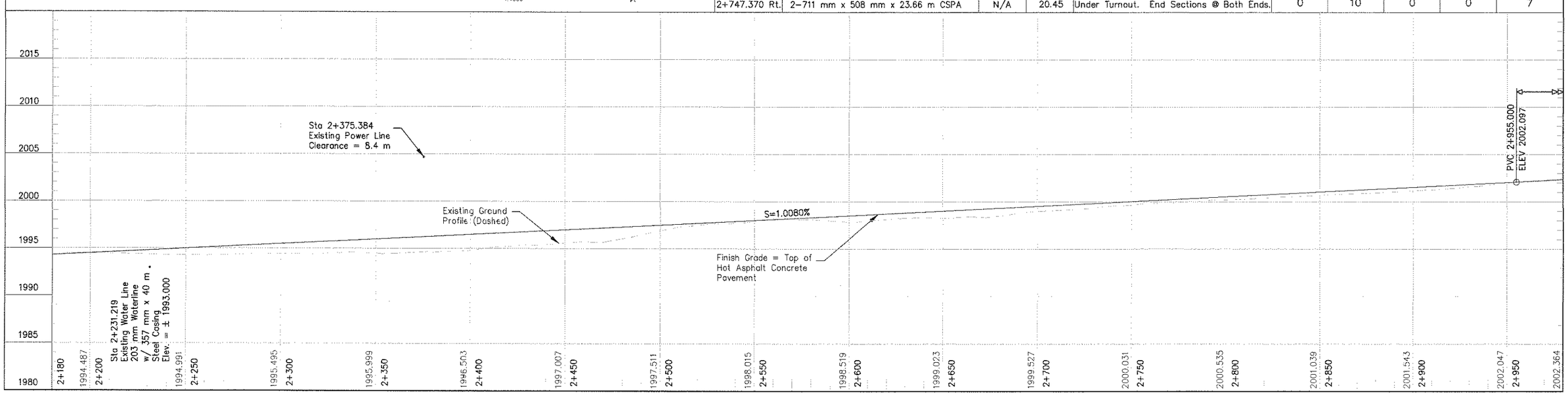

CONTROL POINTS						
NUMBER	NORTHING	EASTING	ELEVATION	DESCRIPTION	STATION	OFFSET
CP-3	552458.905	849167.967	2013.042	BRASS CAP	3+583.374	22.097 Lt.
TBM 119	552432.702	848728.842	2005.524	16M REBAR	3+140.208	17.205 Lt.
TBM 120	552441.422	848882.457	2007.405	16M REBAR	3+294.012	21.453 Lt.
TBM 121	552444.022	849048.606	2010.227	16M REBAR	3+460.166	19.220 Lt.

ALIGNMENT				
ALIGN POINT	STATION	BEARING	NORTHING	EASTING
PC C8	3+461.305	N88°20'00"E	552424.844	849050.303
PI C8	3+519.882	N88°20'00"E	552426.547	849108.856
PT C8	3+578.273	N80°26'56"E	552436.267	849166.621
EOP	3+635.000	N80°26'56"E	552445.679	849222.560

REGION	STATE	RESERVATION	ROUTE	PROJECT NO.	SHEET	TOTAL SHEETS
NAVAJO	NEW MEXICO	NAVAJO	N46	N46(1)1,2&4	10	58

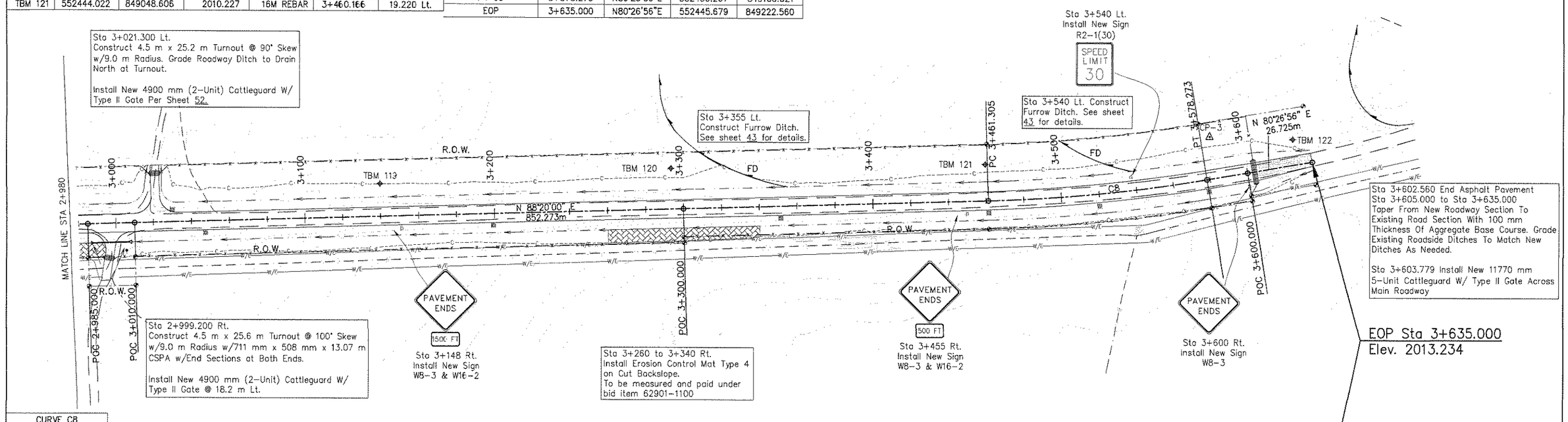

CURVE C8
D = 7°53'04" LT
Dc = 2°03'16"
R = 850.000m
T = 58.577m
L = 116.968m
e = RC
PI
STA = 3+519.882
N = 552426.547
E = 849108.856

DRAINAGE STRUCTURES				
Station	Structure	Skew No.	D.A. (Ha.)	Remarks
2+999.200 Rt.	1-711 mm x 508 mm x 13.07 m CSPA	N/A	12.95	Under Turnout, End Sections @ Both Ends.

DELINEATORS		OBJECT MARKER		RIGHT OF-WAY MONUMENTS
Type "1a"	Type "1b"	Type II	Type "III"	
0	7	0	0	14

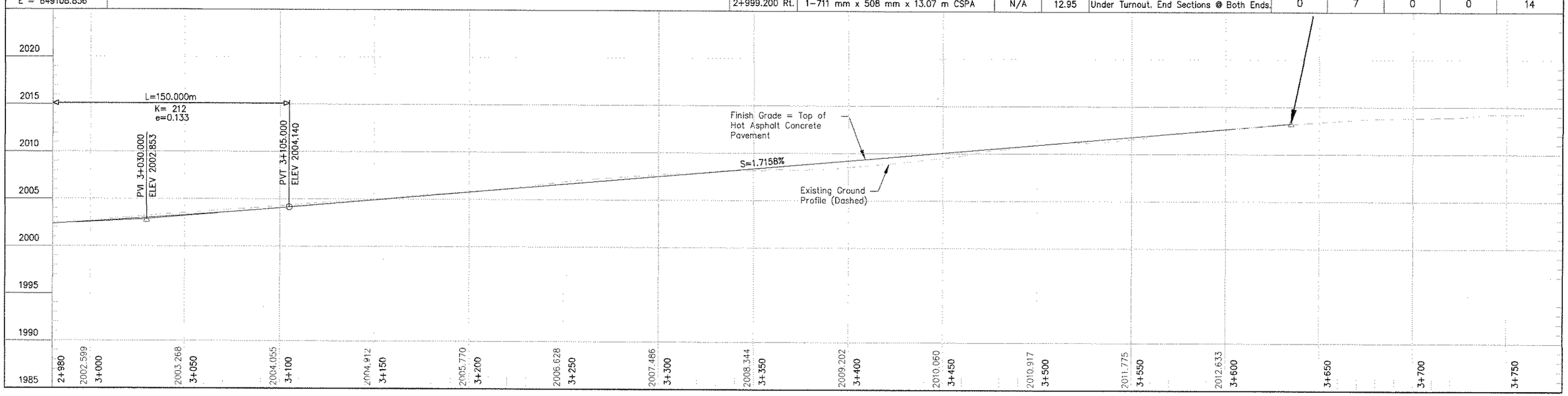

REGION	STATE	RESERVATION	ROUTE	PROJECT NO.	SHEET	TOTAL SHEETS
NAVAJO	NEW MEXICO	NAVAJO	N9	N46(1-D),2&4	11	58

SEQUENCE OF PAVEMENT RECONSTRUCTION:

1. Prior to any pavement milling work, the Contractor shall survey the project roadway to re-establish a best fit centerline horizontal alignment and vertical profile. The survey data points shall not exceed a point spacing of 20 meters (10m on vertical profile) and shall include centerline points, edge of pavement points (left & right), PC's, PT's, PI's, and all subgrade catch points to the ditch line limits. All the survey data shall be submitted in the InRoads B.B format with hard copy printouts of the best fit horizontal alignment and vertical profiles to the NRDOT Planning & Design Branch Chief, for review and approval. As-Built plans will be provided upon written request through the AO. This work shall be in accordance with section 152 and paid for under bid item 15201-0000.

2. The Contractor shall saw cut (full depth) the existing pavement at the edge of pavement line at all existing turnouts, and match the new pavement with the existing to provide a smooth joint transition.

3. The Contractor shall mill and pulverize the top 76mm of existing asphalt concrete pavement structure, which includes maintenance patches, to a gradation suitable for embankment construction use. The Contractor has the option to utilize a self-propelled pulverizing machine or other construction equipment/methods capable of maintaining a uniform grade and cross section.

4. After pulverizing, the Contractor shall build up the existing subgrade and shoulders as needed with the milled material.

5. The Contractor shall furnish and place 203 mm thickness of new Aggregate Base Course material on the finished and approved subgrade.

6. Place new 102 mm (1-51 mm lift) of hot asphalt concrete pavement.

7. The Contractor shall provide for a safe and relatively dust free driving surface throughout the reconstruction process for all school, general traveling public, and local traffic use day and night. The Contractor's traffic control and construction sequencing plan shall include these requirements and be submitted for review and approval prior to any ground disturbing activities taking place.

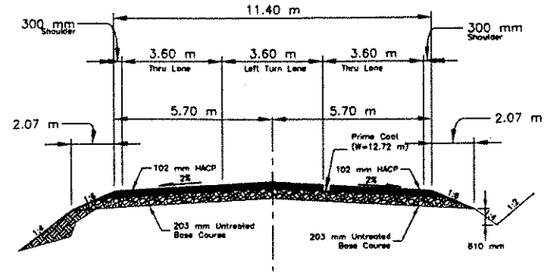

PROPOSED N9 ACCEL/DECEL LANES
SECTION A-A

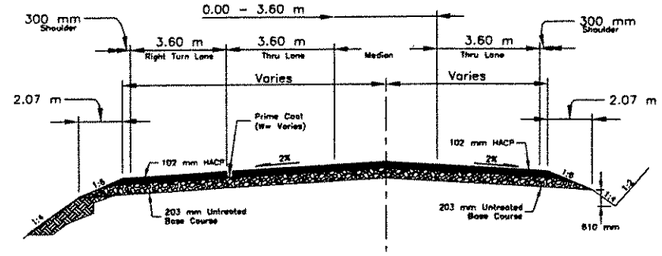

PROPOSED N9 ACCEL/DECEL LANES
SECTION B-B

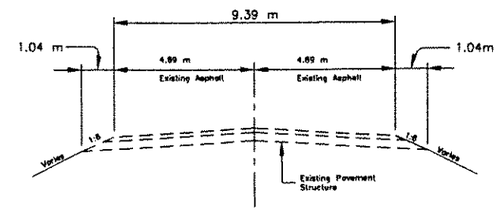

EXISTING N9 ROADWAY
SECTION C-C

GENERAL NOTES

1. SEE SHEET 2 OF 58 FOR PROJECT RELATED NOTES.

2. STA. 11+489, RT., EXISTING TURNOUT TO BE OBLITERATED. TURNOUT EMBANKMENT TO BE USED AS FILL ON N9 ROADWAY WIDENING OR WASTED AS NECESSARY.

3. EXISTING PIPE CULVERTS WITHIN PROJECT LIMITS ARE TO BE PROTECTED IN PLACE.

See Sheet 14 of 58 for Vertical Alignment (every 10 m) & Horizontal Alignment Data.

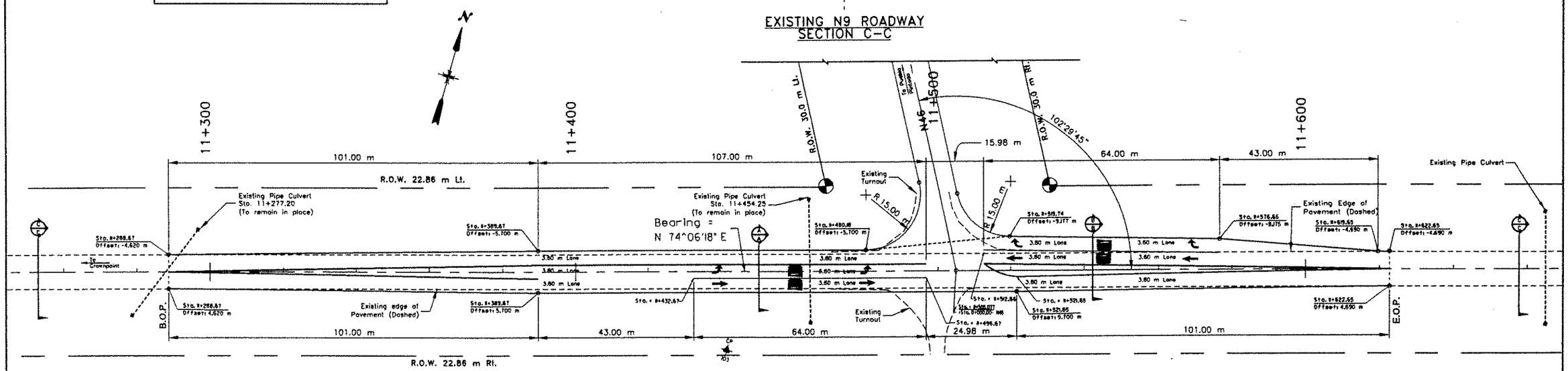

PROPOSED N9 ACCEL/DECEL LAYOUT
STA. 11+288.67 (BOP) TO STA. 11+622.65 (EOP)
PROJECT LENGTH = 333.98 m

SCALE: Meters
0 10 20 30 40 50

N9 EARTHWORK VOLUME

STATION TO STATION			CUT (m^3)	FILL (m^3)	WASTE (m^3)	BORROW (m^3)
11+288.671	to	11+338.268	218.00	218.00	0.00	0.00
11+338.268	to	11+622.650	1296.00	156.00	1140.00	0.00
		TOTAL=	1514.00	374.00	1140.00	0

25% Shrinkage factor applied

UNITED STATES
DEPARTMENT OF THE INTERIOR
BUREAU OF INDIAN AFFAIRS
NAVAJO REGIONAL OFFICE * DIVISION OF TRANSPORTATION

N9 ACCEL\DECEL
LAYOUT, TYPICAL SECTIONS,
PAVEMENT MARKINGS AND QUANTITIES

DRAWN BY:NRDOT	DATE:07/02/08
DESIGNED BY:NRDOT	DATE:07/02/08
REVISED:05/17/10	BY:cdh
SCALE: 1:500 and 1:100	
FILENAME:Accel_Decel_1.dgn	
SHEET MODEL NAME:N46_N9 Intersection	

REGION	STATE	RESERVATION	ROUTE	PROJECT NO.	SHEET	TOTAL SHEETS
NAVAJO	NEW MEXICO	NAVAJO	N46	N46(III),2&4	12	58

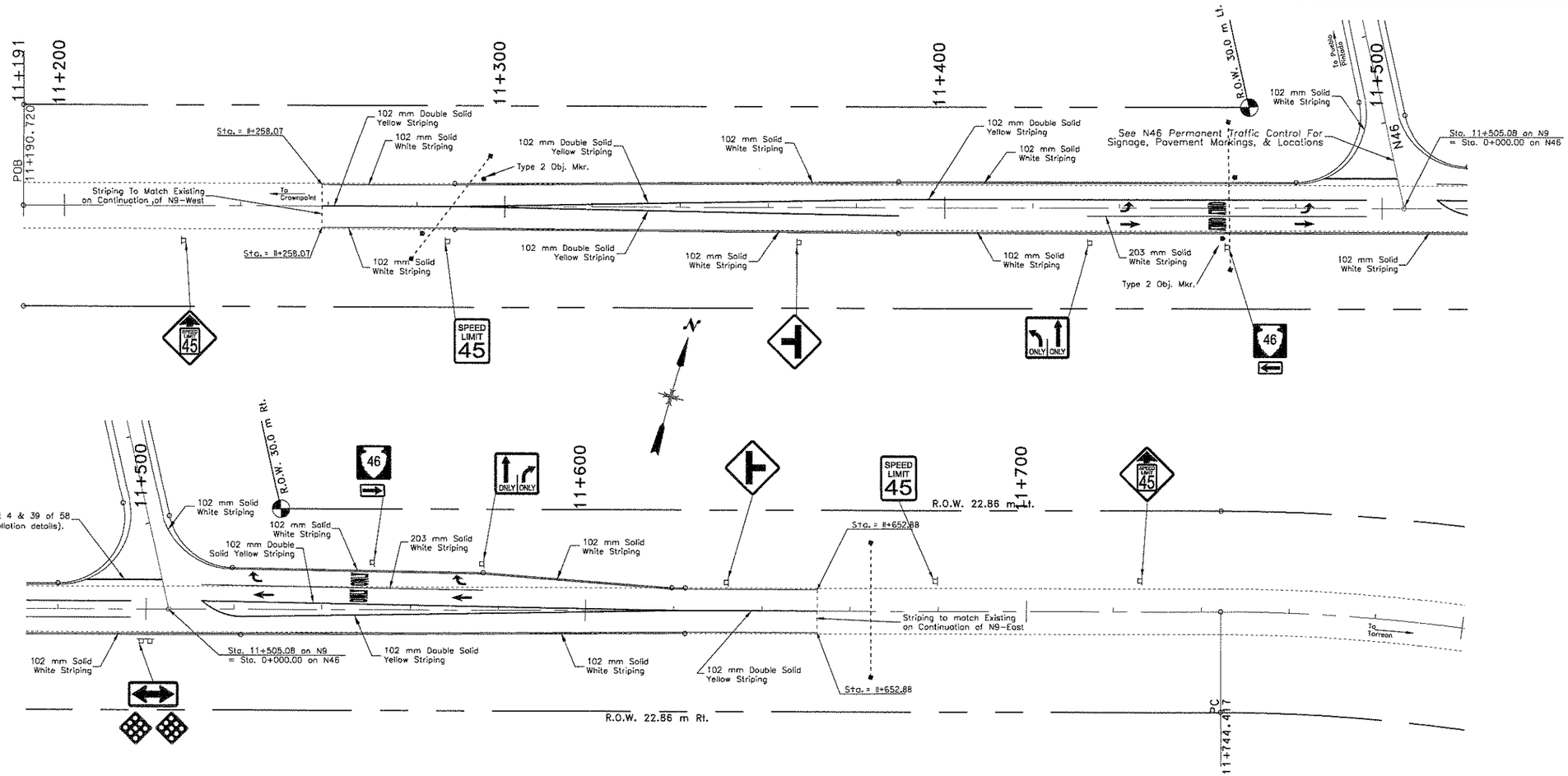

PROPOSED N9 ACCEL/DECEL DESIGN

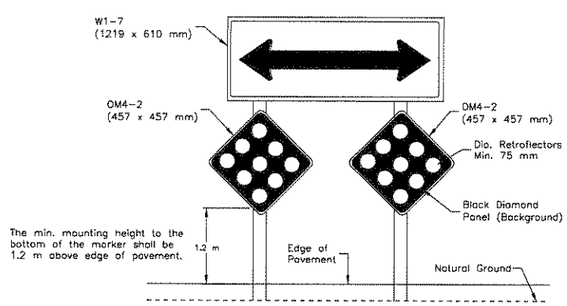

Note: Type 4 Object Marker consists of nine (9) red retroflectors, each with a min. dia. of 75 mm, mounted symetrically on a black diamond panel.

PERMANENT BARRICADE

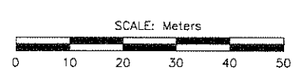

UNITED STATES
DEPARTMENT OF THE INTERIOR
BUREAU OF INDIAN AFFAIRS

NAVAJO REGIONAL OFFICE * DIVISION OF TRANSPORTATION

N9 ACCEL/DECEL
PEMANENT TRAFFIC CONTROL AND
PAVEMENT MARKINGS DETAILS

DRAWN BY: Albert Lee	DATE: 4/10/08
DESIGNED BY: NRDOT	DATE: 3/30/08
REVISED:	BY:
SCALE: 1:500 and 1:100	
FILENAME: Accel_Decel_2	
SHEET MODEL NAME: N46_N9 Intersection	

REGION	STATE	RESERVATION	ROUTE	PROJECT NO.	SHEET	TOTAL SHEETS
NAVAJO	NEW MEXICO	NAVAJO	N9	N46(11),2&4	13	58

N9 PERMANENT TRAFFIC CONTROL

Permanent Roadside Sign, Post and Hardware

Station	Location	Detail No.	Description	Sign Panel Size (mm)	Area of Sign (sq. m.)	No. of Post	Post Wt. (kg/m)	No. of Panel	Total Area of Panel (sq.m.)
11+464.00	Rt.	See Detail M6-1	46	610 x 457 357 x 510	0.27 0.18	1	4.10	1 1	0.27 0.18
11+552.00	Lt.	See Detail M6-1	46	610 x 457 357 x 510	0.27 0.18	1	4.10	1 1	0.27 0.18
11+286.00 11+680.00	Rt. Lt.	R2-1	SPEED LIMIT 45	762 x 762	0.58	1	4.10	2	1.16
11+226.00 11+727.00	Rt. Lt.	W3-5	SPEED LIMIT 45	762 x 762	0.58	1	4.10	2	1.16
11+367.00	Rt.	W2-2L		762 x 762	0.58	2	2.98	1	0.58
11+630.00	Lt.	W2-2R		762 x 762	0.58	2	2.98	1	0.58
11+433.00	Rt.	R3-8a	ONLY ONLY	762 x 610	0.46	1	4.10	1	0.46
11+577.00	Lt.	R3-8a	ONLY ONLY	762 x 610	0.46	1	4.10	1	0.46
11+500.00	Rt.	W1-7		1219 x 610	0.72	2	2.98	1	0.72
		OM4-2		450 x 450	0.20			2	0.40
63302-0003 – Sign Installation, 1 post & hardware: 4.10 kg/m								Total (Sq. m.)	4.14
63302-0010 – Sign Installation, 2 post & hardware: 2.98 kg/m								Total (Sq. m.)	2.28

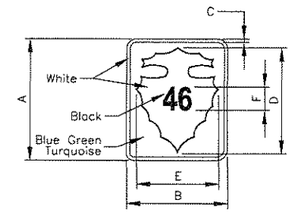

SIGN	DIMENSION					F NUMERALS				
	A	B	C	D	E	DIGITS IN ROUTE	1	2	2	4
Min.	610	457	13	495	343	SIZE & SERIES (mm)	254E	245D	203C	152B

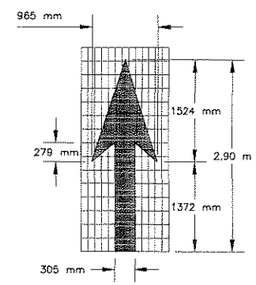

ITEM 63405-2950
Pavement Marking, Elongated
Through Lane-Use Arrow, Type "H"
4 Each @ N9 Main Line

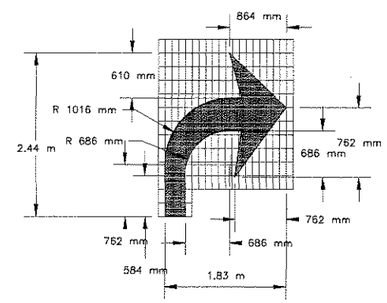

ITEM 63405-2900
Pavement Marking, Elongated
Turn Lane-Use Arrow,
Type "H" 2 Each @
N9 Main Line

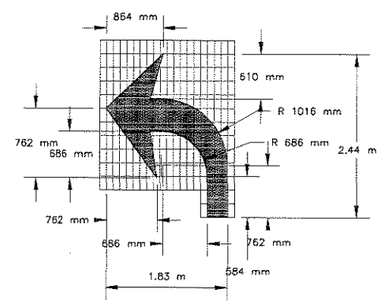

ITEM 63405-2900
Pavement Marking, Elongated
Turn Lane-Use Arrow,
Type "H" 2 Each @
N9 Main Line

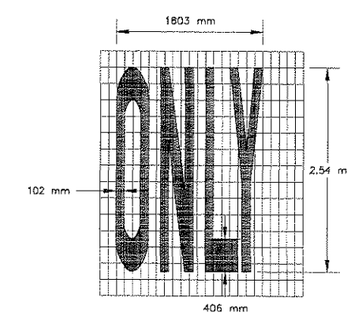

ITEM 63405-3050
Pavement Marking Word "ONLY", Type "H"
4 Each @ N9 Main Line

ESTIMATED QUANTITIES

ITEM	DESCRIPTION	QUANTITY	UNIT
10901-0000	Extra & Misc. Work Under Sect. 109.02 (m)	All Req'd	Lump Sum
15101-0000	Mobilization	All Req'd	Lump Sum
15201-0000	Construction Staking & Survey	All Req'd	Lump Sum
15301-0020	Contractor Quality Control	1275	Man Hrs.
15701-0000	Soil Erosion Control	All Req'd	Lump Sum
15708-1000	Temp. Straw Mulching	0.18	ha
20401-0000	Roadway Excavation	1514	c.m.
20601-0000	Development of Water Supply	0.30	M-Liter
30101-2000	Aggregate Base, Grading "D"	2061	t
40201-0500	Hot Asphaltic Concrete Pavement, Marshall Test, Class B, Grade B	965	t
40502-1200	Asphalt Binder, PG 64-28	56	t
41101-5000	Prime Coat, Grade MC-70	6	t
41201-1000	Asphalt Tack Coat, Grade SS-1, Emulsified Cement	1	t
62510-0000	Seeding, Dry Method	0.18	ha
63302-0003	Sign Installation, 1 Post & Hardware: 4.10 kg/m	4.14	m^2
63302-0010	Sign Installation, 2 Post & Hardware: 2.98 kg/m	2.28	m^2
63308-2000	Object Marker Flexible, Type 2	4	Each
63401-1510	Pavement Markings, Type "H", Solid Yellow	1,462	m
63401-1520	Pavement Markings, Type "H", Solid White	810	m
63405-2900	Pavement Markings, Type "H", Turn "ARROW"	4	Each
63405-2950	Pavement Markings, Type "H", Straight "ARROW"	4	Each
63405-3050	Pavement Markings, Type "H", Word "ONLY"	4	Each
63501-0000	Temporary Traffic Control	All Req'd	Lump Sum
63502-3000	Temporary Traffic Control, Raised Pavement Markers	288	Each
63506-0500	Flagger	1,466	Man Hrs.
QUANTITIES SHOWN ARE FOR N9 ACCEL\DECEL ONLY – included in schedule on sheet 3 of 58.			

OBJECT MARKERS-TYPE 2

STATION	LOC.	EACH
11+277.20	Lt/Rt	2
11+454.25	Lt/Rt	2
	Total	4

UNITED STATES
DEPARTMENT OF THE INTERIOR
BUREAU OF INDIAN AFFAIRS

NAVAJO REGIONAL OFFICE * DIVISION OF TRANSPORTATION

N9 ACCEL/DECEL
PERMANENT TRAFFIC CONTROL
AND QUANTITIES

DRAWN BY: NRODOT	DATE: 02/96
DESIGNED BY: NRODOT	DATE: 02/96
REVISED: 1/2	BY: D3
SCALE: NTS	
FILENAME: N46Trafsgn	
SHEET MODEL NAME: N9_N46_Accel_Decel	

REGION	STATE	RESERVATION	ROUTE	PROJECT NO.	SHEET	TOTAL SHEETS
NAVAJO	NEW MEXICO	NAVAJO	N46	N46(1)1,2&4	14	58

N9(13)2&4 – VERTICAL ALIGNMENT REVIEW REPORT

Vertical Alignment: N9 Existing Pavement – Vertical
Vertical Description: N9 existing pavement elevations @ 10 meters
Horizontal Alignment: N9 New Alignment

Description	Station	Elevation	Description	Station	Elevation	Description	Station	Elevation
PVI	11+290.000	1990.548	PVI	11+400.000	1989.276	PVI	11+510.000	1987.844
PVI	11+300.000	1990.521	PVI	11+410.000	1989.155	PVI	11+520.000	1987.74
Tangent Grade:	-1.27%		Tangent Grade:	-1.21%		Tangent Grade:	-1.03%	
Tangent Length:	10		Tangent Length:	10		Tangent Length:	10	
PVI	11+300.000	1990.521	PVI	11+410.000	1989.155	PVI	11+520.000	1987.74
PVI	11+310.000	1990.395	PVI	11+420.000	1989.025	PVI	11+530.000	1987.637
Tangent Grade:	-1.26%		Tangent Grade:	-1.30%		Tangent Grade:	-1.04%	
Tangent Length:	10		Tangent Length:	10		Tangent Length:	10	
PVI	11+310.000	1990.395	PVI	11+420.000	1989.025	PVI	11+530.000	1987.637
PVI	11+320.000	1990.28	PVI	11+430.000	1988.896	PVI	11+540.000	1987.503
Tangent Grade:	-1.15%		Tangent Grade:	-1.29%		Tangent Grade:	-1.33%	
Tangent Length:	10		Tangent Length:	10		Tangent Length:	10	
PVI	11+320.000	1990.28	PVI	11+430.000	1988.896	PVI	11+540.000	1987.503
PVI	11+330.000	1990.166	PVI	11+440.000	1988.755	PVI	11+550.000	1987.369
Tangent Grade:	-1.14%		Tangent Grade:	-1.41%		Tangent Grade:	-1.35%	
Tangent Length:	10		Tangent Length:	10		Tangent Length:	10	
PVI	11+330.000	1990.166	PVI	11+440.000	1988.755	PVI	11+550.000	1987.369
PVI	11+340.000	1990.048	PVI	11+450.000	1988.614	PVI	11+560.000	1987.22
Tangent Grade:	-1.18%		Tangent Grade:	-1.42%		Tangent Grade:	-1.48%	
Tangent Length:	10		Tangent Length:	10		Tangent Length:	10	
PVI	11+340.000	1990.048	PVI	11+450.000	1988.614	PVI	11+560.000	1987.22
PVI	11+350.000	1989.93	PVI	11+460.000	1988.48	PVI	11+570.000	1987.073
Tangent Grade:	-1.18%		Tangent Grade:	-1.33%		Tangent Grade:	-1.48%	
Tangent Length:	10		Tangent Length:	10		Tangent Length:	10	
PVI	11+350.000	1989.93	PVI	11+460.000	1988.48	PVI	11+570.000	1987.073
PVI	11+360.000	1989.796	PVI	11+470.000	1988.348	PVI	11+580.000	1986.922
Tangent Grade:	-1.34%		Tangent Grade:	-1.33%		Tangent Grade:	-1.50%	
Tangent Length:	10		Tangent Length:	10		Tangent Length:	10	
PVI	11+360.000	1989.796	PVI	11+470.000	1988.348	PVI	11+580.000	1986.922
PVI	11+370.000	1989.659	PVI	11+480.000	1988.222	PVI	11+590.000	1986.772
Tangent Grade:	-1.37%		Tangent Grade:	-1.25%		Tangent Grade:	-1.50%	
Tangent Length:	10		Tangent Length:	10		Tangent Length:	10	
PVI	11+370.000	1989.659	PVI	11+480.000	1988.222	PVI	11+590.000	1986.772
PVI	11+380.000	1989.527	PVI	11+490.000	1988.097	PVI	11+600.000	1986.619
Tangent Grade:	-1.32%		Tangent Grade:	-1.26%		Tangent Grade:	-1.54%	
Tangent Length:	10		Tangent Length:	10		Tangent Length:	10	
PVI	11+380.000	1989.527	PVI	11+490.000	1988.097	PVI	11+600.000	1986.619
PVI	11+390.000	1989.396	PVI	11+500.000	1987.97	PVI	11+610.000	1986.461
Tangent Grade:	-1.31%		Tangent Grade:	-1.26%		Tangent Grade:	-1.58%	
Tangent Length:	10		Tangent Length:	10		Tangent Length:	10	
PVI	11+390.000	1989.396	PVI	11+500.000	1987.97	PVI	11+610.000	1986.461
PVI	11+400.000	1989.276	PVI	11+510.000	1987.844	PVI	11+620.000	1986.34
Tangent Grade:	-1.20%		Tangent Grade:	-1.27%		Tangent Grade:	-1.21%	
Tangent Length:	10		Tangent Length:	10		Tangent Length:	10	

N9(13)2&4 – HORIZONTAL ALIGNMENT REVIEW REPORT

Alignment Name: N9 New Alignment
Alignment Description: N9 Roadway Centerline Data

Description	Station	Northing	Easting
POB	11+288.67	550587.09	846435.57
POE	11+622.65	550678.56	846756.78

Tangential Direction: N 74° 06' 18" E
Tangential Length: 333.98 m

N46(1)1,2&4 – BRIDGE NOTES:

1. SPECIFICATIONS: DESIGN; AASHTO STANDARD SPECIFICATIONS FOR HIGHWAY BRIDGES, 2002, 17TH ED. W/ INTERIM THRU 2006. CONSTRUCTION; STANDARD SPECIFICATIONS FOR CONSTRUCTION OF ROADS AND BRIDGES ON FEDERAL HIGHWAY PROJECTS, FP-03 AND SUPPLEMENTAL SPECIFICATIONS.

2. UNITS: THIS PROJECT HAS BEEN DESIGNED AND DRAWN USING THE SI (METRIC) SYSTEM OF UNITS. ALL UNIT DIMENSIONS AND ELEVATIONS ARE IN METERS UNLESS NOTED OTHERWISE. ALL REINFORCING MEASUREMENTS ARE TO THE CENTERLINE OF THE BAR UNLESS OTHERWISE SHOWN.

3. DESIGN LOADS: DEAD LOADS; CONCRETE = 23.56 kN/m^3, STEEL = 76.97 kN/m^3, PAVING ALLOWANCE = 1.20 kPa OF ROADWAY SURFACE, BACKFILL EARTH PRESSURE = 5.5 kPa/m LIVE LOADS; MS 18 PLUS IMPACT. IMPACT = 15/(L+38) WHERE L = SPAN LENGTH IN METERS. MAXIMUM IMPACT FACTOR = 0.30.

4. RATINGS: INVENTORY RATING = MS 20.9; OPERATING RATING = MS 30.9

5. DESIGN CRITERIA: SUPERSTRUCTURE DESIGNED USING AASHTO LOAD FACTOR DESIGN (LFD) AND SUBSTRUCTURE (INCLUDING BEARINGS) USING SERVICE DESIGN. MATERIAL STRENGTHS ARE F'C = 27.6 MPa FOR REINFORCED CONCRETE, FY = 413.7 MPa FOR REINFORCING STEEL AND FY = 345 MPa FOR H-PILING. STEEL BEAMS SHALL BE DESIGNED IN ACCORDANCE WITH CURRENT AASHTO DESIGN CRITERIA. MATERIAL STRENGTHS ARE FY = 345 MPa FOR STRUCTURAL STEEL.

6. CONCRETE: CAST IN PLACE CONCRETE SHALL BE CLASS A(AE) WITH THE MINIMUM DESIGN STRENGTH INDICATED ABOVE AT 28 DAYS. THE AIR CONTENT FOR CLASS A(AE) CONCRETE SHALL NOT BE LESS THAN THAT SPECIFIED IN THE FP-03. ALL CONCRETE CAST ON OR BELOW GRADE SHALL BE MADE WITH TYPE II CEMENT. THE CONTRACTOR MAY ALSO USE CONCRETE MADE WITH TYPE II CEMENT ELSEWHERE AT NO EXTRA COST TO THE BIA. CHAMFER EXPOSED CORNERS OF ALL CONCRETE 19mm UNLESS OTHERWISE SHOWN. THE TIME LIMITS SPECIFIED IN THE FP-03 SHALL APPLY. IF CONCRETE CAN NOT BE DISCHARGED WITHIN THE SPECIFIED TIME LIMIT, ALTERNATIVES SUCH AS DRY BATCHING, A SITE BATCHING PLANT CONFORMING TO THE SPECIFICATIONS OR RETARDANT ADMIXTURES SHALL BE USED. IF REQUIRED, SUCH ALTERNATIVES SHALL BE DISCUSSED AT PRE-CONSTRUCTION MEETING. APPROVAL OF ALTERNATIVE METHODS SHALL BE BASED ON REVIEW OF HISTORICAL DATA FOR IDENTICAL STRENGTH CONCRETE PLACED AT SIMILARLY REMOTE LOCATIONS. HISTORICAL DATA SHALL SHOW CONFORMANCE TO THE REQUIRED SPECIFICATIONS.

7. FINISHING CONCRETE SURFACES: THE CONCRETE SURFACES LISTED BELOW SHALL RECEIVE A CLASS 2 SURFACE FINISH AS SPECIFIED IN SECTION 552.16 OF THE FP-03. VERTICAL EDGES AND BOTTOM OF THE BRIDGE DECK OVERHANG. EXPOSED SURFACES OF THE SUBSTRUCTURE, INCLUDING THE PIER WALL, DOWN TO 300 mm BELOW THE GROUNDLINE. ALL OTHER SURFACES OF THE CONCRETE SHALL BE GIVEN A CLASS 1 ORDINARY FINISH.

8. DECK SLAB SURFACE TEXTURING: DRIVING SURFACES OF THE BRIDGE DECK AND APPROACH SLAB SHALL BE GIVEN A FINISH IN ACCORDANCE WITH SECTIONS 552.14 (a), (b) AND (c)(1) OF THE FP-03.

9. REINFORCING STEEL: ALL PLAIN REINFORCING STEEL SHALL CONFORM TO AASHTO M31M, GRADE 420 AND EPOXY COATED REINFORCING SHALL CONFORM TO AASHTO M284M AND AASHTO M31M, GRADE 420. ALL REINFORCEMENT IN DECK, OR PROTRUDING INTO THE DECK SHALL BE EPOXY COATED. THE MINIMUM COVER OF ANY REINFORCING STEEL SHALL BE 50 mm UNLESS OTHERWISE SPECIFIED. LENGTHS OF REINFORCING STEEL BARS SHOWN INCLUDE REQUIRED SPLICE LENGTHS FOR SPLICES SHOWN. ANY ADDITIONAL SPLICES NOT SHOWN IN THE PLANS SHALL BE REQUESTED FOR APPROVAL BY THE CONTRACTOR AND SHALL NOT BE UTILIZED UNTIL WRITTEN APPROVAL IS GRANTED BY THE CO. ADDITIONAL REINFORCING STEEL QUANTITIES REQUIRED FOR ADDITIONAL SPLICES NOT SHOWN IN THE PLANS SHALL NOT BE PAID FOR.

10. STRUCTURAL STEEL: STRUCTURAL STEEL FOR WIDE FLANGE BEAMS, DIAPHRAGMS AND CONNECTION PLATES SHALL CONFORM TO AASHTO M270, GRADE 345W+. SHEAR STUDS SHALL CONFORM TO AASHTO M270M, GRADE 250. ALL OTHER STRUCTURAL STEEL SHALL CONFORM TO AASHTO REQUIREMENTS AS SHOWN OR NOTED ON THE PLANS.

11. THE STEEL FABRICATION COMPANY PLANT SHALL BE FULLY CERTIFIED STEEL IN CATEGORY 3, UNDER THE AISC QUALITY CERTIFICATION PROGRAM.

12. MAIN LOAD CARRYING MEMBER COMPONENTS SUBJECTED TO TENSILE STRESS SHALL MEET THE LONGITUDINAL SUPPLEMENT IMPACT (CHARPY V-NOTCH TEST REQUIREMENTS) AASHTO T-243, ZONE 2 OF TABLE 8, TOUGHNESS REQUIREMENTS.

13. ALL SURFACES OF THE STRUCTURAL STEEL SHALL BE BLAST CLEANED IN THE FABRICATION SHOP TO MEET THE REQUIREMENTS OF THE STEEL STRUCTURE PAINTING COUNCIL (SSPC) SSPC-6. AFTER BLAST CLEANING, THE STEEL SHALL BE KEPT CLEAN OF ALL FOREIGN MATERIAL. IF THE STEEL BECOMES CONTAMINATED, THE STEEL SHALL BE CLEANED WITH A METHOD APPROVED BY THE ENGINEER. BEAMS CONTAMINATED WITH CONCRETE OR GROUT SHALL BE WASHED BEFORE THE CONTAMINATE IS ALLOWED TO DRY.

14. STAY-IN-PLACE DECK FORMS: PERMANENT STEEL DECK FORMS MAY BE UTILIZED FOR SLAB CONSTRUCTION PROVIDED THAT BOTH TOP AND BOTTOM MATS OF DECK SLAB REINFORCING BARS ARE EPOXY COATED. COMPLETE SHOP PLANS, DESIGN CALCULATIONS, SPECIFICATIONS, IN ACCORDANCE WITH ALL WORK SHALL BE IN ACCORDANCE WITH THE SUPPLEMENTAL SPECIFICATIONS FOR SECTION 562. THE DESIGN, CALCULATIONS, AND SHOP DRAWINGS FOR THE PROPOSED FORMING SYSTEMS MUST BE APPROVED BY THE CONTRACTING OFFICER PRIOR TO INSTALLATION.

15. STEEL PILES: STEEL PILES SHALL BE HP 360X108 WITH CAST STEEL PILE TIPS CONFORMING TO ASTM A27. PILES SHALL CONFORM TO AASHTO M270M, GRADE 345. PILES SHALL BE DRIVEN TO THREE TIMES THE APPLIED STRUCTURAL LOAD SHOWN IN THE PLANS. PILES SHALL BE DRIVEN UTILIZING THE DYNAMIC FORMULA GIVEN IN SECTION 551.06 (b) OF THE FP-03. THE ULTIMATE PILE CAPACITY (RU) SHALL BE THE APPLIED STRUCTURAL LOAD MULTIPLIED BY A FACTOR OF SAFETY OF 3. PILES SHALL BE DRIVEN TO THE MINIMUM PENETRATION ELEVATION INDICATED FOR LATERAL LOAD STABILITY AND TO PENETRATE UNSUITABLE STRATA OR BELOW TO GAIN THE REQUIRED ULTIMATE CAPACITY. SPLICING SHALL BE IN ACCORDANCE WITH SECTIONS 551.08 AND 551.09 OF THE FP-03 EXCEPT THAT SPLICE DETAILS SHALL BE AS SHOWN IN THE PLANS. PILES SHALL BE DRIVEN TO THE TOLERANCES GIVEN IN SECTION 551.08 OF THE FP-03. AXIAL ALIGNMENT DEVIATIONS SHALL BE MEASURED STARTING FROM THE PLANNED PILE LOCATION AT THE CUTOFF ELEVATION AND SHALL NOT EXCEED THE TOLERANCE GIVEN IN SECTION 551.08 OF THE FP-03. ASSURE CORRECT PILE PLACEMENT AND ALIGNMENT (WITHIN APPLICABLE TOLERANCES) BY PROVIDING HORIZONTAL BRACING BETWEEN THE CRANE AND PILE DRIVING LEADS.

16. PAINTING STEEL PILES: SEE PIER WALL DETAIL SHEET FOR DETAILS REGARDING PAINTING OF STEEL PILES.

17. TEST PILES: THIS BRIDGE PROJECT INCLUDES TEST PILES, SEE SUPPLEMENTAL SPECIFICATIONS, SECTION 551 FOR TEST PILE REQUIREMENTS.

18. STRUCTURE EXCAVATION AND BACKFILL: ALL STRUCTURE EXCAVATION (LOCATED AT THE PIER) AND BACKFILL SHALL BE DONE ACCORDING TO FP-03, SECTION 208 – STRUCTURE EXCAVATION AND BACKFILL FOR SELECT MAJOR STRUCTURES. PAYMENT FOR STRUCTURE EXCAVATION AND BACKFILL SHALL BE CONSIDERED INCIDENTAL TO COMPLETION OF THE PIER WALL AND NO ADDITIONAL PAY ITEM WILL BE PROVIDED.

19. CONTRACT SHALL VERIFY: IN THE FIELD ALL DIMENSIONS, ELEVATIONS AND DETAILS WHICH WILL BE INVOLVED IN THE NEW CONSTRUCTION BEFORE PROCEEDING WITH NEW WORK.

20. WELDING; ALL BRIDGE RELATED WELDING SHALL BE IN CONFORMANCE WITH THE AASHTO/AWS D1.5M/D1.5 2008 BRIDGE WELDING CODE, INCLUDING INSPECTION OF ALL WELDS. ANY WELDING (EXCEPT TACK WELDING) ON ANY STRUCTURAL MEMBER (MEMBER DESIGNED TO CARRY OR RESIST TRAFFIC OR PEDESTRIAN LOADS) SHALL BE SUBJECT TO VISUAL INSPECTION AND MAGNETIC PARTICLE TESTING BY AN APPROVED AWS CERTIFIED WELDING INSPECTOR, AND SHALL PASS TESTING PRIOR TO ACCEPTANCE OF THE WORK UNLESS OTHERWISE DIRECTED BY THE AO. ALL LABOR, EQUIPMENT, MATERIALS AND WORK REQUIRED FOR TESTING BY AN AWS CERTIFIED WELDING INSPECTOR SHALL BE MEASURED AND PAID FOR UNDER ITEM 15301-0000. REFER TO SPECIAL CONTRACT REQUIREMENT PARAGRAPH 16(k).

21. PREBORING; BASED ON THE GEOTECHINCAL INVESTIGATION AND BORING LOGS, PREBORING IS ANTICIPATED TO BE NECESSARY TO ATTAIN THE SPECIFIED MINIMUM PENETRATION ELEVATION FOR PIER 1 AND ABUTMENT 2. ABUTMENT 1 MINIMUM PENETRATION ELEVATION SHOULD BE ATTAINABLE BY DRIVING OF PILE THROUGH SOIL. PREBORING SHALL BE IN ACCORDANCE WITH SECTION 551 OF THE FP-03 AND SUPPLEMENTAL SPECIFICATIONS. IF TEST PILE OPERATIONS FOR ABUTMENT 1 INDICATE THAT PREBORING IS NECESSARY FOR ABUTMENT 1, DETAILS AND QUANTITIES SHALL BE DETERMINED AT THAT TIME. FILL PREBORE HOLE VOID WITH A MATERIAL CONFORMING TO THE SPECIFICATIONS AND THAT IS APPROVED IN WRITING BEFORE USE. ALL PREBORING AND ASSOCIATED WORK SHALL BE PAID UNDER BID ITEM 55115-1000, PREBORING.

UNITED STATES
DEPARTMENT OF THE INTERIOR
BUREAU OF INDIAN AFFAIRS
NAVAJO REGION OFFICE * DIVISION OF TRANSPORTATION

BRIDGES NOTES

Designed by:
Drawn by: RCL,CDH Date: 12/11/09
Revised by: CDH Date: 05/17/10
File Name: N46_bridge-notes.dwg

REGION	STATE	RESERVATION	ROUTE	PROJECT NO.	SHEET	TOTAL SHEETS
NAVAJO	NEW MEXICO	NAVAJO	N46	N46(1)1,2&4	15	58

NOTES:
1. SEE SHEETS 17 THROUGH 20 FOR BORE HOLE LOCATIONS AND GEOTECHNICAL DRILL LOGS.
2. SEE SHEETS 21 AND 22 FOR EROSION CONTROL PLAN AND ASSOCIATED DETAILS.
3. SEE SHEETS 38 AND 39 FOR ADDITIONAL SIDEWALK CONSTRUCTION DETAILS.

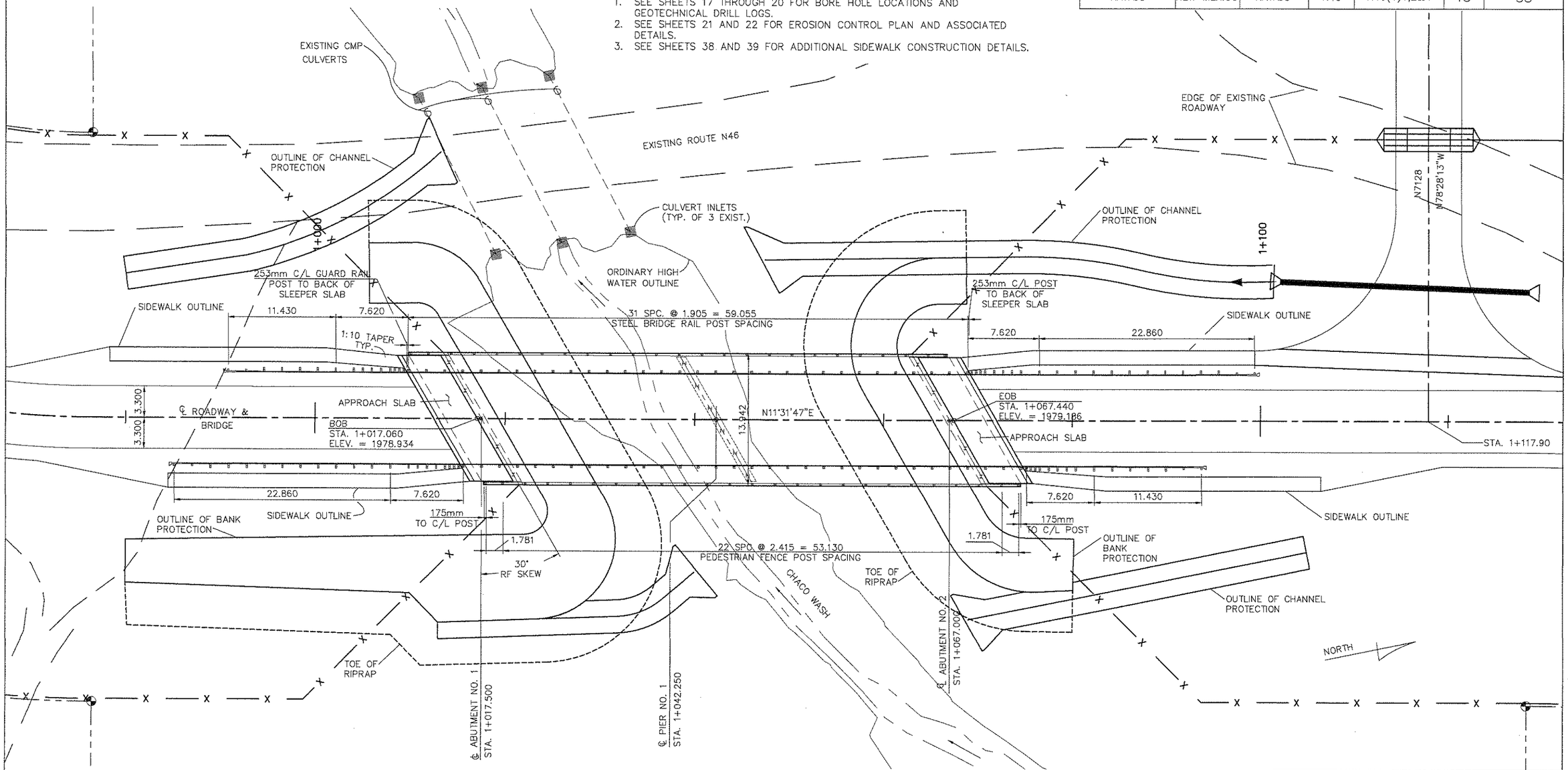

BRIDGE LOCATION PLAN

SCALE 1:200

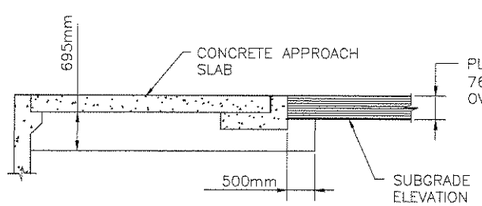

BACKFILL COMPACTION

SCALE = N.T.S.

– ABC COMPACTED IN ACCORDANCE WITH SECTION 301 OF THE FP–03. PLACE ABC FROM WINGWALL TO WINGWALL, AND TO LIMITS SHOWN. THIS WORK TO BE INCIDENTAL TO THE COMPLETION OF THE APPROACH SLABS.

LEGEND

- NEW CONSTRUCTION
- EXISTING FEATURES
- GUARDRAIL
- NEW ROW
- NEW ROW MARKER

UNITED STATES
DEPARTMENT OF THE INTERIOR
BUREAU OF INDIAN AFFAIRS
NAVAJO REGION OFFICE * DIVISION OF TRANSPORTATION

BRIDGE LOCATION PLAN

Designed by:	
Drawn by: RLC, cdh	Date: 11/30/09
Revised by:	Date:
File Name: N46_Bridge–loc.dwg	

REGION	STATE	RESERVATION	ROUTE	PROJECT NO.	SHEET	TOTAL SHEETS
NAVAJO	NEW MEXICO	NAVAJO	N46	N46(1)1,2&4	16	58

GENERAL NOTES:

1. ALL DIMENSIONS ARE IN METERS UNLESS NOTED OTHERWISE.
2. ALL ELEVATIONS SHOWN ARE IN METERS.
3. SLOPE RATIO GIVEN IN VERTICAL : HORIZONTAL FORMAT.

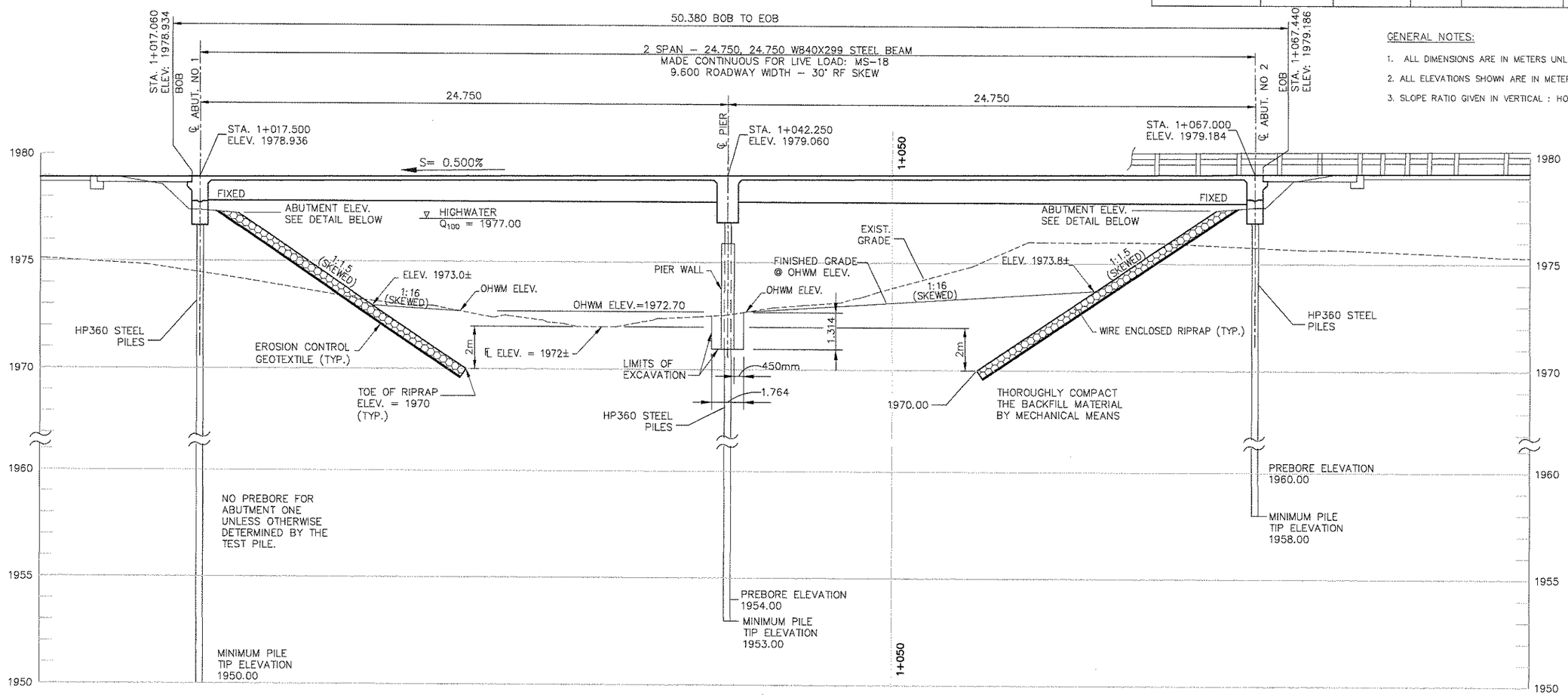

BRIDGE PROFILE ALONG ℄ OF CONSTRUCTION / ROADWAY

SCALE 1:100

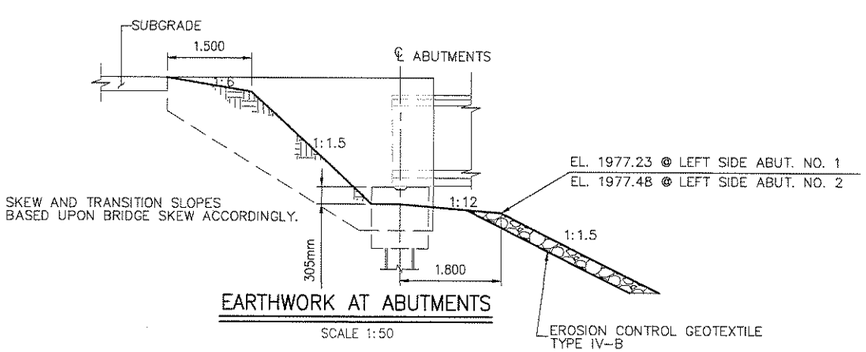

EARTHWORK AT ABUTMENTS

SCALE 1:50

HYDRAULIC DATA

WATERWAY CHACO WASH	
100 YEAR FLOW RATE 270.00 m³/s	500 YEAR FLOW RATE 459.00 m³/s
HW ELEV. 1977.00	HW ELEV. 1977.74m
VELOCITY 2.23 m/s	VELOCITY 2.88m/s
MAX SCOUR DEPTH 5.20m (ABUTMENTS)	MAX SCOUR DEPTH 7.30m (ABUTMENTS)
MAX SCOUR DEPTH 1.07m (PIERS)	MAX SCOUR DEPTH 1.07m (PIERS)
MAX SCOUR DEPTH 0.20m (CONTRACTION)	MAX SCOUR DEPTH 0.27m (CONTRACTION)

UNITED STATES
DEPARTMENT OF THE INTERIOR
BUREAU OF INDIAN AFFAIRS
NAVAJO REGION OFFICE * DIVISION OF TRANSPORTATION

BRIDGE LOCATION PROFILE

Designed by:	
Drawn by: RLC,cdh	Date:12/11/09
Revised by:	Date:
File Name: N46_Bridge-loc-prof.dwg	

REGION	STATE	RESERVATION	ROUTE	PROJECT NO.	SHEET	TOTAL SHEETS
NAVAJO	NEW MEXICO	NAVAJO	N46	N46(1)1,2&4	17	58

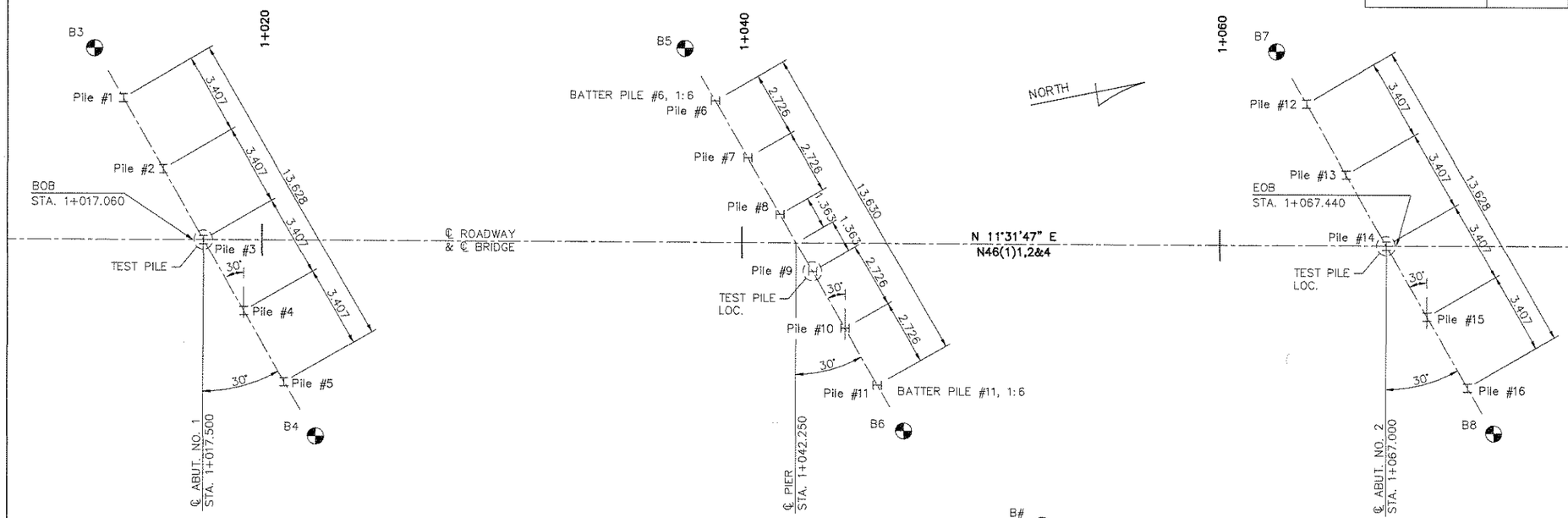

HP–PILE LAYOUT DETAIL PLAN

SCALE = 1:100

BORE HOLE LOCATION

BORE HOLE	ROADWAY ALIGNMENT	NORTHING	EASTING
B3	STA. 1+013 7m Lt.	551473.279	846997.980
B4	STA. 1+021 7m Rt.	551478.319	847013.296
B5	STA. 1+038 7m Lt.	551497.759	847003.048
B6	STA. 1+046 7m Rt.	551502.749	847018.295
B7	STA. 1+063 7m Lt.	551522.270	847007.973
B8	STA. 1+071 7m Rt.	551527.310	847023.290

DRIVEN PILE REQUIREMENTS

LOCATION	PILE TYPE	TEST PILE QUANTITY	PRODUCTION PILE QUANTITY	ESTIMATED LENGTH*	MINIMUM PENETRATION ELEVATION (m)	ESTIMATED PENETRATION ELEVATION (m)	PILE DESIGN LOAD(kN)	ULTIMATE CAPACITY (kN)	PREBORE ELEVATION (m)
ABUTMENT No. 1	HP360X108	1	4	27.1	1950.0	N/A	650	1950	N/A
PIER NO. 1	HP360X108	1	5	24.1	1953.0	N/A	1006	3018	1954.0
ABUTMENT No. 2	HP360X108	1	4	19.3	1958.0	N/A	650	1950	1960.0

* THE 'AVERAGE ESTIMATED LENGTH' INDICATED IN THE DRIVEN PILE REQUIREMENTS TABLE IS FOR ESTIMATING PURPOSES ONLY. THE ACTUAL PILE LENGTHS MAY BE DIFFERENT THAN THOSE INDICATED.

FOUNDATION NOTES

1. PILING SHALL BE AASHTO M 270, GRADE 345. THE SIZE OF PILING SHALL BE HP 360 x 108 H–PILES, AND SHALL BE EQUIPPED WITH A REINFORCED PILE TIP CONFORMING TO ASTM A 148, GRADE 60–90 OR ASTM A 27, GRADE 65–35. THE PILE TIP SHALL BE FREE FROM ANY OBVIOUS DEFECTS AND SHALL BE ACCOMPANIED BY A MILL TEST REPORT STATING THE CHEMICAL AND PHYSICAL PROPERTIES (TENSILE AND YIELD STRENGTHS) OF THE STEEL.
2. PILE TIPS FOR HP PILING SHALL BE REINFORCED.
3. THIS BRIDGE PROJECT INCLUDES TEST PILES. SEE SUPPLEMENTAL SPECIFICATIONS SECTION 551 FOR IMPORTANT DETAILS, INCLUDING DETERMINATION OF PILE LENGTHS REQUIRED FOR THIS PROJECT.
4. APPROVED TEST PILES SHALL BECOME PERMANENT PILES. TEST PILES AND ASSOCIATED WORK WILL BE PAID UNDER BID ITEM 55120–0000.
5. FOR ADDITIONAL NOTES REGARDING PILING, SEE BRIDGE NOTES ON SHEET 14.
6. BASED ON GEOTECHNICAL INVESTIGATIONS AND BORING LOGS PRESENTED IN THESE PLANS, PREBORING WILL BE NECESSARY TO ATTAIN THE MINIMUM PENETRATION ELEVATIONS SHOWN. PREBORING AND ALL ASSOCIATED WORK SHALL BE IN ACCORDANCE WITH SECTION 551 OF THE FP–03 AND SUPPLEMENTAL SPECIFICATIONS. PREBORING IS NOT SPECIFIED FOR ABUTMENT NUMBER 1, HOWEVER, IF THE TEST PILE DOES NOT ATTAIN THE MINIMUM PENETRATION ELEVATION FOR ABUTMENT NUMBER 1, THEN PREBORING MAY BE NECESSARY, AND DETAILS INCLUDING QUANTITIES SHALL BE DETERMINED AFTER THE TEST PILE OPERATIONS FOR ABUTMENT NUMBER 1.

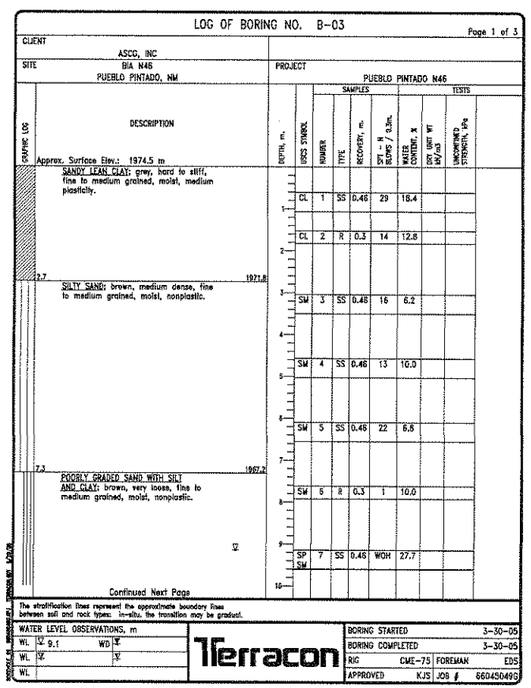

LOG OF BORING NO. B-03 — Page 1 of 3

CLIENT: ASCG, INC
SITE: BIA N46, PUEBLO PINTADO, NM
PROJECT: PUEBLO PINTADO N46

DEPTH, m.	USCS SYMBOL	NUMBER	TYPE	RECOVERY, m.	SPT – N BLOWS / 0.3m.	WATER CONTENT, %	DRY UNIT WT kN/m3	UNCONFINED STRENGTH, kPa
Approx. Surface Elev.: 1974.5 m								
SANDY LEAN CLAY: grey, hard to stiff, fine to medium grained, moist, medium plasticity.								
	CL	1	SS	0.46	29	18.4		
	CL	2	R	0.3	14	12.8		
2.7 — 1971.8								
SILTY SAND: brown, medium dense, fine to medium grained, moist, nonplastic.								
	SM	3	SS	0.46	16	6.2		
	SM	4	SS	0.46	13	10.0		
	SM	5	SS	0.46	22	6.5		
7.3 — 1967.2								
POORLY GRADED SAND WITH SILT AND CLAY: brown, very loose, fine to medium grained, moist, nonplastic.								
	SM	6	R	0.3	1	10.0		
	SP SM	7	SS	0.46	WOH	27.7		

Continued Next Page

The stratification lines represent the approximate boundary lines between soil and rock types; in-situ, the transition may be gradual.

WATER LEVEL OBSERVATIONS, m: WL ▽ 9.1 WD ▽; WL ▽; WL

BORING STARTED 3-30-05; BORING COMPLETED 3-30-05; RIG CME-75; FOREMAN EDS; APPROVED KJS; JOB # 660450499

Terracon

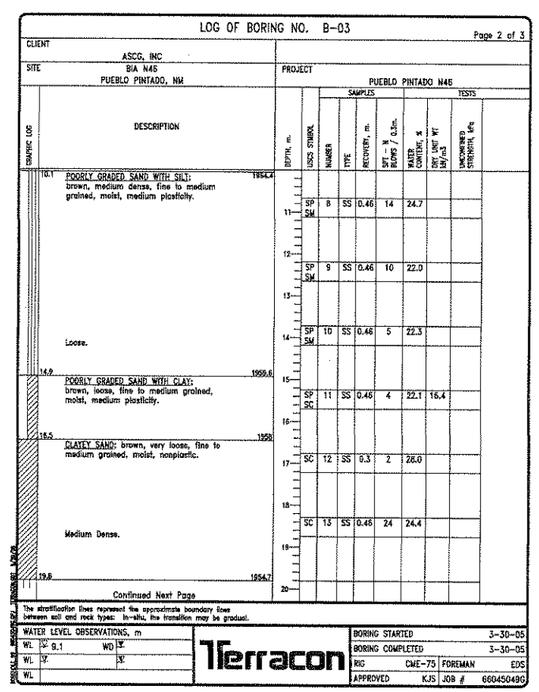

LOG OF BORING NO. B-03 — Page 2 of 3

CLIENT: ASCG, INC
SITE: BIA N45, PUEBLO PINTADO, NM
PROJECT: PUEBLO PINTADO N46

DEPTH, m.	USCS SYMBOL	NUMBER	TYPE	RECOVERY, m.	SPT – N BLOWS / 0.3m.	WATER CONTENT, %	DRY UNIT WT kN/m3	UNCONFINED STRENGTH, kPa
10.1 — POORLY GRADED SAND WITH SILT: brown, medium dense, fine to medium grained, moist, medium plasticity. — 1964.4								
	SP SM	8	SS	0.46	14	24.7		
Loose.	SP SM	9	SS	0.46	10	22.0		
	SP SM	10	SS	0.46	5	22.3		
14.9 — POORLY GRADED SAND WITH CLAY: brown, loose, fine to medium grained, moist, medium plasticity. — 1959.6								
	SP SC	11	SS	0.46	4	22.1	16.4	
16.5 — CLAYEY SAND: brown, very loose, fine to medium grained, moist, nonplastic. — 1958								
	SC	12	SS	0.3	2	26.0		
Medium Dense.	SC	13	SS	0.46	24	24.4		
19.8 — 1954.7								

Continued Next Page

The stratification lines represent the approximate boundary lines between soil and rock types; in-situ, the transition may be gradual.

WATER LEVEL OBSERVATIONS, m: WL ▽ 9.1 WD ▽; WL ▽; WL

BORING STARTED 3-30-05; BORING COMPLETED 3-30-05; RIG CME-75; FOREMAN EDS; APPROVED KJS; JOB # 660450499

Terracon

UNITED STATES
DEPARTMENT OF THE INTERIOR
BUREAU OF INDIAN AFFAIRS
NAVAJO REGION OFFICE * DIVISION OF TRANSPORTATION

PILE LAYOUT AND BORING LOGS

Designed by: Terracon
Drawn by: BC, cdh Date: 12/11/09
Revised by: Date:
File Name: N46_Bore_Logs.dwg

REGION	STATE	RESERVATION	ROUTE	PROJECT NO.	SHEET	TOTAL SHEETS
NAVAJO	NEW MEXICO	NAVAJO	N46	N46(1)1,2&4	18	58

LOG OF BORING NO. B-03

Page 3 of 3

CLIENT: ASCG, INC
SITE: BIA N46, PUEBLO PINTADO, NM
PROJECT: PUEBLO PINTADO N46

DESCRIPTION	DEPTH, m.	USCS SYMBOL	SAMPLES NUMBER	TYPE	RECOVERY, m.	SPT – N BLOWS / 0.3m.	TESTS WATER CONTENT, %	DRY UNIT WT kN/m3	UNCONFINED STRENGTH, kPa
SILTY SAND WITH SHALE AND GRAVEL: grey, very dense, coarse to fine grained, moist, nonplastic.		SM	14	SS	0.3	56	15.3		
	21								
		SM	15	SS	0.25	50/.07	22.1		
	22								
22.6 — 1951.9									
Auger Refusal At 22.6 Meters. SHALE: moderately soft to moderately hard brown fairly continuous shale with interbedded siltstone.	23		16 NX	C	82%	RQD 55%			
	24		17 NX	C	100%	RQD 50%			
	25								
	26		18 NX	C	97%	RQD 73%			
	27		19 NX	C	90%	RQD 60%			
	28								
28.7 — 1945.8									
Coring Terminated At 28.7 Meters.									

The stratification lines represent the approximate boundary lines between soil and rock types: in-situ, the transition may be gradual.

WATER LEVEL OBSERVATIONS, m: WL ▽ 9.1 WD ▽; WL ▽; WL ▽; WL

BORING STARTED 3-30-05
BORING COMPLETED 3-30-05
RIG CME-75 FOREMAN EDS
APPROVED KJS JOB # 660450496

Terracon

LOG OF BORING NO. B-04

Page 1 of 4

CLIENT: ASCG, INC
SITE: BIA N46, PUEBLO PINTADO, NM
PROJECT: PUEBLO PINTADO N46

DESCRIPTION	DEPTH, m.	USCS SYMBOL	SAMPLES NUMBER	TYPE	RECOVERY, m.	SPT – N BLOWS / 0.3m.	TESTS WATER CONTENT, %	DRY UNIT WT kN/m3	UNCONFINED STRENGTH, kPa
Approx. Surface Elev.: 1972.4 m									
SANDY SILT WITH CLAY: brown, stiff, fine to medium grained, moist, low plasticity.		ML	1	SS	0.38	7	16.3		
	1								
Very Stiff.		ML	2	SS	0.46	14	8.2		
	2								
	3	ML	3	SS	0.46	15	8.7		
	4								
4.6 — 1967.8									
SILTY SAND: brown, medium dense, fine to medium grained, moist, nonplastic.	5	ML	4	SS	0.3	14	9.4		
	6								
6.1 — 1966.3									
POORLY GRADED SAND WITH SILT: brown, medium dense, fine to medium grained, moist, nonplastic.		SP SM	5	SS	0.46	17	4.7		
	7								
	8	SP SM	6	R	0.3	19	24.2	16.1	
8.5 — 1963.8									
SANDY LEAN CLAY: brown, stiff, fine to medium grained, moist, medium plasticity.	9	CL	7	SS	0.25	8	24.0		
	10								

Continued Next Page

The stratification lines represent the approximate boundary lines between soil and rock types: in-situ, the transition may be gradual.

WATER LEVEL OBSERVATIONS, m: WL ▽ 8.2 WD ▽; WL ▽; WL ▽; WL

BORING STARTED 3-29-05
BORING COMPLETED 3-29-05
RIG CME-75 FOREMAN JSM
APPROVED KJS JOB # 660450496

Terracon

LOG OF BORING NO. B-04

Page 2 of 4

CLIENT: ASCG, INC
SITE: BIA N46, PUEBLO PINTADO, NM
PROJECT: PUEBLO PINTADO N46

DESCRIPTION	DEPTH, m.	USCS SYMBOL	SAMPLES NUMBER	TYPE	RECOVERY, m.	SPT – N BLOWS / 0.3m.	TESTS WATER CONTENT, %	DRY UNIT WT kN/m3	UNCONFINED STRENGTH, kPa
SANDY LEAN CLAY: brown, stiff, fine to medium grained, moist, medium plasticity.									
Hard.	11	CL	8	SS	0.46	28	20.3		
12.2 — 1960.2									
POORLY GRADED SAND WITH SILT AND CLAY: brown, loose, fine to medium grained, moist, low plasticity.	12	SP SM	9	R	0.3	8	21.2	18.4	
13.7 — 1958.5									
FAT CLAY: brown, very stiff, fine to medium grained, moist, high plasticity.	13	CH	10	SS	0.38	17	25.0		
15.2 — 1957.1									
SILTY SAND WITH CLAY: brown, loose, fine to medium grained, moist, low plasticity.	14	SM	11	R	0.3	7	28.1		
16.8 — 1955.5									
SANDY LEAN CLAY: brown, loose, fine to medium grained, moist, low plasticity.	15	CL	12	SS	0.46	6	35.1		
18.3 — 1954.1									
POORLY GRADED SAND WITH SILT: brown, medium dense, fine to medium grained, moist, nonplastic.	16	SP SM	13	SS	0.46	19	22.5		
	17								
	18								
	19								
	20								

Continued Next Page

The stratification lines represent the approximate boundary lines between soil and rock types: in-situ, the transition may be gradual.

WATER LEVEL OBSERVATIONS, m: WL ▽ 8.2 WD ▽; WL ▽; WL ▽; WL

BORING STARTED 3-29-05
BORING COMPLETED 3-29-05
RIG CME-75 FOREMAN JSM
APPROVED KJS JOB # 660450496

Terracon

LOG OF BORING NO. B-04

Page 3 of 4

CLIENT: ASCG, INC
SITE: BIA N46, PUEBLO PINTADO, NM
PROJECT: PUEBLO PINTADO N46

DESCRIPTION	DEPTH, m.	USCS SYMBOL	SAMPLES NUMBER	TYPE	RECOVERY, m.	SPT – N BLOWS / 0.3m.	TESTS WATER CONTENT, %	DRY UNIT WT kN/m3	UNCONFINED STRENGTH, kPa
POORLY GRADED SAND WITH SILT: brown, medium dense, fine to medium grained, moist, nonplastic.		SP SM	14	SS	0.46	14	19.6		
	21								
		SP SM	15	SS	0.46	16	20.5		
	22								
22.9 — 1949.5									
SILTY SAND: brown, very dense, fine to medium grained, moist, nonplastic.	23	SM	16	SS	0.46	82	17.8		
	24								
	25	SM	17	SS	0.08	50/.07	8.7		
	26	SM	18	SS	0.05	50/.05	10.5		
	27								
	28	SM	19	SS	0.08	50/.07	7.5		
	29	SM	20	SS	0.46	50/.1	7.2		
	30								

Continued Next Page

The stratification lines represent the approximate boundary lines between soil and rock types: in-situ, the transition may be gradual.

WATER LEVEL OBSERVATIONS, m: WL ▽ 8.2 WD ▽; WL ▽; WL ▽; WL

BORING STARTED 3-29-05
BORING COMPLETED 3-29-05
RIG CME-75 FOREMAN JSM
APPROVED KJS JOB # 660450496

Terracon

LOG OF BORING NO. B-04

Page 4 of 4

CLIENT: ASCG, INC
SITE: BIA N46, PUEBLO PINTADO, NM
PROJECT: PUEBLO PINTADO N46

DESCRIPTION	DEPTH, m.	USCS SYMBOL	SAMPLES NUMBER	TYPE	RECOVERY, m.	SPT – N BLOWS / 0.3m.	TESTS WATER CONTENT, %	DRY UNIT WT kN/m3	UNCONFINED STRENGTH, kPa
SILTY SAND: brown, very dense, fine to medium grained, moist, nonplastic.		SM	21	SS	0.25	50/.07	7.6		
30.8 — 1941.4									
Boring Terminated At 30.9 Meters.									

The stratification lines represent the approximate boundary lines between soil and rock types: in-situ, the transition may be gradual.

WATER LEVEL OBSERVATIONS, m: WL ▽ 8.2 WD ▽; WL ▽; WL ▽; WL

BORING STARTED 3-29-05
BORING COMPLETED 3-29-05
RIG CME-75 FOREMAN JSM
APPROVED KJS JOB # 660450496

Terracon

LOG OF BORING NO. B-05

Page 1 of 3

CLIENT: ASCG, INC
SITE: BIA N45, PUEBLO PINTADO, NM
PROJECT: PUEBLO PINTADO N46

DESCRIPTION	DEPTH, m.	USCS SYMBOL	SAMPLES NUMBER	TYPE	RECOVERY, m.	SPT – N BLOWS / 0.3m.	TESTS WATER CONTENT, %	DRY UNIT WT kN/m3	UNCONFINED STRENGTH, kPa
Approx. Surface Elev.: 1971.4 m									
SILTY SAND: brown, loose, fine to medium grained, moist, nonplastic.		SM	1	SS	0.38	8			
	1								
		SM	2	SS	0.46	8			
	2								
2.7 — 1968.7									
LEAN CLAY WITH SAND: brown, medium dense, fine to medium grained, moist, low to medium plasticity.	3	CL	3	SS	0.46	26			
	4	CL	4	SS	0.46	38			
5.5 — 1966									
SILTY SAND WITH SHALE: brown, very dense, medium to fine grained, moist, nonplastic to medium plasticity.	5	SC SM	5	SS	0	50/.05			
	6								
	7	SC SM	6	SS	0	50/.0			
	8								
	9	SC SM	7	SS	0	50/.0			
	10								

Continued Next Page

The stratification lines represent the approximate boundary lines between soil and rock types: in-situ, the transition may be gradual.

WATER LEVEL OBSERVATIONS, m: WL ▽ NONE ▽; WL ▽; WL ▽; WL

BORING STARTED 4-14-05
BORING COMPLETED 4-14-05
RIG CME-75 FOREMAN JSM
APPROVED KJS JOB # 660450496

Terracon

LOG OF BORING NO. B-05

Page 2 of 3

CLIENT: ASCG, INC
SITE: BIA N45, PUEBLO PINTADO, NM
PROJECT: PUEBLO PINTADO N46

DESCRIPTION	DEPTH, m.	USCS SYMBOL	SAMPLES NUMBER	TYPE	RECOVERY, m.	SPT – N BLOWS / 0.3m.	TESTS WATER CONTENT, %	DRY UNIT WT kN/m3	UNCONFINED STRENGTH, kPa
SILTY SAND WITH SHALE: brown, very dense, medium to fine grained, moist, nonplastic to medium plasticity.									
	11	SC SM	8	SS	0	50/.0			
	12	SC SM	9	SS	0	50/.0			
	13	SC SM	10	SS	0	50/.0			
	14	SC SM	11	SS	0	50/.0			
	15								
	16	SC SM	12	SS	0	50/.0			
	17								
	18	SC SM	13	SS	0	50/.0			
18.8 — 1952.9									
Boring Terminated At 18.8 Meters. SHALE: moderately soft to moderately hard brown fairly continuous shale with interbedded siltstone.	19		14 NX	C	87%	RQD 11%			
	20								

Continued Next Page

The stratification lines represent the approximate boundary lines between soil and rock types: in-situ, the transition may be gradual.

WATER LEVEL OBSERVATIONS, m: WL ▽ NONE ▽; WL ▽; WL ▽; WL

BORING STARTED 4-14-05
BORING COMPLETED 4-14-05
RIG CME-75 FOREMAN JSM
APPROVED KJS JOB # 660450496

Terracon

UNITED STATES
DEPARTMENT OF THE INTERIOR
BUREAU OF INDIAN AFFAIRS
NAVAJO REGION OFFICE * DIVISION OF TRANSPORTATION

BORING LOG 2

Designed by: Terracon
Drawn by: BC Date: 05-05
Revised by: Date:
File Name: N46_Bore_Logs.dwg

REGION	STATE	RESERVATION	ROUTE	PROJECT NO.	SHEET	TOTAL SHEETS
NAVAJO	NEW MEXICO	NAVAJO	N46	N46(1)1,2&4	19	58

LOG OF BORING NO. B-05

Page 3 of 3

CLIENT: ASCG, INC
SITE: BIA N46, PUEBLO PINTADO, NM
PROJECT: PUEBLO PINTADO N46

DESCRIPTION	DEPTH, m.	USCS SYMBOL	SAMPLES NUMBER	TYPE	RECOVERY, m.	SPT – N BLOWS / 0.3m.	TESTS WATER CONTENT, %	DRY UNIT WT kN/m3	UNCONFINED STRENGTH, kPa
Boring Terminated At 18.6 Meters. SHALE: moderately soft to moderately hard brown fairly continuous shale with interbedded siltstone.	21		15 NX	C	88%	RQD 47%			
	22		16 NX	C	97%	RQD 57%			
	23		17 NX	C	97%	RQD 57%			
24.7 1945.8 Coring Terminated At 24.7 Meters.	24								

The stratification lines represent the approximate boundary lines between soil and rock types: in-situ, the transition may be gradual.

WATER LEVEL OBSERVATIONS, m: WL ▽ NONE ▼; WL ▽ ▽; WL ▽ ▽; WL

Terracon

BORING STARTED 4-14-05
BORING COMPLETED 4-14-05
RIG CME-75 FOREMAN JSM
APPROVED KJS JOB # 660450496

LOG OF BORING NO. B-06

Page 1 of 3

CLIENT: ASCG, INC
SITE: BIA N46, PUEBLO PINTADO, NM
PROJECT: PUEBLO PINTADO N46

DESCRIPTION	DEPTH, m.	USCS SYMBOL	SAMPLES NUMBER	TYPE	RECOVERY, m.	SPT – N BLOWS / 0.3m.	TESTS WATER CONTENT, %	DRY UNIT WT kN/m3	UNCONFINED STRENGTH, kPa
Approx. Surface Elev.: 1972.4 m. POORLY GRADED SAND WITH SILT: brown, loose, fine to medium grained, moist, nonplastic.	1	SP SM	1	SS	0.46	6	6.8		
1.5 1970.9 SANDY LEAN CLAY: brown, stiff, fine to medium grained, moist, low to medium plasticity.	2	CL	2	SS	0.46	7	30.3		
3 1969.3 SANDSTONE: brown, fine to medium grained, moist/dry nonplastic.	3	SP SM	3	SS	0.15	50/.15	5.6		
4.6 1967.8 CLAYEY SAND: brown, very dense, fine to medium grained, moist, nonplastic.	4	SC	4	SS	0.3	50/.15	11.9		
Dense.	5	SC	5	SS	0.46	42	13.8		
Very Dense.	6	SC	6	SS	0.3	50/.15	12.3		
	7	SC	7	SS	0.15	50/.15	9.7		

Continued Next Page

The stratification lines represent the approximate boundary lines between soil and rock types: in-situ, the transition may be gradual.

WATER LEVEL OBSERVATIONS, m: WL ▽ NONE ▼; WL ▽ ▽; WL ▽ ▽; WL

Terracon

BORING STARTED 4-13-05
BORING COMPLETED 4-13-05
RIG CME-75 FOREMAN JSM
APPROVED KJS JOB # 660450496

LOG OF BORING NO. B-06

Page 2 of 3

CLIENT: ASCG, INC
SITE: BIA N46, PUEBLO PINTADO, NM
PROJECT: PUEBLO PINTADO N46

DESCRIPTION	DEPTH, m.	USCS SYMBOL	SAMPLES NUMBER	TYPE	RECOVERY, m.	SPT – N BLOWS / 0.3m.	TESTS WATER CONTENT, %	DRY UNIT WT kN/m3	UNCONFINED STRENGTH, kPa
CLAYEY SAND: brown, very dense, fine to medium grained, moist, nonplastic.									
10.7 1961.7 CLAYSTONE: brown, hard, fine to medium grained, moist, medium to hard plasticity.	11	CH	8	SS	0.1	50/.1	11.0		
	12	CH	9	SS	0.15	50/.15	7.1		
	14	CH	10	SS	0.15	50/.15	9.3		
	15	CH	11	SS	0	50/.02			
16.2 1956.2 Auger Refusal At 16.2 Meters. SHALE: moderately soft to moderately hard brown fairly continuous shale with interbedded siltstone.	16	NX		C	95%	RQD 77%			
	18	NX		C	81%	RQD 77%			
	19	NX		C	84%	RQD 50%			
	20								

Continued Next Page

The stratification lines represent the approximate boundary lines between soil and rock types: in-situ, the transition may be gradual.

WATER LEVEL OBSERVATIONS, m: WL ▽ NONE ▼; WL ▽ ▽; WL ▽ ▽; WL

Terracon

BORING STARTED 4-13-05
BORING COMPLETED 4-13-05
RIG CME-75 FOREMAN JSM
APPROVED KJS JOB # 660450496

LOG OF BORING NO. B-06

Page 3 of 3

CLIENT: ASCG, INC
SITE: BIA N46, PUEBLO PINTADO, NM
PROJECT: PUEBLO PINTADO N46

DESCRIPTION	DEPTH, m.	USCS SYMBOL	SAMPLES NUMBER	TYPE	RECOVERY, m.	SPT – N BLOWS / 0.3m.	TESTS WATER CONTENT, %	DRY UNIT WT kN/m3	UNCONFINED STRENGTH, kPa
Auger Refusal At 18.2 Meters. SHALE: moderately soft to moderately hard brown fairly continuous shale with interbedded siltstone.	21		NX	C	83%	RQD 72%			
22.3 1950.1 Coring Terminated At 22.3 Meters.	22								

The stratification lines represent the approximate boundary lines between soil and rock types: in-situ, the transition may be gradual.

WATER LEVEL OBSERVATIONS, m: WL ▽ NONE ▼; WL ▽ ▽; WL ▽ ▽; WL

Terracon

BORING STARTED 4-13-05
BORING COMPLETED 4-13-05
RIG CME-75 FOREMAN JSM
APPROVED KJS JOB # 660450496

LOG OF BORING NO. B-07

Page 1 of 3

CLIENT: ASCG, INC
SITE: BIA N46, PUEBLO PINTADO, NM
PROJECT: PUEBLO PINTADO N46

DESCRIPTION	DEPTH, m.	USCS SYMBOL	SAMPLES NUMBER	TYPE	RECOVERY, m.	SPT – N BLOWS / 0.3m.	TESTS WATER CONTENT, %	DRY UNIT WT kN/m3	UNCONFINED STRENGTH, kPa
Approx. Surface Elev.: 1973.4 m. SILTY SAND: brown, very loose, fine to medium grained, moist, nonplastic.	1	SM	1	SS	0.46	2	15.6		
1.5 1973.9 POORLY GRADED SAND WITH SILT: brown, loose, fine to medium grained, moist, nonplastic.	2	SP SM	2	SS	0.46	7	17.4		
Dense.	3	SP SM	3	SS	0.46	34	14.8		
Very Dense.	4	SP SM	4	SS	0.15	50/.13	11.4		
	5	SP SM	5	SS	0.46	61	15.8		
	6	SP SM	6	SS	0.46	73	13.1		
9.1 1966.3 SANDY LEAN CLAY WITH GRAVEL: brown, very dense, coarse to fine grained, moist, low plasticity.	7	CL	7	SS	0.46	50/.13	10.3		

Continued Next Page

The stratification lines represent the approximate boundary lines between soil and rock types: in-situ, the transition may be gradual.

WATER LEVEL OBSERVATIONS, m: WL ▽ NONE ▼; WL ▽ ▽; WL ▽ ▽; WL

Terracon

BORING STARTED 3-31-05
BORING COMPLETED 3-31-05
RIG CME-75 FOREMAN EDS
APPROVED KJS JOB # 660450496

LOG OF BORING NO. B-07

Page 2 of 3

CLIENT: ASCG, INC
SITE: BIA N46, PUEBLO PINTADO, NM
PROJECT: PUEBLO PINTADO N46

DESCRIPTION	DEPTH, m.	USCS SYMBOL	SAMPLES NUMBER	TYPE	RECOVERY, m.	SPT – N BLOWS / 0.3m.	TESTS WATER CONTENT, %	DRY UNIT WT kN/m3	UNCONFINED STRENGTH, kPa
SANDY LEAN CLAY WITH GRAVEL: brown, very dense, coarse to fine grained, moist, low plasticity.	11	CL	8	SS	0.46	50/.18	9.3		
12.2 1963.2 CLAYSTONE: grey, very dense, fine to medium dense, moist, nonplastic.	12	CH	9	SS	0.3	50/.13	9.4		
	14	CH	10	SS	0.3	50/.13	9.2		
	15	CH	11	SS	0.3	50/.1	8.4		
16.5 1958.9 Auger Refusal At 16.5 Meters. SHALE: Moderately soft to moderately hard brown fairly continuous shale with interbedded siltstone.	17	NX		C	100%	RQD 58%			
	18	NX		C	97%	RQD 82%			
	20	NX		C	100%	RQD 94%			

Continued Next Page

The stratification lines represent the approximate boundary lines between soil and rock types: in-situ, the transition may be gradual.

WATER LEVEL OBSERVATIONS, m: WL ▽ NONE ▼; WL ▽ ▽; WL ▽ ▽; WL

Terracon

BORING STARTED 3-31-05
BORING COMPLETED 3-31-05
RIG CME-75 FOREMAN EDS
APPROVED KJS JOB # 660450496

UNITED STATES
DEPARTMENT OF THE INTERIOR
BUREAU OF INDIAN AFFAIRS
NAVAJO REGION OFFICE * DIVISION OF TRANSPORTATION

BORING LOG 3

Designed by: Terracon		
Drawn by: BC	Date: 05-05	
Revised by:	Date:	
File Name: N46_Bore_Logs.dwg		

REGION	STATE	RESERVATION	ROUTE	PROJECT NO.	SHEET	TOTAL SHEETS
NAVAJO	NEW MEXICO	NAVAJO	N46	N46(1)1,2&4	20	58

LOG OF BORING NO. B-07

Page 3 of 3

CLIENT: ASCG, INC
SITE: BIA N46, PUEBLO PINTADO, NM
PROJECT: PUEBLO PINTADO N46

GRAPHIC LOG	DESCRIPTION	DEPTH, m.	USCS SYMBOL	SAMPLES NUMBER	TYPE	RECOVERY, m.	SPT – N BLOWS / 0.3m.	TESTS WATER CONTENT, %	DRY UNIT WT kN/m3	UNCONFINED STRENGTH, kPa
	Auger Refusal At 16.5 Meters. SHALE: Moderately soft to moderately hard brown fairly continuous shale with interbedded siltstone.	21								
		23								
	22.6 — 1952.9									
	Coring Terminated At 22.6 Meters.									

The stratification lines represent the approximate boundary lines between soil and rock types: in-situ, the transition may be gradual.

WATER LEVEL OBSERVATIONS, m: WL ▽ NONE ▽; WL ▽ ▽; WL ▽ ▽; WL

Terracon

BORING STARTED 3-31-05
BORING COMPLETED 3-31-05
RIG CME-75 FOREMAN EDS
APPROVED KJS JOB # 66045049G

LOG OF BORING NO. B-08

Page 1 of 2

CLIENT: ASCG, INC
SITE: BIA N46, PUEBLO PINTADO, NM
PROJECT: PUEBLO PINTADO N46

GRAPHIC LOG	DESCRIPTION	DEPTH, m.	USCS SYMBOL	SAMPLES NUMBER	TYPE	RECOVERY, m.	SPT – N BLOWS / 0.3m.	TESTS WATER CONTENT, %	DRY UNIT WT kN/m3	UNCONFINED STRENGTH, kPa
	Approx. Surface Elev.: 1975.4 m. SILTY CLAY: brown, medium stiff, fine to medium grained, low to medium plasticity.	1	CL ML	1	SS	0.46	6	20.6		
		2	CL ML	2	SS	0.46	9	23.0		
	2.1 — 1973.3 CLAYSTONE: brown, hard, fine to medium grained, moist, medium to hard plasticity.	3	CH	3	SS	0.46	42	20.4		
		4	CH	4	SS	0.46	50/.15	14.8		
		5	CH	5	SS	0.46	51	18.0		
		6	CH	6	SS	0.43	41	15.2		
		7	CH	7	SS	0.15	50/.13	14.5		
	Continued Next Page	10								

The stratification lines represent the approximate boundary lines between soil and rock types: in-situ, the transition may be gradual.

WATER LEVEL OBSERVATIONS, m: WL ▽ NONE ▽; WL ▽ ▽; WL ▽ ▽; WL

Terracon

BORING STARTED 4-13-05
BORING COMPLETED 4-13-05
RIG CME-75 FOREMAN JSM
APPROVED KJS JOB # 66045049G

LOG OF BORING NO. B-08

Page 2 of 2

CLIENT: ASCG, INC
SITE: BIA N46, PUEBLO PINTADO, NM
PROJECT: PUEBLO PINTADO N46

GRAPHIC LOG	DESCRIPTION	DEPTH, m.	USCS SYMBOL	SAMPLES NUMBER	TYPE	RECOVERY, m.	SPT – N BLOWS / 0.3m.	TESTS WATER CONTENT, %	DRY UNIT WT kN/m3	UNCONFINED STRENGTH, kPa
	CLAYSTONE: brown, hard, fine to medium grained, moist, medium to hard plasticity.	11	CH	8	SS	0.13	50/.15	9.7		
		12	CH	9	SS	0.05	50/.13	9.5		
	13.1 — 1962.3 Auger Refusal At 13.1 Meters. SHALE: moderately soft to moderately hard brown fairly continuous shale with interbedded siltstone.	13		NX	C	64%	RQD 21%			
		14								
		15		NX	C	93%	RQD 52%			
		16								
		17		NX	C	89%	RQD 80%			
		18		NX	C	87%	RQD 42%			
	19.2 — 1956.2 Coring Terminated At 19.2 Meters.	19								

The stratification lines represent the approximate boundary lines between soil and rock types: in-situ, the transition may be gradual.

WATER LEVEL OBSERVATIONS, m: WL ▽ NONE ▽; WL ▽ ▽; WL ▽ ▽; WL

Terracon

BORING STARTED 4-13-05
BORING COMPLETED 4-13-05
RIG CME-75 FOREMAN JSM
APPROVED KJS JOB # 66045049G

UNITED STATES
DEPARTMENT OF THE INTERIOR
BUREAU OF INDIAN AFFAIRS
NAVAJO REGION OFFICE * DIVISION OF TRANSPORTATION

BORING LOG 4

Designed by: Terracon	
Drawn by: BC	Date: 05-05
Revised by:	Date:
File Name: N46_Bore_Logs.dwg	

REGION	STATE	RESERVATION	ROUTE	PROJECT NO.	SHEET	TOTAL SHEETS
NAVAJO	NEW MEXICO	NAVAJO	N46	N46(1)1,2&4	21	58

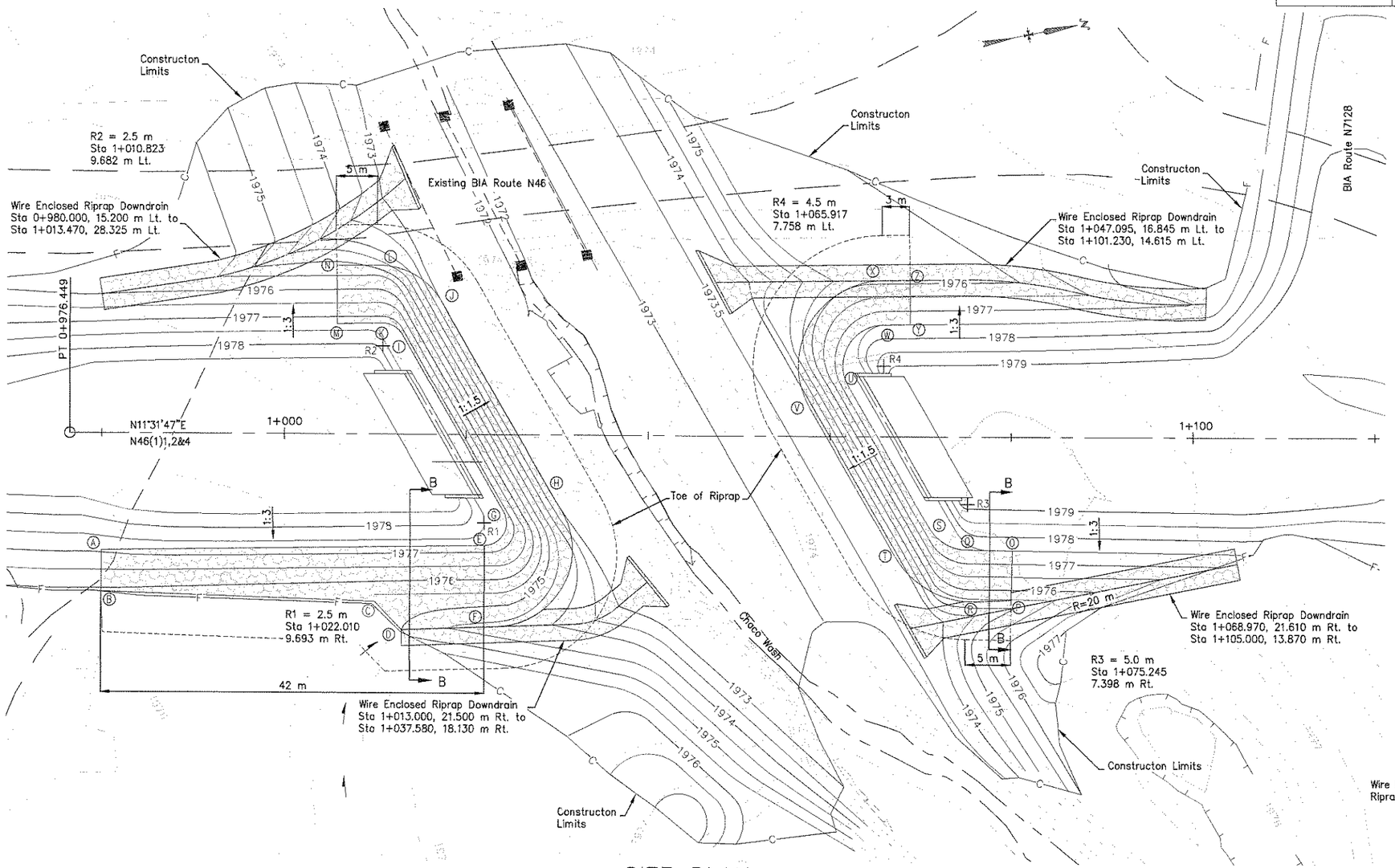

SITE PLAN

SCALE=1:250

LEGEND

Existing Contour

Proposed Contour

Wire Enclosed Riprap

EROSION CONTROL NOTES

1. Workmanship and Materials Shall Conform to The Standard Specification For Construction of Roads and Bridges on Federal Highway Projects (FP-03).
2. All Stone For Riprap Shall Be Class 2 Meeting the Grading Requirements of Table 705-1 of FP-03.
3. All Excavations and Backfill Operations Shall Be Done to Neat Lines in Accordance with Section 209 of FP-03 and Shall Be Incidental to Installation of Riprap. See the Supplemental Specifications for Additional Requirements.
4. Any Borrow Material Needed to Bring Existing Channels Up to Grade Shall Be Incidental to Item 25101-2000 or 25112-2000.
5. See Sheet 22 For Additional Wire Enclosed Riprap Details.
6. See Sheet 22 For Riprap Downdrain Details.

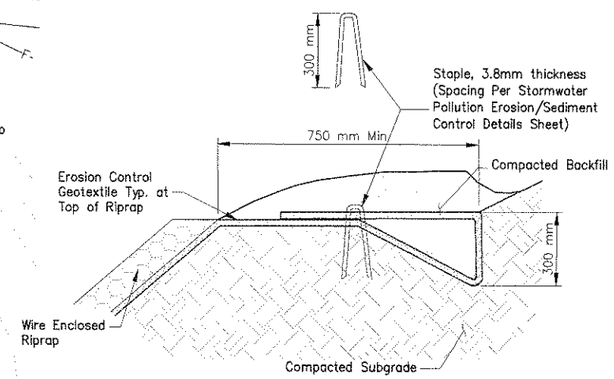

EROSION CONTROL GEOTEXTILE KEY DETAIL @ TOP OF RIPRAP

N.T.S.

NOTE: Fabricate Staple with 3.8 mm Diameter Wire Conforming to AASHTO A641.

WIRE ENCLOSED RIPRAP LAYOUT POINTS FOR ABUTMENT PROTECTION

POINT	STATION	OFFSET	POINT	STATION	OFFSET	POINT	STATION	OFFSET	POINT	STATION	OFFSET
A	0+980.000	12.875 Rt.	J	1+012.988	10.932 Lt.	G	1+075.170	12.397 Rt.	Y	1+068.850	12.303 Lt.
B	0+980.000	17.400 Rt.	J	1+017.318	14.534 Lt.	R	1+076.375	18.085 Rt.	Z	1+068.850	17.172 Lt.
C	1+010.000	18.400 Rt.	K	1+010.786	12.182 Lt.	S	1+070.915	9.898 Rt.			
D	1+013.000	21.500 Rt.	L	1+010.270	18.532 Lt.	T	1+067.095	13.022 Rt.			
E	1+022.050	12.193 Rt.	M	1+005.787	12.107 Lt.	U	1+062.020	5.508 Lt.			
F	1+023.495	21.110 Rt.	N	1+005.787	18.465 Lt.	V	1+057.802	3.073 Lt.			
G	1+024.175	8.443 Rt.	O	1+080.169	12.473 Rt.	W	1+065.850	12.258 Lt.			
H	1+030.540	8.367 Rt.	P	1+080.169	17.900 Rt.	X	1+065.776	17.127 Lt.			

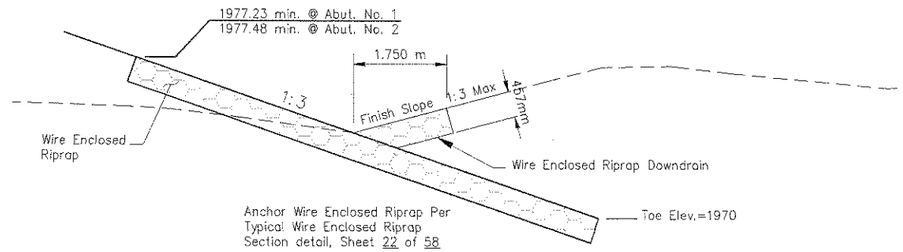

SECTION B-B

N.T.S.

UNITED STATES
DEPARTMENT OF THE INTERIOR
BUREAU OF INDIAN AFFAIRS
NAVAJO REGION OFFICE * DIVISION OF TRANSPORTATION

EROSION CONTROL PLAN

Designed by: RDL

Drawn by: RDL Date: 05-05

Revised by: Date:

File Name: N46_Erosion Control Plan

REGION	STATE	RESERVATION	ROUTE	PROJECT NO.	SHEET	TOTAL SHEETS
NAVAJO	NEW MEXICO	NAVAJO	N46	N46(1)1,2&4	22	58

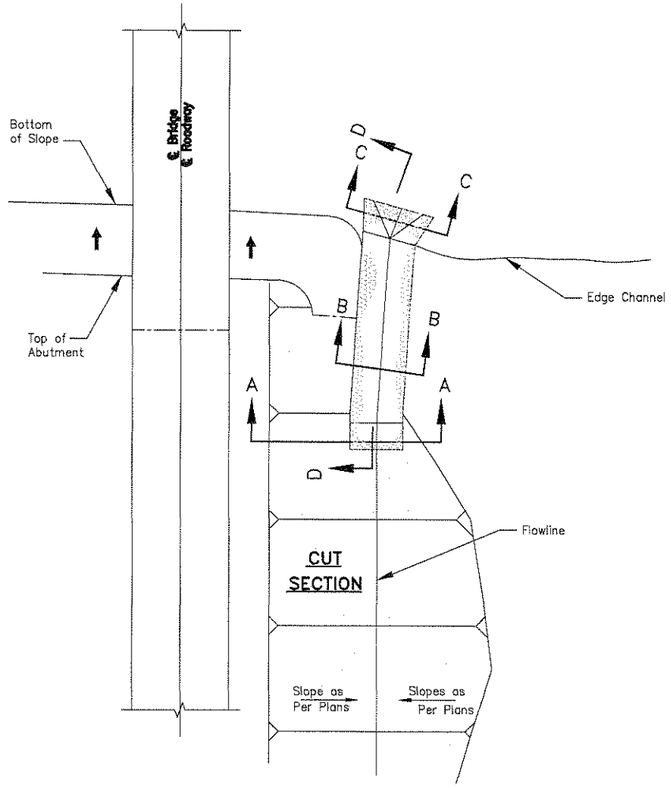

PLAN VIEW

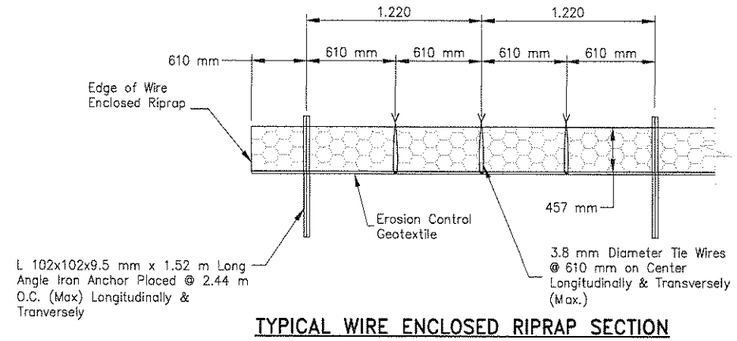

TYPICAL WIRE ENCLOSED RIPRAP SECTION
N.T.S.

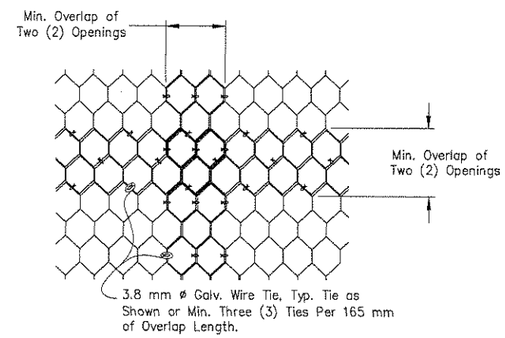

FABRIC SPLICING DETAIL
N.T.S.

WIRE ENCLOSED RIPRAP NOTES

1. Wire Enclosed Riprap Shall Conform to Section 251 of FP-03, the Supplemental Specifications, and the Details Shown in These Construction Plans. Wire Mesh Shall Be Placed To Enclose The Stone Layer On All Sides And Faces. The Wire Mesh Shall Be Joined On All Faces And Shall Be Drawn Tightly Against The Stone By Means Of 3.8 mm Wire Ties Spaced 0.61 Meter Longitudinally And Transversally.
2. Wire Fabric Shall Be Galvanized and Be of the Configuration Shown on This Sheet. An Alternate Wire Fabric May Be Submitted For Review and Approval. Any Wire Fabric Used Shall Have a Class 3 Zinc Coating (Galvanizing), Have a Maximum Opening Dimension of 100 mm, and Shall Not Allow a 75 mm ø Sphere to Pass Through a Wire Fabric Opening.
3. Wire Enclosed Riprap Shall Be Anchored As Shown, By L 102 x 102 x 9.5 mm Steel Angles. Steel Angles Shall Extend 75 mm Above the Top Surface of the Wire Enclosed Riprap When Placed. Steel Angles Will Conform to AASHTO M270M, Grade 250.
4. Embankment Below Riprap Shall Conform to Section 204 of FP-03. Excavation For Riprap Foundations Shall Conform to Section 209 of FP-03. All Embankment For Wire Enclosed Riprap Above Natural Ground Is Included in the Quantity For Item 20401-0000, Roadway Excavation, and Shall Be Paid For Under That Item. All Excavation For Riprap Construction Shall Be Considered Incidental to Item 25112-2000, Wire Enclosed Riprap.
5. Rock Size Shall Conform to FP-03, Section 705, Table 705-1, Class 2.
6. Erosion Control Geotextile Shall Be Installed Under All Wire Enclosed Riprap As Shown and Shall Be Incidental to Item 25112-2000, Wire Enclosed Riprap. Erosion Control Geotextile Shall Conform to Section 714.01(a)(4) Type IV-B of FP-03. Geotextile To Be Embedded 400 mm Into Ground Along All Riprap Edges at an angle of 45° from the ground surface.
7. In Rock Areas, Drive Angle Iron Anchors To Refusal (Min. embedment 500 mm) Then Cut At 75 mm Above Riprap. Anchors Shall Be Saw Cut To Leave A Smooth Edge, Or Torch Cut and Ground Smooth to the Satisifaction of the COR/AOTR.
8. The Contractor Shall Be Required To Make Field Adjustments To Match Actual Field Conditions As Directed By The AOTR/COR. No Additional Payment Shall Be Made For Such Adjustments. The Quantities Shown Are Only An Estimate. Actual Quantities Shall Be Determined in The Field.

ITEM 25112-2000: WIRE ENCLOSED RIPRAP, CLASS 2

STATION	LOCATION	Wd1(m)	Wd2(m)	THICKNESS (mm)	ESTIMATED LENGTH (m)	VOLUME (m^3)
0+980.000 to 1+013.470 Lt.	Rt.	3.50	6.50	457	36.40	62
1+013.000 to 1+037.580 Rt.	Lt.	3.50	6.50	457	28.50	37
1+047.095 to 1+101.230 Lt.	Rt.	3.50	6.50	457	54.20	90
1+068.970 to 1+105.000 Rt.	Rt.	3.50	6.50	457	36.70	60
					TOTAL	249

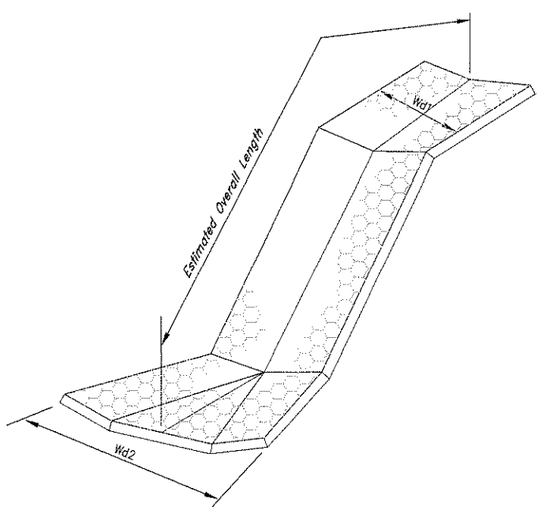

PERSPECTIVE VIEW
PLACED RIPRAP DOWNDRAIN AT WASH

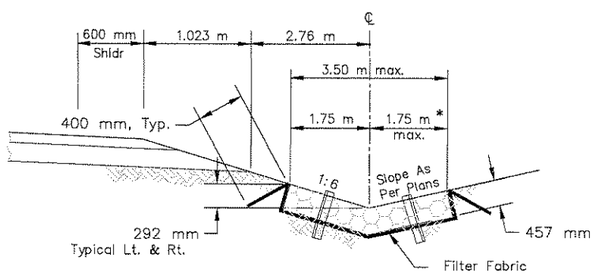

SECTION A-A
*Width=Depth Divided By Backslope (As Per Plans)

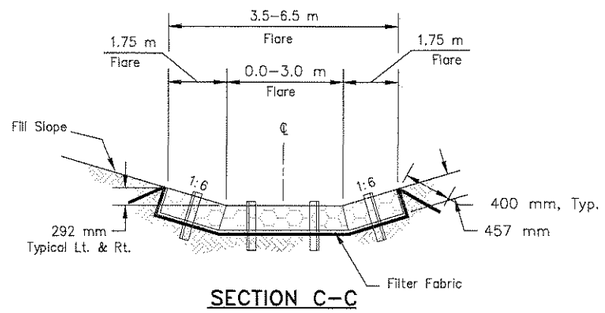

SECTION C-C

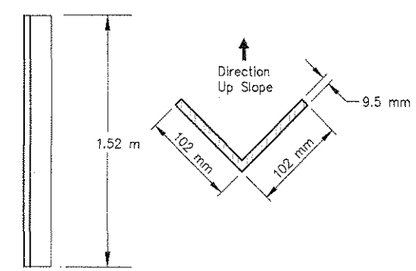

ANGLE IRON ANCHOR DETAIL
N.T.S.

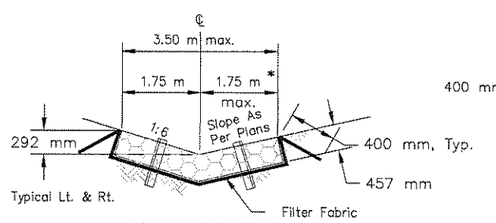

SECTION B-B
*Width=Depth Divided By Backslope(As Per Plans)

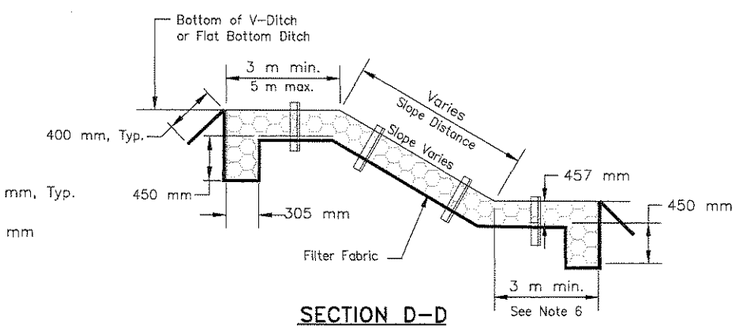

SECTION D-D

UNITED STATES
DEPARTMENT OF THE INTERIOR
BUREAU OF INDIAN AFFAIRS
NAVAJO REGION OFFICE * DIVISION OF TRANSPORTATION

EROSION CONTROL AND RIPRAP DOWNDRAIN DETAILS

Designed by: RDL	
Drawn by: cdh, RDL	Date: 08/07/09
Revised by:	Date:
File Name: N46_Erosion Control Plan	

REGION	STATE	RESERVATION	ROUTE	PROJECT NO.	SHEET	TOTAL SHEETS
NAVAJO	NEW MEXICO	NAVAJO	N46	N46(1)1,2&4	23	58

NOTES:

1. REFER TO BEAM SHEET AND BEARING PAD DETAILS SHEET FOR ADDITIONAL INFORMATION.
2. SEE ABUTMENT DIAPHRAGM DETAILS SHEET FOR ADDITIONAL INFORMATION ON ABUTMENT DIAPHRAGMS AND APPROACH SLAB SEAT.
3. PBJF – PREFORMED BITUMINOUS JOINT FILLER
4. SEE SHEET 33 FOR TOP OF SLAB ELEVATIONS

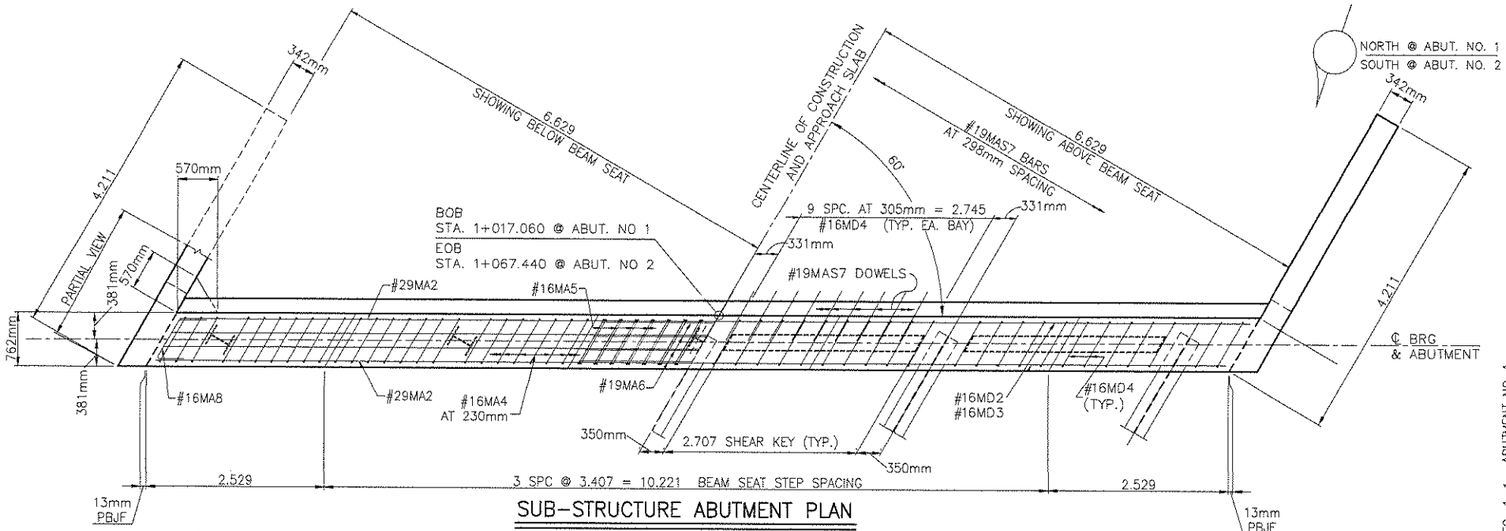

SUB-STRUCTURE ABUTMENT PLAN

SCALE NTS

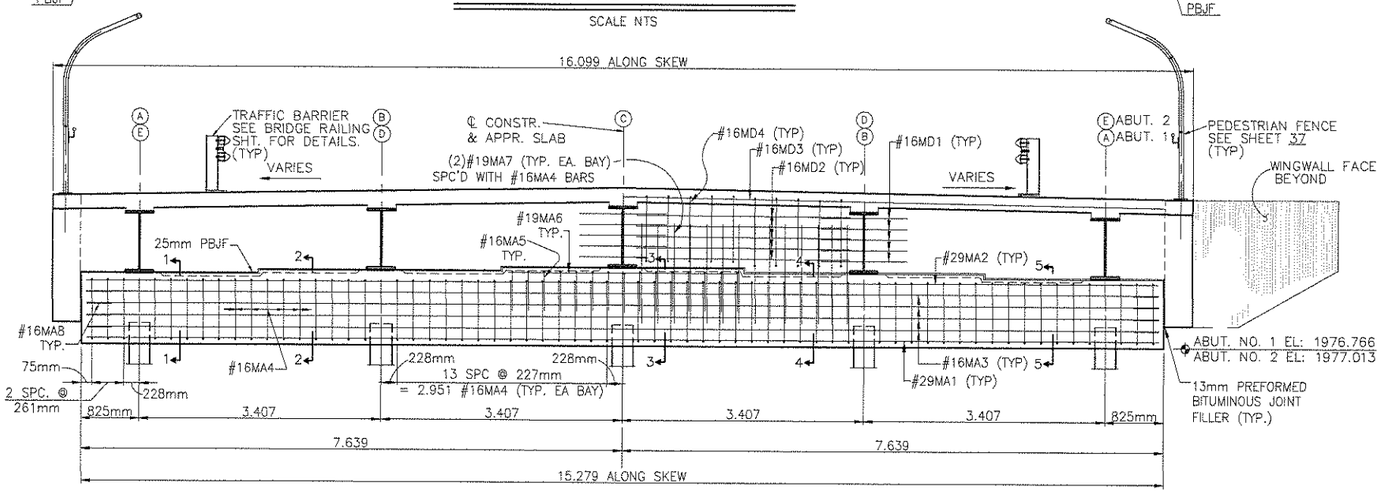

ELEVATION

SCALE: NTS

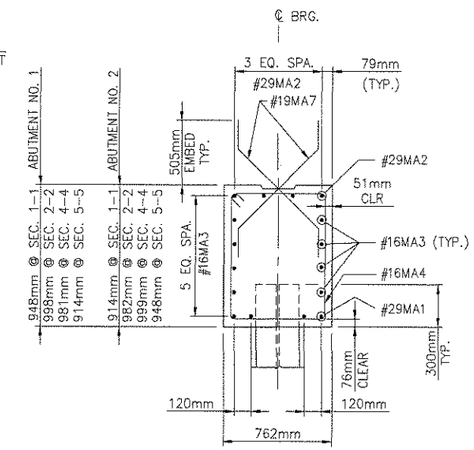

SECTIONS 1–1, 2–2, 4–4 & 5–5

SCALE: NTS

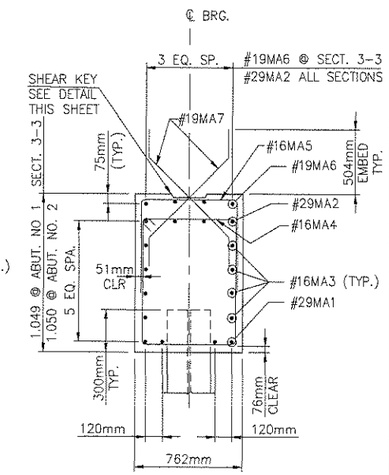

SECTION 3–3

SCALE: NTS

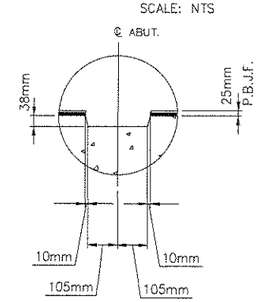

SHEAR KEY DETAIL

SCALE: NTS

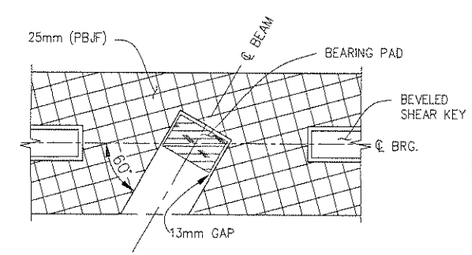

PLAN AT BEARING (INTERIOR)

SCALE: NTS

BRIDGE SEAT ELEVATIONS

	BEAM A	BEAM B	BEAM C	BEAM D	BEAM E
ABUT. 1	1977.680	1977.747	1977.815	1977.764	1977.714
ABUT. 2	1977.927	1977.995	1978.063	1978.012	1977.961

NOTE: FOR TOP OF DECK ELEVATIONS SEE SHEET 33.

UNITED STATES
DEPARTMENT OF THE INTERIOR
BUREAU OF INDIAN AFFAIRS
NAVAJO REGION OFFICE * DIVISION OF TRANSPORTATION

ABUTMENT DETAILS

Designed by:

Drawn by: RLC, rsh, cdh Date: 08/07/09

Revised by: Date:

File Name: N46_Abutment1.dwg

REGION	STATE	RESERVATION	ROUTE	PROJECT NO.	SHEET	TOTAL SHEETS
NAVAJO	NEW MEXICO	NAVAJO	N46	N46(1)1,2&4	24	58

1. REFER TO BEAM SHEET AND BEARING PAD DETAILS SHEET FOR ADDITIONAL INFORMATION.
2. SEE DIAPHRAGM DETAILS SHEET FOR ADDITIONAL INFORMATION ON DIAPHRAGMS.
3. PBJF – PREFORMED BITUMINOUS JOINT FILLER

BEAM SEAT ELEVATION @ PIER BEARINGS

GIRDER	SPAN 1	SPAN 2
E	1977.838	1977.838
D	1977.888	1977.888
C	1977.939	1977.939
B	1977.871	1977.871
A	1977.803	1977.803

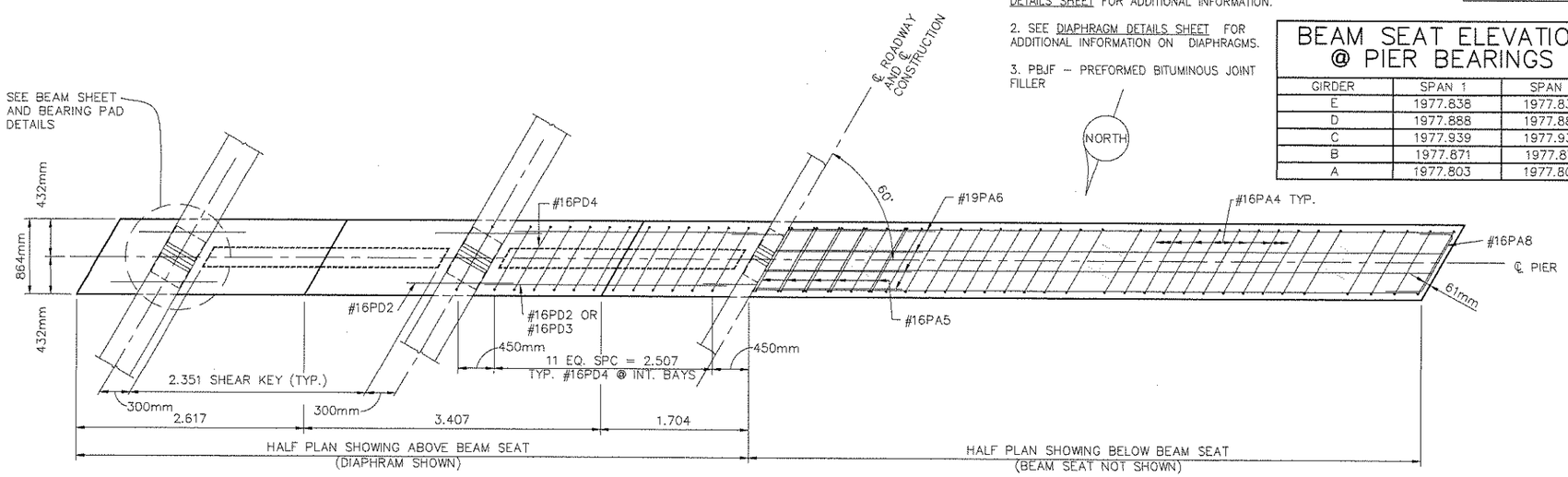

PLAN

SCALE: NTS
LOOKING BACK STATION

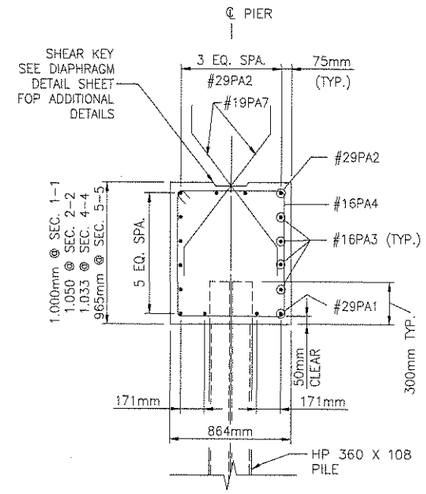

SECTION 1–1, 2–2, 4–4 & 5–5

SCALE: NTS

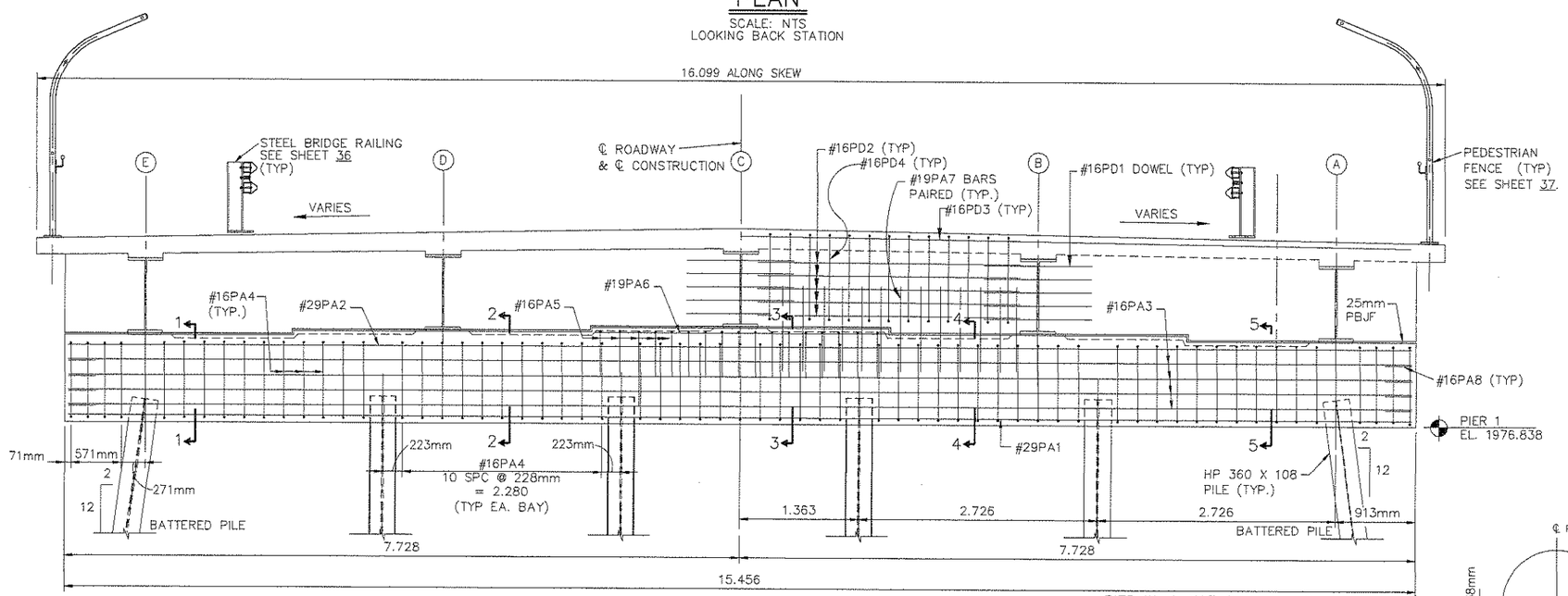

ELEVATION

SCALE: NTS
LOOKING BACK STATION

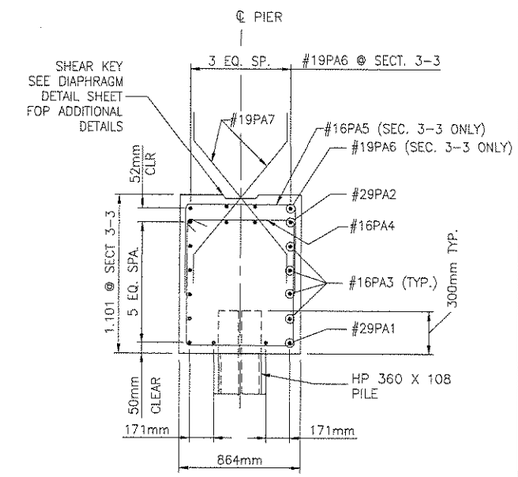

SECTION 3–3

SCALE: NTS

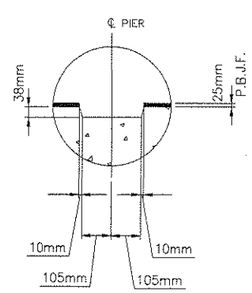

SHEAR KEY DETAIL

SCALE: NTS

UNITED STATES
DEPARTMENT OF THE INTERIOR
BUREAU OF INDIAN AFFAIRS
NAVAJO REGION OFFICE * DIVISION OF TRANSPORTATION

PIER DETAILS

Designed by: MJJ	
Drawn by: RLC, cdh Date: 08/07/09	
Revised by: Date:	
File Name: N46_Pier_Details.dwg	

REGION	STATE	RESERVATION	ROUTE	PROJECT NO.	SHEET	TOTAL SHEETS
NAVAJO	NEW MEXICO	NAVAJO	N46	N46(1)1,2&4	25	58

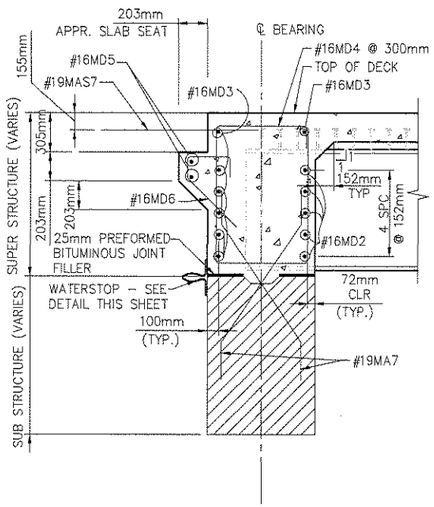

FIXED ABUTMENT DIAPHRAGM SECTION BETWEEN BEAMS

SCALE: NTS

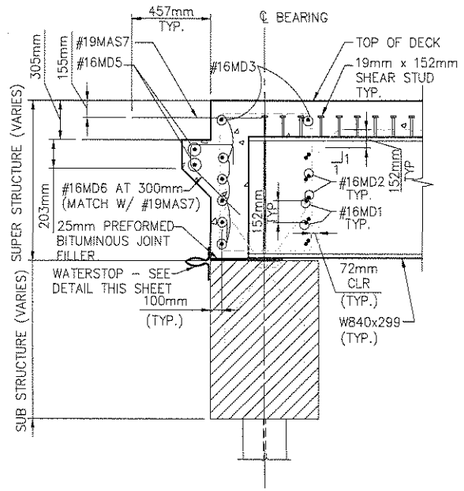

FIXED ABUTMENT DIAPHRAGM SECTION @ BEAM

SCALE: NTS

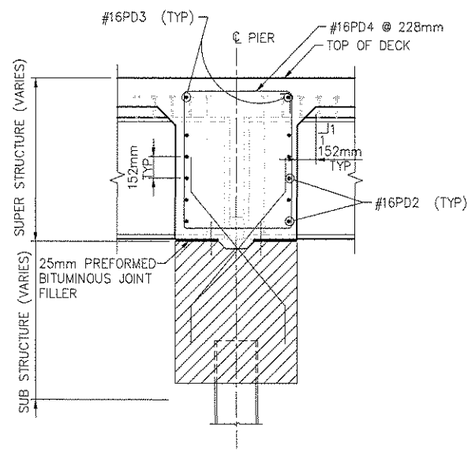

FIXED PIER DIAPHRAGM SECTION BETWEEN BEAMS

SCALE: NTS

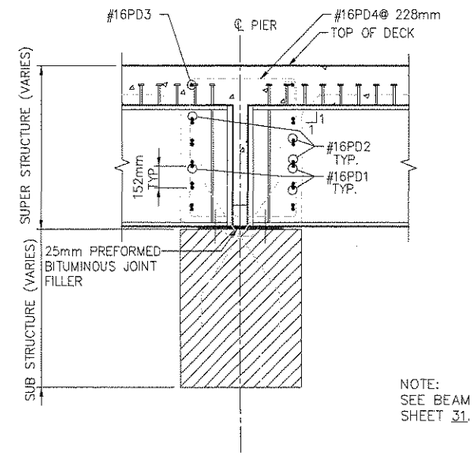

NOTE:
SEE BEAM DETAILS ON SHEET 31.

FIXED PIER DIAPHRAGM SECTION @ BEAMS

SCALE: NTS

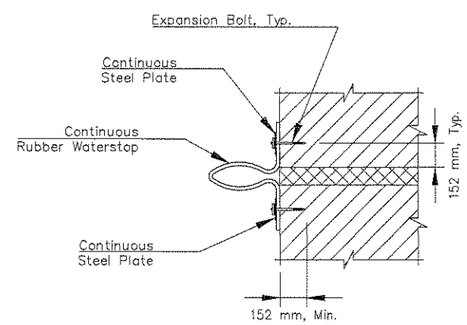

CONTINUOUS RUBBER WATERSTOP SHALL BE 457mm x 10mm THICK AND LONG ENOUGH TO PROVIDE A CONTINUOUS SEAL ACROSS THE ABUTMENT, AND SHALL CONFORM TO THE SUPPLEMENTAL SPECIFICATION 712.06.

THE WATERSTOP SHALL BE BOLTED WITH CONTINUOUS STEEL PLATES 102mm WIDE x 10mm THICK CONFORMING TO AASHTO M270M, GRADE 250 AT TOP AND BOTTOM (2 ea).

STEEL PLATES COVERING RUBBER WATERSTOP SHALL BE BOLTED TO THE CONCRETE WITH 13mm DIA., ASTM A307, GRADE A EXPANSION BOLTS AT 395mm c/c. EMBED THE BOLTS INTO PREDRILLED HOLES A MINIMUM DEPTH OF 152mm. PROVIDE STANDARD GALVANIZED WASHERS FOR ALL BOLTS.

GALVANIZE THE STEEL PLATES AND BOLTS ACCORDING TO AASHTO M298, CLASS 50 OR AASHTO M232.

FURNISHING AND INSTALLATION OF THE WORK SHALL BE INCLUDED IN THE BID PRICE FOR ITEM 55201-0200, STRUCTURAL CONCRETE.

WATERSTOP DETAIL

SCALE: NTS

UNITED STATES
DEPARTMENT OF THE INTERIOR
BUREAU OF INDIAN AFFAIRS
NAVAJO REGION OFFICE * DIVISION OF TRANSPORTATION

ABUTMENT AND PIER DIAPHRAGM DETAILS

Designed by:	
Drawn by: RLC, cdh	Date: 08/07/09
Revised by:	Date:
File Name: N46_DiaDetail.dwg	

REGION	STATE	RESERVATION	ROUTE	PROJECT NO.	SHEET	TOTAL SHEETS
NAVAJO	NEW MEXICO	NAVAJO	N46	N46(1)1,2&4	26	58

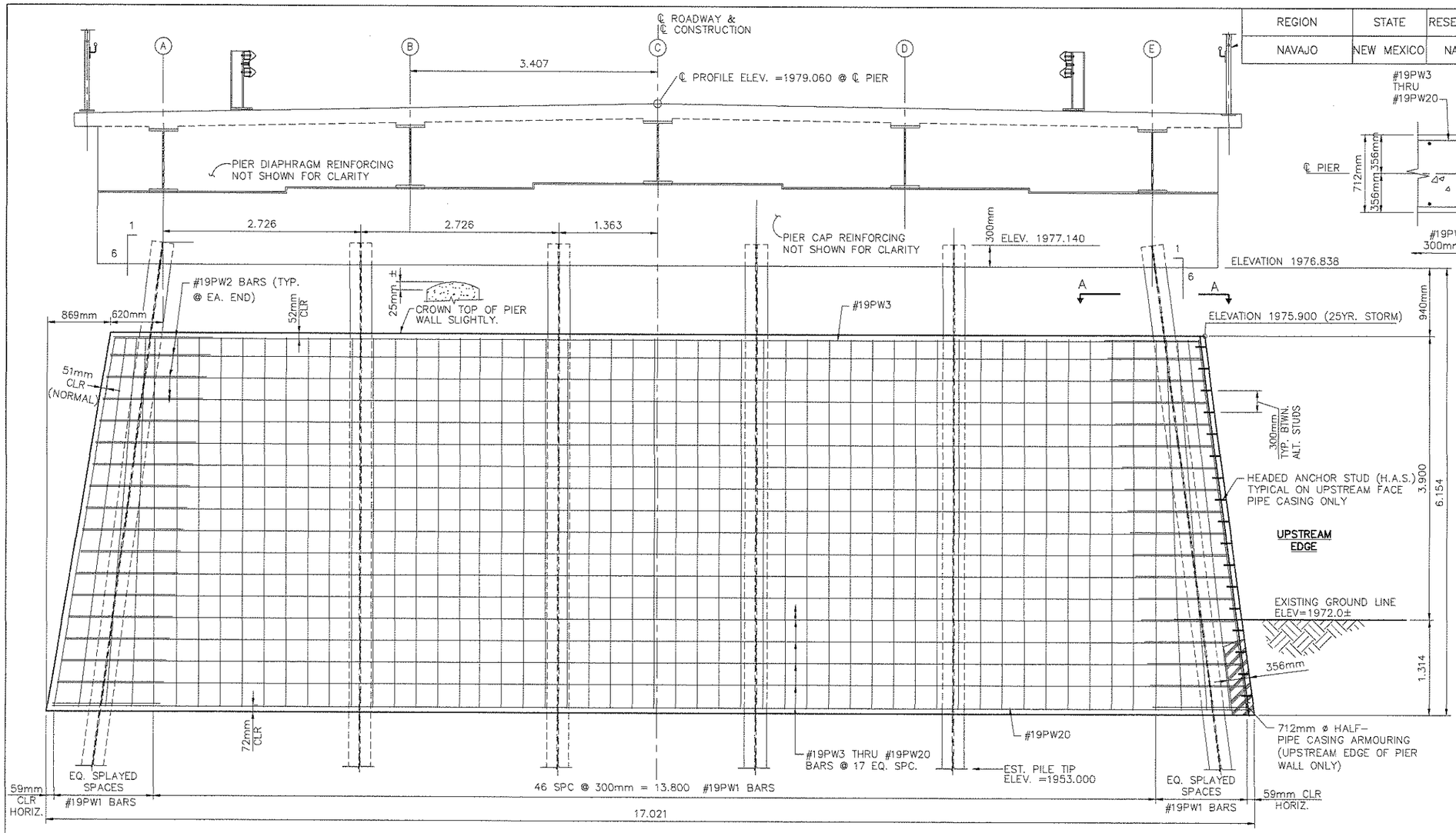

ELEVATION

NORMAL ALONG PIER SKEW LINE
SCALE: NTS

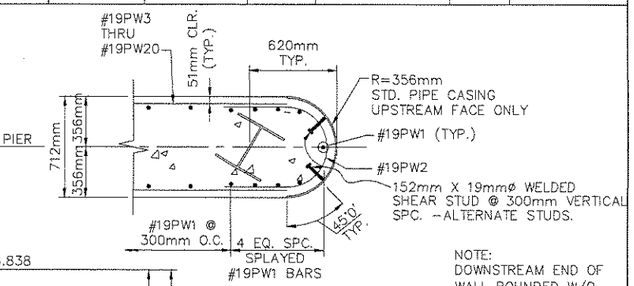

NOTE:
DOWNSTREAM END OF WALL ROUNDED W/O STEEL CASING.

SECTION A–A

SCALE: NTS

NOTE:
PILES @ PIERS SHALL BE PAINTED FROM BOTTOM OF CONCRETE PIERCAP TO TOP OF PIER WALL WITH A PAINTING SYSTEM CONFORMING TO TABLE 563-1, PAINT SYSTEM 4 OR 5. ALL WORK SHALL BE IN ACCORDANCE WITH SECTION 563 OF THE FP-03 AND ANY APPLICABLE STATE OR LOCAL REGULATIONS. THE FINISHED COLOR OF PILES SHALL BE ZINC SILVER IN APPEARANCE.

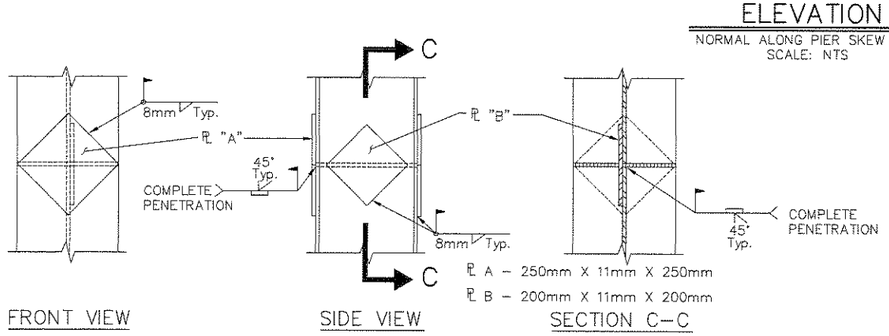

FIELD SPLICE FOR STEEL BEARING PILES

SCALE: NTS

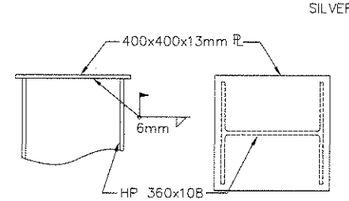

PILE COVER PLATE DETAIL

SCALE: NTS

UNITED STATES
DEPARTMENT OF THE INTERIOR
BUREAU OF INDIAN AFFAIRS
NAVAJO REGION OFFICE * DIVISION OF TRANSPORTATION

PIER WALL DETAILS

Designed by:		
Drawn by: RLC, cdh	Date: 08/07/09	
Revised by:	Date:	
File Name: N46_Pier_Details.dwg		

REGION	STATE	RESERVATION	ROUTE	PROJECT NO.	SHEET	TOTAL SHEETS
NAVAJO	NEW MEXICO	NAVAJO	N46	N46(1)1,2&4	27	58

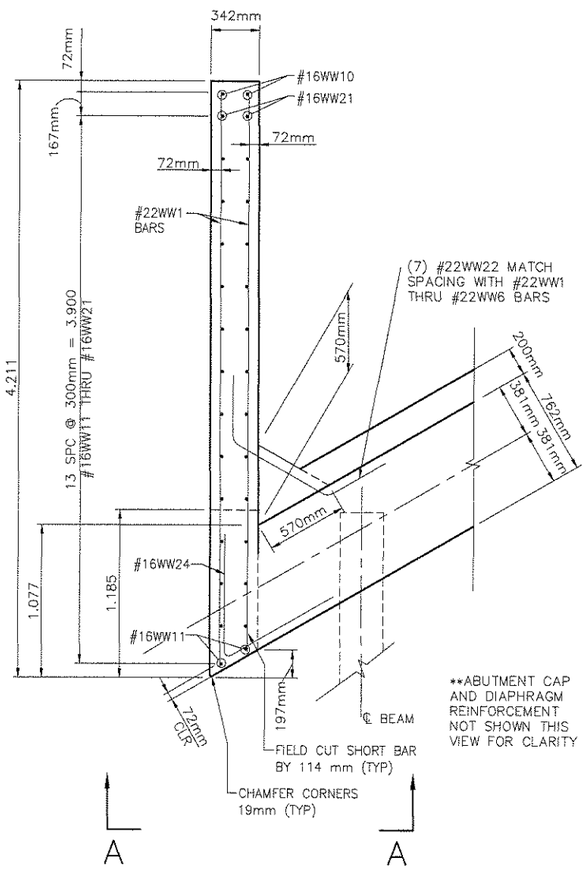

SUB-STRUCTURE WINGWALL PLAN

SCALE: NTS

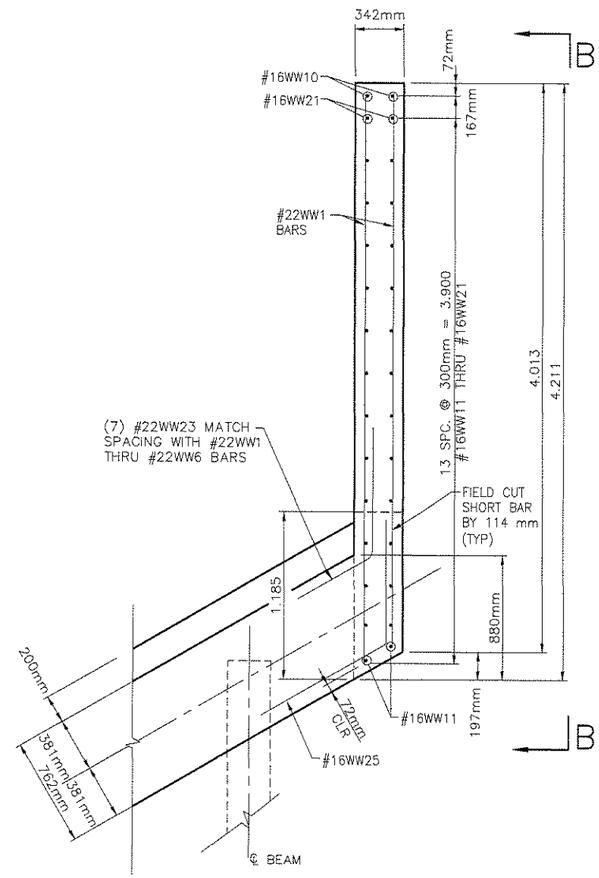

SUB-STRUCTURE WINGWALL PLAN

SCALE: NTS

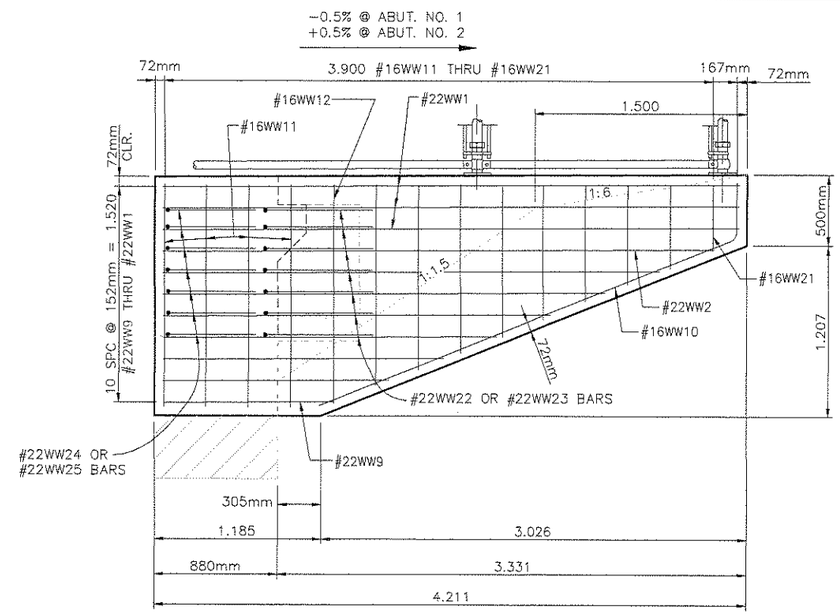

SUB-STRUCTURE WINGWALL ELEVATION B-B

SCALE: NTS

NOTE: FOR BRIDGE RAILING DETAILS SEE SHEET 36.
FOR PEDESTRIAN FENCE DETAILS SEE SHEET 37.

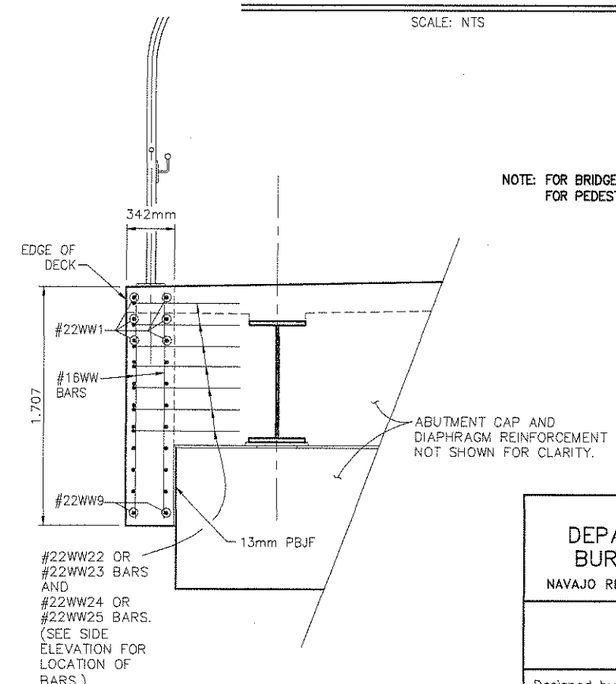

SUB-STRUCTURE WINGWALL SECTION A-A

SCALE: NTS

UNITED STATES
DEPARTMENT OF THE INTERIOR
BUREAU OF INDIAN AFFAIRS
NAVAJO REGION OFFICE * DIVISION OF TRANSPORTATION

WINGWALL DETAILS

Designed by:		
Drawn by: RLC, cdh	Date: 08/07/09	
Revised by:	Date:	
File Name: N46_wingwalls.dwg		

REGION	STATE	RESERVATION	ROUTE	PROJECT NO.	SHEET	TOTAL SHEETS
NAVAJO	NEW MEXICO	NAVAJO	N46	N46(1)1,2&4	28	58

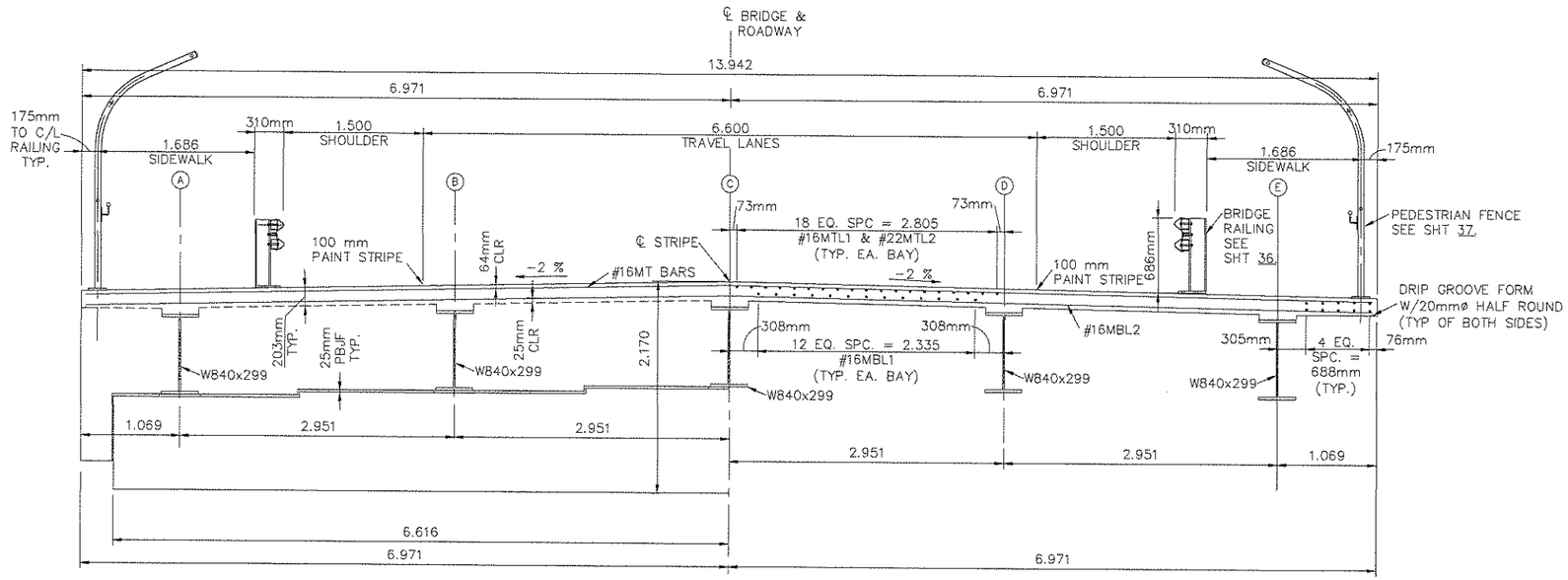

TYPICAL SECTION AT ABUTMENT

TYPICAL SECTION NEAR MIDSPAN

TYPICAL SECTION

NORMAL TO ROADWAY ℄
SCALE: NTS

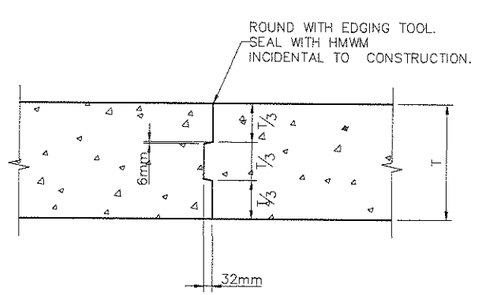

PERMISSIBLE TRANSVERSE CONSTRUCTION JOINT

SCALE: NTS T = DECK THICKNESS

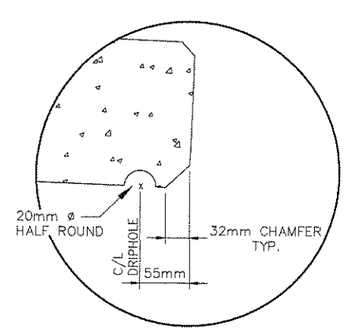

DRIP GROOVE DETAIL

SCALE: NTS

UNITED STATES
DEPARTMENT OF THE INTERIOR
BUREAU OF INDIAN AFFAIRS
NAVAJO REGION OFFICE * DIVISION OF TRANSPORTATION

TYPICAL BRIDGE SECTION

Designed by:	
Drawn by: RLC, cdh	Date: 08/07/09
Revised by:	Date:
File Name: N46_Typ_Section.dwg	

REGION	STATE	RESERVATION	ROUTE	PROJECT NO.	SHEET	TOTAL SHEETS
NAVAJO	NEW MEXICO	NAVAJO	N46	N46(1)1,2&4	29	58

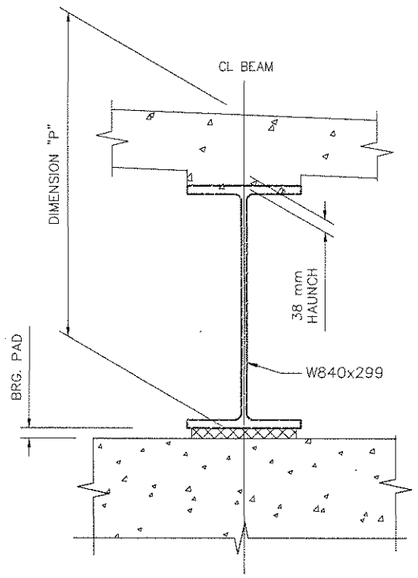

TYPICAL DIAPHRAGM SECTION

SCALE: NTS

ELASTOMERIC BEARING PAD SCHEDULE

60 DUROMETER

LOCATION	DIMENSIONS			NUMBER OF SHIMS	INNER LAMINATION		OUTER LAMINATION		DESIGN LOAD	NUMBER REQUIRED
	W	L	T		NUMBER	TKN	NUMBER	TKN		
ABUT NO. 1 & 2	381mm	254mm	25mm	2	1	13mm	2	3mm	DL = 244.7 kN LL = 0 kN	10
PIER NO. 1	381mm	254mm	25mm	2	1	13mm	2	3mm	DL = 255.5 kN LL = 0KN	10

TABLE OF DIMENSION "P" @ ALL BEAM BEARINGS

	BEAM BEARING
SLAB	203mm
HAUNCH	38mm
BEAM	855mm
BEARING PAD	25mm
DIMENSION "P"	1.121

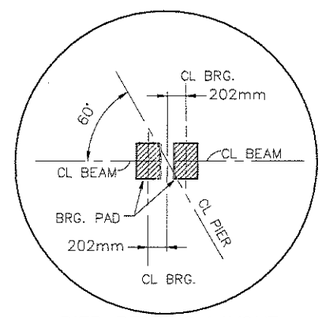

PIER BEARING LAYOUT

SCALE: NTS

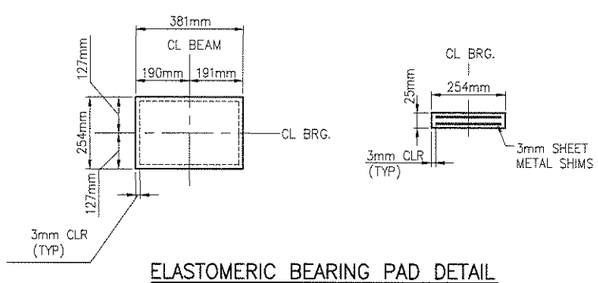

ELASTOMERIC BEARING PAD DETAIL

SCALE: NTS

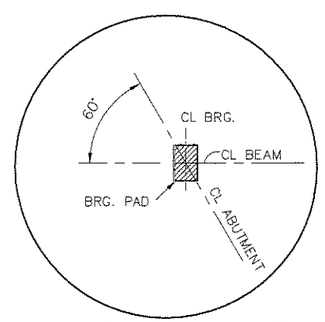

ABUTMENT BEARING LAYOUT

SCALE: NTS

UNITED STATES
DEPARTMENT OF THE INTERIOR
BUREAU OF INDIAN AFFAIRS
NAVAJO REGION OFFICE * DIVISION OF TRANSPORTATION

BEAM SEAT AND BEARING PAD DETAILS

Designed by:	
Drawn by: RLC, cdh	Date: 08/07/09
Revised by:	Date:
File Name: N46_bearing_details.dwg	

REGION	STATE	RESERVATION	ROUTE	PROJECT NO.	SHEET	TOTAL SHEETS
NAVAJO	NEW MEXICO	NAVAJO	N46	N46(1)1,2&4	30	58

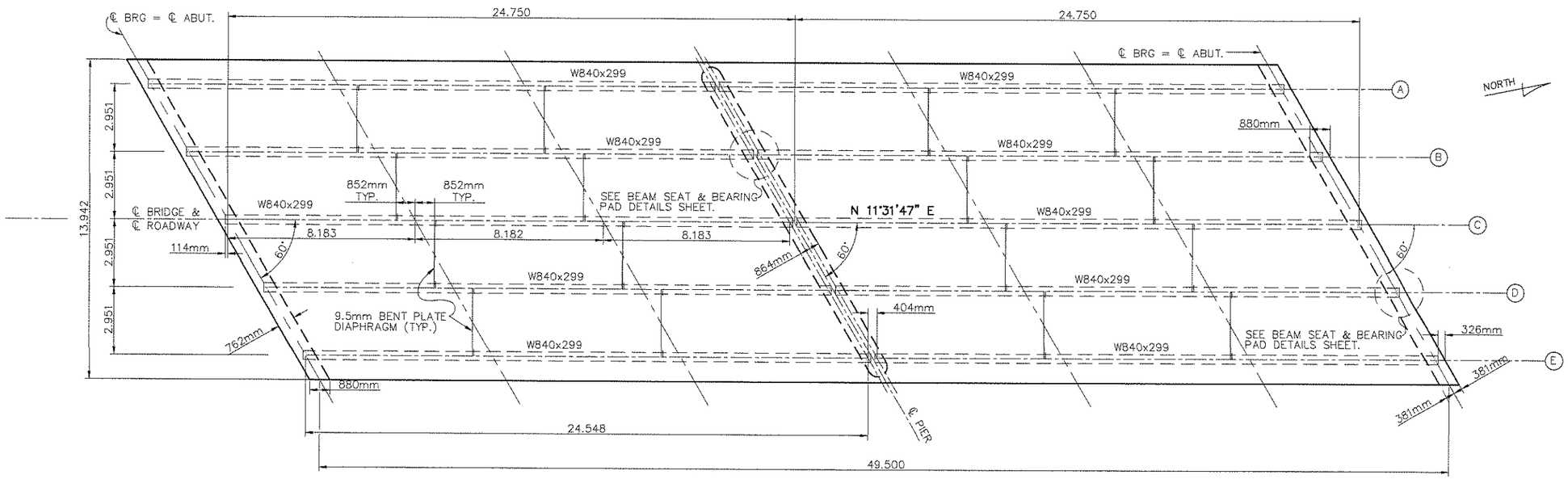

NOTE: DIAPHRAGM SPACINGS IN SPAN 2 ARE THE SAME AS IN SPAN 1.

TYPICAL FRAMING LAYOUT

SCALE: NTS

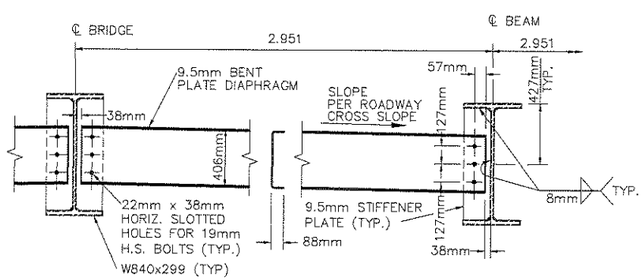

TYPICAL DIAPHRAGM SECTION

SCALE: NTS

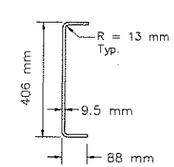

BENT PLATE DIAPHRAGM DETAIL

SCALE: NTS

UNITED STATES
DEPARTMENT OF THE INTERIOR
BUREAU OF INDIAN AFFAIRS
NAVAJO REGION OFFICE * DIVISION OF TRANSPORTATION

FRAMING PLAN

Designed by:		
Drawn by:	RLC, cdh	Date: 08/07/09
Revised by:		Date:
File Name:	N46_FramingPlan.dwg	

REGION	STATE	RESERVATION	ROUTE	PROJECT NO.	SHEET	TOTAL SHEETS
NAVAJO	NEW MEXICO	NAVAJO	N46	N46(1)1,2&4	31	58

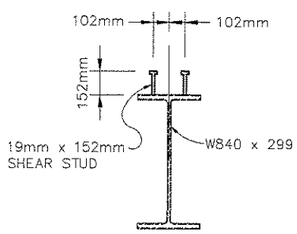

SHEAR STUD DETAIL

SCALE= N.T.S.

PL = PLATE

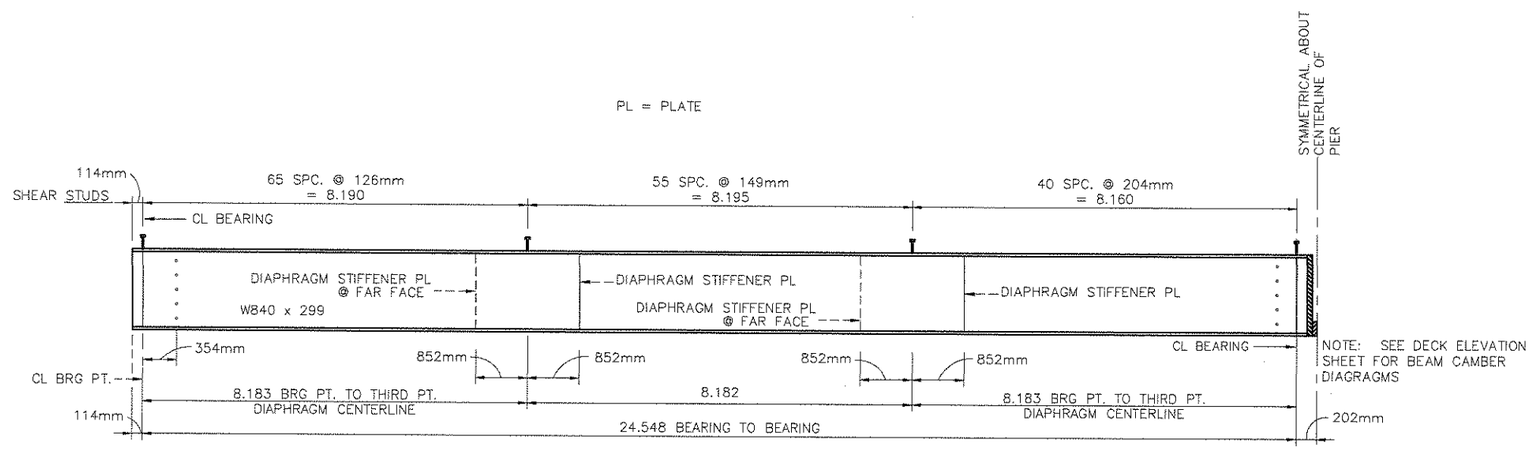

NOTE: SEE DECK ELEVATION SHEET FOR BEAM CAMBER DIAGRAMS

BEAM PARTIAL ELEVATION

SCALE: N.T.S.

SEE FRAMING PLAN FOR BEAM AND INTERMEDIATE DIAPHRAGM AND PLATE LAYOUT.

NOTES

1. ALL WELDS SHALL UTILIZE WELDING PROCESSES AND ELECTRODES AS REQUIRED THAT WILL PROVIDE CORROSION RESISTANCE AND WEATHERING CHARACTERISTICS FOR WELDS COMPARABLE TO THE BASE METAL, IN ACCORDANCE WITH AASHTO AWS D1.5, 2002.
2. ALL FASTENERS, SUCH AS BOLTS, NUTS AND WASHERS THAT BOLT DIRECTLY TO THE WEATHERING GRADE STEEL SHALL BE HIGH STRENGTH FASTENERS WITH ATMOSPHERIC CORROSION RESISTANCE AND WEATHERING CHARACTERISTICS COMPARABLE WITH THE A709M WEATHERING STEEL
3. SHEAR CONNECTOR STUDS SHALL BE ATTACHED TO THE BEAMS IN THE FABRICATION SHOP.
4. PAYMENT FOR SHEAR STUDS, BEARING PADS AND MISC. STEEL PLATES (END PLATES, BLOCKS AND STIFFENERS) IS TO BE CONSIDERED INCIDENTAL TO 55502-0000, STRUCTURAL STEEL.
5. SEE BRIDGE NOTES, ON SHEET 14, FOR ADDITIONAL STEEL NOTES.

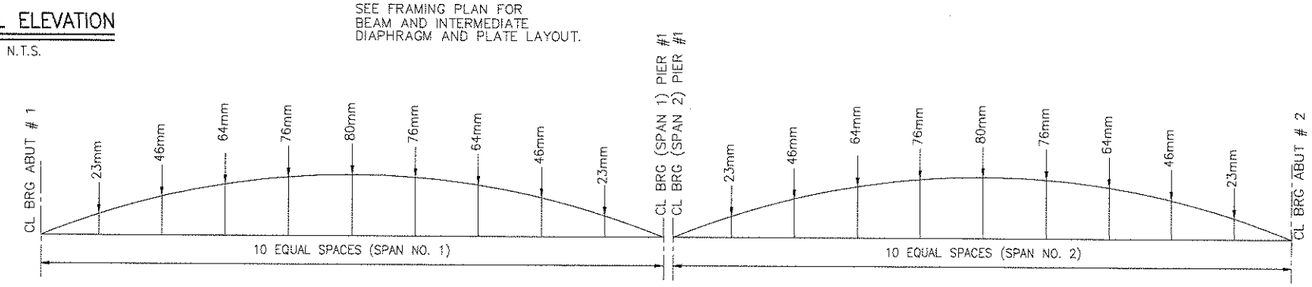

DEAD LOAD DEFLECTION AND BEAM CAMBER DIAGRAM

SCALE N.T.S.

NOTE:

TO COMPENSATE FOR DEAD LOAD DEFLECTIONS DUE TO WEIGHT OF SLAB AND SUPERIMPOSED DEAD LOADS, SET SCREEDS ABOVE FINISH GRADES BY DIMENSIONS (mm) SHOWN ABOVE.

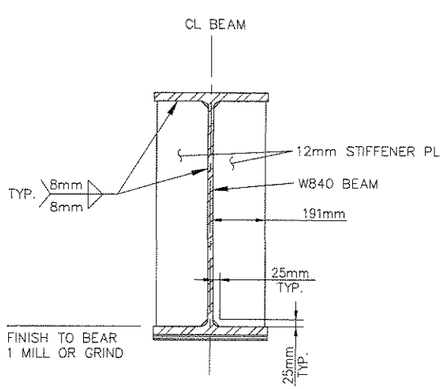

SECTION AT BEARING STIFFENER

SCALE: NTS

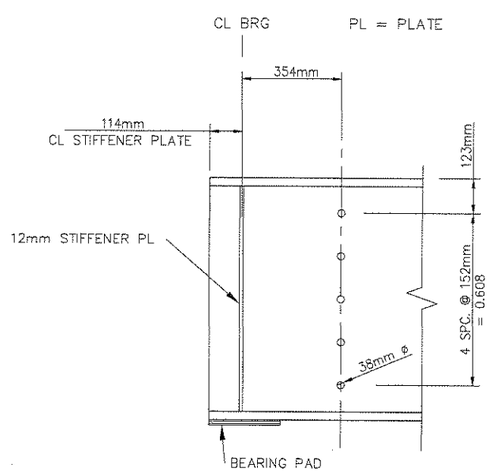

DETAIL AT BEAM END (ABUTMENT)

SCALE: NTS

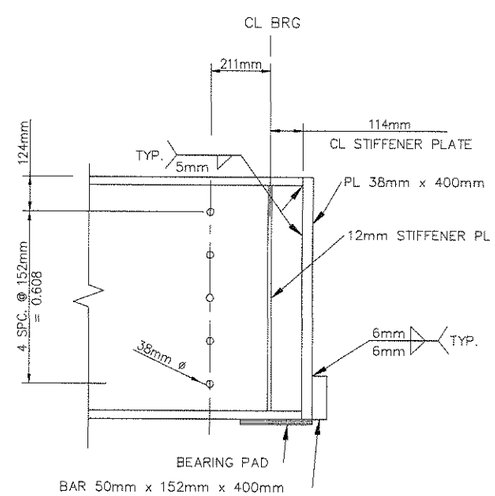

DETAIL AT BEAM END (PIER)

SCALE: NTS

UNITED STATES
DEPARTMENT OF THE INTERIOR
BUREAU OF INDIAN AFFAIRS
NAVAJO REGIONAL OFFICE * DIVISION OF TRANSPORTATION

BEAM DETAILS

Designed by:		
Drawn by: RLC, cdh	Date: 08/07/09	
Revised by:	Date:	
File Name: N46_BeamDetails.dwg		

REGION	STATE	RESERVATION	ROUTE	PROJECT NO.	SHEET	TOTAL SHEETS
NAVAJO	NEW MEXICO	NAVAJO	N46	N46(1)1,2&4	32	58

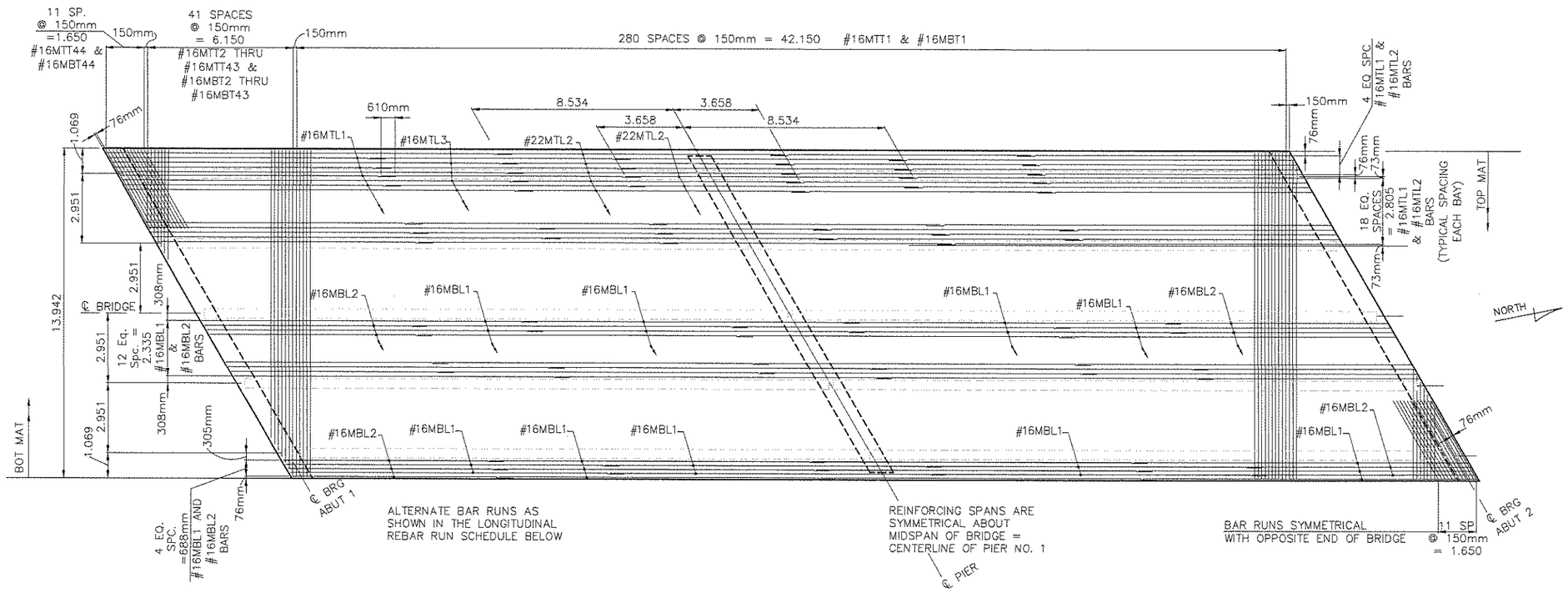

SEE SHEET 28 FOR CROSS SECTION OF DECK AND REINFORCING DETAILS.

DECK REINFORCEMENT

SCALE: NTS

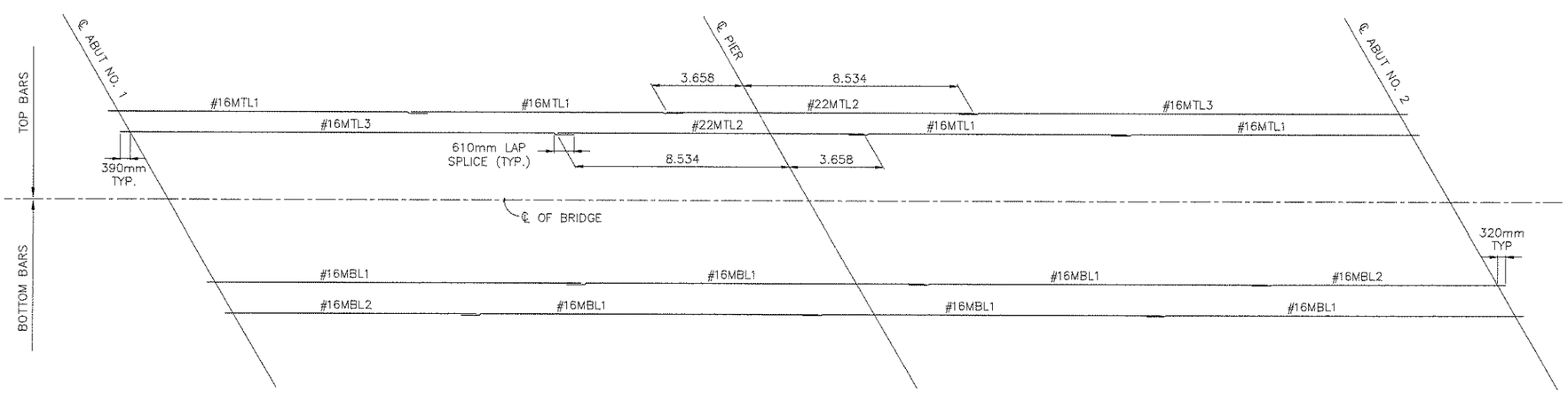

LONGITUDINAL REBAR RUNS

SCALE= N.T.S.

UNITED STATES
DEPARTMENT OF THE INTERIOR
BUREAU OF INDIAN AFFAIRS
NAVAJO REGIONAL OFFICE * DIVISION OF TRANSPORTATION

DECK REINFORCEMENT

Designed by:

Drawn by: RLC, rsh, cdh Date: 08/07/09

Revised by: Date:

File Name: N46_Deck_Reinf.dwg

REGION	STATE	RESERVATION	ROUTE	PROJECT NO.	SHEET	TOTAL SHEETS
NAVAJO	NEW MEXICO	NAVAJO	N46	N46(1)1,2&4	33	58

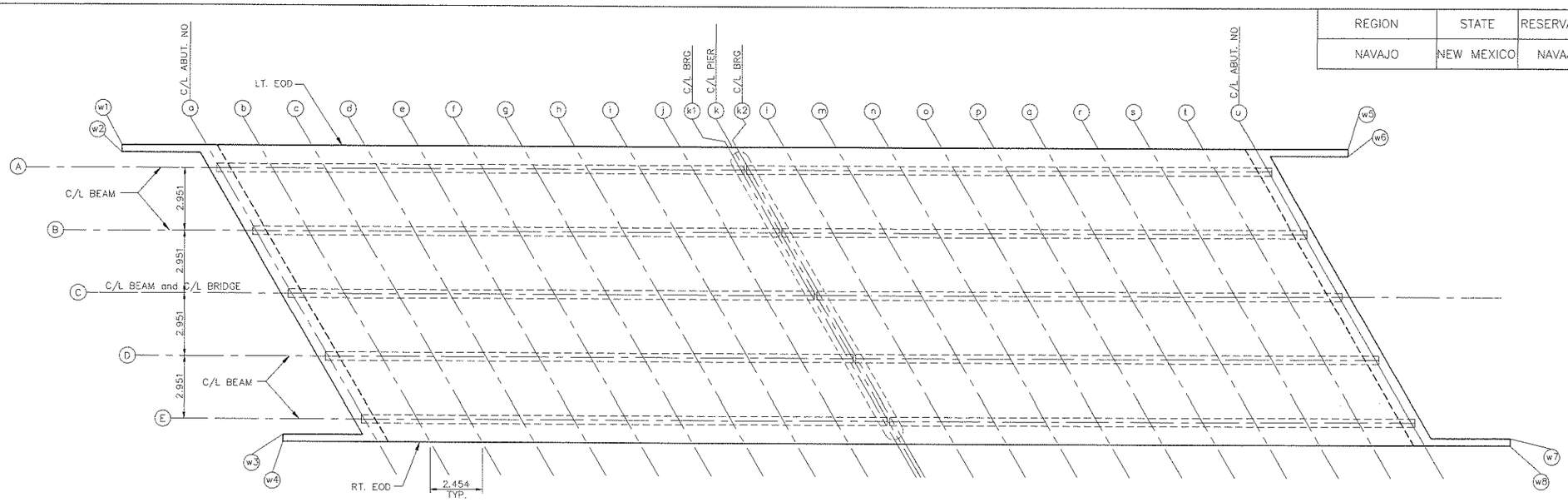

REFERENCE DIAGRAGM FOR ELEVATIONS AT 10TH POINTS

SCALE: N.T.S.

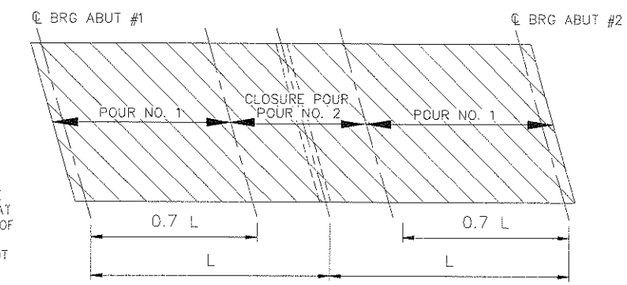

NOTE:
CONCRETE SHALL BE PLACED THE FULL WIDTH OF THE DECK SLAB AT A FORWARD RATE OF PROGRESS OF NOT LESS THAN 10 METERS PER HOUR. SET RETARDANT SHALL NOT BE USED IF THE ATMOSPHERIC TEMPERATURE AT THE TIME OF PLACEMENT IS LESS THAN 16° C (61° F).

CONCRETE DECK PLACEMENT DETAIL

TOP OF SLAB ELEVATIONS @ 10th POINTS

	a	b	c	d	e	f	g	h	i	j	k1	k	k2	l	m	n	o	p	q	r	s	t	u
LT EOD	1978.776	1978.789	1978.801	1978.813	1978.826	1978.838	1978.850	1978.862	1978.875	1978.887	1978.899	1978.900	1978.901	1978.913	1978.925	1978.937	1978.950	1978.962	1978.974	1978.987	1978.999	1979.012	1979.024
A	1978.801	1978.813	1978.825	1978.838	1978.850	1978.862	1978.875	1978.887	1978.899	1978.911	1978.924	1978.925	1978.926	1978.937	1978.949	1978.962	1978.974	1978.987	1978.999	1979.011	1979.024	1979.036	1979.048
B	1978.868	1978.881	1978.893	1978.905	1978.918	1978.930	1978.942	1978.954	1978.967	1978.979	1978.991	1978.992	1978.993	1979.005	1979.017	1979.029	1979.042	1979.054	1979.066	1979.079	1979.091	1979.104	1979.116
C	1978.936	1978.948	1978.961	1978.973	1978.985	1978.997	1979.010	1979.022	1979.034	1979.046	1979.059	1979.060	1979.061	1979.072	1979.085	1979.097	1979.109	1979.122	1979.134	1979.146	1979.159	1979.171	1979.184
D	1978.885	1978.898	1978.910	1978.922	1978.935	1978.947	1978.959	1978.971	1978.984	1978.996	1979.008	1979.009	1979.010	1979.022	1979.034	1979.046	1979.059	1979.071	1979.083	1979.096	1979.108	1979.121	1979.133
E	1978.835	1978.847	1978.860	1978.872	1978.884	1978.896	1978.909	1978.921	1978.933	1978.945	1979.958	1979.959	1979.960	1978.971	1978.983	1978.996	1979.008	1979.021	1979.033	1979.045	1979.058	1979.070	1979.082
RT EOD	1978.817	1978.829	1978.841	1978.854	1978.866	1978.878	1978.890	1978.903	1978.915	1978.927	1978.939	1978.940	1978.941	1978.953	1978.965	1978.978	1978.990	1979.002	1979.015	1979.027	1979.039	1979.052	1979.064

EOD = EDGE OF DECK

DECK ELEVATIONS AT 10TH POINTS

SCALE= N.T.S.

TOP OF WING WALL ELEVATION

	STA	OFFSET	ELEVATION
w1	1+008.770	7.312 LT	1978.750
w2	1+008.770	6.970 LT	1978.753
w3	1+016.810	6.970 LT	1978.793
w4	1+016.810	7.312 RT	1978.790
w5	1+067.690	7.312 LT	1979.045
w6	1+067.690	6.970 LT	1979.048
w7	1+075.740	6.970 RT	1979.088
w8	1+075.740	7.312 RT	1979.085

UNITED STATES
DEPARTMENT OF THE INTERIOR
BUREAU OF INDIAN AFFAIRS
NAVAJO REGION OFFICE * DIVISION OF TRANSPORTATION

DECK and WINGWALL ELEVATIONS

Designed by:
Drawn by: RLC, cdh Date: 80/07/09
Revised by: Date:
File Name: N46_Deck_Elevations.dwg

REGION	STATE	RESERVATION	ROUTE	PROJECT NO.	SHEET	TOTAL SHEETS
NAVAJO	NEW MEXICO	NAVAJO	N46	N46(1)1,2&4	34	58

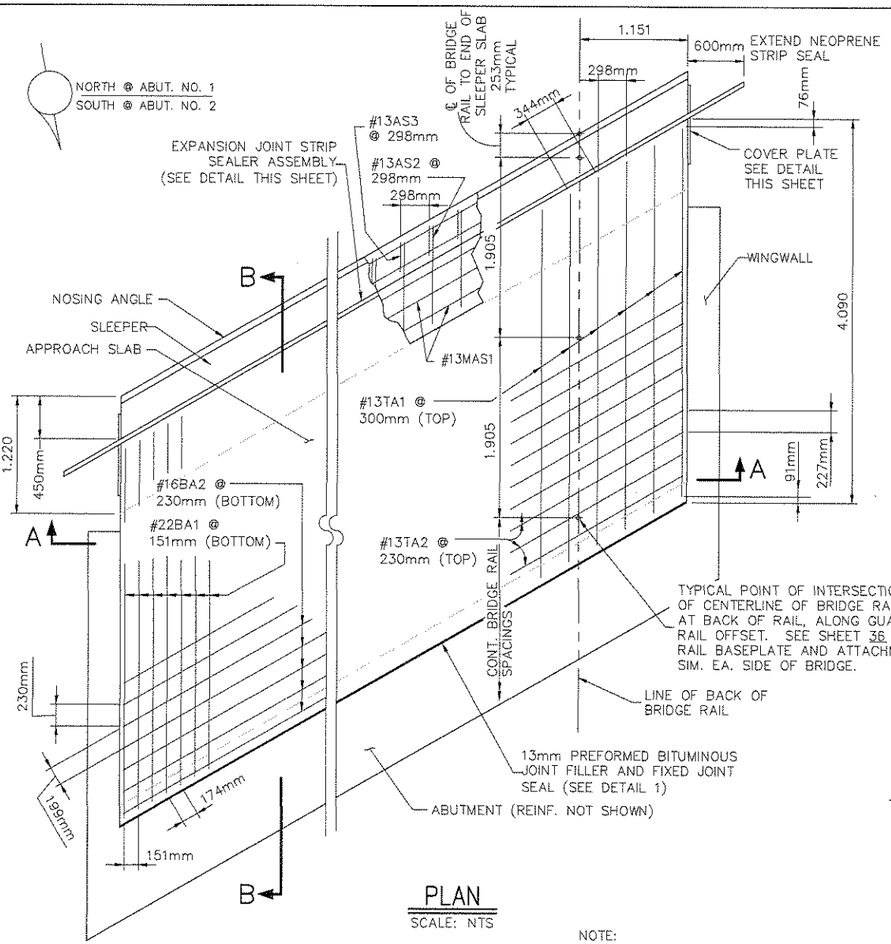

PLAN

SCALE: NTS

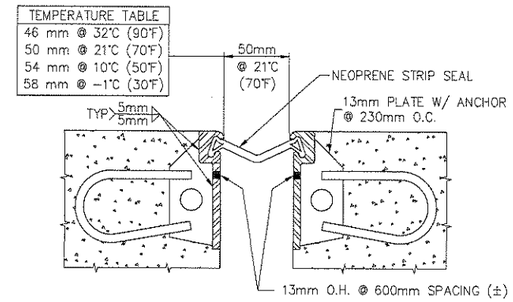

EXPANSION JOINT TYPICAL SECTION

SCALE: NTS

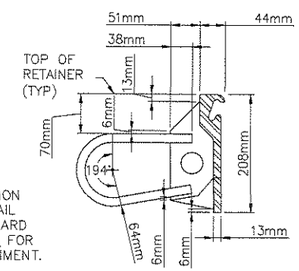

WATSON–BOWMAN & ACME

SCALE: NTS

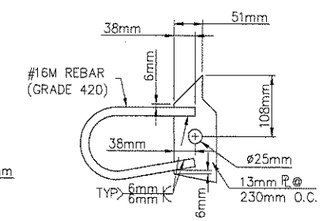

ANCHOR DETAIL

SCALE: NTS

TYPICAL BRIDGE JOINT NOTES:

THE COST OF FURNISHING AND INSTALLING THESE JOINTS AND ALL MATERIALS SHALL BE CONSIDERED INCIDENTAL TO THE COST OF STRUCTURAL CONCRETE CLASS A(AE), ITEM NO. 55201–0200 AND NO DIRECT PAYMENT WILL BE MADE THEREFORE.

EXPANSION JOINT STRIP SEAL

1. JOINTS SHALL BE ONE OF THE FOLLOWING OR AN APPROVED EQUAL:

   a) WATSON, BOWMAN AND ACME CORP. JOINT WITH A TYPE SE STEEL EXTRUSION AND A SE–400 STRIP SEAL.
   b) E–POXY INDUSTRIES, INC. JOINT WITH A TYPE A STEEL EXTRUSION AND AEVA–SEAL BS 500 STRIP SEAL.

2. JOINTS OTHER THAN THOSE LISTED ABOVE MAY BE SUBMITTED FOR APPROVAL PROVIDED THEY ARE SIMILAR TO THAT SHOWN IN SECTION ABOVE AND CAN DEMONSTRATE BY TEST, THE DESIGN MOVEMENTS FROM AN INITIAL SETTING OF 50mm. ACTUAL OPENING DISTANCE WILL BE DETERMINED BY TEMPERATURE TABLE.

   DELTA (CONCRETE) = L(M) * 0.0000108(M/M) * CHANGE IN TEMPERATURE (°C), WHERE L=28.0.

3. CONTRACTOR SHALL SUBMIT SHOP DRAWINGS FOR THE JOINTS SHOWING ALL FABRICATION DETAILS AND MATERIAL SPECIFICATIONS ACCORDING TO SPECIFICATION REQUIREMENTS. (SEE NOTE NO. 5)

4. THE JOINTS SHALL BE INSTALLED IN ACCORDANCE WITH THE MANUFACTURER'S INSTRUCTIONS. A REPRESENTATIVE OF THE MANUFACTURER SHALL BE PRESENT AT THE SITE DURING INSTALLATION.

5. STEEL EXTRUSIONS RAILS, ANGLES AND COVER PLATE SHALL CONFORM TO AASHTO M 270M, GRADE 250, AND SHALL BE GALVANIZED IN ACCORDANCE WITH AASHTO M298, CLASS 50 OR M232 AFTER FABRICATION. NEOPRENE STRIP SEAL SHALL CONFORM TO THE PHYSICAL PROPERTIES PRESCRIBED IN TABLE 1 AASHTO M220.

6. STEEL EXTRUSION RAILS AND ANGLES SHALL BE FABRICATED TO CONFORM TO THE LONGITUDINAL GRADE AND ROADWAY CROWN AT APPROACH SLABS ON SLEEPER FOOTINGS.

FIXED JOINT SEAL

7. MATERIAL AND CONSTRUCTION OF JOINT SEALANT SHALL CONFORM TO THE REQUIREMENTS OF SECTION 712 OF FP–03. THE CONCRETE JOINT–SEALER SHALL MEET ALL REQUIREMENTS OF AASHTO M173 AND THE BACKER ROD SHALL MEET THE REQUIREMENTS OF ASTM D 5249, TYPE 1.

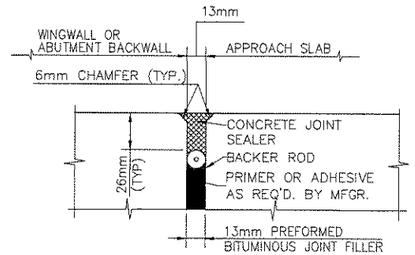

DETAIL 1

SCALE: NTS

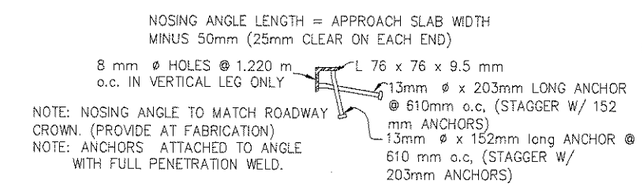

NOSING ANGLE DETAIL

N.T.S.

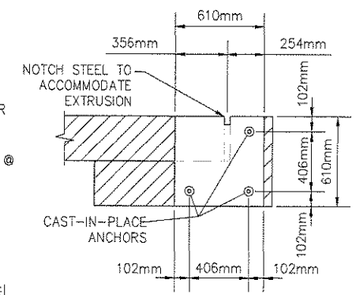

COVER PLATE DETAIL

13mm PLATE THICKNESS
SCALE: N.T.S.

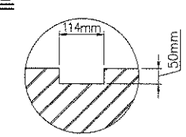

COVER PLATE NOTCH DETAIL

SCALE: N.T.S.

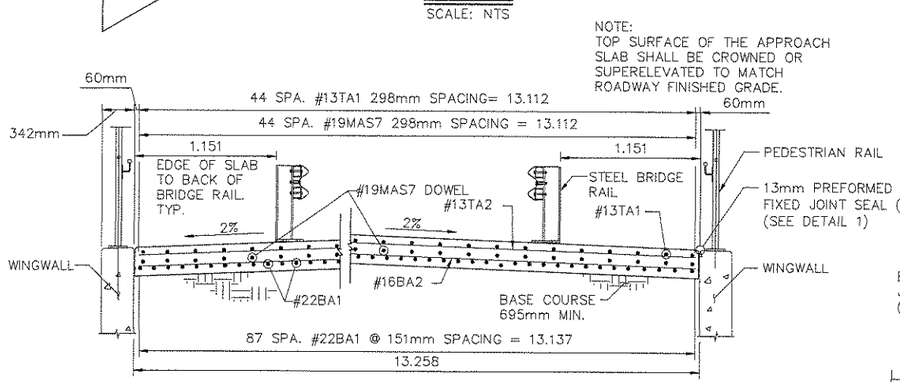

SECTION A–A (NORMAL TO ℄ RDWY.)

SCALE: NTS

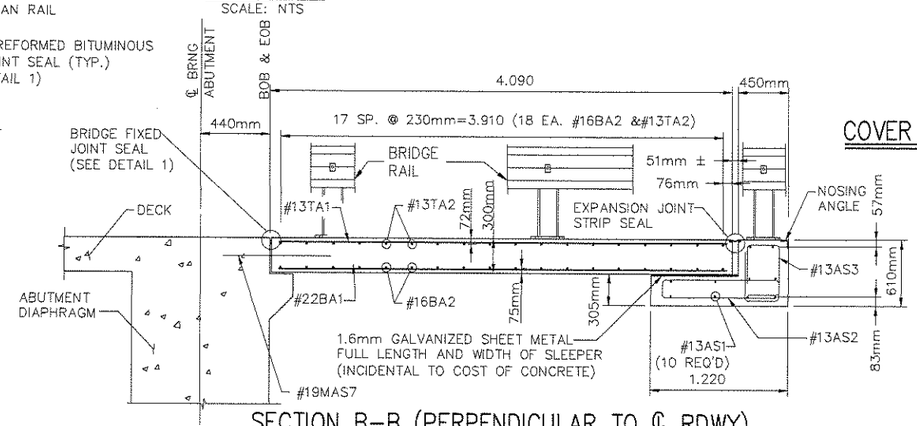

SECTION B–B (PERPENDICULAR TO ℄ RDWY)

SCALE: NTS

UNITED STATES
DEPARTMENT OF THE INTERIOR
BUREAU OF INDIAN AFFAIRS
NAVAJO REGIONAL OFFICE * DIVISION OF TRANSPORTATION

APPROACH SLAB

Designed by:		
Drawn by: RLC, cdh	Date: 08/07/09	
Revised by:	Date:	
File Name: N46_Approach_Slab.dwg		

REGION	STATE	RESERVATION	ROUTE	PROJECT NO.	SHEET	TOTAL SHEETS
NAVAJO	NEW MEXICO	NAVAJO	N46	N46(1)1,2&4	35	58

REINFORCING BAR SCHEDULE

SUPERSTRUCTURE

MARK	SIZE	TYPE	No. Reqd	LENGTH	a	b	c	d	REMARK
DECK (1 SET REQUIRED)									
#16MTL1	16	1	172	11.670					*
#22MTL2	22	1	86	12.210					*
#16MTL3	16	1	86	16.560					*
#16MBL1	16	1	186	14.200					*
#16MBL2	16	1	62	9.370					*
#16MTT1	16	1	281	13.790					*
#16MBT1	16	1	281	13.790					*
#16MTT2	16	1	2	13.662					*DECREASE BY
THRU									EQUAL INCREMENTS
#16MTT43	16	1	2	3.000					OF 260mm
#16MBT2	16	1	2	13.662					*DECREASE BY
THRU									EQUAL INCREMENTS
#16MBT43	16	1	2	3.000					OF 260mm
*#16MTT44	16	1	24	3.840					*
*#16MBT44	16	1	24	3.840					*
ABUT. NO. 1 DIAPH									
#16MD1	16	1	25	1.300					
#16MD2	16	1	20	2.750					
#16MD3	16	1	7	15.981					*
#16MD4	16	3	44	3.704	762mm	940mm	150mm		*
#16MD5	16	1	2	15.175					
#16MD6	16	8	51	830mm	280mm	100mm	130mm		
ABUT. NO. 2 DIAPH									
#16MD1	16	1	25	1.300					
#16MD2	16	1	20	2.750					
#16MD3	16	1	7	15.981					*
#16MD4	16	3	44	3.704	762mm	940mm	150mm		*
#16MD5	16	1	2	15.175					
#16MD6	16	8	51	830mm	280mm	100mm	130mm		
PIER DIAPHRAGM									
#16PD1	16	1	50	1.219					
#16PD2	16	1	40	3.000					
#16PD3	16	1	2	15.128					
#16PD4	16	3	52	4.000	880mm	970mm	150mm		*
APPROACH SLAB @ ABUT. 1									
#13TA1	13	1	45	3.910					*
#13TA2	13	1	18	15.191					*
#22BA1	22	1	88	3.903					*
#16BA2	16	1	18	15.191					*
#19MAS7	19	1	45	914mm					*
#13AS1	13	1	10	15.191					*
#13AS2	13	5	45	2.881	1.116	172mm			*
#13AS3	13	5	45	1.945	470mm	350mm			*
APPROACH SLAB @ ABUT. 2									
#13TA1	13	1	45	3.910					*
#13TA2	13	1	18	15.191					*
#22BA1	22	1	88	3.903					*
#16BA2	16	1	18	15.191					*
#19MAS7	19	1	45	914mm					*
#13AS1	13	1	10	15.191					*
#13AS2	13	5	45	2.881	1.116	172mm			*
#13AS3	13	5	45	1.945	470mm	350mm			*

NOTE: DIMENSIONS ARE IN METERS UNLESS OTHERWISE NOTED.
BAR DIMENSIONS TO CENTERLINE OF BAR U.N.O.
* DENOTES EPOXY COATED REBAR

REINFORCING BAR SCHEDULE

SUBSTRUCTURE

MARK	SIZE	TYPE	No. Reqd	LENGTH	a	b	c	d	REMARKS
ABUT NO. 1 CAP									
#29MA1	29	1	4	15.175					
#29MA2	29	1	4	15.175					
#16MA3	16	1	8	15.175					
#16MA4	16	13	62	3.316	762mm	746mm	150mm		
#16MA5	16	2	15	1.644	744mm	450mm			
#19MA6	19	1	4	3.305					
#19MA7	19	9	124	1.261	200mm	861mm			
#16MA8	16	11	8	1.728	706mm	500mm			
ABUT NO. 2 CAP									
#29MA1	29	1	4	15.175					
#29MA2	29	1	4	15.175					
#16MA3	16	1	8	15.175					
#16MA4	16	13	62	3.316	762mm	746mm	150mm		
#16MA5	16	2	15	1.644	744mm	450mm			
#19MA6	19	1	4	3.305					
#19MA7	19	9	124	1.261	200mm	861mm			
#16MA8	16	11	8	1.728	706mm	500mm			
PIER CAP									
#29PA1	29	1	4	15.308					
#29PA2	29	1	4	15.308					
#16PA3	16	1	8	15.308					
#16PA4	16	13	63	3.718	896mm	848mm	150mm		
#16PA5	16	2	17	1.761	861mm	450mm			
#19PA6	19	1	4	3.253					
#19PA7	19	9	64	1.400	200mm	1.000			
#16PA8	16	11	8	2.080	880mm	600mm			
PIER WALL									
#19PW1	19	1	112	5.088					
#19PW2	19	14	36	1.757	591mm	710mm			
#19PW3	19	1	2	14.575					17
THRU									EQUAL INCREMENTS
#19PW20	19	1	2	16.275					OF 100mm
WING WALL BARS @ ABUT. 1									
#22WW1	22	1	12	4.067					FIELD CUT SHORT LEG
#22WW2	22	1	4	3.874					DECREASE BY
THRU									EQUAL INCREMENTS
#22WW9	22	1	4	1.207					OF 381mm
#16WW10	16	7	4	3.550	3.257	350mm			y = SEE SHEET 27
#16WW11	16	1	16	1.563					
#16WW12	16	1	4	1.520					DECREASE BY
THRU									EQUAL INCREMENTS
#16WW21	16	1	4	462mm					OF 127mm
#22WW22	22	10	7	2.500	900mm	800mm			
#22WW23	22	7	7	2.000	1.000	1.000			y = 60°
#22WW24	22	12	7	1.660	830mm	830mm			
#22WW25	22	7	7	1.660	830mm	830mm			y = 60°
WING WALL BARS @ ABUT 2									
#22WW1	22	1	12	4.067					FIELD CUT SHORT LEG
#22WW2	22	1	4	3.874					DECREASE BY
THRU									EQUAL INCREMENTS
#22WW9	22	1	4	1.207					OF 381mm
#16WW10	16	7	4	3.550	3.257	350mm			y = SEE SHEET 27
#16WW11	16	1	16	1.563					
#16WW12	16	1	4	1.520					DECREASE BY
THRU									EQUAL INCREMENTS
#16WW21	16	1	4	462mm					OF 127mm
#22WW22	22	10	7	2.500	900mm	800mm			
#22WW23	22	7	7	2.000	1.000	1.000			y = 60°
#22WW24	22	12	7	1.660	830mm	830mm			
#22WW25	22	7	7	1.660	830mm	830mm			y = 60°

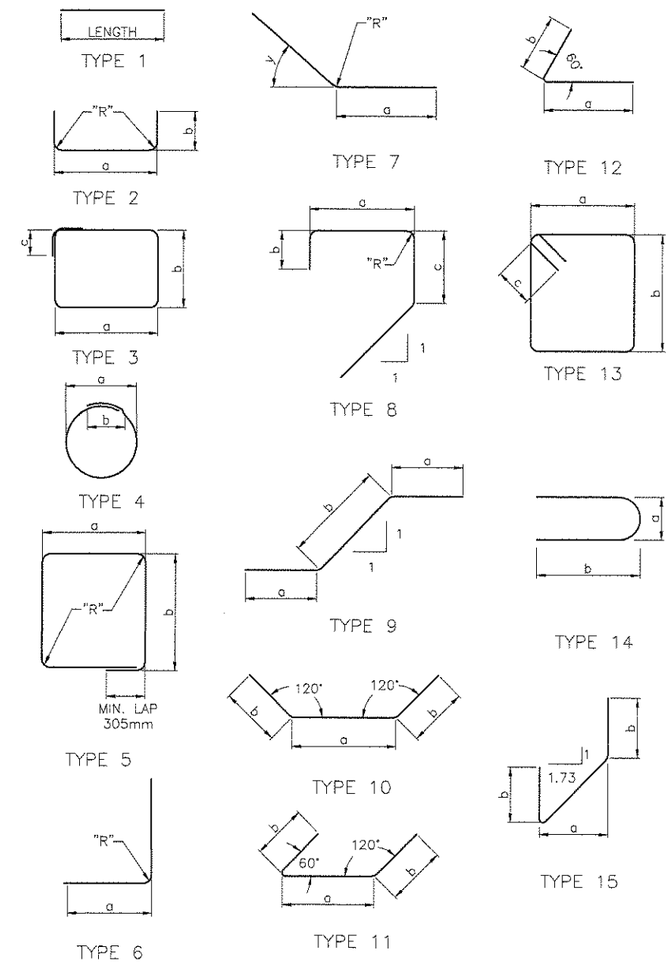

UNITED STATES
DEPARTMENT OF THE INTERIOR
BUREAU OF INDIAN AFFAIRS
NAVAJO REGION OFFICE * DIVISION OF TRANSPORTATION

REINFORCING SCHEDULE

Designed by:	
Drawn by: RLC, rsh	Date: 9-05
Revised by:	Date:
File Name: N46_Rnfschd.dwg	

REGION	STATE	RESERVATION	ROUTE	PROJECT NO.	SHEET	TOTAL SHEETS
NAVAJO	NEW MEXICO	NAVAJO	N46	N46(1)1,2&4	36	58

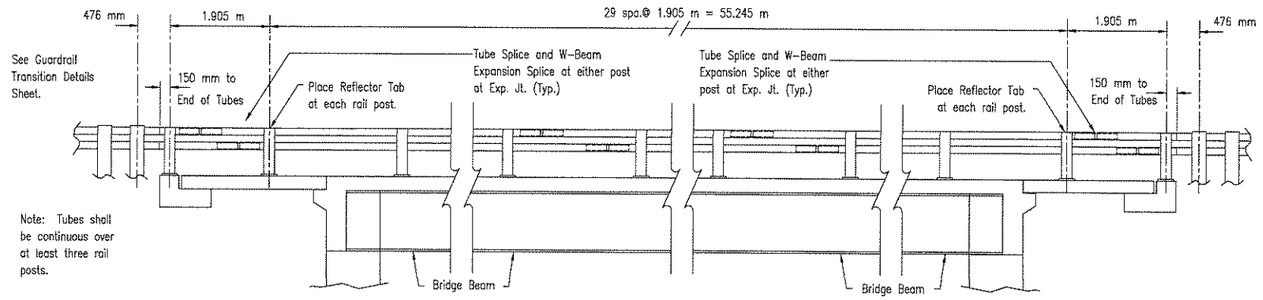

BRIDGE RAIL ELEVATION

N.T.S.

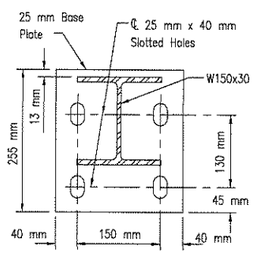

BASEPLATE DETAIL

(AASHTO M270M, Grade 250, galv.)

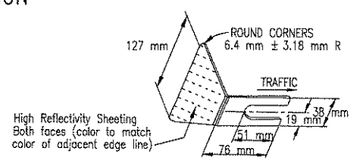

REFLECTOR TAB DETAIL SHEETING ON BOTH SIDES

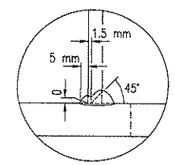

DETAIL C

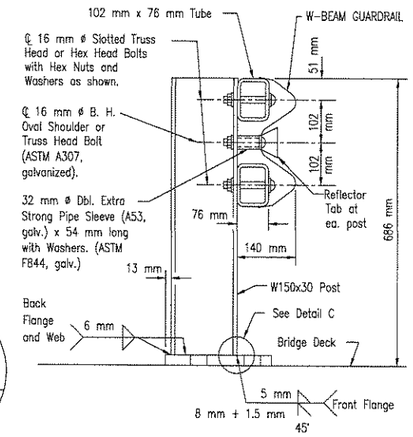

Note: In lieu of Front Flange Weld shown, a 9.5 mm fillet weld all around including edges of flange may be used.

ELEVATION OF RAIL POST

GENERAL NOTES

1. Panel lengths of tube members shall be attached continuously to a minimum of three posts (except at abutments with expansion joints). Tube splice assemblies shall be provided at a 15 m maximum spacing throughout the bridge railing.
2. Rail posts shall be placed as shown and perpendicular to the adjacent roadway grade. They may be vertical to normal roadway cross slopes, and shall be perpendicular to super elevated roadway cross slopes. The face of railing shall have a smooth transition between normal and super elevated positions. Metal shims shall be used where necessary.
3. All nuts, bolts, washers, anchorage plates, bottom plates and necessary hardware are considered as part of the rail for payment.
4. All steel components except reinforcing steel and bolt anchorage plates shall be galvanized unless otherwise shown in plans.
5. Anchor bolts shall be M20x2.5 AASHTO M 164M, Type 1, galvanized bolts. Each bolt shall have a hardened steel washer and a 51 mm plain steel washer, M293M, galvanized. Nuts shall conform to AASHTO M291M Class 10S, Class 2A or 2B fit tolerances and be heavy hex, galvanized nuts.
6. All tubes and tube sleeve dimensions shall be as shown in the Tube Sleeve Table. All posts, plates and shims shall conform to AASHTO M270M, Grade 250.
7. All W-Beam and W-Beam connection hardware shall conform to the requirements of AASHTO M180M, Class A, Type 1, galvanized.
8. Shop drawings shall be submitted for approval at least 14 days prior to the fabrication of the bridge rail components.
9. Selected dimensions shown in dual dimensions.
10. Furnishing and placement of Yellow Reflective Sheeting and Reflective tabs, ASTM A1011M, Class CS, galvanized, shall be considered incidental to Item 61701-500 and no direct payment shall be made therefore.

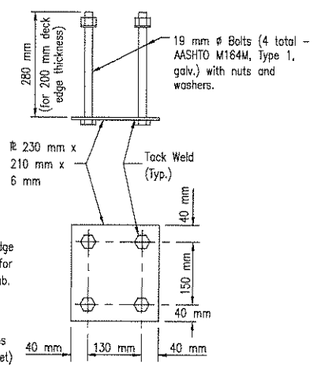

RAIL POST ANCHOR

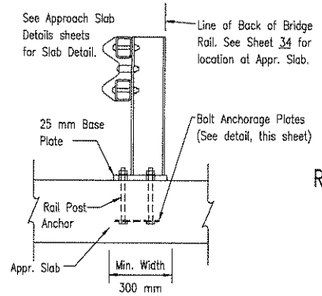

APPROACH SLAB INSTALLATION

SPLICE	a	b
Regular	51 mm	108 mm
Expansion	70 mm	89 mm

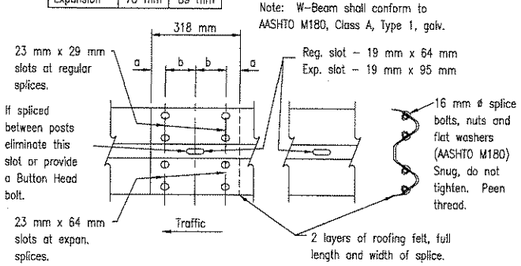

Note: W-Beam shall conform to AASHTO M180, Class A, Type 1, galv.

W-BEAM RAIL DETAILS

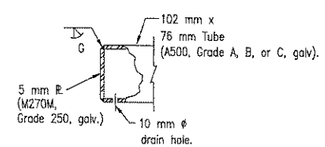

TUBE END CAP

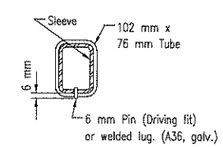

Note: The difference between the outside dimensions of the sleeve and the inside dimensions of the rail shall not exceed 3 mm along either axis.

TUBE SPLICE SECTION

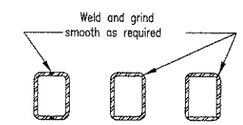

SLEEVE FABRICATION OPTIONS

TUBE & SLEEVE MEMBERS		
Rail Member		Sleeve Thickness
Material	Thickness	Material: A36
A500 Gr.C	4.8 mm	4.7 mm
A500 Gr.B	6.4 mm	6.4 mm
A500 Gr.A	7.9 mm	6.4 mm

Note: Other sections of equal or greater strength are acceptable for sleeves.

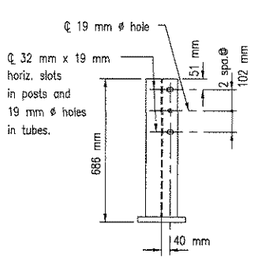

BRIDGE RAIL POST FOR CONCRETE DECK AND WINGWALL

NOTE: Provide galvanized steel (A36) shims, or raised grout pad to provide for vertical bridge rail post installation.

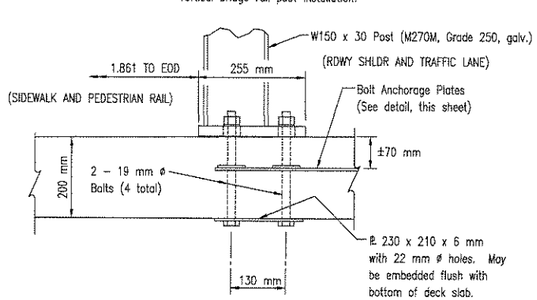

CONCRETE DECK INSTALLATION DETAILS

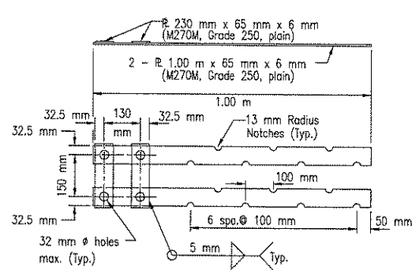

Note: Install one (1) assembly in deck slab at each bridge rail post. Field cut or bend as required to fit special conditions. Do not galvanize or oil.

BOLT ANCHORAGE PLATES

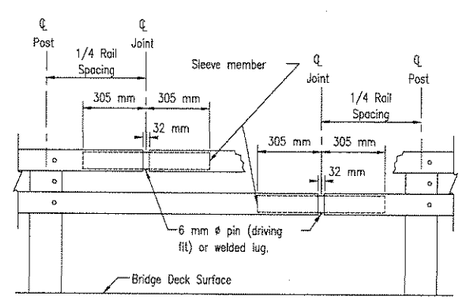

Note: W-Beam Rail not shown.

TUBE SPLICE DETAILS

UNITED STATES
DEPARTMENT OF THE INTERIOR
BUREAU OF INDIAN AFFAIRS
NAVAJO REGION OFFICE * DIVISION OF TRANSPORTATION

STEEL BRIDGE RAIL

Designed by: NRO-DOT	
Drawn by: RSH	Date: 08/07/09
Revised by:	Date:
File Name: STD-Steel_brdg_rail.dwg	

REGION	STATE	RESERVATION	ROUTE	PROJECT NO.	SHEET	TOTAL SHEETS
NAVAJO	NEW MEXICO	NAVAJO	N46	N46(1)1,2&4	37	58

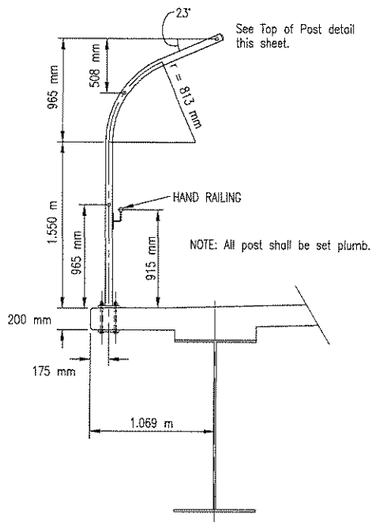

TYPICAL POST DETAIL

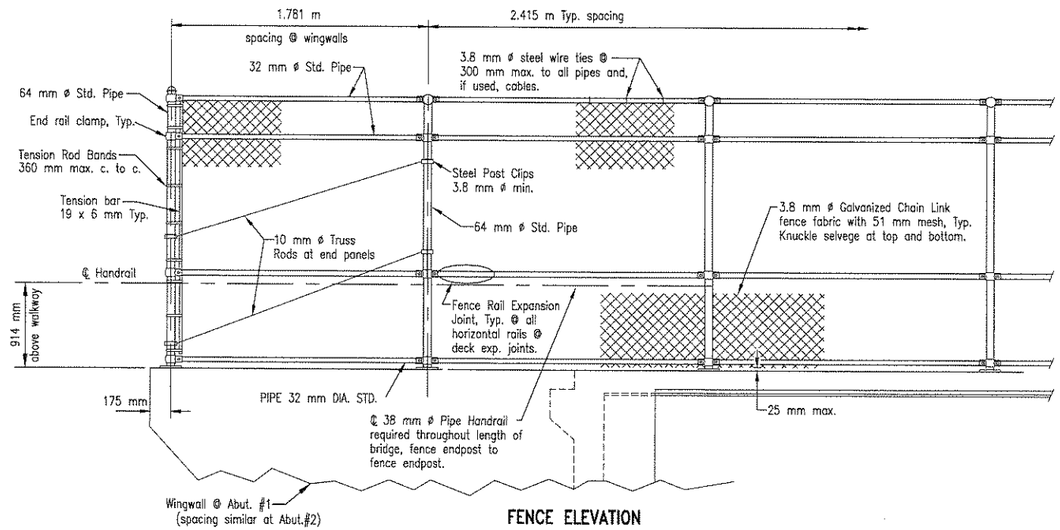

FENCE ELEVATION

NOTES

1. All metal components of the pedestrian fence, including fence fabric, posts, rails and all associated hardware shall be galvanized steel in accordance with AASHTO M181, Type I or Type II. For Type I the fence fabric coating shall be Class A. Galvanizing shall conform to AASHTO M111 or AASHTO M232 depending on the material being coated.
2. Fabrication and erection of the pedestrian fence shall conform to Section 619 of the FP-03, the Supplemental Specifications and the construction plans for this project.
3. Tubular steel rails, tubular hand railing, tubular steel posts and steel expansion sleeves for tubular rails shall conform to ASTM A500, Grade B. Bolts, threaded rods, nuts, U bolts and washers shall conform to ASTM A307 and shall be galvanized. Bars, plates and other steel assembly hardware shall conform to AASHTO M270M, Grade 250.
4. Caulk around post base plates and bolt holes with a cold applied, non-sagging compound conforming to ASTM C 920, Type S, Grade NS, Class 25.
5. Expansion Joints for fence rails shall be installed in the pedestrian fence above deck expansion joints at Abutments #1 and #2.
6. All galvanizing that has been damaged in handling, transportation installation or welding shall be repaired by the application of a paste compound of an approved zinc powder and flux.
7. All exposed edges shall be smooth.
8. All bolt heads shall be positioned so that the heads are towards the pedestrian walkway.

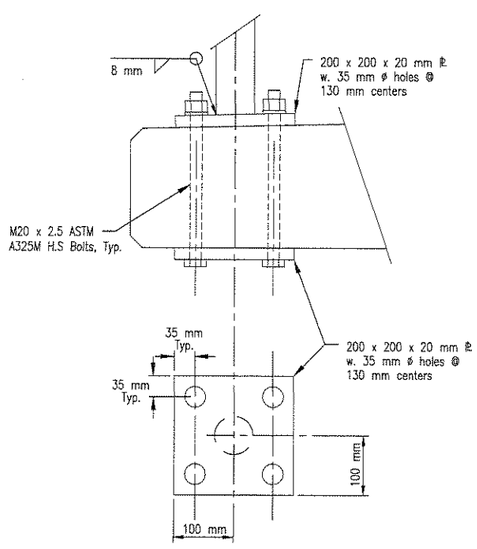

POST ANCHOR DETAIL AT DECK EDGE

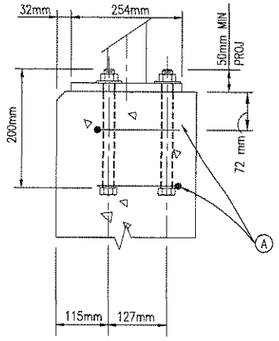

POST ANCHOR DETAIL AT WINGWALL

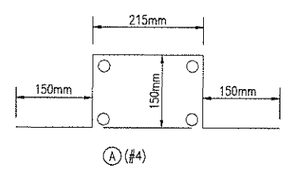

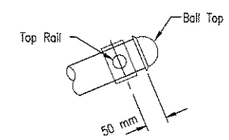

TOP OF POST DETAIL

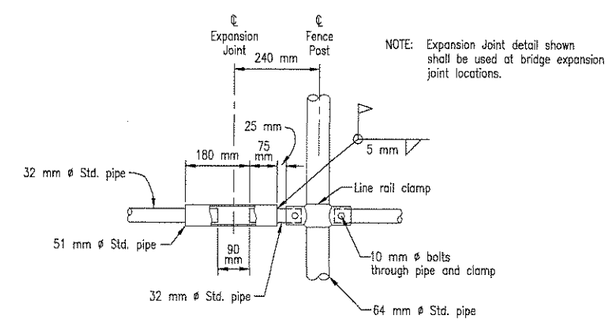

FENCE RAIL EXPANSION JOINT, TYP.
N.T.S.

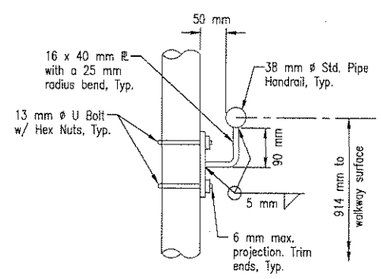

HANDRAIL END VIEW

NOTE: Expansion Joint detail shown shall be used at bridge expansion joint locations and rail splices.

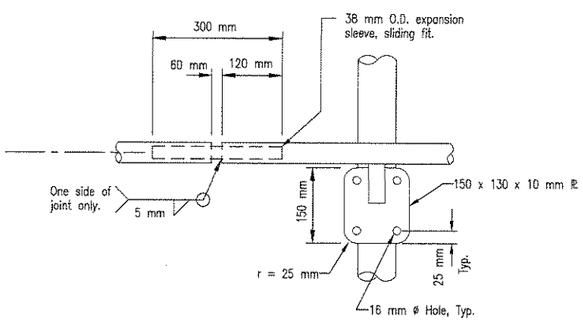

HANDRAIL SPLICE AND EXPANSION JOINT

UNITED STATES
DEPARTMENT OF THE INTERIOR
BUREAU OF INDIAN AFFAIRS
NAVAJO REGION OFFICE * DIVISION OF TRANSPORTATION

PEDESTRIAN FENCE DETAILS

Designed by: NRDOT	
Drawn by: rsh	Date: 09-05
Revised by:	Date:
File Name: N46_Ped Fence.dwg	

NOTES

1. Construct Sidewalk Joints In Accordance With Subsection 615.04(a) of FP-03, Except the Maximum Spacing of Expansion Joints Shall Be 6 Meter, and Contraction Joints Shall Be Spaced at 1.5 m Intervals.
2. Joints Between Sidewalks and Sleeper Slabs Shall Be In Accordance With Subsection 615.04(a)(1), Expansion Joints, of FP-03.
3. See Sheet 39 for additional sidewalk details.

REGION	STATE	RESERVATION	ROUTE	PROJECT NO.	SHEET	TOTAL SHEETS
NAVAJO	NEW MEXICO	NAVAJO	N46	N46(1)1,2&4	38	58

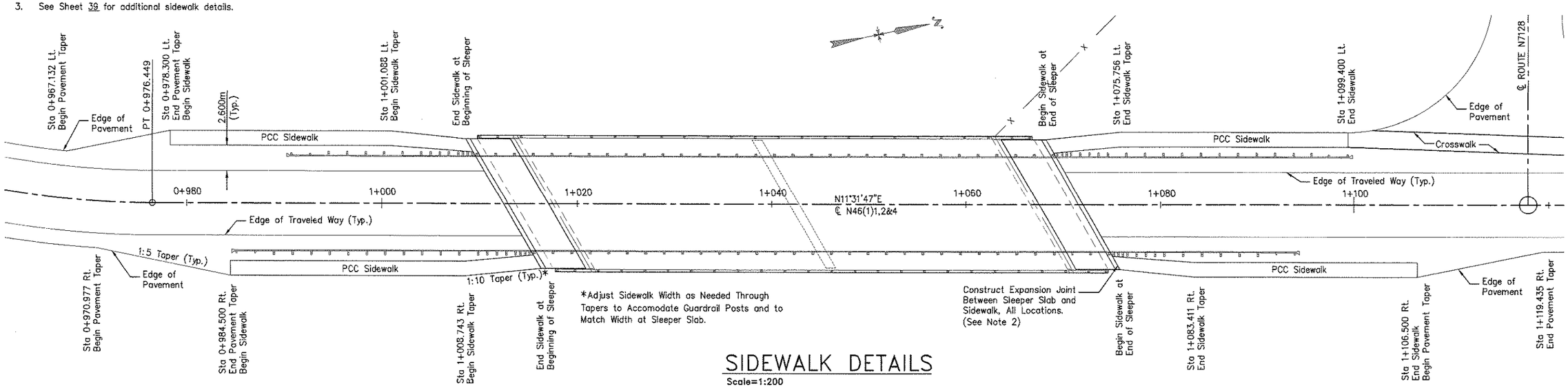

SIDEWALK DETAILS

Scale=1:200

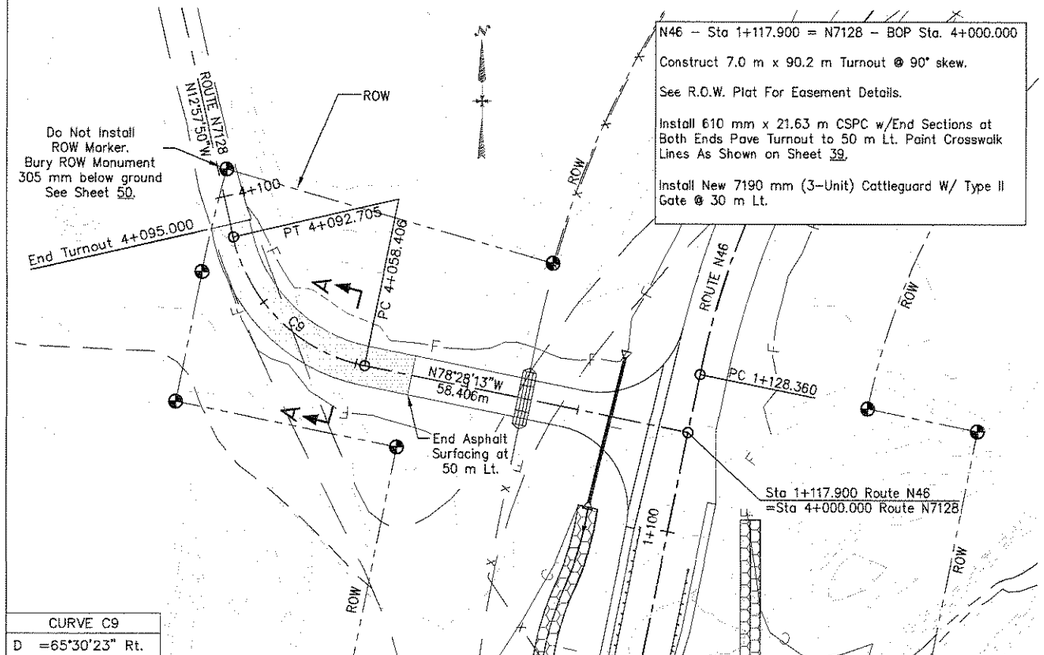

N46 – Sta 1+117.900 = N7128 – BOP Sta. 4+000.000

Construct 7.0 m x 90.2 m Turnout @ 90° skew.

See R.O.W. Plat For Easement Details.

Install 610 mm x 21.63 m CSPC w/End Sections at Both Ends Pave Turnout to 50 m Lt. Paint Crosswalk Lines As Shown on Sheet 39.

Install New 7190 mm (3-Unit) Cattleguard W/ Type II Gate @ 30 m Lt.

N7128 PLAN

Scale=1:500

CURVE C9
D =65°30'23" Rt.
Dc =190°59'09"
R = 30.000m
T = 19.299m
L = 34.299m
e = NC
PI
STA = 4+077.705
N = 551590.185
E = 846949.712

N7128 ALIGNMENT				
ALIGN POINT	STATION	BEARING	NORTHING	EASTING
BOP Turnout	4+000.000	N78°28'13"W	551574.654	847025.849
PC C9	4+058.406	N78°28'13"W	551586.328	846968.621
PI C9	4+077.705	N12°57'50"W	551590.185	846949.712
PT C9	4+092.705	N12°57'50"W	551608.992	846945.382
EOP Turnout	4+095.000	N12°57'50"W	551611.229	846944.867

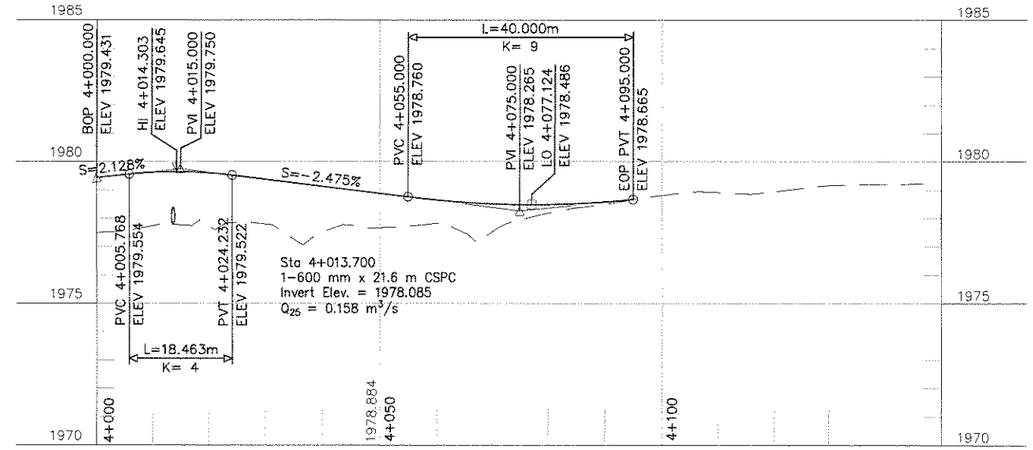

N7128 PROFILE

Scale=1:500 H
Scale=1:100 V

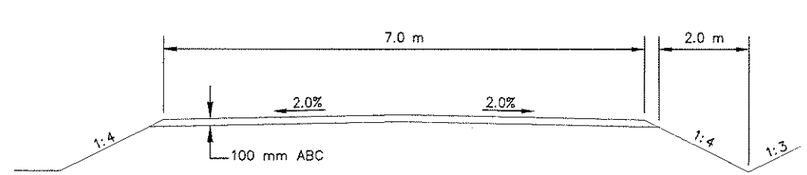

SECTION A-A

Sta 4+050.000 to Sta 4+095.000
Use Typical Type "A" Turnout Details, Sheet 39,
From Sta 4+004.800 to 4+050.000

From Sta 4+085.000 to Sta 4+095.000 Taper ABC & Ditch Lines To Match Existing Road/Ditch Section.

UNITED STATES
DEPARTMENT OF THE INTERIOR
BUREAU OF INDIAN AFFAIRS
NAVAJO REGION OFFICE * DIVISION OF TRANSPORTATION

CONSTRUCTION & SIDEWALK DETAILS

Designed by: RDL	
Drawn by: RDL, cdh	Date: 08/25/09
Revised by:	Date:
File Name: N46_Construction Details	

REGION	STATE	RESERVATION	ROUTE	PROJECT NO.	SHEET	TOTAL SHEETS
NAVAJO	NEW MEXICO	NAVAJO	N46	N46(1)1,2&4	39	58

GENERAL NOTES

1. WORKMANSHIP AND MATERIALS SHALL CONFORM TO THE STANDARD SPECIFICATION FOR CONSTRUCTION OF ROADS AND BRIDGES ON FEDERAL HIGHWAY PROJECTS FP-03 ALONG WITH ALL SUPPLEMENTAL SPECIFICATIONS FOR THIS PROJECT.
2. ALL CONCRETE TO BE AIR ENTRAINED WITH A MINIMUM COMPRESSIVE STRENGTH OF 25 MPa IN 28 DAYS. ALL CONCRETE SHALL CONFORM TO SECTION 601 "MINOR CONCRETE STRUCTURES" OF THE FP-03.
3. IN NO CASE SHALL ANY BACK FILLING OR PAVING BE ALLOWED UNTIL THE CONCRETE HAS ATTAINED A MINIMUM COMPRESSIVE STRENGTH OF 17.2 MPa.
4. ALL SUBGRADE SOILS IN AREAS WHERE SIDEWALK IS BEING PLACED SHALL BE COMPACTED TO AT LEAST 95% OF MAXIMUM DENSITY AS DETERMINED BY AASHTO T-99, METHOD (C). ANY UNSUITABLE SUBGRADE MATERIALS ENCOUNTERED SHALL BE REMOVED AND REPLACED WITH SELECT BACK FILL MATERIAL CONFORMING TO AASHTO (A-2-4) OR BETTER, AS DIRECTED BY THE COTR/AOTR AND AT NO ADDITIONAL COST TO THE GOVERNMENT.
5. ALL PREFORMED JOINT FILLER SHALL BE IN ACCORDANCE WITH SECTION 712.01(b), BITUMINOUS TYPE OF THE FP-03. THE CONTRACTOR SHALL SUBMIT A PROPOSAL ON THE TYPE OF FILLER AND METHOD OF INSTALLATION TO BE USED FOR REVIEW AND APPROVAL BY THE COTR/AOTR PRIOR TO INSTALLATION. THIS MATERIAL AND THE INSTALLATION THEREOF SHALL BE CONSIDERED INCIDENTAL TO ITEM 61501-0100.
6. THE CONTRACTOR WILL BE REQUIRED TO MAKE ANY AND ALL NECESSARY FIELD ADJUSTMENTS TO MATCH FIELD CONDITIONS AS DIRECTED BY THE COTR/AOTR THIS WORK SHALL BE INCIDENTAL TO COMPLETION OF THE PROJECT AND NO ADDITIONAL PAYMENT WILL BE MADE.
7. TACK COAT MATERIAL SHALL MEET FP-03 SECTION 412, SHALL BE APPLIED TO ALL VERTICAL PCC EDGES ABUTTED BY NEW ASPHALT SURFACING. TACK COAT SHALL BE APPLIED USING BRUSHES OR SPRAY EQUIPMENT TO THE SATISFACTION OF THE COTR/AOTR TACK COAT SHALL NOT BE 'DRIBBLED' OR 'POURED' ON USING SHOVELS, BUCKETS OR SIMILAR EQUIPMENT. PCC EDGES SHALL BE CLEAN AND DRY AS APPROVED BY THE COTR/AOTR TACK COAT WILL BE INCIDENTAL TO BID ITEM 61501-0100.

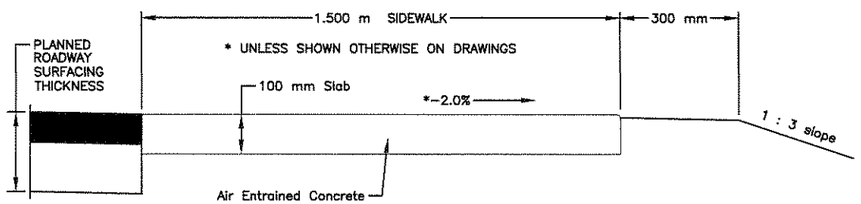

TYPICAL SECTION @ SIDEWALK

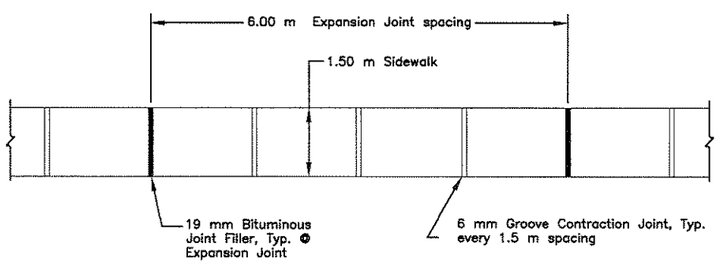

SIDEWALK JOINT DETAIL - PLAN VIEW

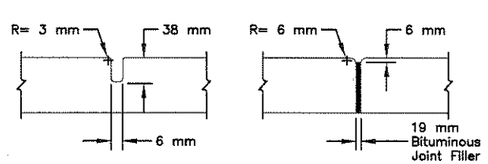

CONTRACTION JOINT EXPANSION JOINT

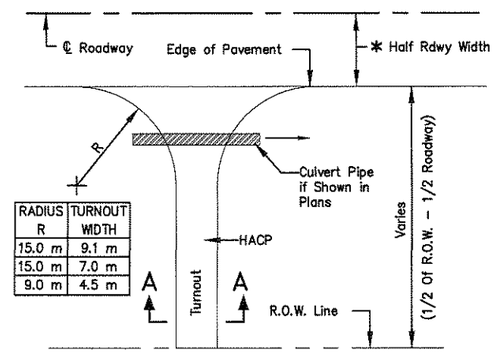

RADIUS R	TURNOUT WIDTH
15.0 m	9.1 m
15.0 m	7.0 m
9.0 m	4.5 m

TYPICAL TYPE "A" TURNOUT

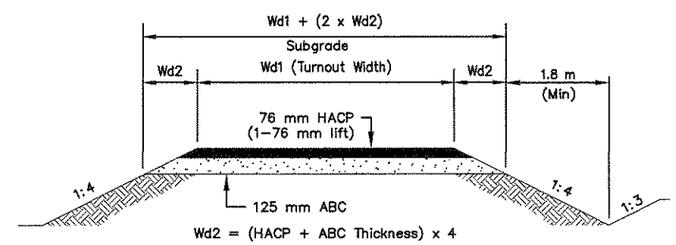

SECTION A-A

STOP SIGN AND STOP BAR LOCATION TABLE		
EDGE OF PVMT. RADIUS (m)	X (m)	LO (m)
3.00	1.80	1.80
6.00	3.00	1.80
9.00	4.50	1.80
12.00	6.00	1.80
15.00	7.50	1.80

LO = Lateral Offset; radius edge of pavement to STOP sign location at distance X from edge of pavement of main roadway.

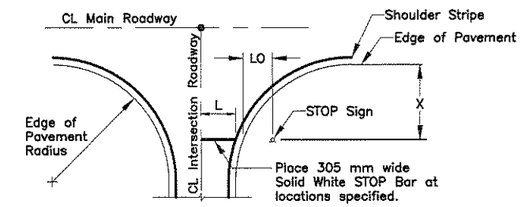

L = STOP Bar Length; CL of Intersection Roadway to Radius Shoulder Stripe, or to Radius Edge of Pavement if no Shoulder Stripe is specified.

STOP SIGN AND STOP BAR DETAILS @ INTERSECTIONS

SEE SHEET 4 OF 58 FOR STOP BAR LOCATIONS.

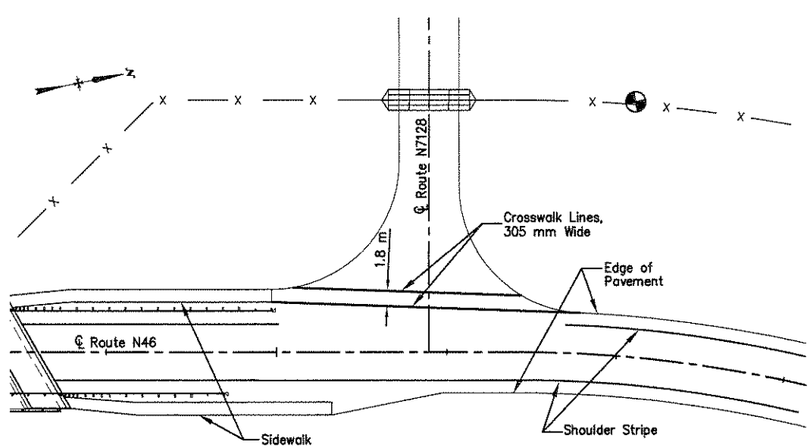

CROSSWALK DETAILS

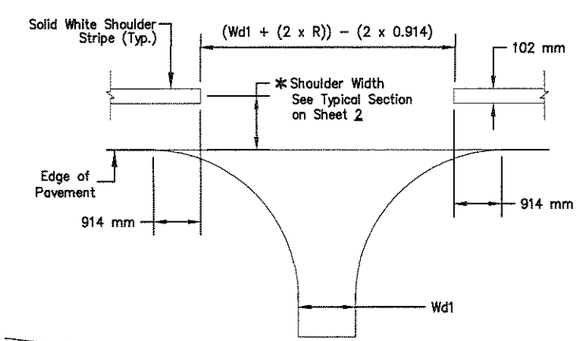

TYPICAL PAVEMENT MARKINGS @ TURNOUT

UNITED STATES
DEPARTMENT OF THE INTERIOR
BUREAU OF INDIAN AFFAIRS
NAVAJO REGION OFFICE * DIVISION OF TRANSPORTATION

TURNOUT DETAILS

Designed by: RDL	
Drawn by: RDL, cdh	Date: 08/25/09
Revised by:	Date:
File Name: N46_Turnout Details	

REGION	STATE	RESERVATION	ROUTE	PROJECT NO.	SHEET	TOTAL SHEETS
NAVAJO	NEW MEXICO	NAVAJO	N46	N46(1)1,2&4	40	58

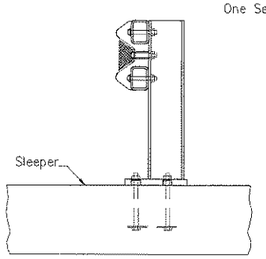

SECTION B-B
N.T.S.

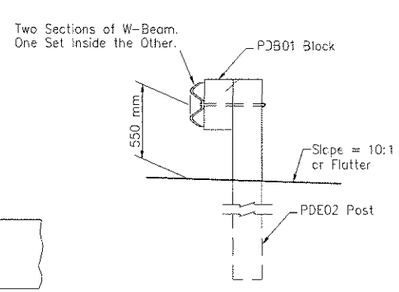

SECTION C-C
N.T.S.

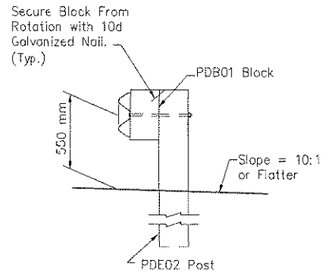

SECTION D-D
N.T.S.

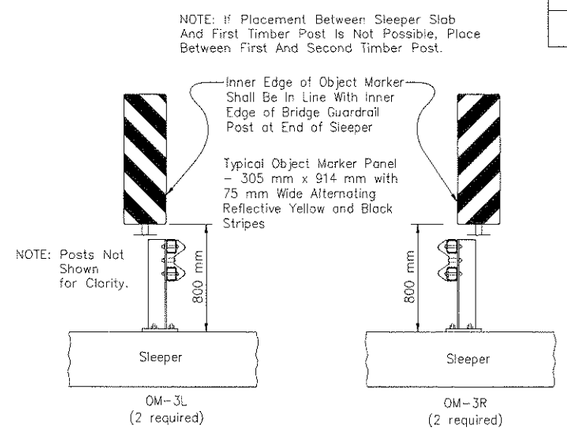

TYPE 3 OBJECT MARKER
STEEL BRIDGE RAIL INSTALLATION
N.T.S.

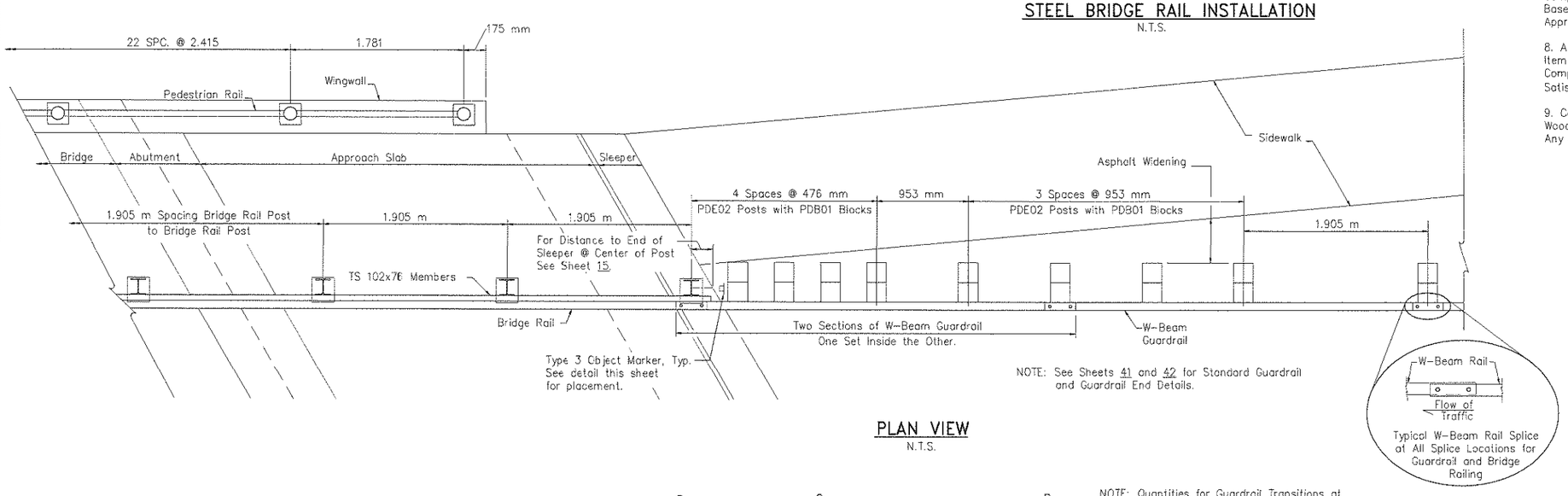

PLAN VIEW
N.T.S.

NOTE: Quantities for Guardrail Transitions at
Bridge Corners are included in Item 61701-5000.

See Sheets 41 and 42 for additional
Standard Guardrail Details.

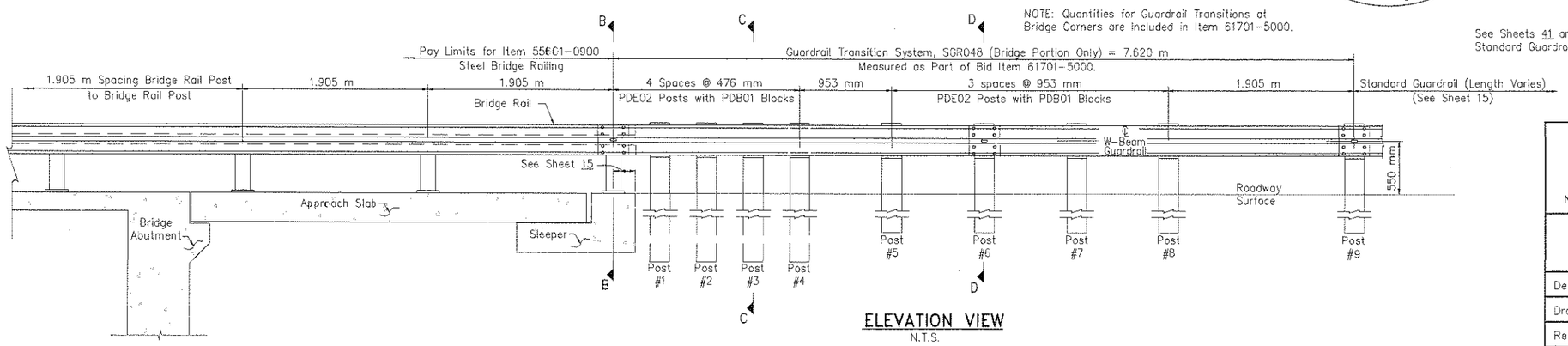

ELEVATION VIEW
N.T.S.

GENERAL NOTES

1. Standard Barrier Hardware Has Been Used to Develop This Guardrail Transition. Designations Provided in Brackets Relate to Standard Elements Detailed In "A Guide To Standard Highway Barrier Rail Hardware", AASHTO-AGC-ARTBA Joint Cooperative Committee and Modified Standard Elements As Detailed on This Sheet.

2. All W-Beams Shall Be Galvanized in Accordance With AASHTO M111. Furnishing, Fabricating and Installing These Items Shall Be Included in Item 61701-5000.

3. All High Strength Hex Bolts and Carriage Bolts Shall Be Galvanized in Accordance With AASHTO M232. Furnishing, Fabricating and Installing These Items Shall Be Considered Incidential to Item 61701-5000.

4. W-Beam Shall Conform to AASHTO M180, Class A, Type I, Galvanized.

5. Wood Blocks and Posts Shall Be Rough Sawn Lumber or Surfaced on Four Sides (S4S) Having a Minimum Bending Strength of 8.27 MPa. All Posts and Blocks Shall Be Treated in Accordance With AASHTO M133.

6. W-Beam Is Not Bolted to Posts and Blocks at Posts #1, #2, #3, #5, #7 and #8. Blocks Bolted Directly to Posts.

7. All Embankment and Aggregate Base Course Materials Shall Be Compacted to 95% of Maximum Density. Embankment and Aggregate Base Course Materials, and the Placing Thereof, Shall Be Paid under the Appropriate Bid Items shown shown in the Bid Schedule.

8. Asphaltic Concrete Used for Guardrail Widening Shall Be Included in Item 40201-0500. The Contractor Shall Be Required to Backfill and Compact Hot Asphalt Concrete Around the Guardrail Posts to the Satisfaction of the AOTR/COR per Section 617.03 of the FP-03.

9. Certificates of Compliance Shall Be Required for All Guardrail and Wood Post Materials and Associated Hardware Prior to Installation of Any Material Under Item 61701-5000.

UNITED STATES
DEPARTMENT OF THE INTERIOR
BUREAU OF INDIAN AFFAIRS
NAVAJO REGION OFFICE * DIVISION OF TRANSPORTATION

BRIDGE RAIL/ GUARDRAIL TRANSITION

Designed by: NRDOT	
Drawn by:	Date: 11-24-08
Revised by:	Date:
File Name: STD-Grail Transition	

REGION	STATE	RESERVATION	ROUTE	PROJECT NO.	SHEET	TOTAL SHEETS
NAVAJO	NEW MEXICO	NAVAJO	N46	N46(1)1,2&4	41	58

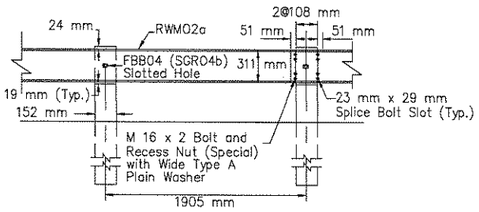

ELEVATION

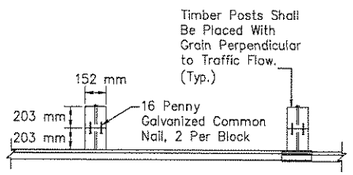

PLAN

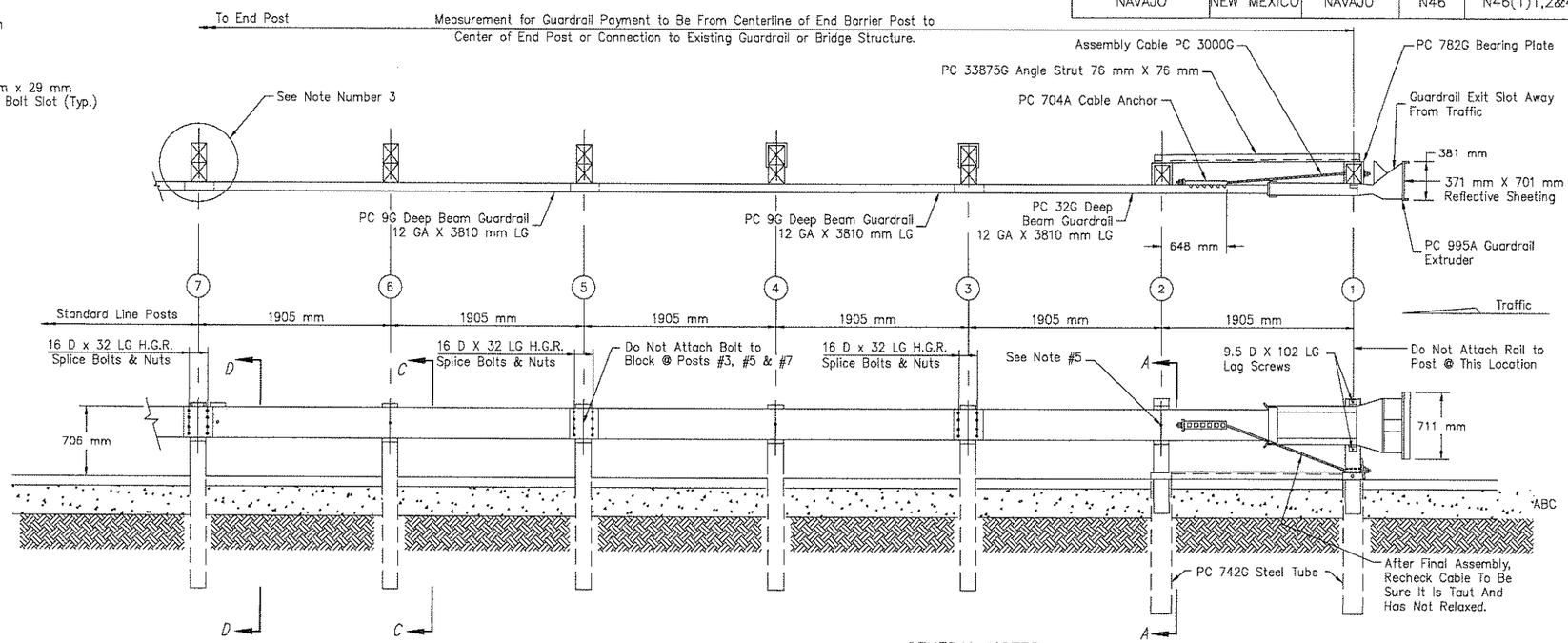

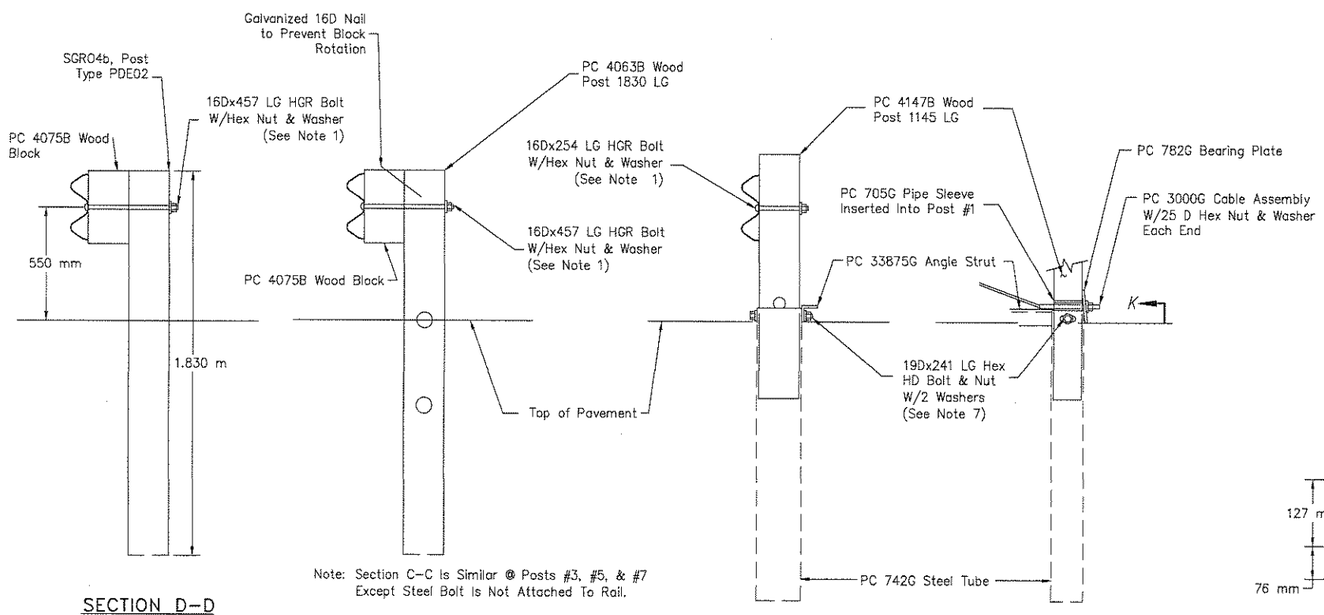

SECTION D–D
(@ Post #7 & Standard Line Post)

Note: Section C–C Is Similar @ Posts #3, #5, & #7 Except Steel Bolt Is Not Attached To Rail.

SECTION C–C
(@ Posts #4 & #6)

SECTION A–A
(@ Post #2)

PARTIAL VIEW @ POST #1

GENERAL NOTES

1. The 16 D Flat Washer is Used Under the Nut, Behind the Post Only. No Washer is Used at the Rail.
2. See Sheet 42 For Additional Notes.
3. The Contractor Has the Option to Use All Steel Posts After Post #7 on Standard Line Posts, Unless Otherwise Noted on the Design Plans. (If Steel Posts Are Approved, Rubber Blocks Will Be Required.)
4. When Used, Begin/End Asphalt Curb At Post #6.
5. Place Tabs on the W–Beam at Every Fourth Post. The Color of the Tabs Shall Conform to the Color of The Adjacent Edgeline. Begin Reflective Tabs on Post #2.
6. Angle Strut Must Be Attached Using 19D High Strength Bolts.
7. Bolt Must Be High Strength. Install So Nut & Washer Are on Traffic Side of Post. (See View K.)

BILL OF MATERIAL

PC	QTY	DESCRIPTION	PC	QTY	DESCRIPTION
9G	2	2.67/3.81/1.905/S (GUARDRAIL)	3500G	1	16 D x 254 HEX HD BOLT
32G	1	2.67/3.81/1.905/S ANC (GUARDRAIL)	3580G	5	16 D x 457 POST BOLT
60G	1	2.67/7.62/1.905/S (GUARDRAIL)	3700G	4	19 D WASHER
62G	1	2.67/7.62/1.905/S ANC (GUARDRAIL)	3704G	2	19 D HEX NUT
704A	1	CABLE ANCHOR BRACKET	3900G	2	25 D WASHER
705G	1	60 mmø x 140 – PIPE SLEEVE	3910G	2	25 D HEX NUT
740G*	2	1.375 mm – TUBE SLEEVE	4063B	5	WD 1829 mm Post 152 x 203 mm
742G	2	1.830 mm – TUBE SLEEVE	4075B	5	WD BLOCKOUT 152 x 203 x 356mm
769G*	1	460 x 610 x 6mm SOIL PLATE	4147B	2	WD 1143 mm POST 140 x 191 mm
782G	1	200 x 200 x 16 mm BEARING PLATE	4228G	2	9.5 D x 102 mm LAG SCREW
995A	1	GUARDRAIL EXTRUDER	5148G	2	19 D x 241 HEX HD BOLT
3000G	1	CABLE 19 mmø x 1981 mm	9852A**	1	STRUT
3300G	6	16 D WASHER	33875G	1	1980 mm ANGLE STRUT
3340G	30	16 D HGR NUT	6206G	1	325 x 700mm REFLECT SHEET – RL
3360G	24	16 D x 35 HGR SPLICE BOLT	6207B	1	325 x 700mm REFLECT SHEET – LL
3478G	1	16 D x 190mm HEX HD BOLT	* Option to the 1830mm Post Sleeve Tube		
3497G**	1	16 D x 240mm HEX HD BOLT	** Option to PC–33875G		

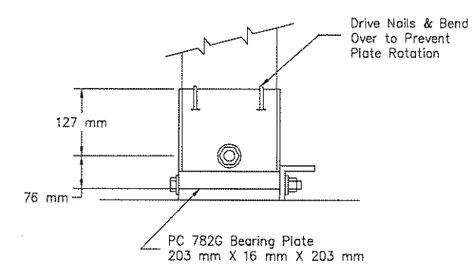

VIEW K
(Bearing Plate Orientation)

UNITED STATES
DEPARTMENT OF THE INTERIOR
BUREAU OF INDIAN AFFAIRS
NAVAJO REGION OFFICE * DIVISION OF TRANSPORTATION

STANDARD GUARDRAIL BARRIER END TREATMENT ET–PLUS FOR DESIGN SPEED <100km/h

Designed by: NRDOT	
Drawn by:	Date:
Revised by:	Date:
File Name: STD–ETPlus2	

REGION	STATE	RESERVATION	ROUTE	PROJECT NO.	SHEET	TOTAL SHEETS
NAVAJO	NEW MEXICO	NAVAJO	N46	N46(1)1,2&4	42	58

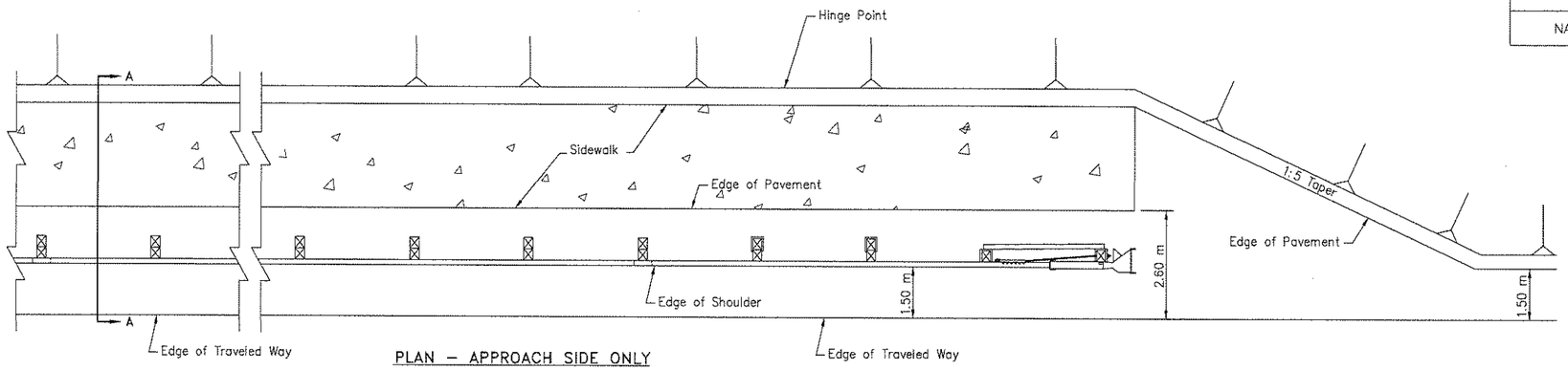

PLAN – APPROACH SIDE ONLY

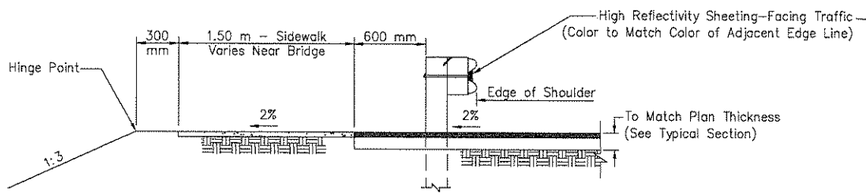

SECTION A–A

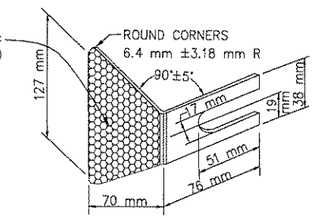

REFLECTOR TAB DETAIL

(Install on Every Fourth Post, Starting on Post #2)

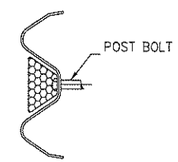

MOUNTING POSTION ON GUARD RAIL TYPE 3

GENERAL NOTES

1. All Guardrail W–Beams, End Treatment, and Terminal Connectors Shall Be Galvanized in Accordance with AASHTO M–180, Class A, Type 1 Specification. All Hardware Shall Conform to ASTM A–325 and be Galvanized in Accordance with ASTM A–153.
1. All Structural Steel Items Shown Shall Conform to AASHTO M270M, Grade 250 and Be Galvanized in Accordance with AASHTO M–111 Specification.
2. Wire Rope, Fittings and Hardware Shall Conform to AASHTO M–30 Specification Type II with a 19 mm Diameter and a Class B Zinc Coating.
3. Wood Posts and Blocks Shall Be Rough Sawn Lumber or S4S Having Minimum Bending Strength of 8.27 MPa (Single Member Use) and Meeting AASHTO M168 (21st Edition). All Posts Shall Be Treated in Accordance with AASHTO M–133 Specification.
4. All Embankment and Aggregate Base Course Materials Shall Be Compacted To 95% of Maximum Dry Density.
5. The Embankment Materials and the Placing Thereof are to be included in Items 20401–0000 and 61701–5000.
6. The Contractor Shall Be Required to Compact the Backfill and the Asphalt All Around Each Guardrail Post With Hand Tampers to Insure Integrity of the Pavement and Guardrail and to Prevent Seepage of Water Into the Pavement From the Guardrail Post Holes. This Work Shall Be Incidental Obligations of the Work Described Herein.
7. The Cost of the ET Plus Assembly and the Placing Thereof Shall Be Considered Incidental to Item 61701–5000, Which Includes Breakaway Posts, Steel Tube Assemblies and Hardware.
8. Placement of Hot Asphalt and ABC Material For Guardrail Widening Shall Be Included with Items 30101–2000 and 40201–0500.
9. Furnishing & Placement of 371 mm x 701 mm Reflective Sheeting, Reflective Tabs, and Guardrail Delineators Shall Be Considered Incidental to Item 61701–5000 and No Direct Payment Shall Be Made.
10. Any Related Patent Rights Will Be the Responsibility of the Contractor as Per Section 107.01 of FP–03.

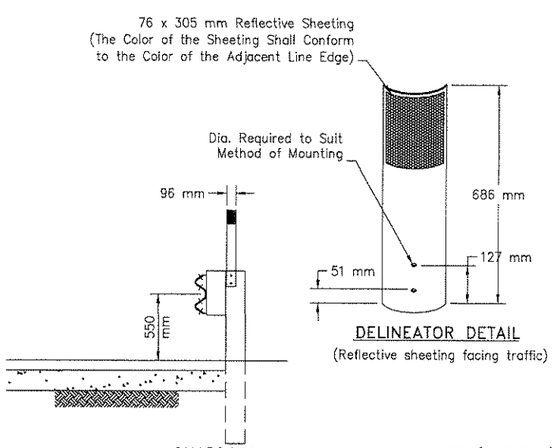

DELINEATOR DETAIL

(Reflective sheeting facing traffic)

GUARDRAIL MOUNTED DELINEATOR (TYPICAL)

(The delineator shall be placed at 5.72 meter spacing, around the outside of horizontal curve, or where the guardrail conflicts with Type "1a" delineator located on tangent segment of roadway.

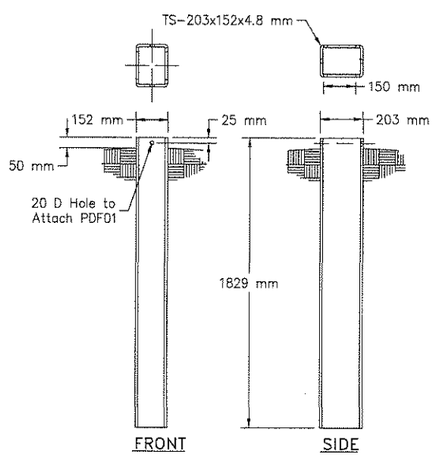

FOUNDATION TUBE

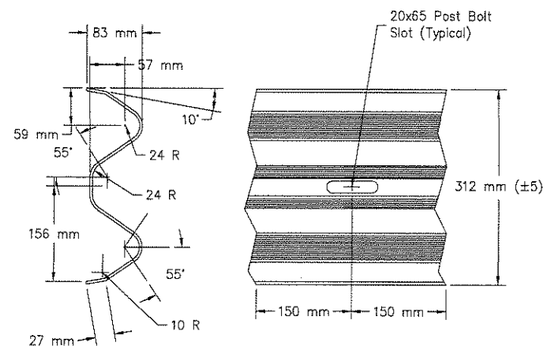

SECTION THRU GUARDRAIL ELEMENT

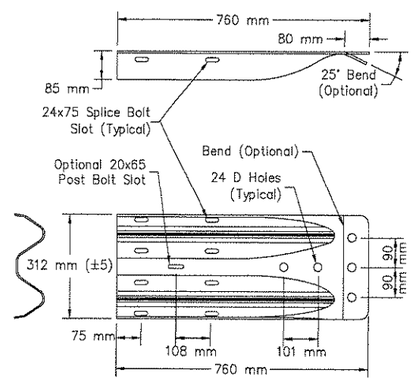

TERMINAL CONNECTOR

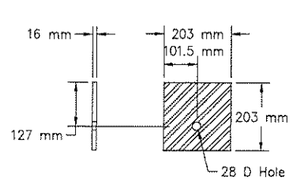

BEARING PLATE

UNITED STATES
DEPARTMENT OF THE INTERIOR
BUREAU OF INDIAN AFFAIRS
NAVAJO REGION OFFICE * DIVISION OF TRANSPORTATION

STANDARD GUARDRAIL BARRIER END TREATMENT, ET–PLUS
DESIGN SPEED < 100 kph

Designed by: NRO–DOT	
Drawn by: NRO–DOT	Date: 01/07/10
Revised by:	Date:
File Name: STD–ETPLUS3_081209.dwg	

REGION	STATE	RESERVATION	ROUTE	PROJECT NO.	SHEET	TOTAL SHEETS
NAVAJO	NEW MEXICO	NAVAJO	N46	N46(1)1,2&4	43	58

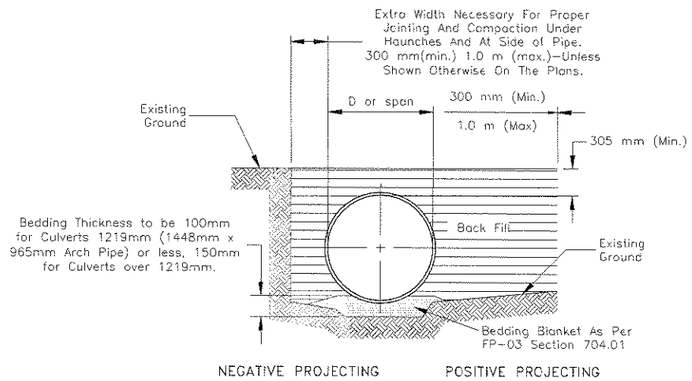

FIGURE A: BEDDING

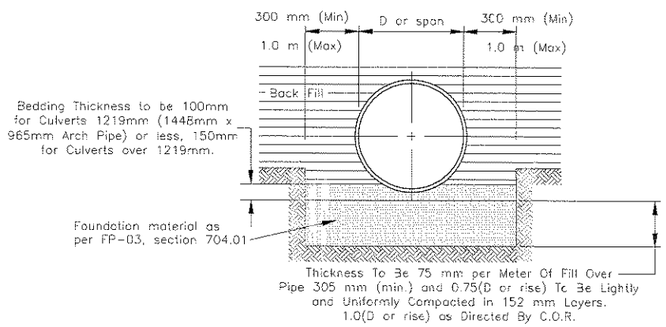

FIGURE B: ROCK BEDDING

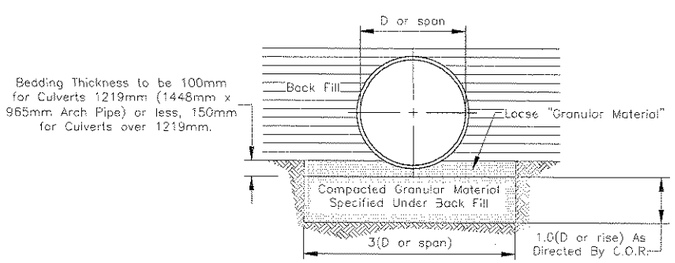

FIGURE C: FOUNDATION STABILIZATION BEDDING

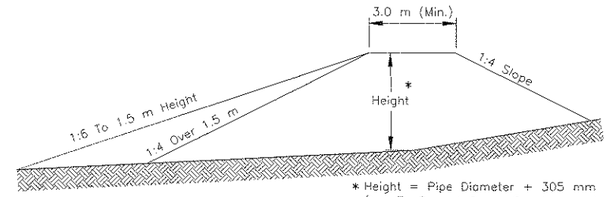

TYPE "B" DIKE

NOTE: When Necessary The Slope May Be Flattened To 1:6 With Rip Rap Protection As Called For On Plans.

EARTHEN DIKE/BERM DETAILS

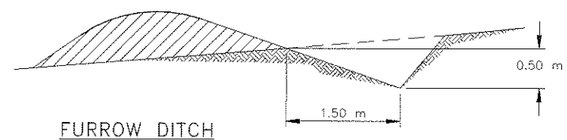

FURROW DITCH

1. To Be Paid For By The Meter.
2. Furrow Ditch Sections As Shown Above Or And Approved Equivalent Shall Be Built As Directed By The AOTR/COR.

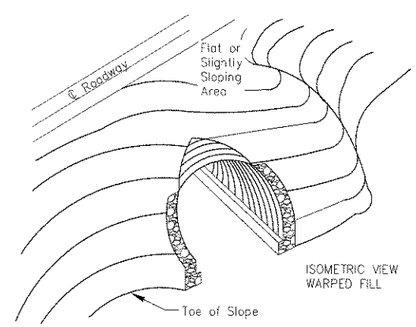

PIPE SKEWS TO THE EMBANKMENT (TYP.)

1. The Contractor Shall Be Required to Build the Warped Embankment Around the Skewed Drainage Pipe(s). This Work Shall Be Incidental to the Earthwork and Installation of Drainage Pipe Items Shown.

GENERAL NOTES

1. Place loose bedding roughly shaped to fit bottom of pipe, then compact under haunches after pipe placement.
2. See sections 204, 209, 602, and 704 of FP-03, including the supplemental specification for additional notes.
3. All drainage structure material shall be unloaded and handled with reasonable care. No structure shall be dragged or allowed to strike any hard surface during placement. Any damaged structure shall be repaired or replaced by the contractor, at no additional cost to the government.
4. All structural plate pipe structures shall be assembled and installed in accordance with the fabricator's recommendation.
5. Backfill material shall be placed 300 mm(min.) 1.0 m(max.) pipe diameter width on the sides and 0.30 m over the pipe. Backfill material beyond the limits shall be regular earthwork embankment material. The backfill material shall be approved by the AOTR/COR prior to it's use and shall be placed in accordance with the plans and specifications.
6. Ponding or jetting pipe backfill shall not be permitted.
7. All pipe excavation, backfilling, de-watering, pumping or cofferdams required to properly install the drainage pipe shall bee considered incidental to completion of the project and no additional payment shall be made.
8. Multiple pipe installation shall be placed 610 mm between end sections unless otherwise directed by the AOTR/COR or as shown on the plans.
9. All pipes shall be protected by a cover of not less than 910 mm of embankment above pipe before any heavy equipment is allowed to pass over the structure(s) during construction.
10. All culverts shall be installed at the original ground line and slope to assure positive drainage up to the R.O.W. limits. In no case shall the pipe be placed below the original ground elevations, unless directed by the Regional Road Manager. This work shall be considered incidental to completion of the project and no additional payment shall be made.
11. All culverts under turnouts and driveways shall be placed at the proposed ditch flowline. The contractor shall be required to field adjust the profile grades over the pipes as directed by AOTR/COR.
12. Type "B" dike shall be used on this project unless otherwise noted on the plans. Dike construction shall meet the requirements of FP-03 section 204, for embankment. Embankment material needed to build earthen dikes shall be considered incidental to Item 20443-2000
13. Ditch blocks at structures to be placed to create a water cushion. Elevation at top of ditch block shall be 152 mm above elevation of top of pipe unless otherwise shown or directed by the AOTR/COR.
14. Ditch Blocks shall be located a distance equal to the largest dimension of the box culvert or pipe from the Face of the drainage structure. In no case shall the distance exceed 4.0 m.

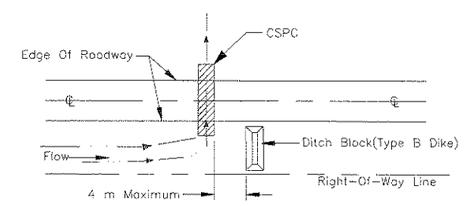

EARTHEN DIKE/BERM INSTALLATION AT STRUCTURE

1. Earthen Dike/Berm At Structures To Be So Placed That They Create A Water Cushion. Elevation Top Of Earthen Dike/Berm Shall Be 305 mm Above Elevation Of Top Of Pipe Unless Otherwise Shown Or Directed by the C.O.R..
2. Earthen Dike/Berm Shall Be Located A Distance Equal To The Largest Dimension Of Box Culvert Or Pipe from the Face of the Drainage Structure. In No Case Shall The Distance Exceed 4.0 m.

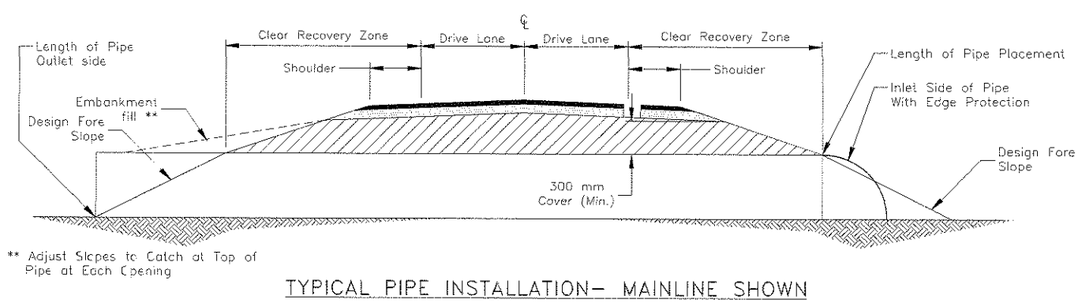

** Adjust Slopes to Catch at Top of Pipe at Each Opening

TYPICAL PIPE INSTALLATION– MAINLINE SHOWN

Turnout/Driveway, Use 2-End Sections

UNITED STATES
DEPARTMENT OF THE INTERIOR
BUREAU OF INDIAN AFFAIRS

NAVAJO REGION OFFICE * DIVISION OF TRANSPORTATION

STANDARD PIPE INSTALLATION AND DITCH DETAILS

Designed by: NRO-DOT	
Drawn by: NRO-DOT	Date: 08/12/09
Revised by:	Date:
File Name: STD-Pipe Install_Ditch Details	

REGION	STATE	RESERVATION	ROUTE	PROJECT NO.	SHEET	TOTAL SHEETS
NAVAJO	NEW MEXICO	NAVAJO	N46	N46(1)1,2&4	44	58

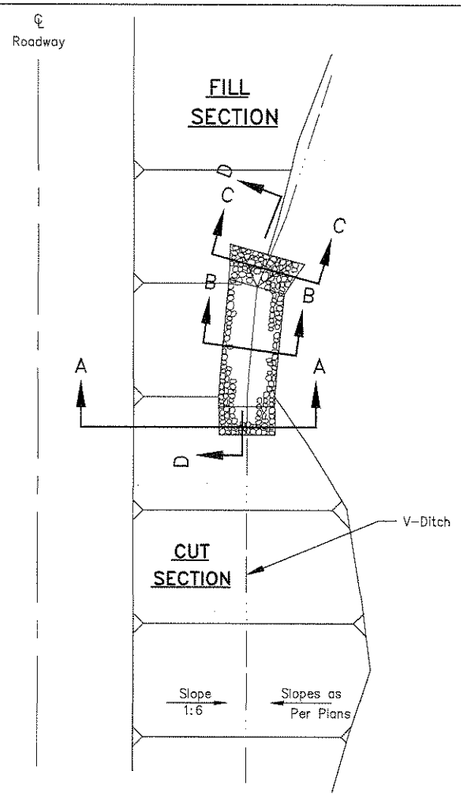

PLAN VIEW
CUT TO FILL TRANSITION
AT V-DITCH

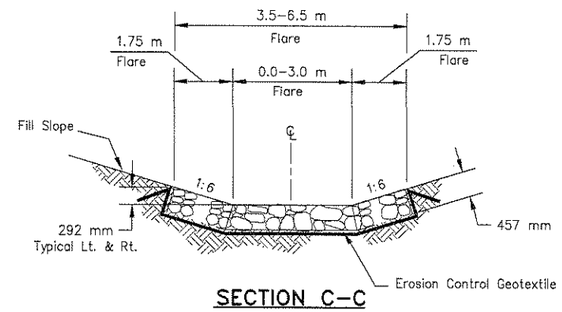

SECTION C-C

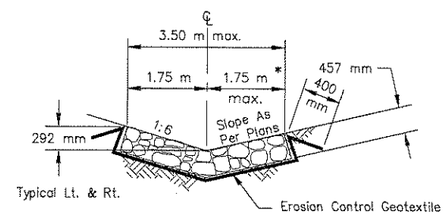

SECTION B-B

*Width=Depth Divided By Backslope(As Per Plans)

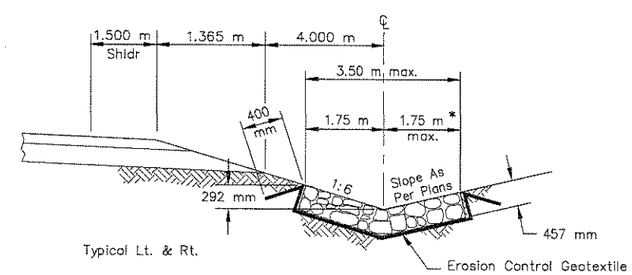

SECTION A-A & RIPRAP LINED DITCH DETAIL

*Width=Depth Divided By Backslope (As Per Plans)

GENERAL NOTES

1. Workmanship and Materials Shall Conform to the Standard Specifications for Construction of Roads and Bridges on Federal Highway Projects (FP-03), Along with All Supplemental Specifications for This Project.
2. The Quantities Shown are Only an Estimate. Actual Quantities Shall Be Determined in the Field. The Project Manager, AOTR/COR, and Contractor Shall Review All Rock Cut Areas After the Construction of Vee and/or Flat Bottom Ditches Have Been "Roughed In". If in the Opinion of the AOTR/COR the Rock Cut Is Stable, the AOTR/COR May Elect to Delete Sections of the Placed Riprap. The Contractor Will Be Required to Make Adjustments to the Placed Riprap as Necessary to Fit Actual Field Conditions. These Field Adjustments Will Be Incidental Obligations of the Contractor.
3. Ditch and Back Slope Reshaping, Cleaning, and Excavation Shall Be Done in Accordance with the Plans and as Determined By the AOTR/COR. All Ditch Excavation, Cleaning, and Reshaping Shall Be Considered Incidental to Completion of the Structure.
4. The Size of All Stone For Placed Riprap Is to Be Class 2, Meeting the Grading Requirements of Table 705-1, and Section 251 of FP-03.
5. Erosion Control Geotextile Shall Be Installed Under All Placed Riprap and Shall Conform to Section 714, Type IV-B, of FP-03, and Shall Be Considered Incidental to Item 25101-2000. Erosion Control Geotextile Shall Be Tucked or Embedded 400 mm Into the Ground Along All Edges As Shown.
6. Riprap Downdrains Shall Be Carried Down Slope to the Intersection of the Fill Slope and Extended Until a 2% or Lower Slope Is Achieved Before Termination.
7. The Finished Surface of All Riprap Shall Be Set 30 mm Below the Ground Surface Except at Riprap Discharge Ends, Which Shall Be Set 30 mm Above the Ground Surface.

ITEM 25101-2000: PLACED RIPRAP, CLASS 2

STATION	LOCATION	Wd1(m)	Wd2(m)	THICKNESS (mm)	ESTIMATED LENGTH (m)	VOLUME (m^3)
1+755 to 1+950	Rt.	3.50	6.50	457	195	316
					TOTAL	316

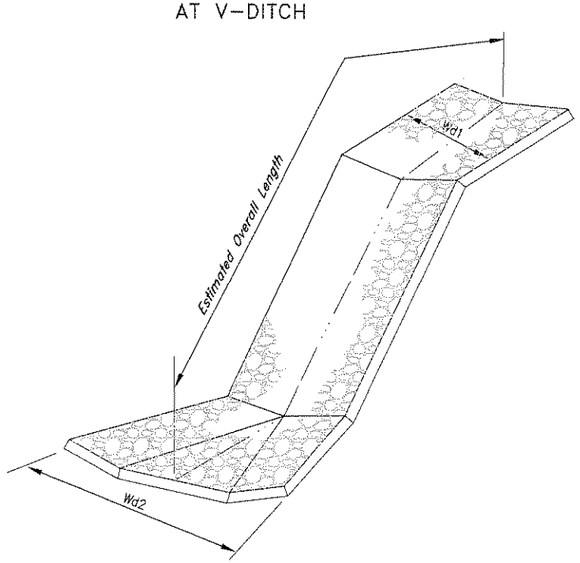

PERSPECTIVE VIEW
PLACED RIPRAP DOWNDRAIN AT V-DITCH

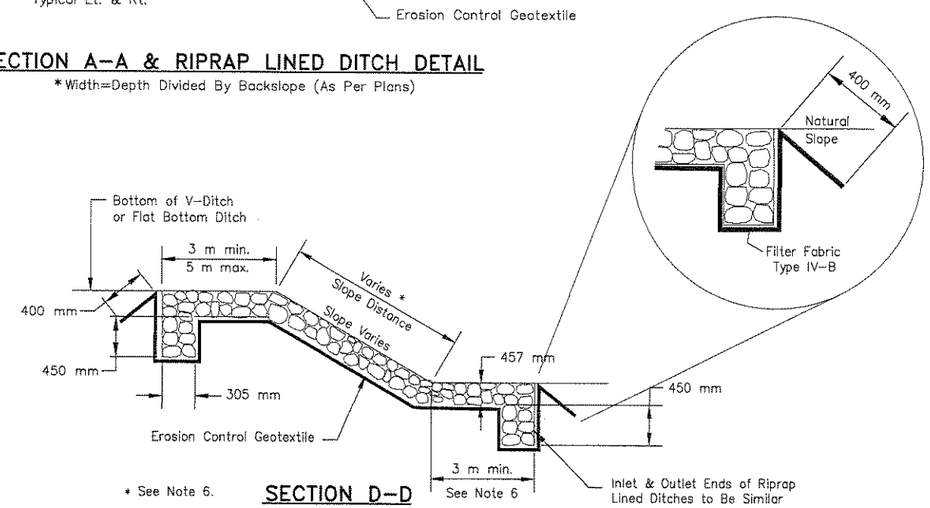

* See Note 6.

SECTION D-D

UNITED STATES
DEPARTMENT OF THE INTERIOR
BUREAU OF INDIAN AFFAIRS
NAVAJO REGION OFFICE * DIVISION OF TRANSPORTATION

RIPRAP LINED DITCH & CUT TO FILL TRANSITION DETAILS

Designed by: NRDOT	
Drawn by: RDL,cdh	Date: 08/12/09
Revised by:	Date:
File Name: STD-Riprap Downdrain	

REGION	STATE	RESERVATION	ROUTE	PROJECT NO.	SHEET	TOTAL SHEETS
NAVAJO	NEW MEXICO	NAVAJO	N46	N46(1)1,2&4	45	58

GENERAL NOTES

1. See Sheet 22 for Wire Enclosed Riprap Notes.

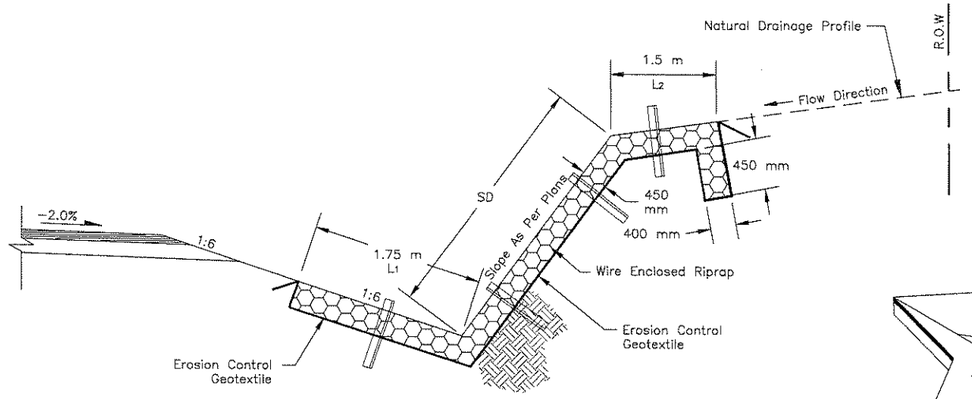

SECTION B-B

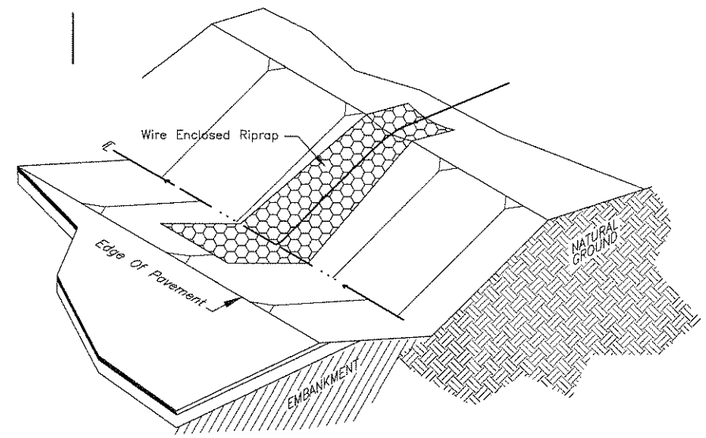

ISOMETRIC VIEW

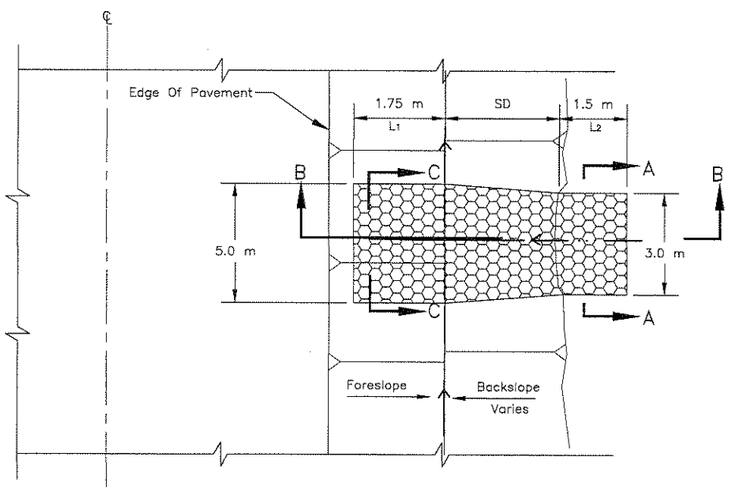

PLAN VIEW

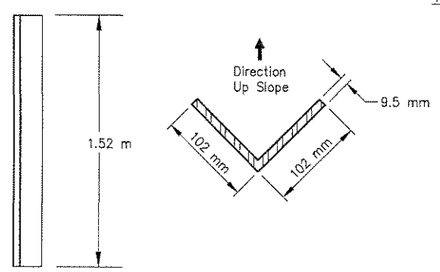

ANGLE IRON ANCHOR DETAIL
N.T.S.

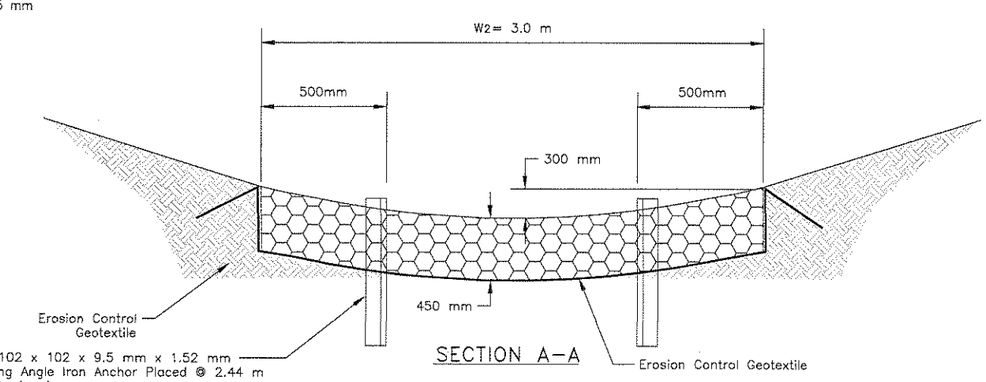

L 102 x 102 x 9.5 mm x 1.52 mm Long Angle Iron Anchor Placed @ 2.44 m O.C. (Max) Longitudinally & Transversly (Typical.). Steel angles shall conform to AASHTO M270M, GRADE 250.

SECTION A-A

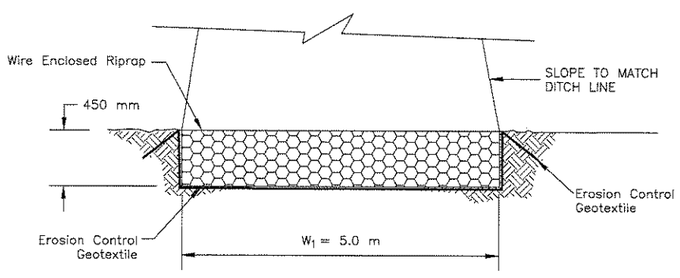

SECTION C-C

ITEM 25112-2000: WIRE ENCLOSED RIPRAP, CLASS 2
BACKSLOPE DOWNDRAIN LOCATIONS

Station	Loc.	SD (m)	L1 (m)	Width: W1 (m)	L2 (m)	Width: W2 (m)	Thickness (mm)	Estimated Riprap Quantity (m^3)
1+452	Lt.	7.2	1.75	5.0	1.5	3.0	450	19
1+500	Lt.	8.0	1.75	5.0	1.5	3.0	450	20
1+512	Lt.	5.2	1.75	5.0	1.5	3.0	450	15
1+525	Lt.	10.4	1.75	5.0	1.5	3.0	450	25
							TOTAL	79

UNITED STATES
DEPARTMENT OF THE INTERIOR
BUREAU OF INDIAN AFFAIRS
NAVAJO REGION OFFICE * DIVISION OF TRANSPORTATION

WIRE ENCLOSED RIPRAP DETAIL FOR BACKSLOPE PROTECTION

Designed by: NRDOT
Drawn by: RDL, cdh Date: 08/12/09
Revised by: Date:
File Name: STD-backslope protection

REGION	STATE	RESERVATION	ROUTE	PROJECT NO.	SHEET	TOTAL SHEETS
NAVAJO	NEW MEXICO	NAVAJO	N46	N46(1)1,2&4	46	58

GENERAL NOTES

1. All Traffic Control Devices Shall Be in Accordance With the MUTCD (Latest Edition and Amendments) and the Supplemental Specifications for This Project.
2. The Traffic Control Details Shown Are Only a Guide. The Contractor Is Solely Responsible For Implementing a Traffic Control Plan (TCP) in Accordance With These Details, Section 635 of FP-03 and the MUTCD, Under Contract Item 63501-0000. The Contractor Shall Coordinate Construction Traffic Control with the Officials of Both Schools Located Within the Project Area to Help Minimize Disruption of the School's Bus Schedules. This Coordination Will Include But Not Be Limited to the Following: Scheduling N46(1) Work Activities and Areas to Avoid As Much As Possible, School Driveway Entrances During Bus Arrival/Departure Times, Scheduling Activities With Longer Traffic Delays Around Bus Schedules, and Instructing Flaggers to Favor Bus Traffic When Possible. Any Additional Traffic Control Devices Called For on the Contractor's TCP Will Not Be Measured For Payment But Shall Be Considered Incidental to the Bid Items For Traffic Control Shown in the Bid Schedule. See the Supplemental Specifications For Additional Requirements.
3. The Contractor's Traffic Control Plan Shall Include Road Construction Ahead Warning Signs on Route N9, and G20-1 and G20-2a Signs on N46, Placed at the Project Limits. These Signs Shall Remain in Place For the Entire Duration of the Project.
4. Flaggers Shall Be Stationed Left & Right As Shown When Equipment Is Crossing or Working Within the Existing Roadway Prism.
5. In Areas of Existing Roadway Widening, the Contractor Shall Ensure That No Pavement Drop-Offs Are Left Exposed During Non-Working Hours. The Contractor Shall Initiate Corrective Means to Achieve a Minimum 1:3 Slope As Shown in the Fillet Detail.
6. At the End of Each Working Day, It Will Be the Contractor's Responsibility to Provide a Driving Surface Free of Obstructions. Access to All Adjoining Properties and BIA/County System Routes Shall Be Maintained at All Times (Day and Night).
7. All Traffic Control Devices (Except at Detour Road Locations and as Noted in Above Note #3) Such as Construction Signs, Drums, Barricades, etc., Shall Be Removed to a Location at Least Nine (9) Meters From the Edge of the Shoulder When Construction Is Not in Progress.
8. During Construction Operations, Traffic Shall Be Moved Through the Work Zone Using Pilot Cars (As Required). Applicable Signs and Other Items (Two-Way Radio Contact) Related to the Use of the Pilot Cars Shall Be Considered Incidental Obligations of the Contractor.
9. The Contractor Has the Option to Either Use Drums or Vertical Panels, But Shall Not Use a Combination of Both. No Traffic Cones Are Allowed.
10. The Contractor Has the Option to Utilize Detour Roads in Accordance With the MUTCD in Conjunction With or in Lieu of Using the "Traffic Thru Construction Zones" Details Shown on this Plan and in Accordance With Section 107 and 204. The Cost of Any Detour Roads (Including All Detour Related Earthwork and Maintenance) Shall Be Considered Incidental to the Temporary Traffic Control Bid Items. The Contractor Is Responsible For All Necessary Permits and Clearances For Any Detour Roads.
11. During Construction of the New Bridge, Roadway Traffic Will Utilize the Existing Wash Crossing. See Detour Plan, Sheet 47, For Details.
12. It is the Responsibility of the Contractor to Maintain the Existing Roadway in Driveable Condition During Construction. This Work is Considered Incidental to Item 63501-0000.
13. For Additional Details See Detour Plan, Sheet 47.
14. At Locations Where New Road Construction Crosses Existing Roadway and at Tie-Ins with Existing Roads at the End of the New Construction, Special Traffic Control Procedures Shall be Included in the Contractor's TCP. These Included But are not Necessarily Limited to the Following: Type III Barricades with "ROAD CLOSED"; DETOUR; SIGNS; FLAG MEN; and/or Drums.
15. The Traffic Control on this Project shall be Coordinated with the Project Construction Schedule. The Contractor's TCP Shall Reflect this Coordination. Maintain 24 hrs. Access to Adjoining Properties where Appropriate.
16. The Contractor Shall Coordinate Construction Activities with the Local School to Ensure that Daily Scheduled Bus Arrival and Departure Times are Maintained to the Fullest Extent Possible. School Buses Shall not be Delayed over 5 Minutes. The Contractor's TCP Shall Reflect this Coordination.

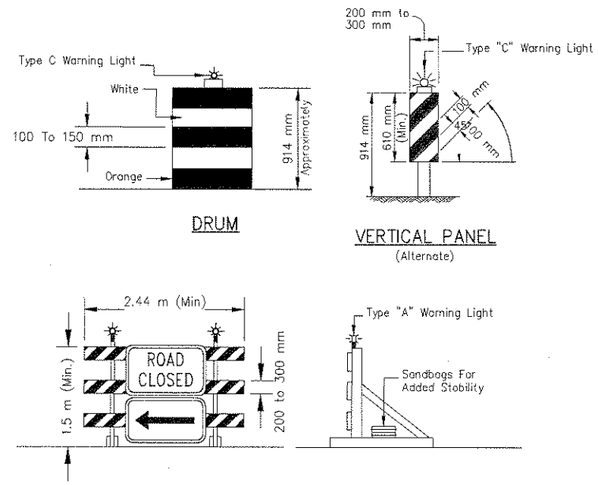

TEMPORARY TRAFFIC CONTROL DEVICES

DESIGNATION	DETAIL	MINIMUM SIZE (mm)	DESIGNATION	DETAIL	MINIMUM SIZE (mm)
W20-1	ROAD WORK 1500 FT	1219 x 1219	W1-4R W1-4L		762 x 762 762 x 762
W20-1	ROAD WORK 1000 FT	1219 x 1219	W16-2a	500 FEET	610 x 457
W20-4	ONE LANE ROAD 1000 FT	1219 x 1219	G20-2a	END ROAD WORK	914 x 457
W20-7a		914 x 914	Type III Barricade		As Shown
W3-4	BE PREPARED TO STOP	914 x 914	R11-2	ROAD CLOSED	1219 x 762
W13-1	25 M.P.H.	610 x 762	M4-10(L) M4-10(R)	DETOUR	1219 x 457
G20-1	ROAD WORK NEXT X MILES	914 x 457	W1-6(L) W1-6(R)		1219 x 610
Type A Warning Lights		N/A	Drums or Vertical Panels		As Shown
Type C Warning Lights		N/A			

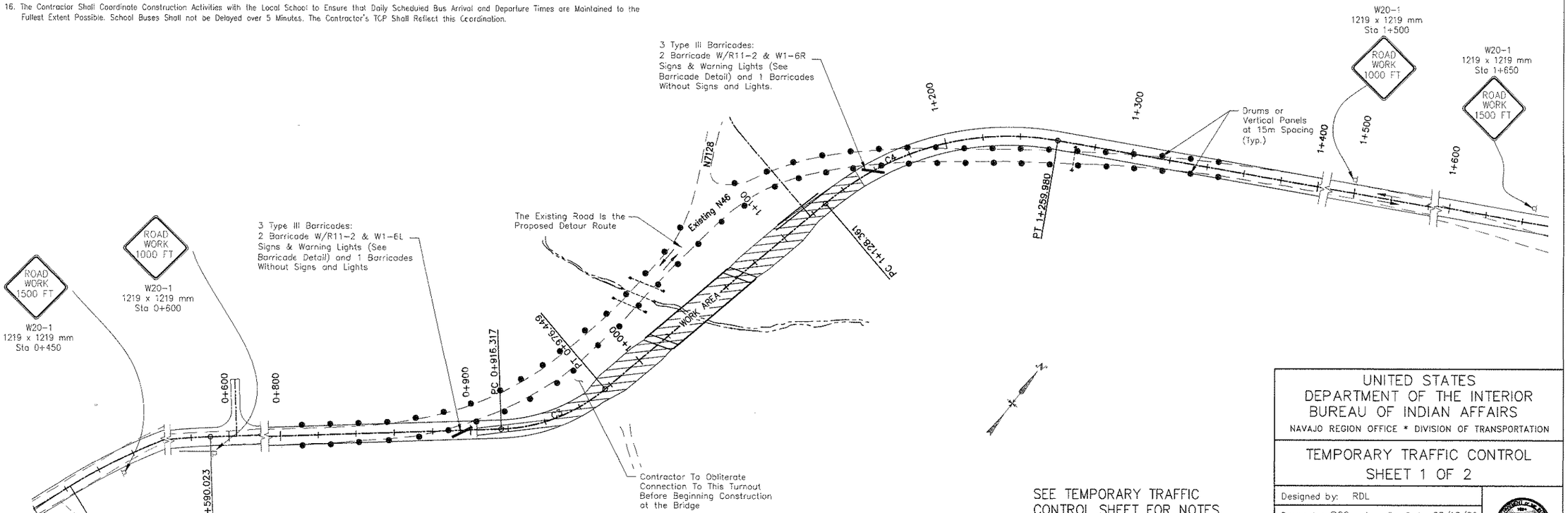

DETOUR FOR CONSTRUCTION OF NEW BRIDGE

Scale: NTS

SEE TEMPORARY TRAFFIC CONTROL SHEET FOR NOTES.

UNITED STATES
DEPARTMENT OF THE INTERIOR
BUREAU OF INDIAN AFFAIRS
NAVAJO REGION OFFICE * DIVISION OF TRANSPORTATION

TEMPORARY TRAFFIC CONTROL
SHEET 1 OF 2

Designed by: RDL
Drawn by: BGC, rsh, cdh Date: 08/12/09
Revised by: Date:
File Name: N46_Trafcntrol_Detour_Plan

REGION	STATE	RESERVATION	ROUTE	PROJECT NO.	SHEET	TOTAL SHEETS
NAVAJO	NEW MEXICO	NAVAJO	N46/N9	N46(1)1,2&4 N9(13)2&4	47	58

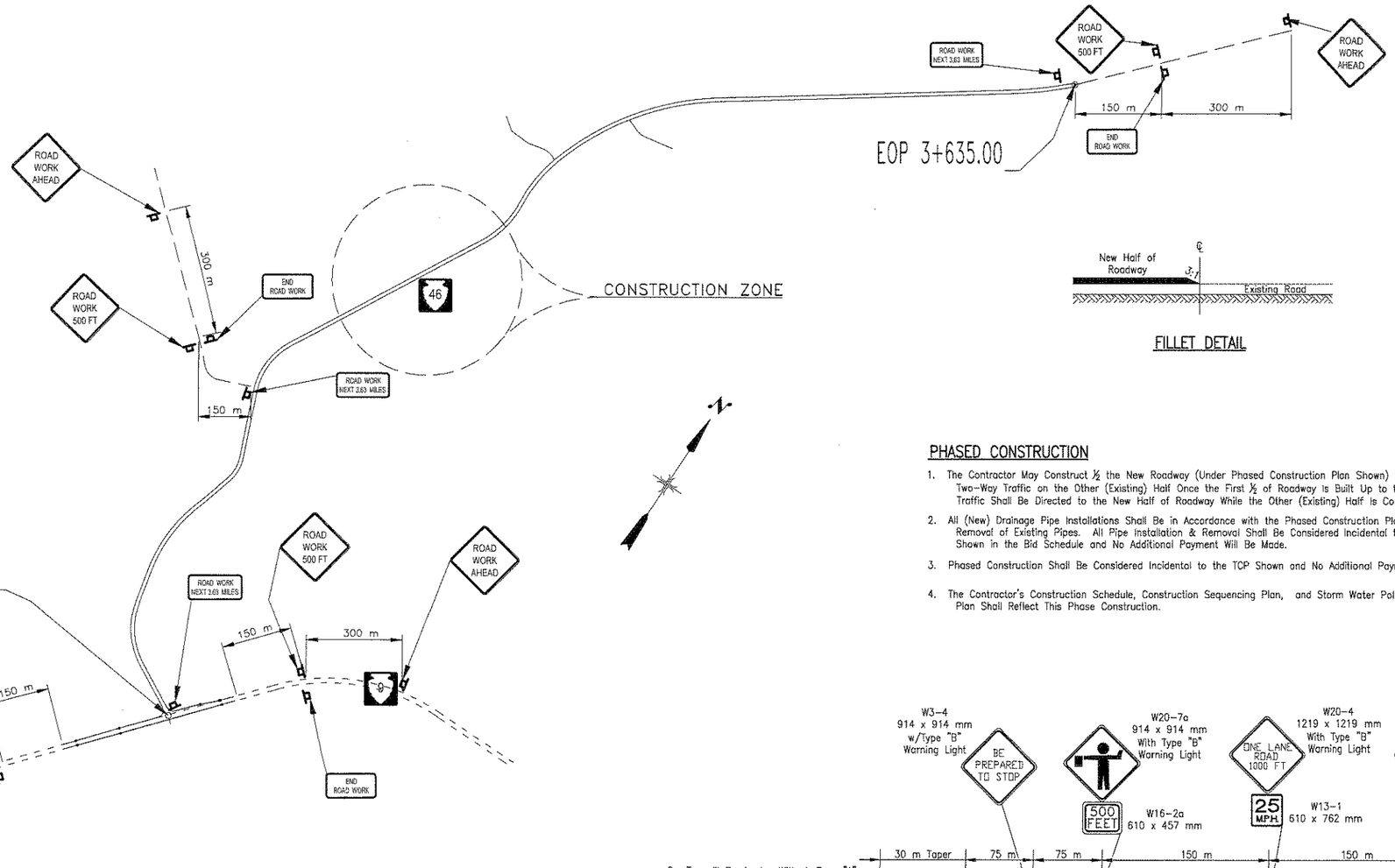

FILLET DETAIL

PHASED CONSTRUCTION

1. The Contractor May Construct ½ the New Roadway (Under Phased Construction Plan Shown) While Detouring Two-Way Traffic on the Other (Existing) Half Once the First ½ of Roadway Is Built Up to the New Grades, Then Traffic Shall Be Directed to the New Half of Roadway While the Other (Existing) Half Is Constructed.
2. All (New) Drainage Pipe Installations Shall Be in Accordance with the Phased Construction Plan Above, as Well as Removal of Existing Pipes. All Pipe Installation & Removal Shall Be Considered Incidental to the Pipe Items Shown in the Bid Schedule and No Additional Payment Will Be Made.
3. Phased Construction Shall Be Considered Incidental to the TCP Shown and No Additional Payment Shall Be Made.
4. The Contractor's Construction Schedule, Construction Sequencing Plan, and Storm Water Pollution Prevention Plan Shall Reflect This Phase Construction.

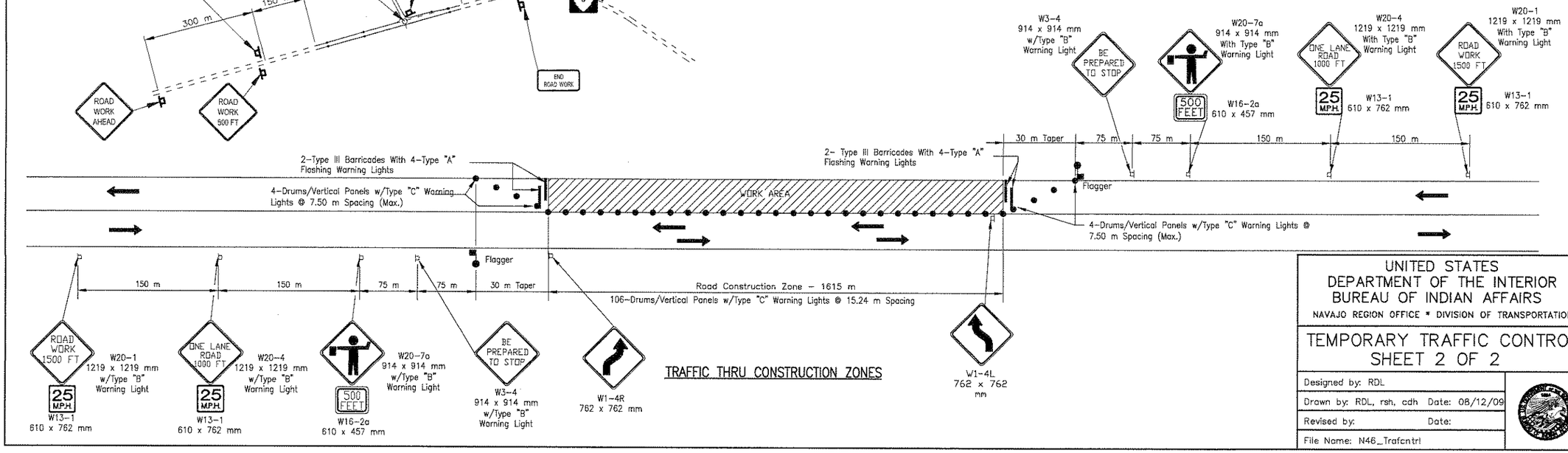

TRAFFIC THRU CONSTRUCTION ZONES

UNITED STATES
DEPARTMENT OF THE INTERIOR
BUREAU OF INDIAN AFFAIRS
NAVAJO REGION OFFICE * DIVISION OF TRANSPORTATION

TEMPORARY TRAFFIC CONTROL
SHEET 2 OF 2

Designed by: RDL
Drawn by: RDL, rsh, cdh Date: 08/12/09
Revised by: Date:
File Name: N46_Trafcntrl

REGION	STATE	RESERVATION	ROUTE	PROJECT NO.	SHEET	TOTAL SHEETS
NAVAJO	NEW MEXICO	NAVAJO	N46	N46(1)1,2&4	48	58

CHART TO DETERMINE SINGLE POST SIZE

POST WEIGHT	K FACTOR (B x A)	B DIMENSION (Meter) 1.52	1.83	2.13	2.44	2.74	3.05	3.35	3.66	3.96	4.27	4.57	4.87	
2.976 kg/m	DOES NOT APPLY	0.36	0.36	0.36	0.36	0.36	0.36	0.36	0.34	0.32	0.30	0.27	0.26	A(m²) SIGN AREA
3.348 kg/m		0.47	0.47	0.47	0.47	0.47	0.47	0.43	0.39	0.36	0.33	0.32	0.30	
4.092 kg/m		0.62	0.62	0.62	0.62	0.62	0.62	0.56	0.51	0.47	0.44	0.41	0.38	
4.464 kg/m		0.68	0.68	0.68	0.68	0.68	0.68	0.68	0.62	0.58	0.52	0.47	0.46	
5.952 kg/m		0.87	0.87	0.87	0.87	0.87	0.87	0.87	0.87	0.80	0.74	0.70	0.65	

CHART TO DETERMINE DOUBLE POST SIZE

POST WEIGHT	K FACTOR (B x A)	B DIMENSION (Meter) 1.52	1.83	2.13	2.44	2.74	3.05	3.35	3.66	3.96	4.27	4.57	4.87	
2.976 kg/m	2.74	1.80	1.50	1.28	1.12	1.00	0.90	0.82	0.75	0.70	0.64	0.60	0.57	A(m²) SIGN AREA
3.348 kg/m	3.08	2.03	1.69	1.45	1.27	1.13	1.01	0.92	0.85	0.78	0.72	0.68	0.63	
4.092 kg/m	4.03	2.64	2.20	1.89	1.65	1.47	1.32	1.20	1.10	1.01	0.94	0.88	0.83	
4.464 kg/m	4.91	3.23	2.69	2.31	2.03	1.79	1.62	1.47	1.35	1.24	1.15	1.08	1.01	
5.952 kg/m	6.83	4.48	3.73	3.20	2.80	2.49	2.24	2.03	1.87	1.72	1.60	1.50	1.40	

CHART TO DETERMINE THREE POST SIZE

POST WEIGHT	K FACTOR (B x A)	B DIMENSION (Meter) 1.52	1.83	2.13	2.44	2.74	3.05	3.35	3.66	3.96	4.27	4.57	4.87	
2.976 kg/m	4.12	2.69	2.25	1.92	1.68	1.50	1.35	1.23	1.12	1.04	0.97	0.90	0.85	A(m²) SIGN AREA
3.348 kg/m	4.65	3.05	2.54	2.17	1.90	1.69	1.52	1.38	1.27	1.17	1.09	1.01	0.96	
4.092 kg/m	6.02	3.96	3.30	2.82	2.47	2.19	1.98	1.79	1.64	1.52	1.41	1.32	1.24	
4.464 kg/m	7.40	4.85	4.04	3.47	3.03	2.69	2.42	2.20	2.02	1.86	1.73	1.62	1.51	
5.952 kg/m	10.20	6.71	5.58	4.78	4.19	3.73	3.35	3.05	2.79	2.57	2.40	2.23	2.09	

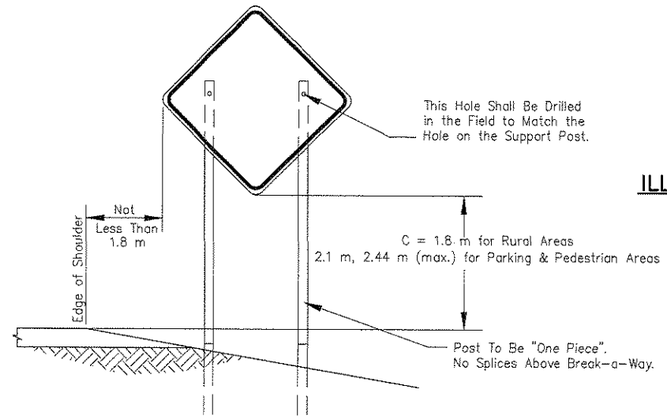

TYPICAL 2-POST ROADSIDE SIGN LOCATION

GENERAL NOTES:

1. The Contractor Shall Be Required to Adjust the Length of Sign Support Posts. This Work Shall Be Included in the Unit Price For the Appropriate Bid Items Shown in the Bid Schedule.

2. Sign Dimensions Equal to or in Excess of 762 mm X 762 mm Size Shall Be Installed With a Minimum of Two (2) Steel Posts.

ILLUSTRATION OF POSTS/WEIGHT DETERMINATION:

REQUIRED: Determine Post Requirements For 1.52 m wide x 1.22 m High Sign. Located On a Rural Highway.

GIVEN: W=1.52 m
D=1.22 m
C=1.5 m for Rural Areas

SOLUTION:
1. D/2 = 0.61 m; K factor = 3.90
2. B=C+D/2=1.5 + 0.61; B=2.11 m
3. A=WxD=1.52 x 1.22 = 1.85 sq. m.
4. Begin with Single Post Chart for Column of B=2.13 m, and Continue Down Until Area of Sign Equals or Exceeds 1.85 sq. m. The Area Exceeds the Single Post Chart, So Go to the Double Post Table.

Select Two (2) Posts of 4.09 kg/m Yields a Factor of 4.03 Which is Optimum.

EXAMPLE:

POST	B=2.13
4.09 kg/m	1.89 ←
4.46 kg/m	2.31
5.95 kg/m	3.20

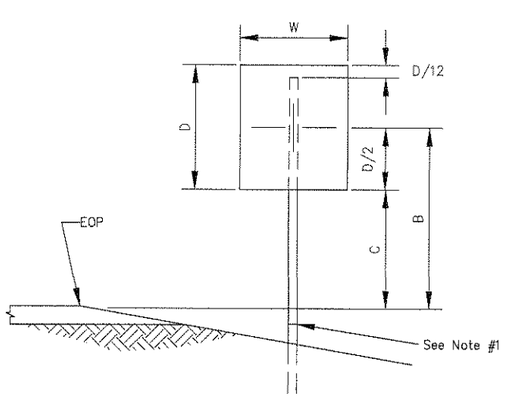

SINGLE POST SIZE (Typ.)

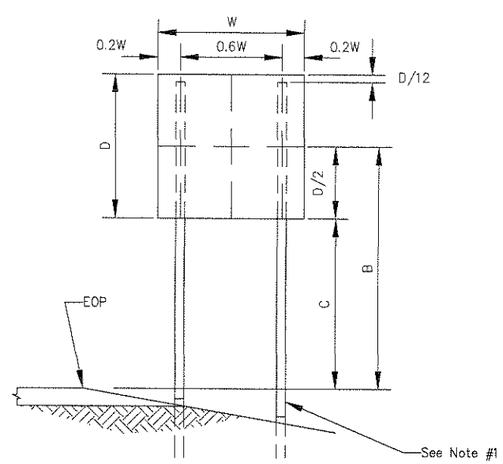

DOUBLE POST SIZE (Typ.)

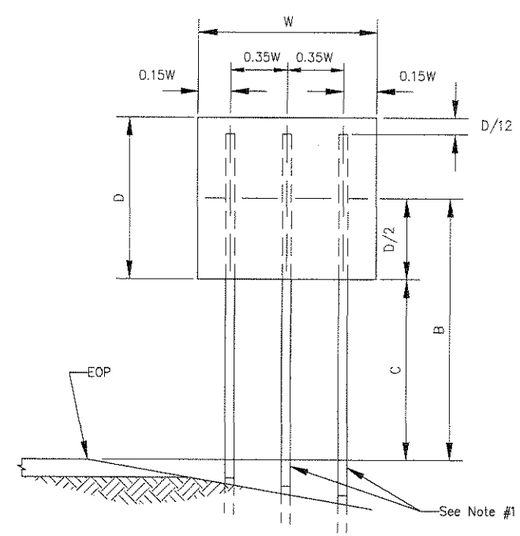

THREE POST SIZE (Typ.)

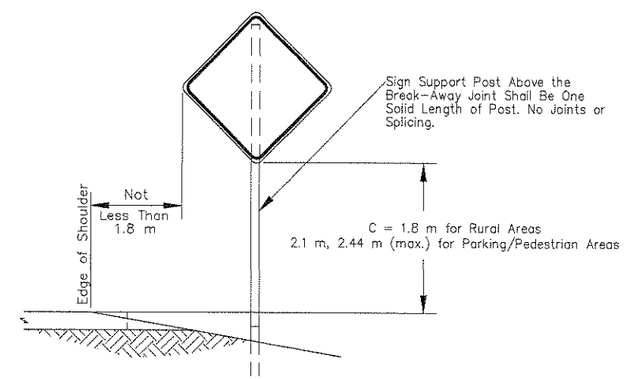

TYPICAL 1-POST ROADSIDE SIGN LOCATION

UNITED STATES
DEPARTMENT OF THE INTERIOR
BUREAU OF INDIAN AFFAIRS
NAVAJO REGION OFFICE * DIVISION OF TRANSPORTATION

PERMANENT SIGNING DETAILS

Designed by: NRO-DOT	
Drawn by: NRO-DOT	Date: 08/12/09
Revised by:	Date:
File Name: STD-Sign1	

REGION	STATE	RESERVATION	ROUTE	PROJECT NO.	SHEET	TOTAL SHEETS
NAVAJO	NEW MEXICO	NAVAJO	N46	N46(1)1,2&4	49	58

RIB-BAK U-CHANNEL SIGN SUPPORTS

WEIGHT	DIMENSIONS (mm)				AREA	X-X AXIS		Y-Y AXIS	
*kg/m	A	B	C	D	mm^2	$I(mm^4)$	$S(mm^3)$	$I(mm^4)$	$S(mm^3)$
2.97	38.30	76.91	33.12	16.10	54.83	81.99	42.27	195.62	50.96
3.71	38.68	79.35	33.15	18.33	51.28	103.22	51.29	249.73	62.92
4.08	39.47	78.77	32.72	16.94	55.74	112.38	54.89	278.04	70.62
4.45	48.34	85.85	33.73	18.42	62.45	188.65	73.24	374.60	87.34
5.94	50.27	85.78	34.04	19.10	80.77	260.14	97.99	476.58	111.10

* ±5%

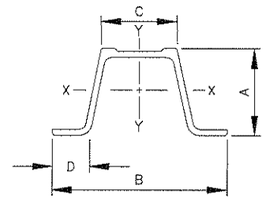

RIB-BAK U-CHANNEL

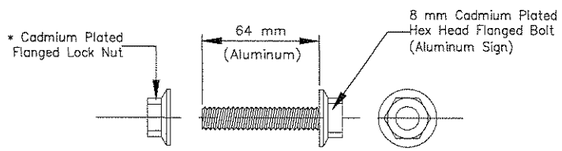

BOLTS AND LOCK NUT – SIGN ATTACHMENT

* Flanged Lock Nut Required For Carriage And Hex

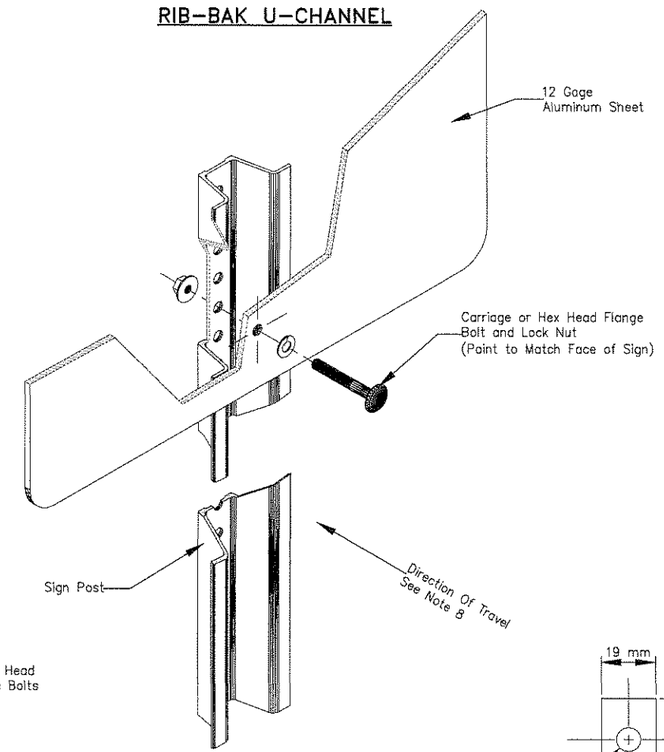

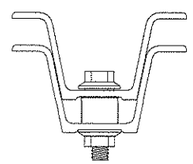

LAP SPLICE – TOP VIEW

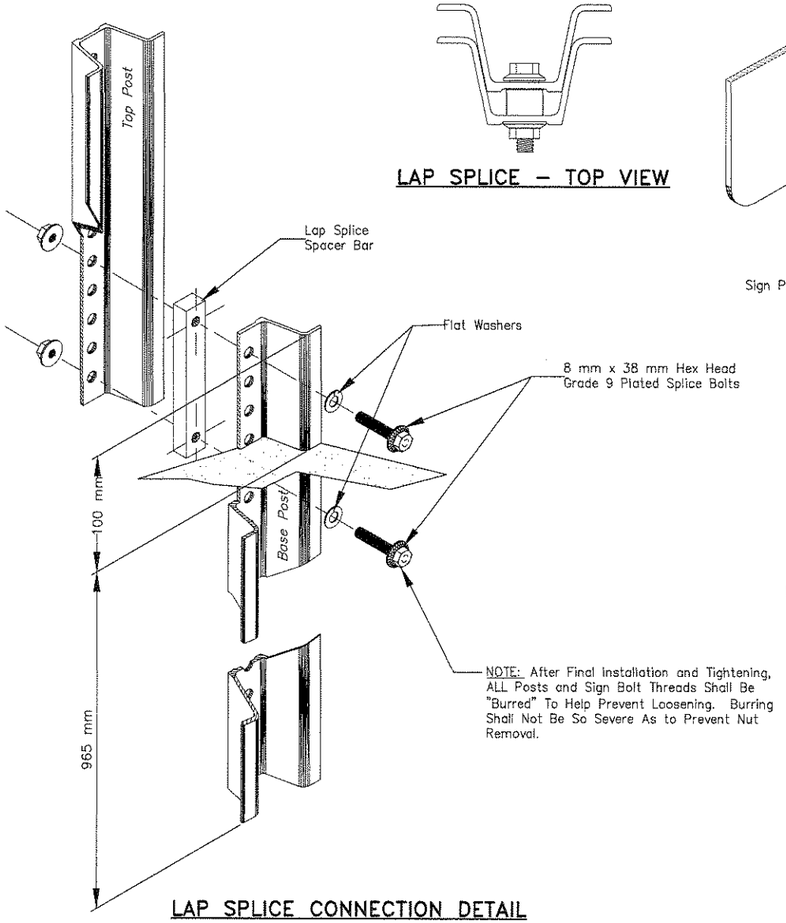

NOTE: After Final Installation and Tightening, ALL Posts and Sign Bolt Threads Shall Be "Burred" To Help Prevent Loosening. Burring Shall Not Be So Severe As to Prevent Nut Removal.

LAP SPLICE CONNECTION DETAIL

NOTE: The Gold Anodized 13 mm Thick Spacer Bar Is to Be Used With 4.45 kg/m and 5.94 kg/m Posts Only.

The Silver Anodized 10 mm Thick Spacer Bar Is to Be Used With 2.97 kg/m, 3.71 kg/m, and 4.08 kg/m Posts Only.

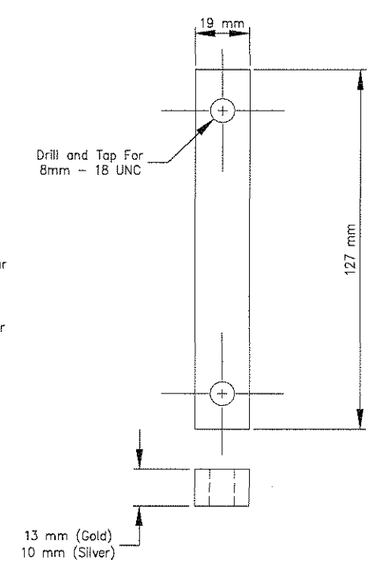

LAP SPLICE SPACER BAR

General Notes

1. Base Post and Sign Post Shall Be Rib-Bak U-Channel Fabricated From Hot Rolled Carbon Steel Bars Conforming to the Requirements of ASTM A499. Yield Point of the Steel Shall Be 550 MPa (Minimum). Tensile Shall Be 689.47 MPa (Minimumum).
2. Posts Shall Be a Uniform, Modified, Flanged Channel Section of the Rib-Bak Design. Weight of the Posts Shall Be as Specified By the User, ±5% Before Punching. The Posts Shall Be Punched With Continuous 9 mm Holes on 25 mm Centers For the Entire Length of the Post.
3. The Posts Shall Be Machine Straightened to Have a Smooth, Uniform Finish Free From Defects Affecting Their Strength, Durability, or Appearance. All Holes and Rough Edges Shall Be Free From Burrs. The Permissible Tolerance for Straightness Shall Be Within 6.35 mm in 1.52 Meter.
4. Posts Shall Be Galvanized After Fabrication in Accordance With the Requirements of ASTM A123. Bolts, Nuts, Washers and Spacer Shall Be Cadmium Plated in Accordance With the Requirements of ASTM A165 or Zinc Plated in Accordance With the Requirements of ASTM B633.
5. Splice Hardware Shall Consist of Two Fully Threaded, 8 mm X 38 mm Grade 9 Plated, Hex Head Bolts, With Flat Washers, and Self Locking Hex Nuts Per Post. in Addition, One Shall Be Galvanized After Fabrication in Accordance With the Requirements of ASTM A123. Bolts, Nuts, Washers and Spacers Shall Be Cadmium Plated in Accordance With ASTM B766. One 19 mm X 127 mm Plated Spacer Bar Shall Be Used, Per Post, To Stiffen the Splice Connection. Each Spacer Bar Shall Be Drilled and Tapped With 8 mm-18 UNC Threads. The Spacer Shall Be Fabricated From Hot Rolled Carbon Steel Bars Conforming to ASTM A36 or M1020. Bolts Shall Be Red in Color With the Head Marking "M180".
6. Bolts and Lock Nut Hardware For Sign Attachment Shall Be Hex Head Flange Type. Size Shall Be 8 mm-18 UNC. Bolts and Nuts Shall Be Cadmium Plated to ASTM B766 Specification.
7. An Alternate Breakaway and Support Post Assembly May Be Submitted to the NRDOT Division Manager for Review and Approval.
8. Supplemental Signs on the Opposite Side of Road Shall Have the Post Reversed So That Rib-Bak Is Facing Away From the Opposing Traffic.
9. The Post Shall Be Coated With a Baked on Green Alkyd Resin, Paint, Painted With a Polyester Powder or Galvanized Per Note 4 Above.

INSTALLATION PROCEDURE

STEP 1:
Drive Base Post to Within Approximately 300 mm Above Ground Level. Place One Bolt and Cut Washer in Fifth Hole From the Top and Securely Tighten Threaded Spacer Onto Bolt.

STEP 2:
Drive Base Post to 100 mm Above Ground Level. Place Remaining Bolt and Cut Washer in First Hole From the End and Securely Tighten Threaded Spacer Onto Bolt.

STEP 3:
Dig Out Approximately 50 mm From Around Back of Ground Post to Allow Room For Top Post to Be Attached.

STEP 4:
Nest Top Post Onto Protruding Base Post Bolts, Through the First and Fifth Holes of the Top Post.

STEP 5:
Place a Self-Locking Flange Nut on Each Bolt. Tighten Nuts and Tamp Earth Around Post Firmly.

UNITED STATES
DEPARTMENT OF THE INTERIOR
BUREAU OF INDIAN AFFAIRS
NAVAJO REGION OFFICE * DIVISION OF TRANSPORTATION

SIGN POST AND HARDWARE DETAILS

Designed by: NRDOT	
Drawn by:	Date: 08/12/09
Revised by:	Date:
File Name: STD-Sign2	

REGION	STATE	RESERVATION	ROUTE	PROJECT NO.	SHEET	TOTAL SHEETS
NAVAJO	NEW MEXICO	NAVAJO	N46	N46(1)1,2&4	50	58

GLASS FIBER TYPE DELINEATOR AND OBJECT MARKER

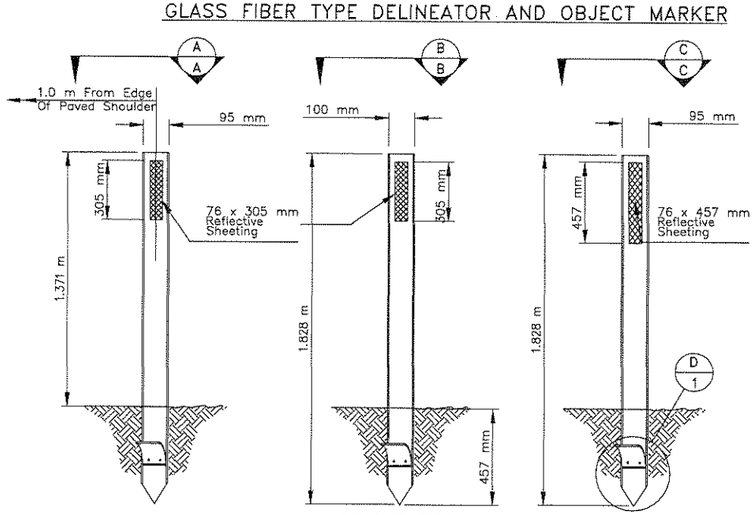

DELINEATOR Type 1a

DELINEATOR Type 1b

OBJECT MARKER Type II

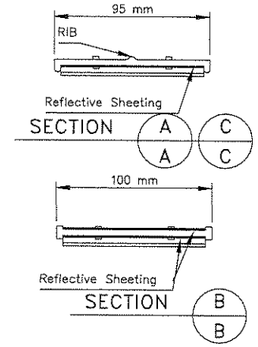

TYPE	POST COLOR	HIGH INTENSITY REFLECTIVE SHEETING
1a	WHITE	WHITE, ONE SIDE
1b	WHITE	WHITE, BOTH SIDES
2	YELLOW	AMBER, ONE SIDE

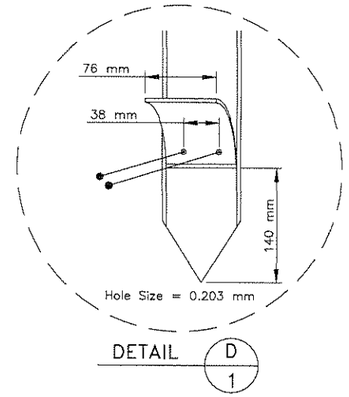

GENERAL NOTES

1. Survey Monument and Reference Markers Shall Be Placed As Shown on the Plans or As Directed By the AOTR/COR. The Cost of Supplying All Materials and Installation of Right-of-Way Monuments & Markers Shall Be Included in the Unit Prices Bid Under Items 62101-0000 & 62102-0000.
2. Brass Caps For the Survey Monuments Shall Be Supplied By the Contractor Conforming to ASTM B584 and Shall Be Considered Incidental to Item 62101-0000.
3. All Concrete Shall Be Class A(AE) and Shall Conform to Section 601 of FP-03. Furnishing and Placing of Concrete and Rebar Shall Be Considered Incidental to Items 62101-0000 & 62102-0000.
4. Roadway Stationing & Elevations Shall Be Stamped on All Brass Caps By the Contractor After Installation.
5. The Contractor Shall Be Required to Paint the Reference Markers Per Section 708 and Subsection 708.04 of FP-03:
   A.) The Primer Coat Shall Conform to Subsection 708.04(A) or (B) of FP-03.
   B.) The White Finish Coat of Paint Shall Conform to Subsections 708.04 (C),(D), or (E) of FP-03.
   C.) All Letters, Numerals, Symbols, Etc. Shall Be Painted on the Reference Markers Using the Dimensions Shown Using Lamp Black Paint Conforming to ASTM D 209. The Required Information to Be Placed on the Reference Markers Shall Be Furnished to the Contractor By the AOTR/COR.
6. The Contractor Has the Option to Use An Approved State Paint Specification in Lieu of That Stated in Note 5 Above. The Contractor Shall Submit the Paint Specifications (in Writing) and Request For Use on the Project at Least 14 Days in Advance of the Paint Use, for Review and Approval. The Contractor Shall Not Be Allowed to Use Any Paint Until the Proper Approval Has Been Given by the Contracting Officer. Any Painting Performed by the Contractor Without the Proper Approval Shall Be Cause For the Work to Be Rejected.
7. The Contractor Shall Use Glass Fiber Highway Delineators only. The Cost of Supplying Materials and Installation of U-Channel Shall Be Included in the Unit Price Bid Under Items 63308-2000, 63308-3000 & 63309-0020.
8. Set R.O.W. Monuments at Stations and Offsets to Match the Right-Of-Way Plat. These Locations May Vary From the Stations and Offsets Shown on the Construction Plan and Profile Sheets.
9. If rock is encountered when installing the right-of-way monument and reference maker, drill a 152mm for R/W monument and 305mmø for reference marker hole in the rock to the depth required to install the monument and marker to full depth. All hole drilling into rock material, shall be considered incidental to the completion of the work and no additional payment shall be made therefor. (Bid Item 62101 & 62102).

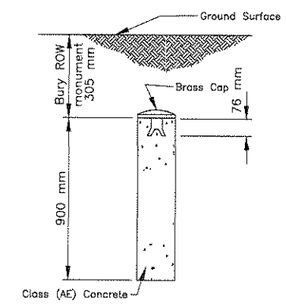

Sta. 1+140.000 – 90 m Lt.(only)

BURIED R.O.W. MONUMENT

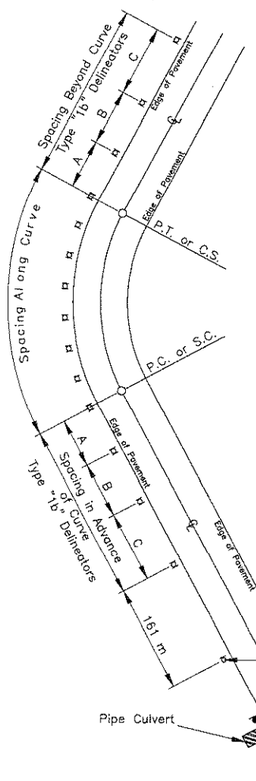

RADIUS OF CURVE (m)	APPROXIMATE SPACING (S) ON CURVE (m)	SPACING ON ADVANCE OF OR BEYOND A CURVE (m)		
		A (2S)	B (3S)	C (6S)
15	6	12	18	36
35	8	16	24	48
55	11	22	33	66
75	13	26	39	78
95	15	30	45	90
125	18	36	54	108
155	20	40	60	120
185	22	44	66	132
215	24	48	72	144
245	26	52	78	156
275	27	54	81	162
305	30	58	87	174
400	33	67	100	200
500	37	75	112	225
600	41	82	123	247
700	44	89	133	267
800	48	95	143	286
900	51	101	152	303
1000	53	107	160	320
1500	66	131	197	393
2000	76	151	227	454
2500	85	169	254	508
3000	93	186	279	557
3500	100	201	301	602
4000	107	215	322	644
4500	114	228	342	683
5000	120	240	360	720
5500	126	252	378	755
6000	132	263	395	789

$S = 1.7 \times \sqrt{(R-15)}$

Spacing for specific radii may be interpolated from table.
The spacing on curves should not exceed 90 meters.
Shaded areas denotes to use 90 meter spacings.
Delineators should be spaced 60 to 160 meters apart on mainline tangent sections.

NOTE: When uniform spacing is interrupted by such features as culverts, signs, driveways, intersections, delineators which would ordinarily be located within the features may be relocated in either direction for a distance not exceeding one quarter of the uniform spacing. Delineators still falling within such features may be eliminated.

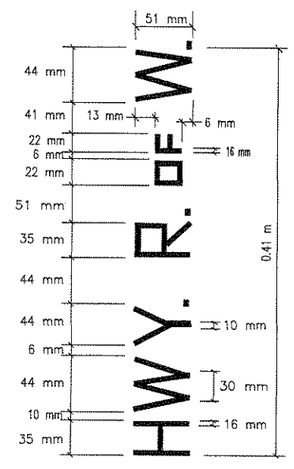

TYPICAL LETTERING DETAIL

RIGHT-OF-WAY MONUMENT SYMBOL

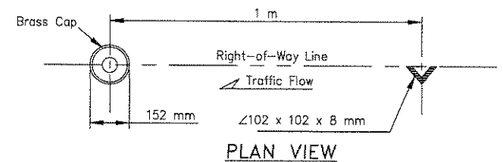

PLAN VIEW

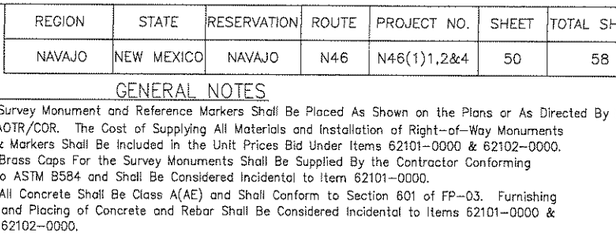

SECTION B-B BOTTOM VIEW TOP VIEW

STANDARD BRASS CAP DETAIL

(OR APPROVED EQUAL)

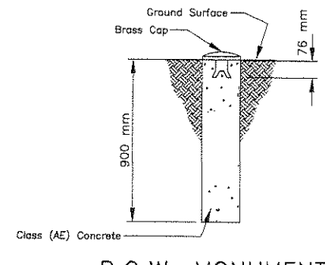

R.O.W. MONUMENT

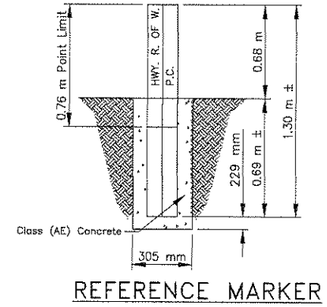

REFERENCE MARKER

UNITED STATES
DEPARTMENT OF THE INTERIOR
BUREAU OF INDIAN AFFAIRS
NAVAJO REGION OFFICE * DIVISION OF TRANSPORTATION

DELINEATOR AND R.O.W. MARKER DETAILS

Designed by: NRO-DOT	
Drawn by: NRO-DOT	Date: 08/12/09
Revised by:	Date:
File Name: STD-delinrowdet	

REGION	STATE	RESERVATION	ROUTE	PROJECT NO.	SHEET	TOTAL SHEETS
NAVAJO	NEW_MEXICO	NAVAJO	N46	N46(1)1,2&4	51	58

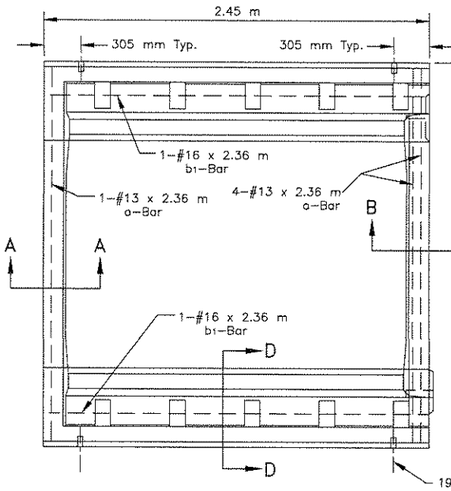

PLAN – END UNIT

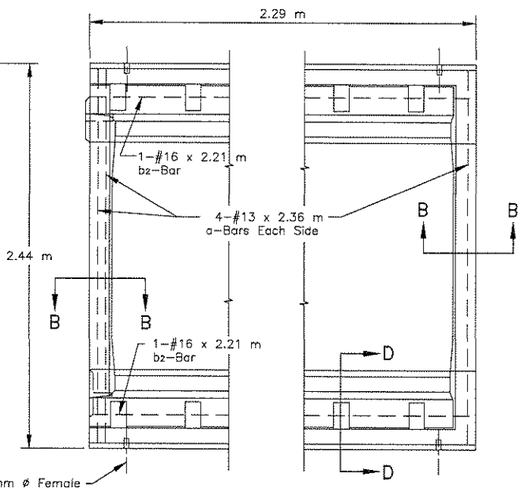

PLAN – INTERMEDIATE UNIT

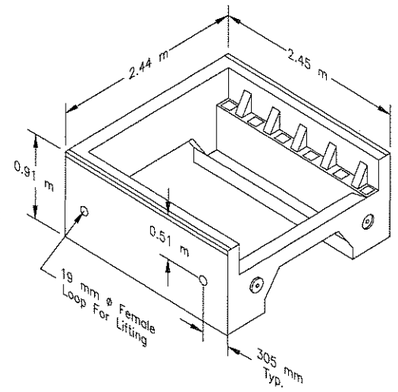

ISOMETRIC VIEW – END UNIT

REINFORCING STEEL SCHEDULE

STRAIGHT BARS				BENT BARS			
MARK	NO.	SIZE	LENGTH	MARK	NO.	SIZE	LENGTH
END UNIT							
a	6	13	2.36 m				
b_1	2	16	2.36 m				
c					3	10	0.61 m
D_1	20	13	0.46 m				
INTERMEDIATE UNIT							
a	8	13	2.36 m				
b_2	2	16	2.21 m				
c					6	10	0.61 m
D_1	18	13	0.46 m				

BENDING DIAGRAMS

ALL DIMENSIONS ARE OUT TO OUT

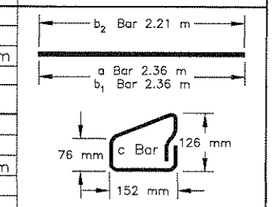

GENERAL NOTES

1. PRECAST CONCRETE SHALL ATTAIN A MINIMUM 28 DAYS COMPRESSIVE STRENGTH OF 27.6 MPa IN ACCORDANCE WITH AASHTO T22 (ASTM C-39). THE CONCRETE SHALL BE CLASS A(AE) CONFORMING TO SECTION 552 OF THE FP-03.
2. REINFORCING STEEL SHALL CONFORM TO ASTM A615 GRADE 420. ALL STRUCTRUAL STEEL SHALL CONFORM TO AASHTO M270M, Grade 250.
3. EACH UNIT SHALL CONFORM TO THE AASHTO MS-18 HIGHWAY LOADING REQUIREMENTS.
4. EACH UNIT SHALL BE FABRICATED TO CONFORM TO THE ROADWAY CROWN AS SHOWN ON THE PLANS OR AS DESIGNATED BY THE AOTR/COR.
5. BOLTS, WASHERS, NUTS, & ANGLES SHALL BE GALVANIZED IN ACCORDANCE WITH AASHTO M-111.
6. ALL TRAFFIC GRILL UNITS, INCLUDING STEEL ANGLES SHALL BE SHOP PAINTED WITH ONE (1) PRIMER COAT, ONE (1) INTERMEDIATE COAT, ONE (1) FINISH COAT IN ACCORDANCE WITH SECTION 563, PAINT SYSTEM 2 OF THE FP-03.
7. ALL WING BRACES SHALL BE CONSIDERED SUBSIDIARY ITEMS TO THE CATTLEGUARD UNIT.
8. THE CONTRACTOR HAS THE OPTION TO USE STEEL FRAME CATTLEGUARDS PROVIDED IT CAN BE SHOWN TO BE COST EFFECTIVE WITH A COST BENEFIT ANALYSIS SHOWING COST SAVINGS SUBMITTED FOR REVIEW AND APPROVAL. THE CONTRACTOR SHALL SUBMIT SHOP DRAWINGS AND INSTALLATION DETAILS TO THE AOTR/COR FOR APPROVAL. THE CONTRACTOR SHALL ASSUME RESPONSIBILTY FOR PATENT PROTECTION RIGHTS.
9. ELASTOMERIC BEARING PADS SHALL BE SEAL WITH EPOXY ADHESIVE PRIOR TO THE TRAFFIC GRILL UNITS.
10. SEE NOTE 5 OF SHEET 52 OF 58.

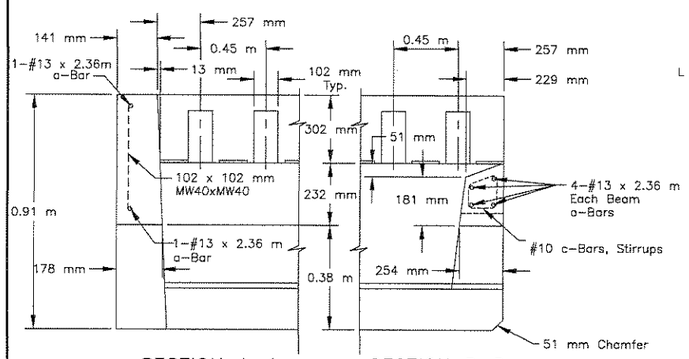

SECTION A–A

SECTION B–B

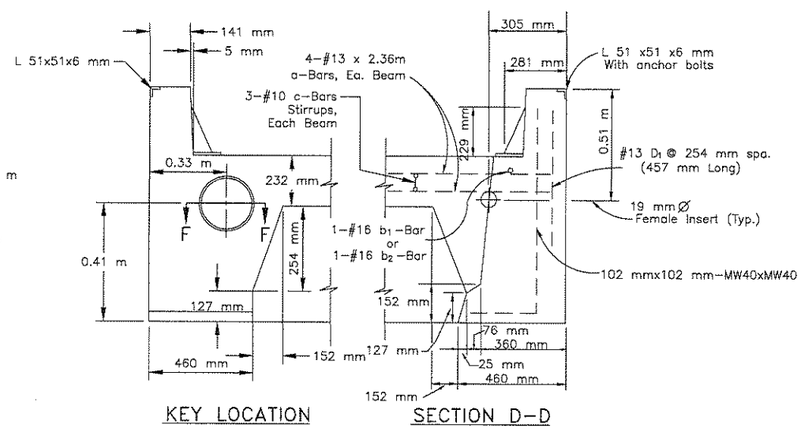

KEY LOCATION

SECTION D–D

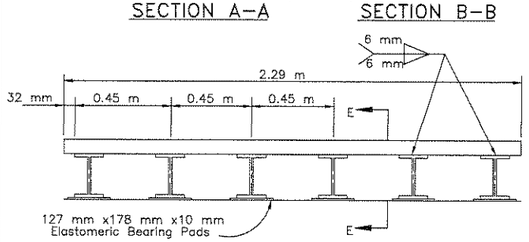

TRAFFIC GRILLE UNIT

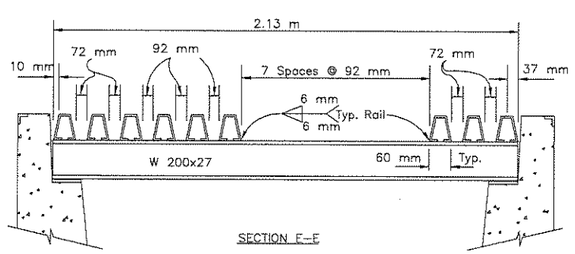

SECTION E–E

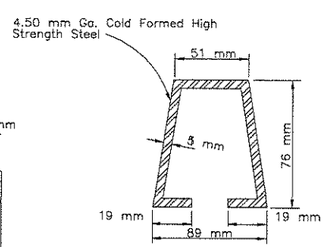

STEEL CROSSBAR SECTION

15 Req'd for 1 Grid

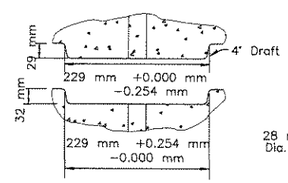

SECTION F–F

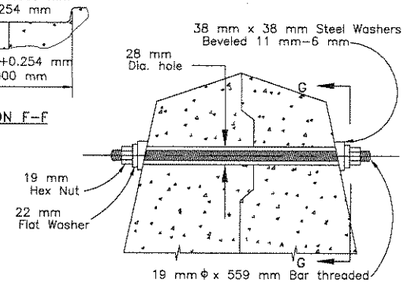

TIE BOLT DETAIL

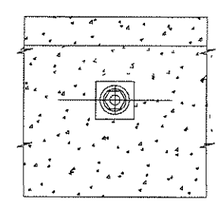

SECTION G–G

UNITED STATES
DEPARTMENT OF THE INTERIOR
BUREAU OF INDIAN AFFAIRS

NAVAJO REGIONAL OFFICE * DIVISION OF TRANSPORTATION

PRE-CAST CONCRETE CATTLEGUARD DETAILS

DRAWN BY: D.O.T.	DATE: 01/91
DESIGNED BY: D.O.T.	DATE: 01/91
REVISED: 08/13/09	FILE: STD-Cattle_Guard
BY: STRUCT	SCALE: NTS

REGION	STATE	RESERVATION	ROUTE	PROJECT NO.	SHEET	TOTAL SHEETS
NAVAJO	NEW MEXICO	NAVAJO	N46	N46(1)1,2&4	52	58

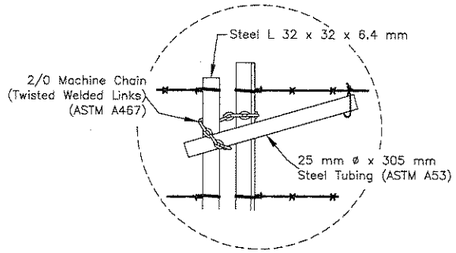

DETAIL 1 – GATE SECURING DETAIL

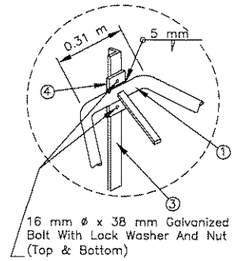

DETAIL 2

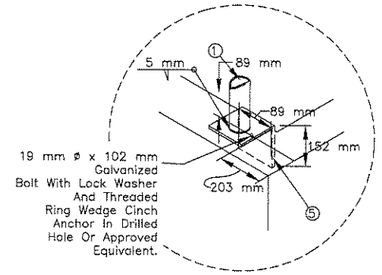

DETAIL 3

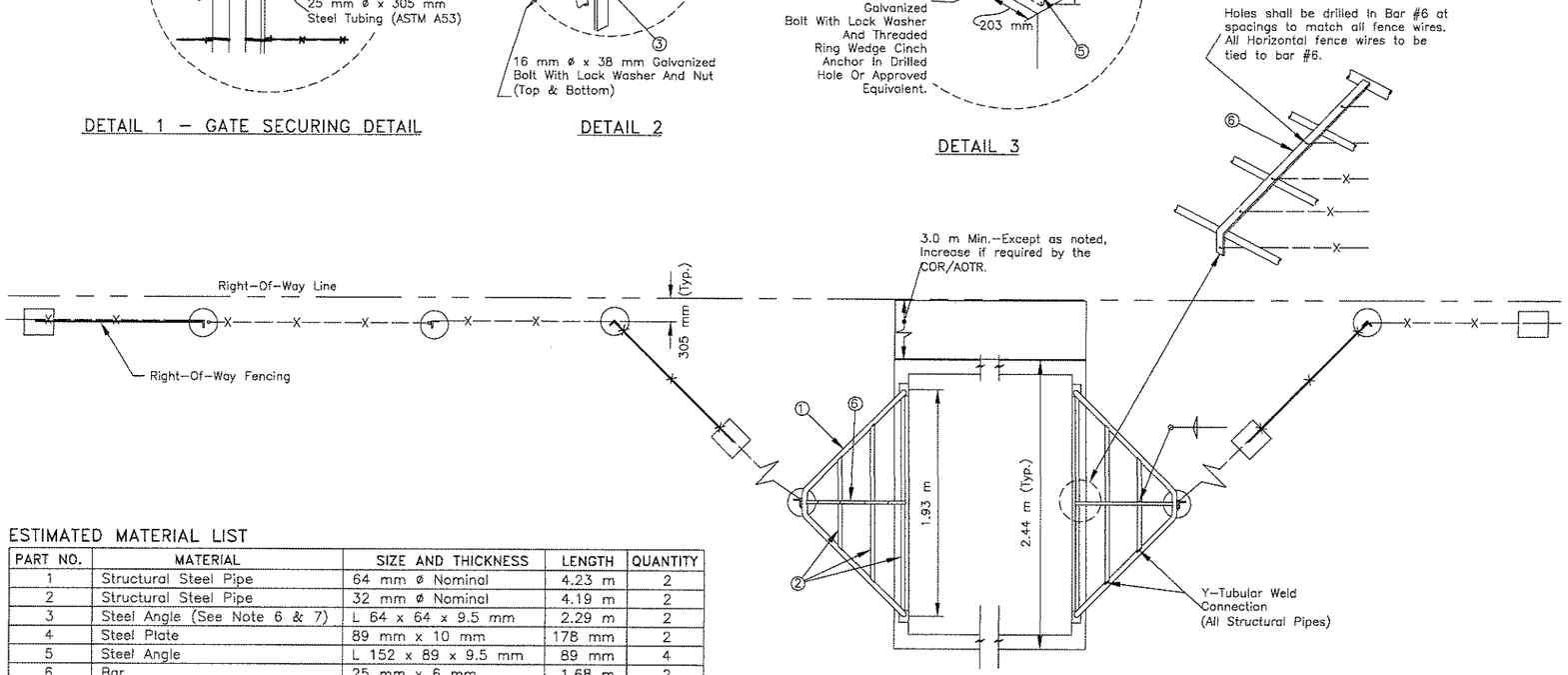

PLAN VIEW

PRECAST CONCRETE CATTLEGUARD LAYOUT

ESTIMATED MATERIAL LIST

PART NO.	MATERIAL	SIZE AND THICKNESS	LENGTH	QUANTITY
1	Structural Steel Pipe	64 mm ø Nominal	4.23 m	2
2	Structural Steel Pipe	32 mm ø Nominal	4.19 m	2
3	Steel Angle (See Note 6 & 7)	L 64 x 64 x 9.5 mm	2.29 m	2
4	Steel Plate	89 mm x 10 mm	178 mm	2
5	Steel Angle	L 152 x 89 x 9.5 mm	89 mm	4
6	Bar	25 mm x 6 mm	1.68 m	2
	Bolts, Nuts and Washers	As Shown		

GENERAL NOTES

1. Structural pipe shall conform to ASTM A53, Grade B. All other structural steel shall conform to ASTM A36.
2. Bolts, nuts, and washers shall be galvanized in accordance with AASHTO M111 (ASTM A123).
3. All wing brace structural steel and pipe shall receive one (1) primer coat, one (1) intermediate coat, and one (1) finish coat in accordance with Section 563, Paint System 2 of FP–03.
4. All structural pipe joints shall be fabricated in accordance with AISC Manual of Steel Construction, Latest Edition.
5. Welding design details shall conform to the AASHTO Standard Specifications for Highway Bridges, Latest Edition.
6. The supporting wing brace posts length (part 3) shall be 2.3 meter (minimum). Under certain conditions (such as drain through cattleguard, high embankment, etc) the length of the post may vary to fully support the wing braces. This work shall be incidental to Item 61903–0310, 61903–0710 or 61903–1210. Gate shall be subsidiary item to the cattleguard pay Item(s).
7. The AOTR/COR may adjust the finished cattleguard elevation as needed to fit field/drainage condition. The Contractor shall regrade the adjoining turnout approaches as required. This work shall be considered incidental to Item 61903–0310, 61903–0710 or 61903–1210. If surrounding topography allows/requires and if directed by the AOTR/COR, the contractor shall construct a furrow ditch and/or placed riprap to drain the cattleguard. This work shall be paid under Bid Items 20425–2000 and/or 25101–2000.
8. At skewed turnout locations, the cattleguard shall be installed perpendicular to turnout.
9. At 4.5 m wide turnout the section of the turnout between the back edge of the cattleguard and the right–of–way limit shall be surfaced with a 100mm thickness of aggregate base course. The surfacing material and work shall be included in the unit price bid for the aggregate item shown in the bid schedule. At 7.0 m wide and larger turnouts, place asphalt/ABC surfacing to match turnouts structural section from cattleguard to right–of–way line or tie–in to existing asphalt roadway.
10. At cattleguard locations where the design roadway width is wider on one side of the cattleguard than the other side, the narrower roadway width shall flared out to match the wider roadway width using an 8:1 taper or to the length allow by the right–of–way width. This includes at narrow right–of–way with where the turnout radius cannot be completely install between the main road and the cattleguard. This work shall be paid under the earthwork, base course, and paving items included in the bid schedule.

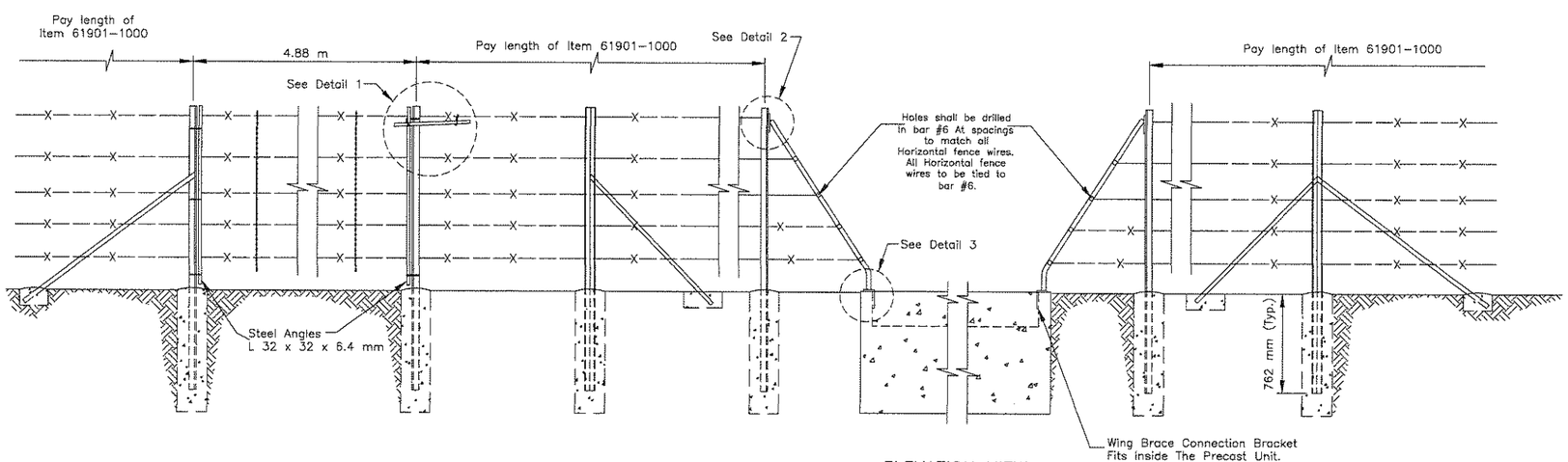

ELEVATION VIEW

PRECAST CONCRETE CATTLEGUARD LAYOUT

UNITED STATES
DEPARTMENT OF THE INTERIOR
BUREAU OF INDIAN AFFAIRS
NAVAJO REGION OFFICE * DIVISION OF TRANSPORTATION

CATTLEGUARD
INSTALLATION DETAILS

Designed by: NRO–DOT	
Drawn by: NRO–DOT	Date: 11–28–08
Revised by: cdh	Date: 08/13/09
File Name: STD–CGuard Wing Brace	

REGIONAL AREA	STATE	RESERVATION	ROUTE	PROJECT NO.	SHEET	TOTAL SHEETS
NAVAJO	NM	NAVAJO	N46	N46(1)1,2&4	53	58

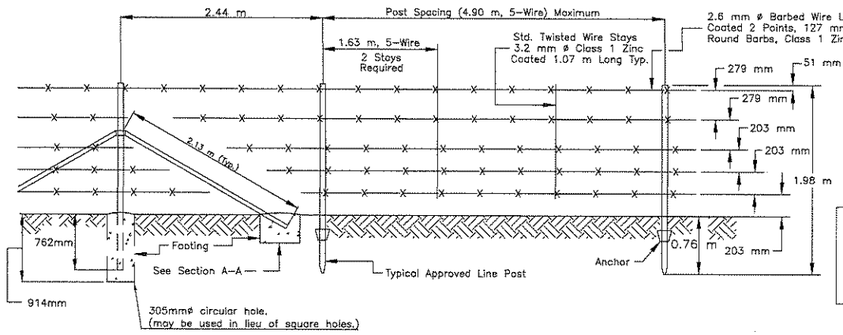

STANDARD 5 LINE GALVANIZED BARBED WIRE PANEL

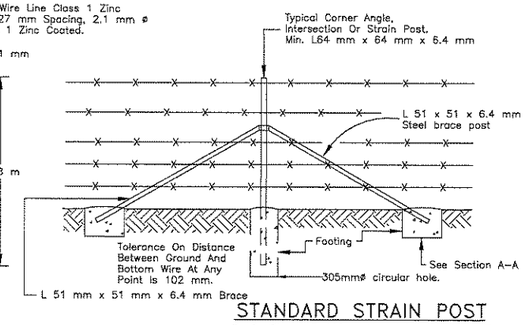

STANDARD STRAIN POST

To Be Placed @ 198 m Max. Intervals. Strain Posts With Braces Shall Be Installed At All Corners (R/W Corners Etc.) And Angles Exceeding 15° And Fence Intersections. A Third Brace, In Line With Cross Fence, Required At Intersection.

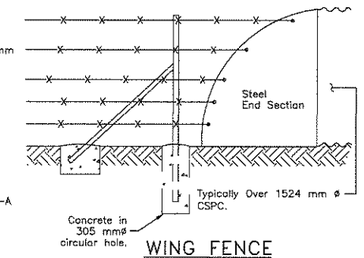

WING FENCE

Detail For Corr. Metal Culvert

GENERAL NOTES

1. CORNER, GATE, INTERMEDIATE BRACE POSTS AND LINE POSTS SHALL BE EITHER GALVANIZED OR PAINTED IN ACCORDANCE WITH AASHTO M281. METAL POST AND BRACES SHALL BE FABRICATED FROM RAIL, BILLET, OR COMMERCIAL GRADE STEEL CONFORMING WITH THE REQUIREMENT OF ASTM A702.
2. LINE POSTS SHALL BE FABRICATED IN ACCORDANCE WITH AASHTO M281, AND SHALL A NOMINAL WEIGHT OF 1.98 kg/m EXCLUSIVE OF ANCHOR PLATES. ANCHOR PLATES SHALL BE CLAMPED, WELDED OR RIVETED TO THE SECTION IN SUCH A MANNER AS TO PREVENT DISPLACEMENT WHEN THE POSTS ARE DRIVEN.
3. WHEN LINE POST ANCHORS ARE OMITTED, DUE TO CHANGE IN SOIL CONDITIONS SUCH AS ROCK, THEN THE POSTS SHALL BE SET IN CONCRETE. THIS WORK SHALL BE CONSIDERED INCIDENTAL TO ITEM 61901-1000.
4. TIE WIRE, WIRE FASTENERS OR WIRE CLIPS FOR FASTENING BARBED AND WOVEN FABRIC FENCING TO THE STEEL POSTS SHALL BE 3.0 mm DIA. STEEL WIRE, CLASS 1 (ZINC COATED), SOFT TEMPER AND MEET THE REQUIREMENTS OF ASTM A641. FURNISHING AND PLACEMENT OF FASTENERS SHALL BE INCLUDED WITH ITEM 61901-1000.
5. CONCRETE FOR ANCHORS, POST HOLES, ETC. SHALL HAVE A MINIMUM COMPRESSIVE STRENGTH OF 20.7 MPa IN 28 DAYS AND SHALL CONFORM TO SECTION 601 OF THE FP-03. FURNISHING AND PLACEMENT OF CONCRETE SHALL BE INCLUDED WITH ITEM 61901-1000.
6. TWO SPLICES ON THE SAME LINE BETWEEN THE STRAIN POST ASSEMBLIES SHALL NOT BE PERMITTED. NO SPLICES SHALL BE PLACED CLOSER THAN 30 METER OF ANY STRAIN POST ASSEMBLIES.
7. CONNECT ALL R/W FENCING TO CATTLE GUARDS, CULVERTS (GREATER THAN 1524 mm DIA.), AND CONCRETE STRUCTURES AS SHOWN ON THESE PLANS, AND/OR AS DIRECTED BY THE COR/AOTR.
8. ANY CONFLICT IN PLACEMENT OF THE R/W FENCING AT DRAINAGE PIPE LOCATION, DUE TO NARROW R/W WIDTH OR OTHER CONSTRICTIONS, THE FENCE MAY BE PLACED OVER THE DRAINAGE STRUCTURE. THIS WORK SHALL BE CONSIDERED INCIDENTAL TO ITEM 61901-1000.
9. CLEARING AND GRUBBING SHALL INCLUDE SHAPING AND/OR REMOVAL OF SMALL MOUNDS NECESSARY TO PRESENT A SMOOTH UNIFORM APPEARANCE OF BOTH GROUND AND FENCING LINE. THIS WORK SHALL BE INCIDENTAL TO THE INSTALLATION OF FENCING AND NO ADDITIONAL PAYMENT SHALL BE MADE.
10. ALL DRILLING INTO ROCK MATERIAL, ETC. SHALL BE INCIDENTAL TO THE INSTALLATION OF FENCING AND NO ADDITIONAL PAYMENT SHALL BE MADE.
11. TYPE 2 GATE CLOSURE DEVICE SHALL BE STEEL PIPE, NPS 26.7 mmø SCHEDULE 40, CONFORMING TO THE REQUIREMENT OF ASTM A53. THE GATE CLOSURE STEEL CHAIN SHALL BE WELDED TO THE STEEL PIPE AND ANGLE IRON FENCE POST. THIS WORK SHALL BE INCIDENTAL TO THE INSTALLATION OF FENCING AND NO ADDITIONAL PAYMENT SHALL BE MADE.
12. CONTRACTOR SHALL BE REQUIRED TO INSTALL SAG WEIGHTS WHERE VERTICAL CLEARANCE BETWEEN THE BOTTOM WIRE AND NATURAL GROUND IS 610 mm OR GREATER. THIS WORK SHALL BE INCIDENTAL TO THE INSTALLATION OF FENCING.

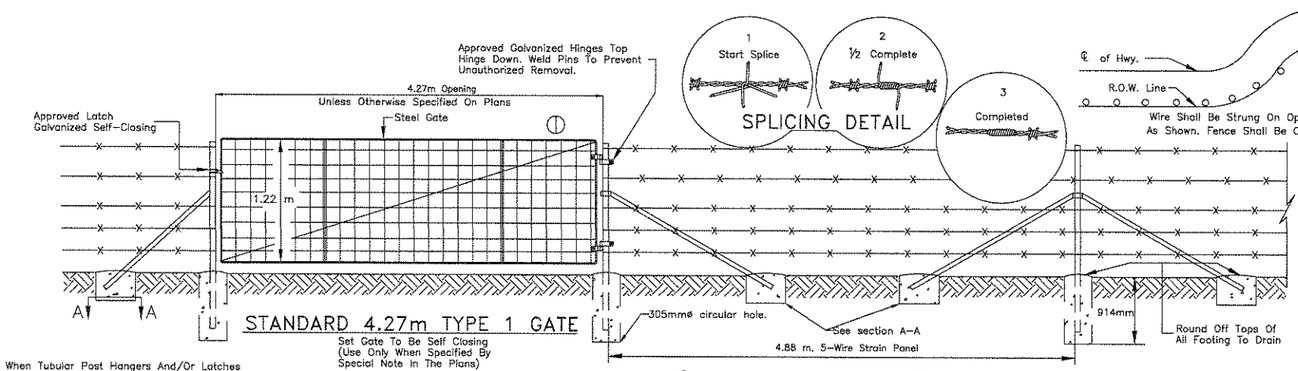

STANDARD 4.27m TYPE 1 GATE

Set Gate To Be Self Closing (Use Only When Specified By Special Note In The Plans)

NOTE: When Tubular Post Hangers And/Or Latches Are Used, It Shall Be Drilled For A Single 2.38 mm ø Min. Drive Pin To Prevent Rotation Of The Hangers And/Or Latches.

For Gate Details At Cattle guard Location See Standard Cattle guard Drawings.

END POST

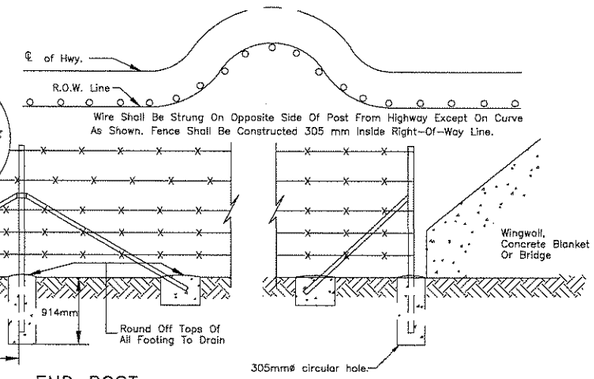

CONNECTION TO MAJOR STRUCTURES

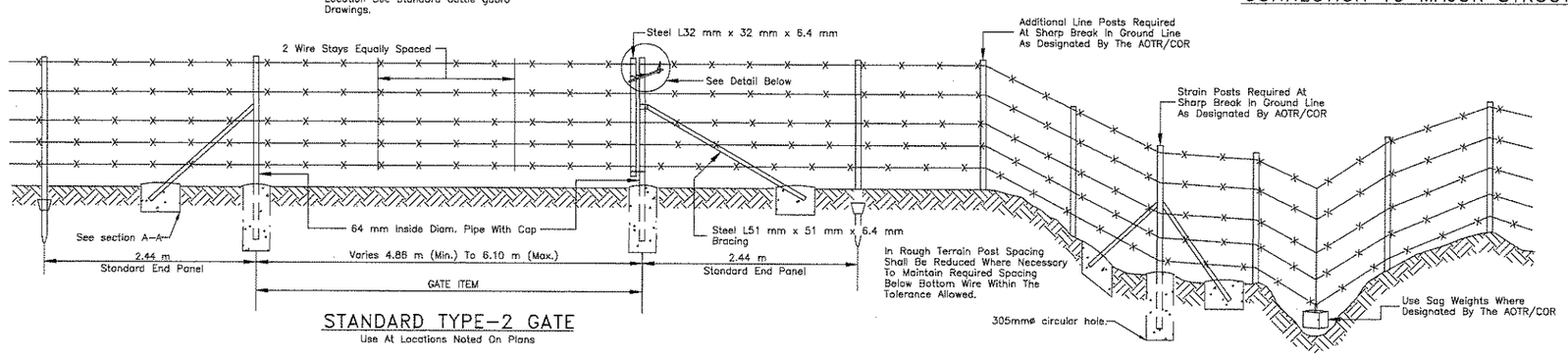

STANDARD TYPE-2 GATE

Use At Locations Noted On Plans

FENCE PROFILE IN ROUGH TERRAIN

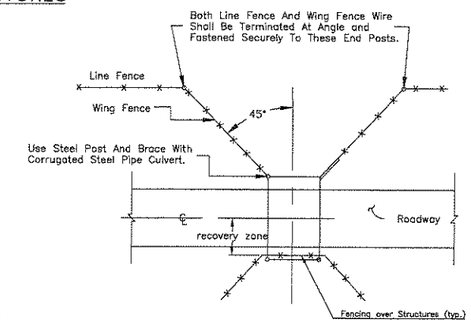

WING FENCE DETAIL

TYPICAL STEEL POST SECTION

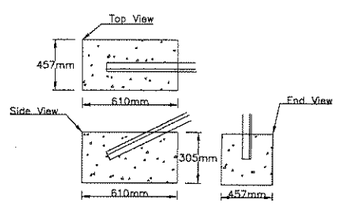

SECTION A-A

Concrete Footing for Corner and Strain Posts.

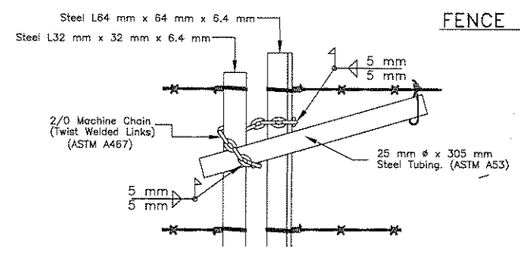

GATE SECURING DETAIL

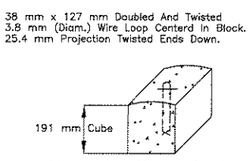

CONCRETE SAG WEIGHT DETAIL

Min. Weight Of Concrete Sag Shall Be 16 kg.

UNITED STATES
DEPARTMENT OF THE INTERIOR
BUREAU OF INDIAN AFFAIRS
NAVAJO REGIONAL OFFICE * DIVISION OF TRANSPORTATION

STANDARD FENCING DETAILS

DRAWN BY: NRODOT	DATE: 6/20/04
DESIGNED BY: NRODOT	DATE: 7/14/04
REVISED: 08/13/09	BY: cdh
SCALE: NTS	
FILENAME: STD-fence	
SHEET MODEL NAME: PLOT SHEET	

REGION	STATE	RESERVATION	ROUTE	PROJECT NO.	SHEET	TOTAL SHEETS
NAVAJO	NEW MEXICO	NAVAJO	N46	N46(1)1,2&4	54	58

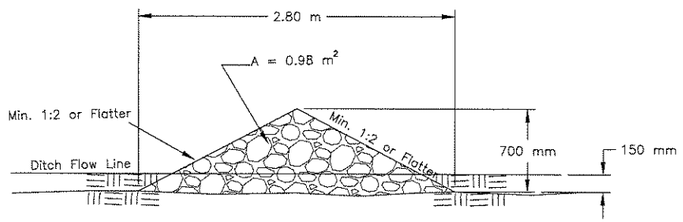

RIPRAP CHECK DAM

(No Filter Fabric Required Under Check Dams)

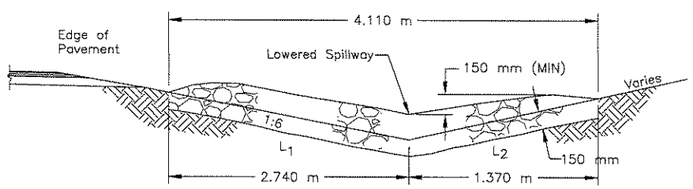

RIPRAP CHECK DAM IN V-DITCH

FRONT VIEW

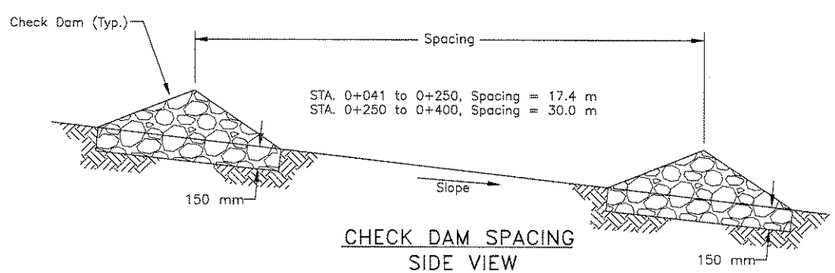

CHECK DAM SPACING

SIDE VIEW

CHECK DAM NOTES

1. Workmanship and Materials Shall Conform to The Standard Specifications For Construction Of Roads And Bridges On Federal Highway Projects (FP-03).
2. Round All Sharp Contours As Required To Fit The Soil Erosion Material Flush With The Existing Ground.
3. The Contractor Shall Be Required To Make Field Adjustments To Match Actual Field Conditions As Directed By The COR/AOTR. No Additional Payment Shall Be Made For Such Adjustments.
4. Embankment Shall Be Compacted To 95% Of Maximum Density As Determined By AASHTO T-99, Method C And Conform To Section 204 Of FP-03.
5. Stone Size Shall Conform To Table 705-1, Section 705, Stone For Riprap, Class 2.
6. Rock Check Dam Shall Be Included In Bid Item 25101-2000.

ITEM 25101-2000: PLACED RIPRAP, CLASS 2 (CHECK DAM)

STATION	LOC.	WIDTH (m)		NUMBER OF CHECK DAMS	VOLUME PER CHECK DAM (m^3)	TOTAL VOLUME (m^3)
		L1	L2			
0+041 to 0+400	Rt.	2.74	1.37	17	4.03	68.51
					TOTAL:	68.51 m^3

UNITED STATES
DEPARTMENT OF THE INTERIOR
BUREAU OF INDIAN AFFAIRS
NAVAJO REGION OFFICE * DIVISION OF TRANSPORTATION

CHECK DAM DETAILS

Designed by: NRO-DOT

Drawn by: JLB, cdh Date: 01/07/10

Revised by: Date:

File Name: Std-Check Dam

REGION	STATE	RESERVATION	ROUTE	PROJECT NO.	SHEET	TOTAL SHEETS
NAVAJO	NEW MEXICO	NAVAJO	N46	N46(1)1,2&4	55	58

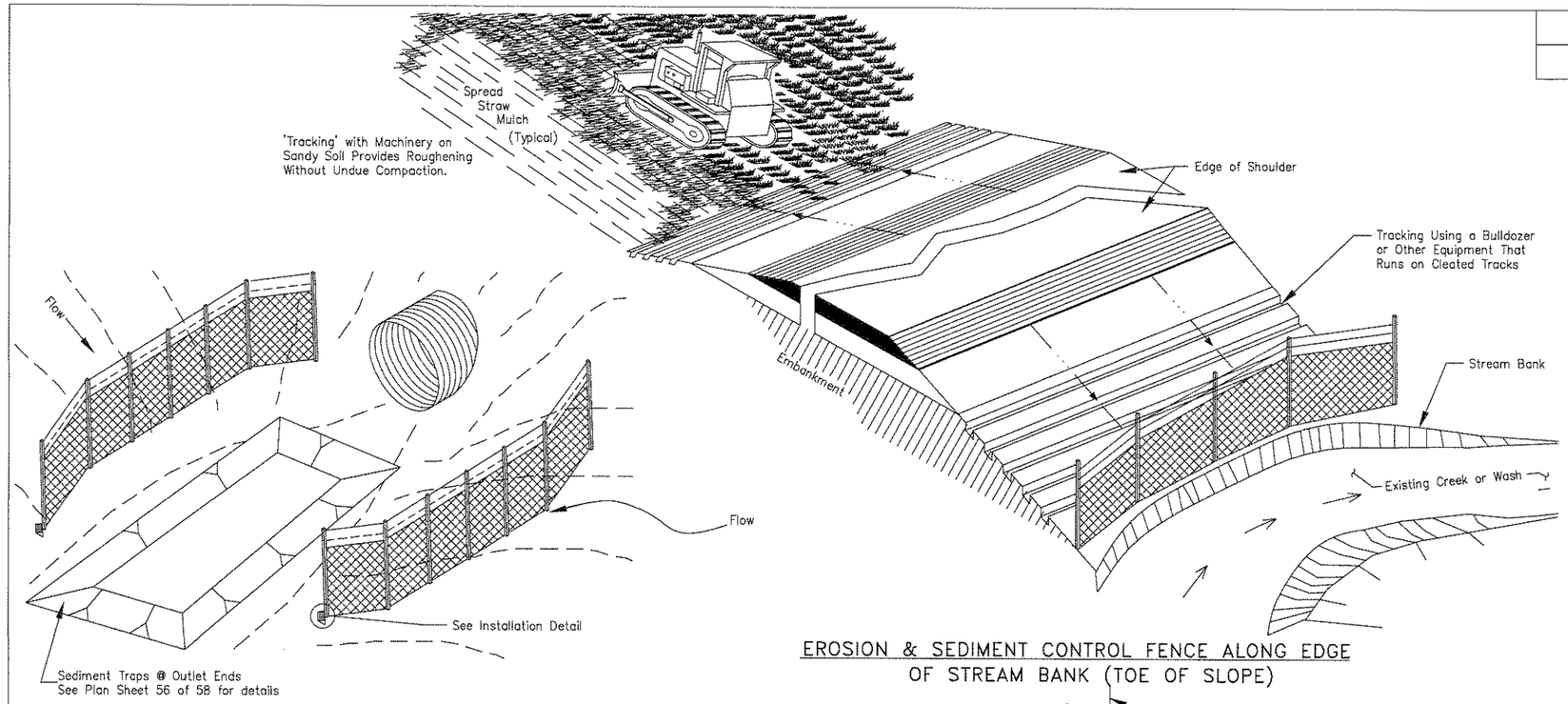

EROSION & SEDIMENT CONTROL FENCE ALONG EDGE OF STREAM BANK (TOE OF SLOPE)

EROSION & SEDIMENT CONTROL FENCE AT DRAINAGE STRUCTURE

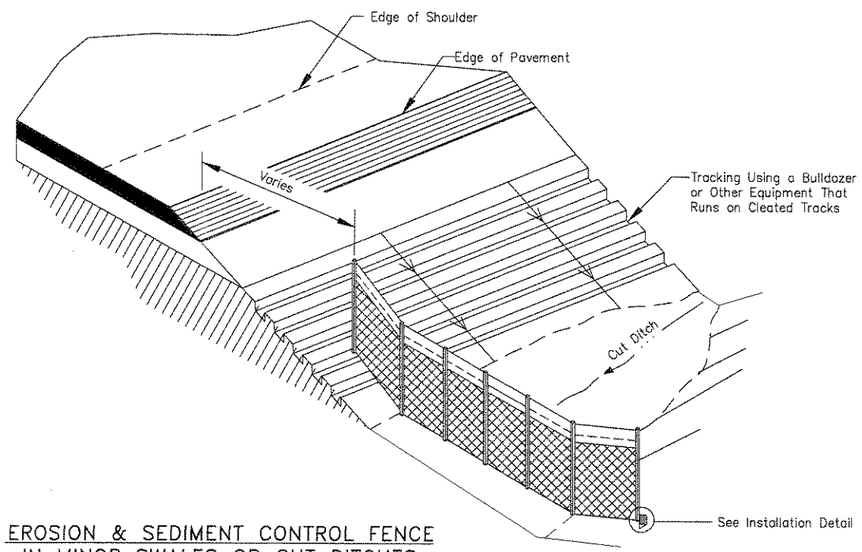

EROSION & SEDIMENT CONTROL FENCE IN MINOR SWALES OR CUT DITCHES (APPROX. 60 m SPACING FOR FABRIC)

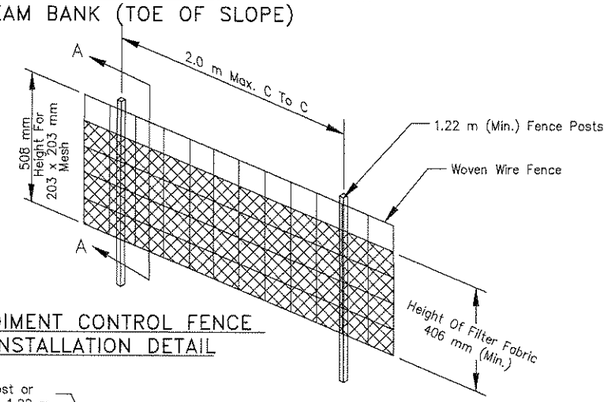

SEDIMENT CONTROL FENCE INSTALLATION DETAIL

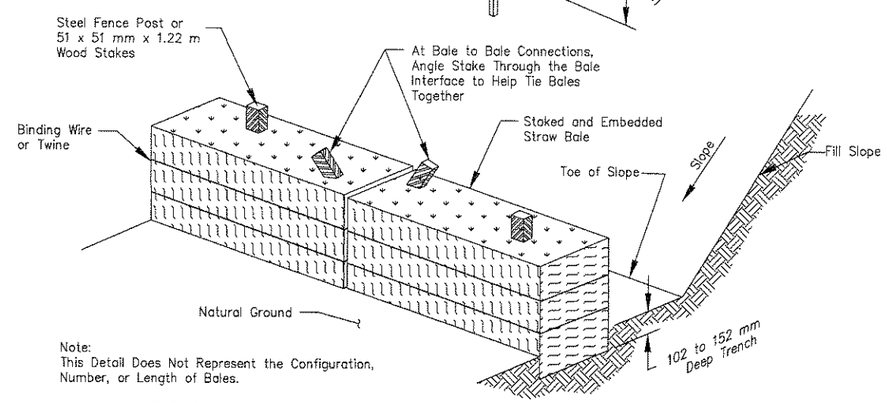

Note:
This Detail Does Not Represent the Configuration, Number, or Length of Bales.

TYPICAL STRAW BALE STAKING AND TRENCHING DETAIL

GENERAL NOTES

1. The Contractor Shall Prepare and Submit a Storm Water Pollution Prevention Plan (SWPPP) in Full Details For All Phases of the Work For Review and Approval at Least 14 Calendar Days Before Implementation. The Plan Shall Meet the Requirements Herein and in Section 157 of FP-03 As Modified in the Supplemental Specifications. See Special Contract Requirements For NPDES Permit Requirements.

2. The Silt Fencing Consists of 914 mm Sediment Control Fabric Cloth With Buried-Toe, and Steel Posts (Tee or U Type) Spaced at 2.0 m With 2 mm Size Welded Wire Back-Up Fence.

3. Woven Wire Fabric to Be Fastened Securely to Fence Posts With Wire Ties or Stables. Filter Cloth to Be Fastened Securely to Woven Wire Fence With Ties Spaced Every 610 mm At the Top and Mid-Section. Geotextile Material For Silt Fencing Shall Be Type-V Under Sub-Section 714.01 of FP-03.

4. When Two Sections of Filter Cloth Adjoin Each Other They Shall Be Overlapped By 152 mm and Folded. Maintenance Shall Be Performed as Needed and Material Removed to Prevent "Bulges" Developing in the Silt Fence.

5. The Silt Fence Shall Be Installed Along the Roadway Ditches, Along the Bottom of All Embankment Fills That Are Within 2.0 m of Existing Streams, Creeks, or Washes, and in Areas With Highly Erosive Soils. Silt Fence to Be Placed 1-2 Meters Toward the R.O.W. Lines From the Base of Fill Slopes 1:3 or Steeper in Accordance With Section 157 of FP-03 and the Supplemental Specifications.

6. Straw Bales May Be Used at the Top of Cut Backslopes and For Dikes Provided They Are Properly Anchored With Steel Fence Posts or 51x51 mm X 1.22 m Wood Stakes (Two Per Bale) Chored 508 mm Into the Natural Ground. Straw Bales Shall Be Certified 0.5% Weed Free. Do Not Use Straw Bales in Areas of Concentrated Flow Nor in Cut Ditches.

7. Furnishing and Placement of Silt Fence Material and Other Erosion Control Measures Shall Be Included in the Unit Price Bid For Item 15701-0000.

8. Sediment/Silt Fencing Shall Be Placed at All Locations Where Embankments Have Slope Distances of 30.0 m or Greater. The Sediment Fencing Will Be Placed at the Toe of Slopes Offset 1-2 Meters.

9. The Contractor Shall Inspect and Maintain All SWPPP Measures Weekly and After Each Significant Storm Event (i.e. 25 mm of Moisture in 24 Hours).

10. Prior To Acceptance, All Project Areas (as Determined By the Division Manager) Showing Erosion Damage Caused by the Contractor's Failure to Properly Maintain His Erosion Control Structures Shall Be Repaired. Any Specified Erosion Control Materials, Structures, or Devices Damaged or Lost Due to Improper Installation, the Contractor's Negligence or Improper Maintenance, Shall Also Be Repaired and/or Replaced Prior to Final Acceptance at the Contractor's Entire Expense.

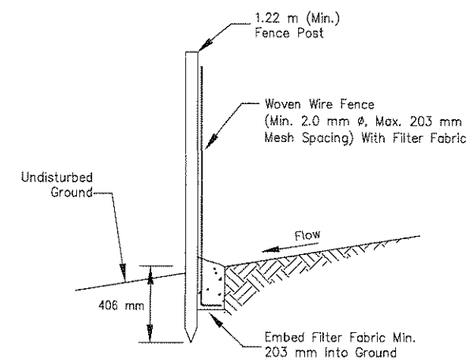

SECTION A-A

UNITED STATES
DEPARTMENT OF THE INTERIOR
BUREAU OF INDIAN AFFAIRS
NAVAJO REGION OFFICE * DIVISION OF TRANSPORTATION

STORMWATER POLLUTION
EROSION/SEDIMENT CONTROL DETAILS

Designed by: NRDOT	
Drawn by:	Date:
Revised by:	Date:
File Name: STD_ERO_1	

REGION	STATE	RESERVATION	ROUTE	PROJECT NO.	SHEET	TOTAL SHEETS
NAVAJO	NEW MEXICO	NAVAJO	N46	N46(1)1,2&4	56	58

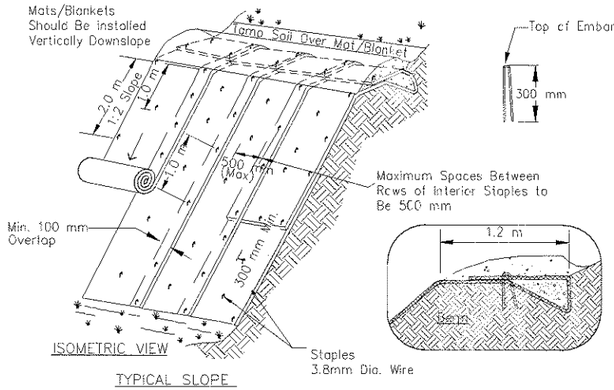

TYPICAL SLOPE

SOIL STABLIZATION

1. Slope surface shall be free of rocks, clods, sticks and grass. Mats/blankets shall have good soil contact.
2. Apply permanent seeding before placing blankets.
3. Lay blankets loosely and stake or staple to maintain direct contact with the soil. Do not stretch.
4. Fabricate Staples From 3.8 mm Diameter Wire Conforming to ASTM A641.

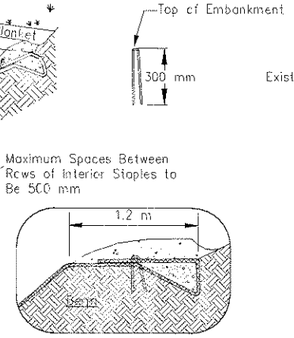

EROSION BLANKETS & TURF REINFORCEMENT MATS SLOPE INSTALLATION

Not to Scale

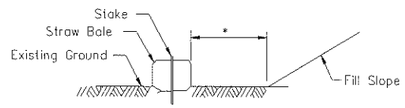

SECTION D–D

* See General Notes

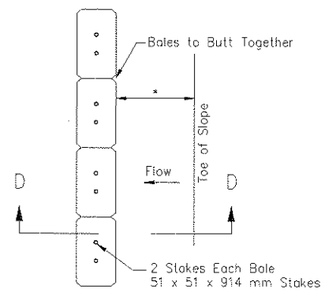

PLAN

STRAW BALE SILT BARRIER

* See General Notes

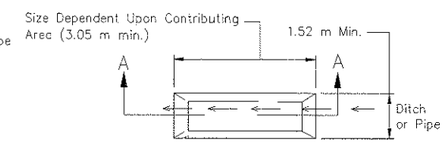

SEDIMENT TRAP

(Traps Shall Not Fill to Beyond One-Half Capacity Prior to Cleaning)

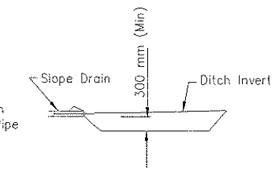

SECTION A–A

GENERAL NOTES

1. SEE SHEET 55 FOR ADDITIONAL NOTES AND DETAILS.
2. CONSTRUCT SEDIMENT BASIN AND TRAPS, EROSION CHECKS AND/OR FILTERS IN STRATEGIC LOCATIONS ON THE PROJECT TO FILTER STORM RUNOFF BEFORE IT LEAVES THE PROJECT CONSTRUCTION LIMITS OR ENTERS A STREAM AS SHOWN IN THE APPROVED SWPPP.
3. CLEAN ALL SEDIMENT BASINS AND TRAPS OF ACCUMULATED SEDIMENT WHEN HALF FULL OF SEDIMENT.
4. USE DRAIN PIPE, RIPRAP, GEOTEXTILE FABRIC, OR GRASS LINED WATERWAY FOR TEMPORARY SLOPE DRAINS TO CHANNEL RUNOFF DOWN SLOPES. CHANNEL WATER INTO SLOPE DRAINS WITH STRAW BALES, WATTLES OR EARTH BERMS CONSTRUCTED AT THE TOP OF A CUT SLOPE. ANCHOR SLOPE DRAINS TO THE SLOPE.
5. THE CONTRACTOR SHALL ADJUST THE DIMENSIONS AND/OR LOCATIONS OF TEMPORARY SEDIMENT AND EROSION CONTROL DEVICES TO FIT ACTUAL FIELD CONDITIONS.
6. REMOVE AND DISPOSE OF EROSION CONTROL MEASURES WHEN THE PERMANENT EROSION CONTROL MEASURES ARE SATISFACTORILY ESTABLISHED AND DRAINAGE DITCHES AND CHANNELS ARE LINED AND STABILIZED, IN ACCORDANCE WITH SECTION 157 OF FP-03.

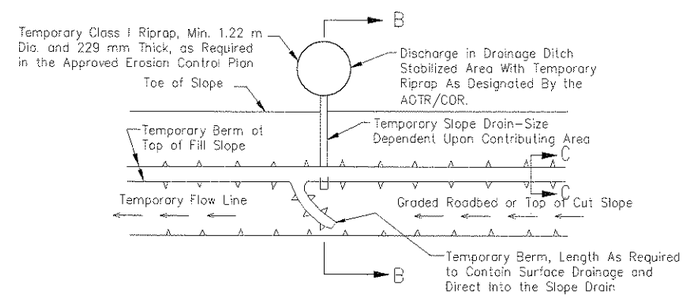

PLAN VIEW

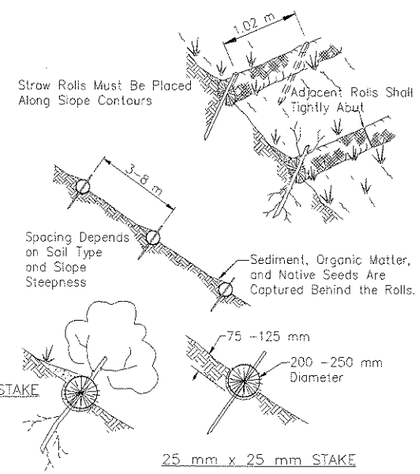

Note:
Straw Roll Installation Requires the Placement and Secure Staking of the Roll in a Trench, 75–125 mm Deep, Dug on Contour. Runoff Must Not Be Allowed to Run Under or Around Roll.

STRAW ROLLS

Not To Scale

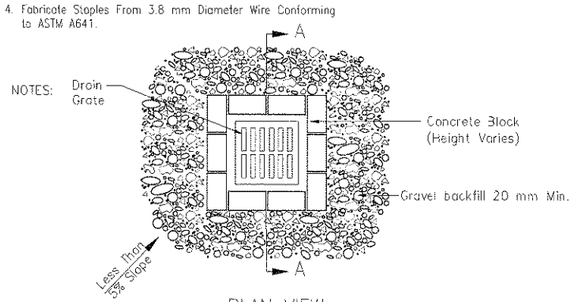

PLAN VIEW

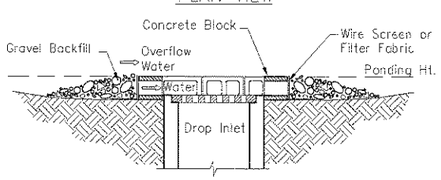

SECTION A – A

NOTES:

1. Drop Inlet Sediment Barriers Are to Be Used For Small, Nearly Level Drainage Areas. (Less Than 5%)
2. Excavate a Basin of Sufficient Size Adjacent to the Drop Inlet.
3. The Top of the Structure (Ponding Height) Must Be Well Below the Ground Elevation Downslope to Prevent Runoff From Bypassing the Inlet. A Temporary Dike May Be Necessary on the Downslope Side of the Structure.

BLOCK AND GRAVEL DROP INLET SEDIMENT BARRIER

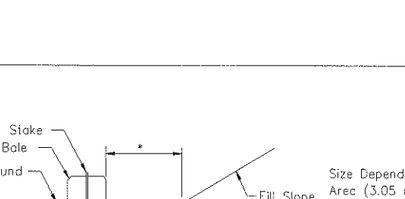

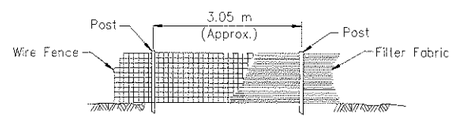

FILTER FABRIC SILT FENCE

*See General Notes

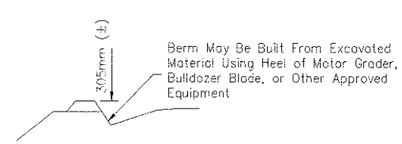

SECTION C–C

Temporary Slope Drain, Berm. (For Fill and Cut Slopes)

NOTE:
Temporary Berms May Also Be Constructed of Straw Bales Set 104–152mm into Ground.

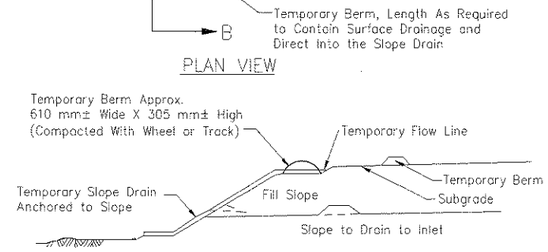

SECTION B–B

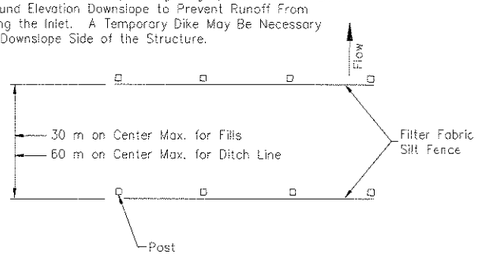

PLAN

SILT FENCE EROSION CHECK

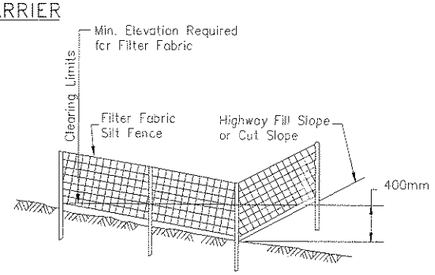

ELEVATION

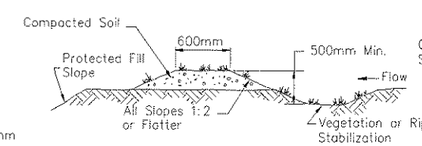

TYPICAL FILL DIVERSION

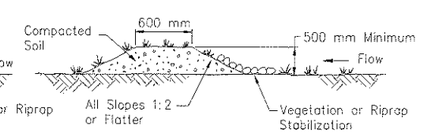

TYPICAL TEMPORARY DIVERSION DIKE

(For Top of Cut Back Slopes)

TEMPORARY DIVERSION DIKE

Notes:

1. The Channel Behind the Dike Shall Have Positive Grade to a Stabilized Outlet.
2. The Dike Shall Be Adequately Compacted to Prevent Failure.
3. The Dike Shall Be Stabilized With Temporary or Permanent Seeding or Riprap.

UNITED STATES
DEPARTMENT OF THE INTERIOR
BUREAU OF INDIAN AFFAIRS
NAVAJO REGION OFFICE * DIVISION OF TRANSPORTATION

STORMWATER POLLUTION
EROSION/SEDIMENT CONTROL DETAILS

Designed by: NRDOT	
Drawn by:	Date:
Revised by:	Date:
File Name: STD_ERO_2	

REGION	STATE	RESERVATION	ROUTE	PROJECT NO.	SHEET	TOTAL SHEETS
NAVAJO	NEW MEXICO	NAVAJO	N46	N46(1)1,2&4	57	58

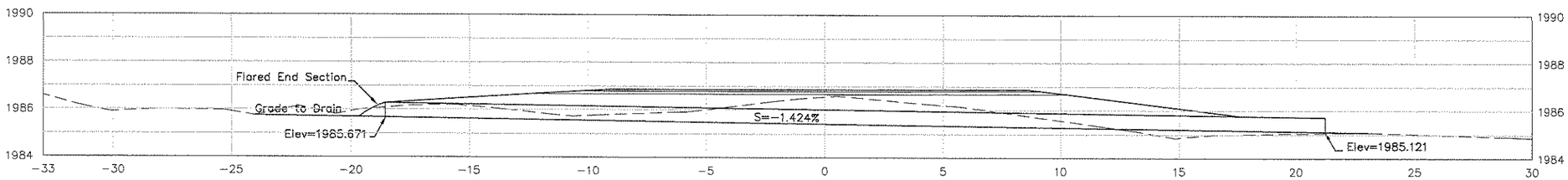

Sta 1+773.800, 56° Skew
1-889 mm x 610 mm x 39.79 m CSPA
56° Skew

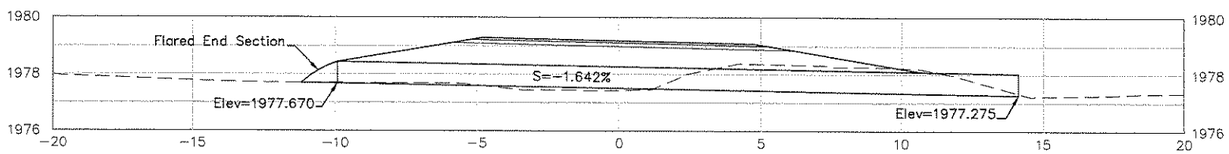

Sta 1+270.000
1-762 mm x 24.05 m CSPC
90° Skew

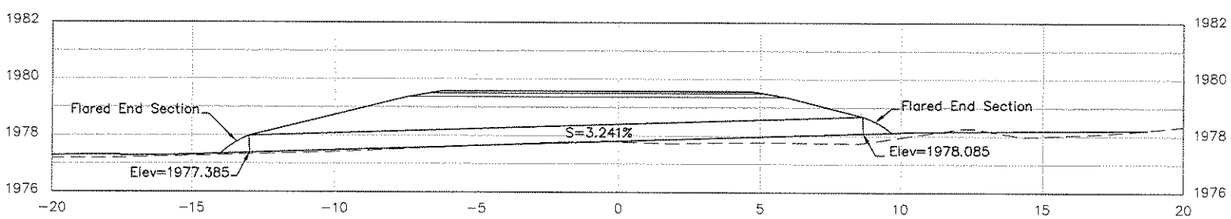

Sta 1+117.900, 13.700 m Lt.
1-610 mm x 21.63 m CSPC
Under Turnout

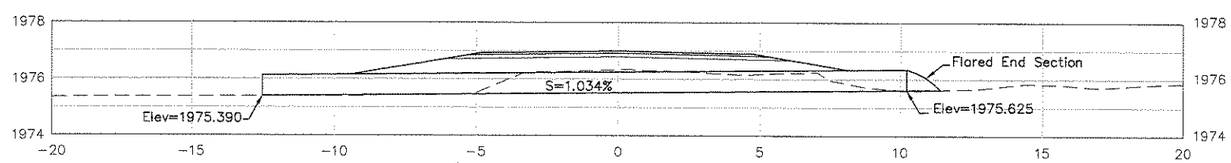

Sta 0+619.000
2-1067 mm x 737 mm x 22.73 m CSPA
90° Skew

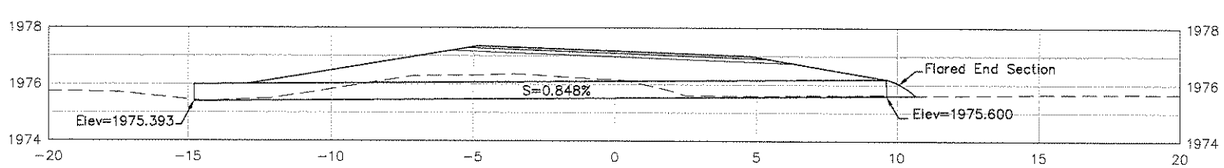

Sta 0+510.000
1-610 mm x 24.41 m CSPC
90° Skew

GENERAL NOTES

1. DRAINAGE PIPE(S) INVERT ELEVATION(S) AND LENGTHS ARE APPROXIMATE. FINAL ELEVATIONS AND LENGTHS TO BE FIELD DETERMINED BY THE CONTRACTOR AS PART OF THE REVISED PIPE LIST SUBMITTAL PACKAGE. GUIDANCE ON DEVELOPING A REVISED PIPE LIST WILL BE PROVIDED UPON REQUEST OF THE CONTRACTOR.
2. THE REVISED PIPE LIST SURVEY DATA SHALL BE VERIFIED BY THE AOTR/COR AND CONTRACTOR'S QCM PRIOR TO SUBMITTAL TO THE NAVAJO REGIONAL DIVISION OF TRANSPORTATION.
3. FOR MULTIPLE INSTALLATION OF ALL TYPES, A MINIMUM OF A 610 MM SPACING MEASURED ALONG THE HORIZONTAL BETWEEN FLARED END SECTIONS AT THEIR WIDEST CROSS SECTION SHALL BE USED.
4. ALL THREE (3) PIECE BODIES TO HAVE 2.77 MM THICKNESS SIDES AND 3.5 MM THICKNESS CENTER PANELS. WIDTH OF CENTER PANELS TO BE GREATER THAN 20% OF THE PIPE PERIPNERY. MULTIPLE PANEL BODIES TO HAVE LAP SEAMS WHICH ARE TO BE TIGHTLY JOINED BY 9.53 MM Ø GALVANIZED RIVETS OR BOLTS.
5. END SECTIONS FOR STEEL PIPE-ARCHES: FOR THE 1956MM X 1321MM & 2108MM 1448MM SIZES, REINFORCED EDGE TO BE SUPPLEMENTED BY 51 MM X 51 MM X 6.35 MM GALVANIZED ANGLES. THE ANGLES TO BE ATTACHED BY 9.53 MM DIA. GALVANIZED NUTS AND BOLTS. ANGLE REINFORCEMENT WILL BE PLACED UNDER THE CENTER PANEL SEAMS.
6. END SECTIONS FOR STEEL CIRCULAR PIPES: FOR 1524 MMØ THRU 2134 MMØ SIZES, REINFORCED EDGE TO BE SUPPLEMENTED WITH GALVANIZED STIFFENER ANGLES. THE ANGLES WILL BE 51 MM X 51 MM X 6.35 MM FOR 1524 MM Ø THRU 1829 MM Ø, AND 64 MM X 64 MM X 6.35 MM FOR 1981 MM Ø AND 2134 MM Ø. THE ANGLES TO BE ATTACHED BY 9.53 MM Ø GALVANIZED NUTS AND BOLTS.
7. WELDING SHALL NOT BE PERMITTED IN CONNECTING END SECTIONS TO CONNECTOR SECTIONS OR CONNECTOR SECTIONS TO PIPE.
8. TYPE NO. 1 STEEL END SECTION. CONNECT END SECTION WITH THREADED ROD WITH CONNECTOR LUG, FOR 610 MM Ø PIPE ONLY.
9. TYPE NO. 2 STEEL END SECTION. CONNECT END SECTION WITH THREADED ROD WITH ROD HOLDER, FOR 762 MM Ø AND 914 MM Ø ROUND PIPE; AND 432 MM X 330 MM THRU 1448 MM X 965 MM CSPA.
10. TYPE NO. 3 STEEL END SECTION. THE CONNECTION INCLUDES 305 MM OF THE PIPE LENGTH AS A CONNECTOR SECTION FOR PIPE ARCH SIZES 1626 MM X 1092 MM THRU 2108 MM X 1448 MM AND ROUND PIPE SIZES 1067 MM Ø THRU 2134 MM Ø. GAGES OF CONNECTOR SECTION SHALL BE THE SAME AS THE END SECTIONS AS MENTION ABOVE. THE CONNECTOR SECTION WILL BE ATTACHED TO THE END SECTION BY 9.5 MM Ø GALVANIZED RIVETS OR BOLTS APPROXIMATELY 152 MM CENTERS.
11. HELICALLY CORRUGATED PIPE. FOR TYPE NO. 5 AND TYPE NO. 3 THE DIMBLE BAND OR CORRUGATED PIPE CONNECTOR SECTION SHALL BE ATTACHED TO THE END SECTION BY 9.5 MM Ø GALVANIZED STEEL RIVETS OR BOLTS SPACED AT APPROXIMATELY 152 MM CENTERS.
12. TYPE NO. 1, TYPE NO. 2, AND TYPE NO. 3 CONNECTIONS MAY BE USED WITH WELDED SEAMS HELICALLY CORRUGATED PIPE WITH RE-ROLLED ENDS. RE-ROLLED ENDS SHALL INCLUDE A MINIMUM OF TWO (2) ANNULAR CORRUGATIONS OF THE SAME SIZE AS THE PIPE CORRUGATIONS.

UNITED STATES
DEPARTMENT OF THE INTERIOR
BUREAU OF INDIAN AFFAIRS
NAVAJO REGION OFFICE * DIVISION OF TRANSPORTATION

CULVERT DETAILS

Designed by: RDL	
Drawn by: RDL, cdh	Date: 08/13/09
Revised by:	Date:
File Name: N46_Culverts	

REGION	STATE	RESERVATION	ROUTE	PROJECT NO.	SHEET	TOTAL SHEETS
NAVAJO	NEW MEXICO	NAVAJO	N46	N46(1)1,2&4	58	58

ESTIMATED DRAINAGE STRUCTURE QUANTITIES

STATION	STRUCTURE DESCRIPTION	SKEW NO.	610 mm CSPC – 1.63mm Thickness 67.7 mm x 12.7 mm Corrugation (60201-0810) m	762 mm CSPC – 1.63mm Thickness 67.7 mm x 12.7 mm Corrugation (60201-0910) m	711 mm x 508 mm CSPA–1.63mm Thick. 67.7 mm x 12.7 mm Corrugation (60202-0510) m	889 mm x 610 mm CSPA–1.63mm Thick. 67.7 mm x 12.7 mm Corrugation (60202-0610) m	1067 mm x 737 mm CSPA–1.63mm Thick. 67.7 mm x 12.7 mm Corrugation (60202-0710) m	End Section For 610 mm CSPC * 1.63 mm Thickness (60210-0810) Ea.	End Section For 762 mm CSPC * 1.63 mm Thickness (60210-0910) Ea.	End Section For 711 mm x 508 mm * CSPA – 1.63 mm Thickness (60211-0910) Ea.	End Section For 889 mm x 610 mm * CSPA – 1.63 mm Thickness (60211-1010) Ea.	End Section For 1067 mm x 737 mm * CSPA – 1.63 mm Thickness (60211-1110) Ea.
0+510.000	1–610 mm x 24.41 m CSPC	90	24.41					1				
0+619.000	2–1067 mm x 737 mm 22.73 m CSPA	90					45.46					2
1+117.900 Lt.	1–610 mm x 21.63 m CSPC–Under Turnout	N/A	21.63					2				
1+270.000	1–762 mm x 24.05 m CSPC	90		24.05					1			
1+773.800	1–889 mm x 610 mm x 39.79 m CSPA	56				39.79					1	
2+370.800 Rt.	3–711 mm x 508 mm x 20.75 m CSPA–Under Turnout	N/A			62.25					6		
2+747.370 Rt.	2–711 mm x 508 mm x 23.66 m CSPA–Under Turnout	N/A			47.32					4		
2+999.200 Rt.	1–711 mm x 508 mm x 13.07 m CSPA–Under Turnout	N/A			13.07					2		
	TOTAL		46.04	24.05	122.64	39.79	45.46	3	1	12	1	2

* = Install End Section on Inlet Side Only, Except @ Turnout Locations

NOTE: SEE SHEET 57 FOR GENERAL NOTES.

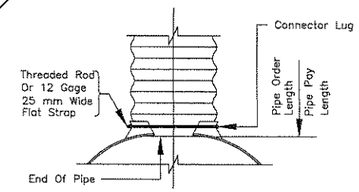

TYPE NO. 1

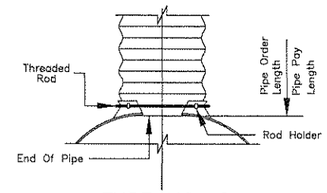

TYPE NO. 2

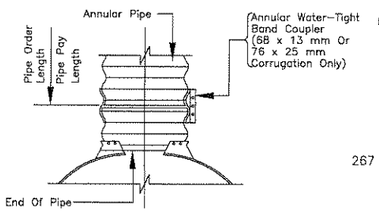

TYPE NO. 3

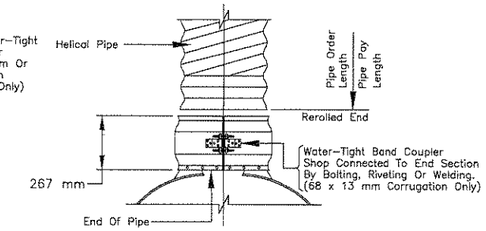

TYPE NO. 5
(See Note No.9)

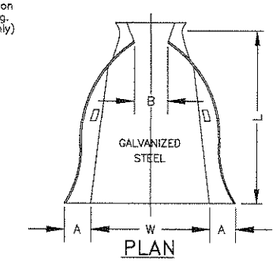

PLAN

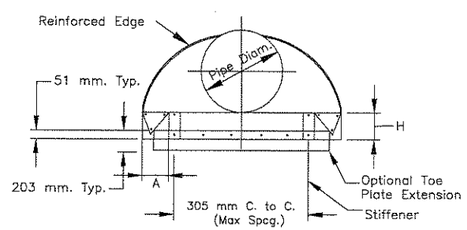

ELEVATION

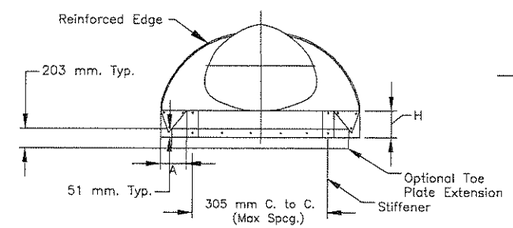

ELEVATION

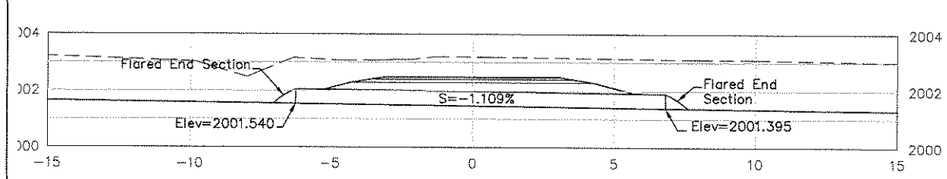

Sta 2+999.200, 10.165 m Rt.
1–711 mm x 508 mm x 13.07 m CSPA
Under Turnout

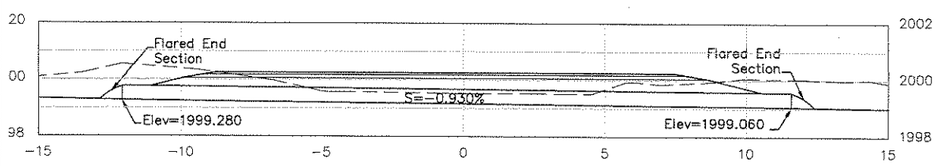

Sta 2+747.370, 10.165 m Rt.
2–711 mm x 508 mm x 23.66 m CSPA
Under Turnout

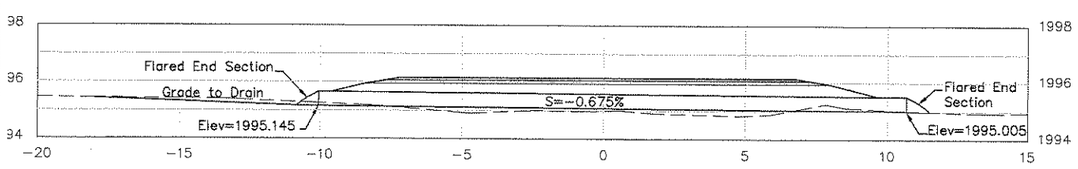

Sta 2+370.800, 11.805 m Rt.
3–711 mm x 508 mm x 20.75 m CSPA
Under Turnout

ROUND PIPE END SECTION

Pipe Diam (mm)	Thickness (mm)	DIMENSIONS A (25 mm±)	B (Max.)	H (25 mm±)	F (mm)	L (38 mm±)	W (51 mm±)	Approx. Slope	BODY
610	1.6	254	330	152	1168	1041	1219	2 1/2	1 Pc
762	2	311	318	203	1397	1229	1448	2 1/2	2 Pc
914	2	368	305	229	1778	1524	1829	2 1/2	2 Pc
1067	2.8	432	279	267	2082	1753	2134	2 1/2	2 Pc
1219	2.8	470	737	305	2235	2007	2286	2 1/4	3 Pc
1372	2.8	470	762	305	2540	2134	2591	2	3 Pc
1524	2.8 / 3	457	914	305	2845	2235	2896	1 3/4	3 Pc
1676	2.8 / 3	457	914	305	2997	2210	3048	1 1/2	3 Pc
1829	2.8 / 3	457	1118	305	3048	2248	3048	1 1/3	3 Pc
1981	2.8 / 3	457	168	305	3302	2223	3505	1 1/4	4 Pc
2134	2.8 / 3	457	1219	305	3454	2223	3658	1 1/6	4 Pc

ARCH PIPE END SECTION

SPAN* *68 mm x 13 mm	RISE *76 mm x 25 mm	Thickness (mm)	DIMENSIONS A (25 mm±)	B (Max.)	H (25 mm±)	F (mm)	L (38 mm±)	W (51 mm±)	Approx. Slope	BODY
711	508	1.6	203	406	152	711	813	1219	2 1/2	1 Pc
889	610	2.0	254	406	152	863	991	1524	2 1/2	1 Pc
1067	737	2.0	305	305	191	1016	168	1905	2 1/2	2 Pc
1245	838	2.8	343	508	229	1168	1346	2134	2 1/2	2 Pc
1448	965	2.8	470	660	305	1473	1575	2286	2 1/4	3 Pc
1626	1092	2.8	457	737	305	1854	1753	2591	2 1/4	3 Pc
1803	1194	2.8 / 3.5	470	914	305	2540	1956	2896	2 1/4	3 Pc
1854	1397	2.8	457	914	305	3149	1956	3200	2.0	3 Pc
2057	1499	2.8	457	991	305	3454	1956	3505	2.0	3 Pc
2210	1600	2.8	457	991	305	3454	1956	3505	2.00	3 Pc

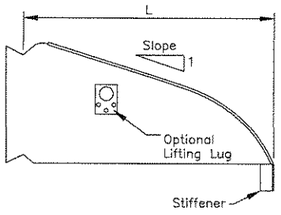

TYPICAL CROSS SECTION

UNITED STATES
DEPARTMENT OF THE INTERIOR
BUREAU OF INDIAN AFFAIRS
NAVAJO REGION OFFICE * DIVISION OF TRANSPORTATION

CULVERT DETAILS

Designed by: RDL
Drawn by: RDL, cdh Date: 08/13/09
Revised by: Date:
File Name: N46_Culverts