CUTTER LATERAL REACH 21
WATER TREATMENT PLANT
AND ASSOCIATED ITEMS
NAVAJO-GALLUP WATER SUPPLY PROJECT
NEW MEXICO

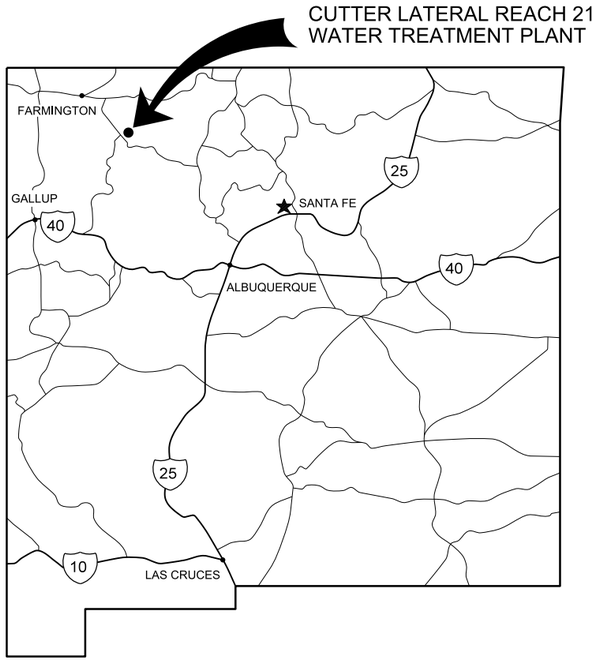

N

LOCATION MAP
NTS

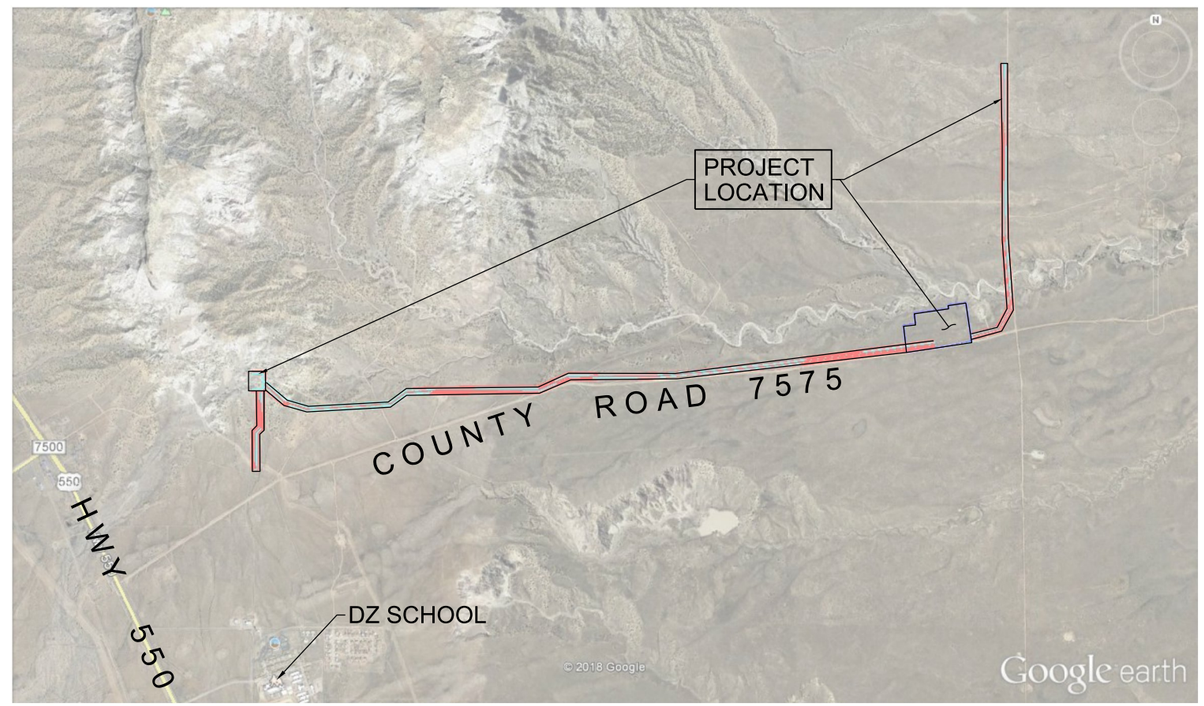

N

VICINITY MAP
NTS

ISSUED FOR CONSTRUCTION
BALANCE OF PLANT

ch2m

FEBRUARY 13, 2019

RECLAMATION
Managing Water in the West

ch2m

VERIFY SCALE
BAR IS ONE INCH ON ORIGINAL DRAWING.
0 1"

ALWAYS THINK SAFETY

U.S. DEPARTMENT OF THE INTERIOR
BUREAU OF RECLAMATION
NAVAJO-GALLUP WATER SUPPLY PROJECT
NEW MEXICO

CUTTER LATERAL - REACH 21

WATER TREATMENT PLANT

NO.	DATE	REVISION	BY	APV'D
1	02/13/2019	ISSUED FOR CONSTRUCTION	MK	JP
0	9/13/2018	ROUGH GRADING/EARLY PIPING WORK PACKAGE	MK	JP

M KRUMHOLZ
DESIGNED
F IAGLA
DRAWN
J PETERSON
CHECKED
J PETERSON
TECH. APPR.
J PETERSON
APPROVED
ADMIN APPROVAL -

FARMINGTON, NM FEBRUARY 2019

GENERAL

COVER SHEET

000-G-0001

SHEET 1 OF 405

DATE PLOTTED 2/11/2019
TIME PLOTTED 11:19:57 PM

CAD SYSTEM
CAD FILENAME 000-G-0001_682853.dgn

INDEX OF DRAWINGS 1

SHEET NO.	CH2M DRAWING NO.	USBR DRAWING NO.	SHEET TITLE
	000 - GENERAL		
1	000-G-0001		COVER SHEET
2	000-G-0002		INDEX OF DRAWINGS 1
3	000-G-0003		INDEX OF DRAWINGS 2
4	000-G-0004		ABBREVIATIONS
5	000-G-0005		ABBREVIATIONS AND LEGEND
6	000-G-0101		CIVIL AND YARD PIPING LEGEND
7	000-G-0201		ARCHITECTURAL NOTES, SYMBOLS, LEGENDS AND WALL TYPES
8	000-G-0202		CODE DATA AND LIFE SAFETY PLAN OPS/PROCESS
9	000-G-0203		CODE DATA AND LIFE SAFETY PLAN TREATED WATER PS
10	000-G-0204		CODE DATA AND LIFE SAFETY PLAN CHEMICAL FACILITY
11	000-G-0301		STRUCTURAL NOTES 1
12	000-G-0302		STRUCTURAL NOTES 2
13	000-G-0303		STRUCTURAL SPECIAL INSPECTION NOTES 1
14	000-G-0304		STRUCTURAL SPECIAL INSPECTION NOTES 2
15	000-G-0305		STRUCTURAL SPECIAL INSPECTION NOTES 3
16	000-G-0306		STRUCTURAL SPECIAL INSPECTION NOTES 4
17	000-G-0401		PROCESS MECHANICAL LEGEND
18	000-G-0501		PLUMBING LEGEND 1
19	000-G-0502		PLUMBING LEGEND 2
20	000-G-0503		HVAC LEGEND
21	000-G-0504		HVAC EQUIPMENT SCHEDULES 1
22	000-G-0505		HVAC EQUIPMENT SCHEDULES 2
23	000-G-0601		ELECTRICAL LEGEND 1
24	000-G-0602		ELECTRICAL LEGEND 2
25	000-G-0603		ELECTRICAL LEGEND 3
26	000-G-0604		SECURITY LEGEND
27	000-G-0605		LUMINAIRE SCHEDULE
28	000-G-0606		MOTOR CONTROL DIAGRAM
29	000-G-0607		MOTOR CONTROL DIAGRAM
30	000-G-0608		MOTOR CONTROL DIAGRAM
31	000-G-0701		INSTRUMENTATION AND CONTROLS LEGEND 1
32	000-G-0702		INSTRUMENTATION AND CONTROLS LEGEND 2
33	000-G-0801		PROCESS FLOW DIAGRAM AND SAMPLING PLAN
34	000-G-0802		MASS BALANCE SUMMARY
35	000-G-0803		PROCESS DESIGN SUMMARY
36	000-G-0804		HYDRAULIC PROFILE MAIN PROCESS
37	000-G-0805		HYDRAULIC PROFILE SOLIDS COLLECTION
	051 - SITE CIVIL		
38	051-C-1000		KEYMAP
39	051-C-2000		OVERALL SITE PLAN
40	051-C-2001		GRADING PLAN - 1
41	051-C-2002		GRADING PLAN - 2
42	051-C-2003		GRADING PLAN - 3
43	051-C-2004		GRADING PLAN - 4
44	051-C-2005		GRADING PLAN - 5
45	051-C-2006		GRADING PLAN - 6
46	051-C-2007		GRADING PLAN - 7
47	051-C-2101		SITE CULVERT PROFILES
48	051-C-2102		SITE CULVERT PROFILES
49	051-C-2200		GEOMETRIC DESIGN PLAN
50	051-C-2201		GEOMETRIC PLAN - 1
51	051-C-2202		GEOMETRIC PLAN - 2
52	051-C-2203		GEOMETRIC PLAN - 3
53	051-C-2204		GEOMETRIC PLAN - 4
54	051-C-2205		GEOMETRIC PLAN - 5
55	051-C-2206		GEOMETRIC PLAN - 6
56	051-C-2207		GEOMETRIC PLAN - 7
57	051-C-2300		DETAILS
58	051-C-2301		DETAILS
59	051-C-2302		DETAILS
60	051-C-2400		TEMPORARY EROSION CONTROL PLAN
61	051-C-3001		PLANT ROAD PROFILES
62	051-C-3002		PLANT ROAD PROFILES
63	051-C-4001		OVERALL SITE SECTIONS
64	051-C-4002		OVERALL SITE SECTIONS
65	051-C-4003		SITE BERM PROFILE
66	051-S-2001		HEAD WALL PLAN AND SECTIONS
67	051-S-2002		RADIO TOWER PLAN SECTION
	052 - YARD PIPING		
68	052-C-2000		KEYMAP
69	052-C-2001		SITE PLAN - 1
70	052-C-2002		SITE PLAN - 2
71	052-C-2003		SITE PLAN - 3
72	052-C-2004		SITE PLAN - 4
73	052-C-2005		SITE PLAN - 5
74	052-C-2006		SITE PLAN - 6
75	052-C-2007		SITE PLAN - 7
76	052-C-4001		ENLARGED SITE PLAN
77	052-C-5000		DETAILS
78	052-S-2001		SEPTIC TANK PLANS AND SECTION
	070 - SITE ELECTRICAL		
79	070-E-2001		DUCTBANK AND LIGHTING LAYOUT
80	070-E-2002		DUCTBANK AND LIGHTING LAYOUT
81	070-E-2003		DUCTBANK AND LIGHTING LAYOUT
82	070-E-2004		DUCTBANK AND LIGHTING LAYOUT
83	070-E-2005		DUCTBANK AND LIGHTING LAYOUT
84	070-E-2006		DUCTBANK AND LIGHTING LAYOUT
85	070-E-3001		DUCTBANK SECTIONS
86	070-E-3002		DUCTBANK SECTIONS
87	070-E-3003		DUCTBANK SECTIONS
88	070-E-6001		ONE-LINE DIAGRAM MAIN POWER SUBSTATION
89	070-E-6002		ONE-LINE DIAGRAM MCC-300-01 1 OF 2
90	070-E-6003		ONE-LINE DIAGRAM ELECTRICAL FACILITY 2 OF 2
91	070-E-6004		ONE-LINE DIAGRAM CHEMICAL FACILITY
92	070-E-6005		ONE-LINE DIAGRAM MCC-400-01
	080 - INSTRUMENTATION & CONTROLS		
93	080-I-0001		RAPID MIX SULFURIC ACID AND FERRIC CHLORIDE P&ID
94	080-I-0002		FLOCCULATION AND SEDIMENTATION BASIN 1 P&ID
95	080-I-0003		FLOCCULATION AND SEDIMENTATION BASIN 2 P&ID
96	080-I-0004		FILTER OVERVIEW P&ID
97	080-I-0005		FILTER 1 P&ID
98	080-I-0006		FILTER 2 P&ID
99	080-I-0007		FILTER 3 P&ID
100	080-I-0008		FILTER 4 P&ID
101	080-I-0009		FILTER AIR SCOUR BLOWERS P&ID
102	080-I-0010		FILTER SEAL WEIR P&ID
103	080-I-0011		GAC SUPPLY PUMPS P&ID
104	080-I-0012		GAC ADSORBER P&ID
105	080-I-0013		POTABLE WATER AND FIRE SUPRESSION PUMP STATION P&ID
106	080-I-0014		TREATED WATER PS AND SURGE TANK P&ID
107	080-I-0015		SURGE TANK P&ID
108	080-I-0016		OFF SPEC & BWW PONDS BACKWASH POND P&ID
109	080-I-0017		DECANT PUMP STATION P&ID
110	080-I-0018		SOLIDS DRYING PONDS P&ID
111	080-I-0019		SULFURIC ACID STORAGE AND FEED P&ID
112	080-I-0020		FERRIC CHLORIDE STORAGE AND FEED P&ID
113	080-I-0021		SODIUM HYPOCHLORITE STORAGE AND FEED P&ID
114	080-I-0022		SODIUM HYDROXIDE STORAGE AND FEED P&ID
115	080-I-0023		NONIONIC/CATIONIC POLYMER STORAGE AND FEED P&ID
116	080-I-0024		ANIONIC POLYMER STORAGE P&ID
117	080-I-0025		ANIONIC POLYMER FEED PUMPS 1-2 P&ID
118	080-I-0026		ANIONIC POLYMER FEED PUMPS 3-6 P&ID
119	080-I-0027		ORTHOPOLYPHOSPHATE STORAGE AND FEED P&ID
120	080-I-0028		CARBON DIOXIDE SYSTEM P&ID
121	080-I-0029		CHEMICAL FILL AND TRUCK SPILL CONTAINMENT P&ID
122	080-I-2000		PLANT CONTROL SYTEM NETWORK BLOCK DIAGRAM CONCEPTS
123	080-I-2001		PLANT CONTROL SYSTEM NETWORK BLOCK DIAGRAM 1
124	080-I-2002		PLANT CONTROL SYSTEM NETWORK BLOCK DIAGRAM 2
125	080-I-2003		PLANT CONTROL SYSTEM NETWORK BLOCK DIAGRAM 3
126	080-I-2004		PLANT CONTROL SYSTEM NETWORK BLOCK DIAGRAM 4
127	080-I-2005		PLANT CONTROL SYSTEM NETWORK BLOCK DIAGRAM 5
128	080-I-2006		PLANT CONTROL SYSTEM NETWORK BLOCK DIAGRAM 6
129	080-I-2007		FIBER BACKBONE BLOCK DIAGRAM
130	080-I-2008		CONCEPTUAL NETWORK DIAGRAM
131	080-I-2009		REACH 21 TELEMETRY POINTS
132	080-I-2010		REACH 22B TELEMETRY
133	080-I-3000		PLC PANEL CONCEPT TYPICAL FREE-STANDING EXTERNAL ELEVATION
134	080-I-3001		PLC PANEL CONCEPT TYPICAL FREE-STANDING INTERNAL ELEVATION
135	080-I-3002		PLC PANEL CONCEPT TYPICAL FREE-STANDING POWER WIRING
136	080-I-3003		PLC PANEL CONCEPT DATA CONCENTRATION LCP-300-02
137	080-I-3004		SAMPLE PLC DI WIRING DIAGRAM
138	080-I-3005		SAMPLE PLC DO WIRING DIAGRAM
139	080-I-3006		SAMPLE PLC AI WIRING DIAGRAM
140	080-I-3007		SAMPLE PLC AO WIRING DIAGRAM
141	080-I-3008		TYPICAL RADIO SYSTEM CONCEPTS
142	080-I-3009		RADIO ANTENNA TOWER DETAIL
143	080-I-3010		RADIO EQUIPMENT INSTALLATION DETAILS
	080 - INSTRUMENTATION & CONTROLS (CONTINUED)		
144	080-I-3011		NETWORK INTERFACE PANEL OPERATIONS BUILDING LAYOUT CONCEPTS
145	080-I-3012		NETWORK INTERFACE PANEL NIP-360-01 AND NIP-380-01 TYPICAL ENCLOSED PANEL
146	080-I-3013		ANALYZER PANEL ACP-280-03
147	080-I-3014		ANALYZER PANEL ACP-280-04
148	080-I-3015		ANALYZER PANEL ACP-900-01
149	080-I-3016		ANALYZER PANEL ACP-300-02 AND ACP-300-03 ACP-300-04 AND ACP-300-05
150	080-I-3017		ANALYZER PANEL ACP-420-01
151	080-I-3018		ANALYZER PANEL ACP-360-01
152	080-I-3019		ANALYZER PANEL ACP-280-01
153	080-I-3020		ANALYZER PANEL ACP-300-01
154	080-I-3021		ANALYZER PANEL ACP-300-06 AND ACP-300-07
155	080-I-3022		ANALYZER PANEL ACP-360-02
156	080-I-3023		ANALYZER PANEL ACP-460-01
157	080-I-3024		PANEL CONCEPT TRUCK UNLOADING PANEL
	090 - SECURITY		
158	090-E-2000		BLOCK DIAGRAM
159	090-E-2001		OVERALL SITE PLAN
160	090-E-2300		OPERATIONS AND PROCESS FACILITY FLOOR PLAN
161	090-E-2360		TREATED WATER PS FLOOR PLAN
162	090-E-2380		CHEMICAL FACILITY FLOOR PLAN
163	090-E-2400		MOTOR CONTROL CENTER
	280 - FLOCCULATION SEDIMENTATION		
164	280-S-2001		FOUNDATION PLAN
165	280-S-2002		TOP PLAN
166	280-S-3001		SECTION
167	280-S-3002		SECTION
168	280-S-3003		SECTION
169	280-S-3004		SECTIONS
170	280-S-4001		ENLARGED PLAN SECTIONS AND DETAILS
171	280-D-2001		PLAN
172	280-D-3001		SECTION
173	280-D-5001		DETAILS
174	280-E-2001		UPPER PLAN
175	280-E-6001		PANEL SCHEDULES
176	280-E-6401		CABLE BLOCK DIAGRAMS
177	280-E-6402		CABLE BLOCK DIAGRAMS
178	280-E-6403		CABLE BLOCK DIAGRAMS
179	280-E-6404		CABLE BLOCK DIAGRAMS
180	280-E-6405		CABLE BLOCK DIAGRAMS
181	280-E-6406		CABLE BLOCK DIAGRAMS
	300 - OPERATIONS AND PROCESS FACILITY		
182	300-A-2001		FIRST LEVEL PLAN
183	300-A-2002		SECOND LEVEL PLAN
184	300-A-2003		ROOF PLAN
185	300-A-3001		EXTERIOR ELEVATIONS
186	300-A-3002		EXTERIOR ELEVATIONS
187	300-A-3003		SECTION
188	300-A-4001		ENLARGED PLAN
189	300-A-4002		ENLARGED REFLECTED CEILING PLAN
190	300-A-4003		LABORATORY PLAN
191	300-A-4004		LABORATORY INTERIOR ELEVATIONS
192	300-A-4005		INTERIOR ELEVATIONS
193	300-A-6001		SCHEDULES
194	300-A-6002		SCHEDULES
195	300-S-2001		FOUNDATION PLAN
196	300-S-2002		FIRST LEVEL PLAN
197	300-S-2003		SECOND LEVEL PLAN
198	300-S-2004		ROOF FRAMING PLAN
199	300-S-3001		SECTION
200	300-S-3002		SECTION
201	300-S-3003		SECTION
202	300-S-3004		SECTIONS
203	300-S-4001		ENLARGED PLAN
204	300-S-5001		DETAILS

RECLAMATION
Managing Water in the West

ch2m

VERIFY SCALE
BAR IS ONE INCH ON ORIGINAL DRAWING.
0 1"

ALWAYS THINK SAFETY

U.S. DEPARTMENT OF THE INTERIOR
BUREAU OF RECLAMATION
NAVAJO-GALLUP WATER SUPPLY PROJECT
NEW MEXICO

CUTTER LATERAL - REACH 21

WATER TREATMENT PLANT

NO.	DATE	REVISION	BY	APVD
1	02/13/2019	ISSUED FOR CONSTRUCTION	MK	JP
0	9/13/2018	ROUGH GRADING/EARLY PIPING WORK PACKAGE	MK	JP

M KRUMHOLZ
DESIGNED
F JAGLA
DRAWN
J PETERSON
CHECKED
M KRUMHOLZ
TECH. APPR.
J PETERSON
APPROVED
ADMIN APPROVAL -

FARMINGTON, NM FEBRUARY 2019

GENERAL

INDEX OF DRAWINGS 1

000-G-0002

SHEET 2 OF 405

DATE PLOTTED 2/11/2019
TIME PLOTTED 1:19:55 PM

CAD SYSTEM
CAD FILENAME 000-G-0002_682853.dgn

INDEX OF DRAWINGS 2

SHEET NO.	CH2M DRAWING NO.	USBR DRAWING NO.	SHEET TITLE
	300 - OPERATIONS AND PROCESS FACILITY (CONTINUED)		
205	300-D-2001		OVERALL PLAN
206	300-D-3001		SECTIONS
207	300-D-3002		SECTIONS
208	300-D-4001		ENLARGED PLAN
209	300-D-4002		ENLARGED PLAN
210	300-D-4003		ENLARGED PLAN
211	300-D-4004		ENLARGED PLAN AND SECTION
212	300-D-4005		ENLARGED PLAN AND SECTIONS
213	300-D-5001		DETAILS
214	300-M-2001		OVERALL PLAN
215	300-M-3001		SECTIONS
216	300-M-3002		SECTION
217	300-M-6001		AIRFLOW AND CONTROL SCHEMATIC
218	300-M-6002		AIRFLOW AND CONTROL SCHEMATIC
219	300-P-2001		UNDER FLOOR PLAN
220	300-P-2002		FIRST LEVEL PLAN
221	300-P-2003		SECOND LEVEL PLAN
222	300-P-4001		ENLARGED PLANS
223	300-P-5001		DETAILS
224	300-P-5002		SANITARY/VENT ISOMETRICS
225	300-P-5003		WATER PIPING ISOMETRICS
226	300-E-2001		FIRST LEVEL POWER PLAN
227	300-E-2003		FIRST LEVEL FACILITY PLAN 1
228	300-E-2004		FIRST LEVEL FACILITY PLAN 2
229	300-E-6001		PANEL SCHEDULES
230	300-E-6401		CABLE BLOCK DIAGRAMS
231	300-E-6402		CABLE BLOCK DIAGRAMS
232	300-E-6403		CABLE BLOCK DIAGRAMS
233	300-E-6404		CABLE BLOCK DIAGRAMS
234	300-E-6405		CABLE BLOCK DIAGRAMS
235	300-E-6406		CABLE BLOCK DIAGRAMS
	360 - TREATED WATER PUMP STATION		
236	360-A-2001		FIRST LEVEL PLAN
237	360-A-2002		ROOF PLAN
238	360-A-3001		EXTERIOR ELEVATIONS
239	360-A-3002		SECTION
240	360-A-6001		SCHEDULES
241	360-A-6002		SCHEDULES
242	360-S-2001		FOUNDATION PLAN
243	360-S-2002		GROUND LEVEL PLAN
244	360-S-2003		ROOF FRAMING PLAN
245	360-S-3001		SECTION
246	360-S-3002		SECTIONS
247	360-S-3003		SECTIONS
248	360-D-2001		LOWER LEVEL PLAN
249	360-D-2002		GROUND LEVEL PLAN
250	360-D-3001		SECTIONS
251	360-D-3001		SECTIONS
252	360-D-3002		SECTION
253	360-D-3003		SECTIONS
254	360-D-5001		DETAILS
255	360-M-2001		PLAN
256	360-M-6001		AIRFLOW AND CONTROL SCHEMATIC
257	360-F-2001		PLAN
258	360-P-2001		UNDER FLOOR PLAN
259	360-P-2002		GROUND LEVEL PLAN
260	360-P-5001		DETAILS
261	360-P-5002		ISOMETRIC
262	360-E-2001		GROUND LEVEL PLAN
263	360-E-2002		FACILITY PLAN
264	360-E-6001		PANEL SCHEDULES
265	360-E-6401		CABLE BLOCK DIAGRAMS
266	360-E-6402		CABLE BLOCK DIAGRAMS
267	360-E-6403		CABLE BLOCK DIAGRAMS
268	360-E-6404		CABLE BLOCK DIAGRAMS
269	360-E-6405		CABLE BLOCK DIAGRAMS
270	360-E-6406		CABLE BLOCK DIAGRAMS
	380 - CHEMICAL FACILITY		
271	380-A-2001		FLOOR PLAN
272	380-A-2002		ROOF PLAN
273	380-A-3001		EXTERIOR ELEVATIONS
274	380-A-3002		SECTIONS
275	380-A-6001		SCHEDULES
276	380-A-6002		SCHEDULES
277	380-S-2001		FOUNDATION PLAN
278	380-S-2002		ROOF FRAMING PLAN
279	380-S-3001		SECTION
280	380-S-3002		SECTION
281	380-S-3003		SECTION
282	380-S-3004		SECTIONS
283	380-S-3005		SECTIONS
	380 - CHEMICAL FACILITY (CONTINUED)		
284	380-D-2000		OVERALL PLAN
285	380-D-2001		ORTHOPOLYPHOSPHATE ENLARGED PLAN
286	380-D-2002		POLYMER ENLARGED PLAN
287	380-D-2003		SODIUM ENLARGED PLAN
288	380-D-2004		SULFURIC ACID AND FERRIC CHLORIDE ENLARGED PLAN
289	380-D-2005		CHEMICAL PULL BOX ENLARGED PLAN & SECTIONS
290	380-D-3001		SECTION
291	380-D-3002		SECTION
292	380-D-3003		SECTION
293	380-D-3004		SECTION
294	380-D-3005		SECTION
295	380-D-3006		SECTION
296	380-D-3007		SECTIONS
297	380-D-3008		SECTION
298	380-D-3009		SECTION
299	380-D-3010		SECTION
300	380-D-5001		DETAILS
301	380-D-5002		DETAILS
302	380-D-5003		DETAILS
303	380-D-5004		DETAILS
304	380-M-2001		OVERALL PLAN
305	380-M-3001		SECTION
306	380-M-6001		AIRFLOW AND CONTROL SCHEMATIC
307	380-F-2001		FIRE SPRINKLER PLAN
308	380-F-5001		DETAIL AND SCHEDULES
309	380-P-2001		UNDER FLOOR PLAN
310	380-P-2002		GROUND LEVEL PLAN
311	380-P-5001		DETAILS
312	380-P-5002		ISOMETRIC
313	380-E-2001		POWER PLAN
314	380-E-2002		FACILITY PLAN
315	380-E-6001		PANEL SCHEDULES
316	380-E-6401		CABLE BLOCK DIAGRAMS
317	380-E-6402		CABLE BLOCK DIAGRAMS
318	380-E-6403		CABLE BLOCK DIAGRAMS
319	380-E-6404		CABLE BLOCK DIAGRAMS
320	380-E-6405		CABLE BLOCK DIAGRAMS
	400 - ELECTRICAL FACILITY		
321	400-S-2001		FOUNDATION PLAN AND SECTION
322	400-E-2001		MOTOR CONTROL CENTER
323	400-E-6001		PANEL SCHEDULES
324	400-E-6401		CABLE AND RACEWAY SCHEDULE
	420 - OFF SPEC AND BWW PONDS		
325	420-S-2001		INFLUENT BOX PLANS AND SECTIONS
326	420-S-2002		LR DISTRIBUTION HEADER PLAN AND SECTIONS
327	420-S-2003		SLUDGE COLLECTOR PLAN
328	420-S-2004		PD COLLECTION BOX PLANS AND SECTION
329	420-S-3001		SECTION
330	420-S-3002		SECTIONS
331	420-S-4001		ENLARGED PLAN & DETAIL
332	420-D-2001		INFLUENT BOX PLAN AND SECTION
333	420-D-2002		LR DISTRIBUTION HEADER PLAN AND SECTIONS
334	420-D-2003		SLUDGE COLLECTOR PLAN
335	420-D-2004		PD COLLECTION BOX PLAN
336	420-D-3001		SLUDGE COLLECTOR SECTIONS
337	420-E-2001		INFLUENT BOX FACILITY PLAN
338	420-E-2002		SLUDGE COLLECTOR PLAN
339	420-E-6401		CABLE BLOCK DIAGRAMS
340	420-E-6402		CABLE BLOCK DIAGRAMS
	440 - SOLID DRYING PONDS		
341	440-S-2001		PLANS AND SECTIONS
342	440-D-2001		PLAN AND SECTION
343	440-E-2001		PLANS
	460 - DECANT WATER PUMP STATION		
344	460-S-2001		PLANS
345	460-S-3001		SECTIONS
346	460-D-2001		PLANS
347	460-D-3001		SECTIONS
348	460-D-3002		SECTION
349	460-E-2001		PLAN
350	460-E-6001		PANEL SCHEDULES
351	460-E-6401		CABLE BLOCK DIAGRAMS
352	460-E-6402		CABLE BLOCK DIAGRAMS
	800 - PIPELINE/TANK GENERAL SHEETS		
353	800-G-0001		GENERAL NOTES & LEGEND
354	800-G-0002		PROJECT SITE PLAN AND DRAWING INDEX
355	800-G-0003		SURVEY CONTROL PLAN (1 OF 2)
356	800-G-0004		SURVEY CONTROL PLAN (2 OF 2)
357	800-G-0005		HYDRAULIC PROFILE
	850 - WATER PIPELINE		
358	850-C-2001		PLAN & PROFILE STA -0+21.4 TO 24+00
359	850-C-2002		PLAN & PROFILE STA 24+00 TO 48+00
360	850-C-2003		PLAN & PROFILE STA 48+00 TO 58+00
361	850-C-2004		PLAN & PROFILE STA 58+00 TO 82+00
362	850-C-2005		PLAN & PROFILE STA 82+00 TO 106+00
363	850-C-2006		PLAN & PROFILE STA 106+00 TO 127+00
364	850-C-2007		PLAN & PROFILE STA 127+00 TO 151+00
365	850-C-2008		PLAN & PROFILE STA 151+00 TO 173+00
366	850-C-2009		PLAN & PROFILE STA 173+00 TO 188+00
367	850-C-2010		PLAN & PROFILE STA 188+00 TO 199+76.3
368	850-C-3000		REACH 22 TANK SITE NO. 2 TIE IN
369	850-C-3001		ENMP PHASE 3 TIE IN
370	850-C-3002		DZ TANK SITE PIPING PLAN UPDATES
371	850-C-3301		PIPE TRENCH DETAILS
372	850-C-3302		MISCELLANEOUS CONSTRUCTION DETAILS
373	850-C-3303		THRUST BLOCK DETAILS
374	850-C-3304		WALL ANCHOR BLOCK AND PIPE TRANSITION DETAILS
375	850-C-3305		GAS LINE CROSSING DETAILS
376	850-C-3306		ROAD CROSSING DETAILS
377	850-C-3307		PIPELINE BUTTERFLY VALVE DETAILS
378	850-C-3308		SITE BUTTERFLY & GATE VALVE DETAILS
379	850-C-3309		3-INCH VACUUM RELIEFT WITH 2-INCH AIR RELEASE VALVE DETAIL
380	850-C-3310		4-INCH FLUSH VALVE WITH RISER DETAIL
381	850-C-3311		4-INCH FLUSH VALVE WITH ABOVE GRADE DISCHARGE DETAIL
382	850-C-3312		WASH CROSSING STA 42+02 PIPELINE HDD DETAIL
383	850-C-3313		WASH CROSSING STA 95+37 PIPELINE HDD DETAIL
384	850-C-3314		WASH CROSSING STA 129+92 PIPELINE HDD DETAIL
	900 - TANK 3 SUPPORT FACILITY		
385	900-C-2000		ACCESS ROAD PLAN AND PROFILE - 1
386	900-C-2001		ACCESS ROAD PLAN AND PROFILE - 2
387	900-C-2300		DETAILS
388	900-C-3000		REACH 21 TANK SITE NO. 3 SITE PLAN
389	900-C-3001		REACH 21 TANK SITE NO. 3 GRADING PLAN
390	900-C-3002		REACH 21 TANK SITE NO. 3 STORMWATER BMP PLAN
391	900-C-3003		REACH 21 TANK SITE NO. 3 PIPING PLAN
392	900-C-3004		REACH 21 TANK SITE NO. 3 SITE VALVE NUMBERS
393	900-C-3301		TANK DETAILS (1 OF 2)
394	900-C-3302		TANK DETAILS (2 OF 2)
395	900-C-3303		TYPICAL STORAGE TANK DETAILS (1 OF 2)
396	900-C-3304		TYPICAL STORAGE TANK DETAILS (2 OF 2)
397	900-C-3305		STANDARD FENCE DETAILS
398	900-C-3306		EROSION CONTROL DETAILS (1 OF 2)
399	900-C-3307		EROSION CONTROL DETAILS (2 OF 2) AND R-O-W GRADING
400	900-C-3308		TRAFFIC CONTROL (GRAVEL AND DIRT ROAD)
401	900-D-2001		PLAN
402	900-E-2001		PLAN
403	900-E-6401		CABLE AND RACEWAY SCHEDULE
404	900-I-0001		FINISHED WATER P&ID
405	900-I-0002		TYPICAL ANALYZER PANEL CL2

RECLAMATION
Managing Water in the West

ch2m

VERIFY SCALE
BAR IS ONE INCH ON ORIGINAL DRAWING.
0 1"

ALWAYS THINK SAFETY

U.S. DEPARTMENT OF THE INTERIOR
BUREAU OF RECLAMATION
NAVAJO-GALLUP WATER SUPPLY PROJECT
NEW MEXICO

CUTTER LATERAL - REACH 21

WATER TREATMENT PLANT

NO.	DATE	REVISION	BY	APV'D
0	02/13/2019	ISSUED FOR CONSTRUCTION	MK	JP

M KRUMHOLZ
DESIGNED
F JAGLA
DRAWN
J PETERSON
CHECKED
M KRUMHOLZ
TECH. APPR.
J PETERSON
APPROVED
ADMIN APPROVAL -

FARMINGTON, NM FEBRUARY 2019

GENERAL

INDEX OF DRAWINGS 2

000-G-0003

SHEET 3 OF 405

DATE PLOTTED 2/11/2019
TIME PLOTTED 1:19:52 PM

CAD SYSTEM
CAD FILENAME 000-G-0003_882853.dgn

ABBREVIATIONS

A	AMMETER, AMPERES, AWNINGS
AB	ANCHOR BOLT, ABOVE AERATION BASIN
ABI	AERATION BASIN INFLUENT
ABDN	ABANDON
ABS	ABSORBANCE
AC	ACOUSTICAL, ACOUSTICAL CEILING
AC	ALTERNATING CURRENT, ASPHALTIC CONCRETE, ASBESTOS CONCRETE
ACFL	ACCESS FLOORING
ACI	AMERICAN CONCRETE INSTITUTE
ACMU	ACOUSTICAL CONCRETE MASONRY UNIT, ACOUSTICAL CMU
ACP	ACOUSTICAL PANELS
ACST	ACOUSTICAL
ACT	ACOUSTICAL TILE
AD	AREA DRAIN
ADDL	ADDITIONAL
ADJ	ADJACENT
ADW	DRY WEATHER AVERAGE
AFD	ADJUSTABLE FREQUENCY DRIVE
AFF	ABOVE FINISHED FLOOR
AFG	ABOVE FINISHED GRADE
AG	ACOUSTICAL, ACOUSTICAL GLASS
AGGR	AGGREGATE
AHF	ACTIVE HARMONIC FILTER
AHR	ANCHOR
AISC	AMERICAN INSTITUTE OF STEEL CONSTRUCTION
AJ	ADJUSTABLE
AL	ALUMINUM
ALKY	ALKALINITY
ALTN	ALTERNATE
AM	AUTO-MANUAL
AMRD	ACOUSTICAL METAL ROOF DECKING
ANDZ	ANODIZE
APPROX	APPROXIMATE
APVD	APPROVED
ARCH	ARCHITECTURAL
AR	ANALOG RELAY
AS	AS SELECTED
ATS	AUTOMATIC TRANSFER SWITCH
AUTO	AUTOMATIC
AUX	AUXILIARY
AVG	AVERAGE
AWW	WET WEATHER AVERAGE
@	AT
B	BELL
BAL	BALANCE
BCJ	BRICK CONTROL JOINT
BETW	BETWEEN
BF	BLIND FLANGE, BOTTOM FACE
BFV	BUTTERFLY VALVE
BL	BASELINE
BFP	BACKFLOW PREVENTER
BGS	BELOW GROUND SURFACE
BLDG	BUILDING
BLK	BLOCK
BM	BEAM, BENCHMARK
BO	BOTTOM OF
B.O.B.	BOTTOM OF BEAM
BOD	BOTTOM OF DUCT
BOP	BOTTOM OF PIPE
BOT	BOTTOM
BRG	BEARING
BRK	BRICK
BRKR	BREAKER
BSP	BLACK STEEL PIPE
BV	BALL VALVE, BLOCK VENT
BVC	BEGINNING OF VERTICAL CURVE
BYP	BYPASS
C	CONDUIT, CASEMENT
°C	DEGREE CELSIUS
C TO C	CENTER TO CENTER
CAB	CABINET
CB	CATCH BASIN, CIRCUIT BREAKER
CC	CENTER OF CIRCLE
CC	CONTROL CABLE
CCP	CENTRAL CONTROL PANEL
CCS	CENTRAL CONTROL SYSTEM
CDF	CONTROLLED DENSITY FILL
CE	CONSTRUCTION ENTRANCE
CFM	CUBIC FEET PER MINUTE
CFS	CUBIC FEET PER SECOND
CHEM	CHEMICAL
CHKD	CHECKERED
CI	CAST IRON
CIP	CAST IRON PIPE, CAST IN PLACE
CIP	CULVERT INLET PROTECTION
CISP	CAST IRON SOIL PIPE
CJ	CONSTRUCTION JOINT
CKT	CIRCUIT
CL	CENTERLINE
CLDI	CEMENT LINED DUCTILE IRON
CLSF	CONTROLLED LOW STRENGTH FILL
CLG	CEILING
CLR	CLEAR, CLEARANCE
CLSM	CONTROLLED LOW STRENGTH MATERIAL
CM	CONTROL MONUMENT
CMP	CENTRAL MONITORING PANEL
CMP	CORRUGATED METAL PIPE
CMU	CONCRETE MASONRY UNIT
CNTR	COUNTER
CO	CLEANOUT, CARBON MONOXIDE
COL	COLUMN, COLOR
CONC	CONCRETE, CONCENTRIC
COND	CONDENSATE
CONDTN	CONDITIONED
CONN	CONNECTION
CONSTR	CONSTRUCTION
CONT	CONTINUED, CONTINUOUS, CONTINUATION
CONTR	CONTRACTOR
COORD	COORDINATE
COP	COPPER
CP	CENTER PIVOT
CP-X	CONTROL PANEL NO. X
CPLG	COUPLING
CPRSR	COMPRESSOR
CPT	CONTROL POWER TRANFORMER, CARPET
CPVC	CHLORINATED PVC
CR	CONTROL RELAY
CRS	COLD ROLLED STEEL
CRS	CONSTRUCTION ROAD STABILIZATION
CST	CARBON STEEL PIPE
CT	CERAMIC TILE
CT	CURRENT TRANSFORMER
CTC	COMPUTER TERMINAL CABINET
CTMT	CONTAINMENT
CTR	CENTER
CTRD	CENTERED
CTSK	COUNTERSUNK
CU	CUBIC
CU FT	CUBIC FOOT
CU IN	CUBIC INCH
CUH	COPPER TUBING, HARD DRAWN
CV	CHECK VALVE
CWR	CABINET DOOR MOUNTED WASTE RECEPTACLE
CY, CU YD	CUBIC YARD
CWS	CLEAN WATER SERVICES
D	DEEP, DRAIN
d	PENNY NAIL SIZE
DA	DUAL ACTION
DAS	DATA ACQUISTION SYSTEM
DBA	DEFORMED BAR ANCHOR
DBL	DOUBLE
DC	DIRECT CURRENT
DEG	DEGREE
DEMO	DEMOLITION
DET	DETAIL
DF	DOUGLAS FIR, DRINKING FOUNTAIN
DDI	DROP INLET
DH	DOUBLE HUNG
DI	DUCTILE IRON
DIA	DIAMETER
DIAG	DIAGONAL
DIP	DUCTILE IRON PIPE
DIR	DIRECTION
DISCH	DISCHARGE
DN	DOWN
DO	DISSOLVED OXYGEN
DOL	DIRECT-ON-LINE
DP, DPNL	DISTRIBUTION PANEL
DR	DOOR
DS	DOWNSPOUT
DV/DT	DV/DT FILTER
DWG	DRAWING
DWL	DOWEL
△	DELTA
E	EAST, EMPTY
EA	EACH, EXHAUST AIR
EB, EBCT	EMPTY BED CONTACT TIME
ECC	ECCENTRIC
EE	EMERGENCY EYEWASH
EDF	EGG-SHAPED DIGESTER FACILITY
EF	EACH FACE, EXHAUST FAN
EFF	EFFICIENCY, EFFICIENT, EFFLUENT
EFL	EFFLUENT
EIFS	EXTERIOR INSULATION AND FINISH SYSTEM
EL	ELEVATION
ELB	ELBOW
ELC	ELECTRICAL LOAD CENTER
ELEC	ELECTRIC, ELECTRICAL
ENGR	ENGINEER
EOG	EDGE OF GRAVEL
EOP	EDGE OF PAVEMENT
ESC	EROSION AND SEDIMENT CONTROL
EP	EXPLOSION PROOF, EDGE OF PAVING
EQ	EQUALIZATION
EQL	EQUAL
EQL SP	EQUALLY SPACED
EQPT	EQUIPMENT
ESC	EROSION AND SEDIMENT CONTROL
ETM	ELAPSED TIME METER
EVC	END OF VERTICAL CURVE
EW	EACH WAY
EWC	ELECTRIC WATER COOLER
EXH	EXHAUST
EXP	EXPANSION, EXPOSED
EXP AB	EXPANSION ANCHOR BOLT
EXP JT	EXPANSION JOINT
EXST, EXIST	EXISTING
EXT	EXTERIOR
°F	DEGREE FAHRENHEIT
FB	FLAT BAR
F, FU	FUSE
F, FX	FIXED
FAP	FIRE ALARM PANEL
FC	FLEXIBLE CONDUIT
FCA	FLANGED COUPLING ADAPTER
FCL2	FREE CHLORINE RESIDUAL
FCO	FLOOR CLEANOUT
FCTY	FACTORY
FD	FLOOR DRAIN
FDC	FIRE DEPARTMENT CONNECTION
FDN	FOUNDATION
FDR	FEEDER
FEXT	FIRE EXTINGUISHER
FF	FINISHED FLOOR
FG	FINISH GRADE, FLOAT GLASS
FH	FLAT HEAD
FHY	FIRE HYDRANT
FIG	FIGURE
FL	FLOW LINE
FLOC	FLOCCULATION
FLG	FLANGE
FL	FLOOR
FLEX	FLEXIBLE
FLH	FLAT HEAD
FLTR	FILTER
FLUOR	FLUORESCENT
FM	FORCE MAIN
FNSH	FINISH
FOB	FLAT ON BOTTOM
FOT	FLAT ON TOP
FP	FIELD PANEL
FPM	FEET PER MINUTE
FR	FORWARD REVERSE
FRP	FIBERGLASS REINFORCED PLASTIC
FSHS	FOLDING SHOWER SEAT
FT	FOOT OR FEET
FTG	FOOTING
FU	FIXTURE UNIT
FVNR	FULL VOLTAGE NON-REVERSING
FVR	FULL VOLTAGE REVERSING
FWD	FORWARD
G, GND	GROUND
GA	GAUGE
GAL	GALLON
GALV	GALVANIZED
GB	GYPSUM BOARD
GC	GROOVED COUPLING
GCMU	GLAZED CONCRETE MASONRY UNITS
GFA	GROOVED FLANGE ADAPTER
GFI	GROUND FAULT INTERRUPTER
GFR	GROUND FAULT RELAY
GH	GREENHOUSE
GL	GLASS
GPD	GALLONS PER DAY
GPH	GALLONS PER HOUR
GPM	GALLONS PER MINUTE
GPS	GLOBAL POSITION SYSTEM
GRTG	GRATING
GSB	GYPSUM SOFFIT BOARD
GSP	GALVANIZED STEEL PIPE
GV	GATE VALVE
GVL	GRAVEL
GWB	GYPSUM WALLBOARD
GYP	GYPSUM
H	HIGH, HORN OR HOWLER
H2S	HYDROGEN SULFIDE
H.A.S.	HEADED ANCHOR STUD
HC	HOLLOW CORE WOOD
HCL	HYDROCHLORIC ACID
HDNR	HARDENER
HDNS	HARDNESS
HDR	HEADER
HDW	HARDWARE
HGL	HYDRAULIC GRADE LINE
HK	HOOK
HGT	HEIGHT
HH	HANDHOLE
HID	HIGH INTENSITY DISCHARGE
HK	HOOK
HM	HOLLOW METAL
HOA	HAND-OFF-AUTO
HOR	HAND-OFF-REMOTE
HORIZ	HORIZONTAL
HP	HORSEPOWER
HPT	HIGH POINT
HPU	HYDRAULIC POWER UNIT
HR	HOSE RACK, HANDRAIL
HV	HOSE VALVE
HVAC	HEATING, VENTILATING AND AIR CONDITIONING
HWS	HIGH WATER SURFACE
IC	INTERRUPTING CAPACITY
ID	INDUCED DRAFT, INSIDE DIAMETER
IE	INVERT ELEVATION
I.F.	INSIDE FACE
IG	INSULATING, INSULATING GLASS
IN	INCH
INCAND	INCANDESCENT
INFL	INFLUENT
INJS	INJECTIONS
INST	INSTANTANEOUS
INSTM	INSTRUMENT, INSTRUMENTATION
INSUL	INSULATION
INV	INVERT
IP	INLET PROTECTION, INSTRUMENTATION PANEL
IRRIG	IRRIGATION
ITG	INSULATED TEMPERED GLASS
ITX	ISOLATION TRANSFORMER
IU	INTAKE UNIT
IW	IRRIGATION WELL
J	JALOUSIE
JA	JAL-AWNING
JB	JUNCTION BOX
JAN	JANITOR
JCT	JUNCTION
JT	JOINT
K	KEY GROUP, KEY INTERLOCK
KIP	THOUSAND POUNDS
KIT	KITCHEN
K-PL	KICKPLATE
KSK	KITCHEN SINK
KV	KILOVOLTS
KVA	KILOVOLT AMPERES
KVAR	KILOVOLT AMPERES REACTIVE
KW	KILOWATT
L	ANGLE, LENGTH
LA	LIGHTNING ARRESTER
LAB	LABORATORY
LAM	LAMINATE
LAT	LATITUDE
LB	POUND
LC	LIGHTING CONTACTOR
LD	COMBINATION LOUVER/DAMPER
LDG	LOADING DOCK
LEL	LOWER EXPLOSIVE LIMIT
LF	LINEAR FEET
LG	LONG
LH	LEFT HAND
LHR	LEFT HAND REVERSE
LLH	LONG LEG HORIZONTAL
LLV	LONG LEG VERTICAL
LNTL	LINTEL
LONG	LONGITUDINAL
LOS	LOCK-OUT STOP PUSHBUTTON
LP	LIGHT POLE, LIGHTING PANEL, LOCAL PANEL
LPT	LOW POINT
LR	LATCHING RELAY
LR	LOCAL-REMOTE
LR	LONG RADIUS
LS	LABORATORY SINK
LT	LEFT
LTG, LTS	LIGHTS OR LIGHTING
LTX	LIGHTING TRANSFORMER
LWS	LOW WATER SURFACE
MA	MANUAL-AUTO
MAS	MASONRY
MATL	MATERIAL
MAX	MAXIMUM
MB	MACHINE BOLT
MC	MASONRY CLEARANCE
MC	MODULATE-CLOSE
MCC	MOTOR CONTROL CENTER
MCJ	MASONRY CONTROL JOINT
MDO	MEDIUM DENSITY OVERLAY
MECH	MECHANICAL
MFD	MANUFACTURED
MFR	MANUFACTURER
MGD	MILLION GALLONS PER DAY
MH	MANHOLE, MOUNTING HEIGHT
MIN	MINIMUM, MINUTE
MISC	MISCELLANEOUS
MJ	MECHANICAL JOINT
MLO	MAIN LUGS ONLY
MMDW	DRY WEATHER MAXIMUM MONTH
MMP	MECHANICAL MOUNTING PANEL
MMWW	WET WEATHER MAXIMUM MONTH
MO	MANUAL OPERABLE, MASONRY OPENING
MP	METAL PANEL, MILE POST
MPU	MULTIPURPOSE UNIT
MS	MANUFACTURER'S STANDARD
MSC	MANUFACTURER SUPPLIED CABLE
MSR	GROUPED MOTOR CONTROL
MT	MOUNT
MTD	MOUNTED
MTG	MOUNTING
MTS	MANUAL TRANSFER SWITCH
MTS	MILL TYPE STEEL PIPE
MU	MULCHING
MV	MERCURY VAPOR
MW	MONITORING WELL
MWS	MAXIMUM WATER SURFACE
N	NORTH, NEUTRAL
NA	NOT APPLICABLE
NA	NON-AUTOMATIC
NC	NORMALLY CLOSED
NEUT	NEUTRAL
NG	NATURAL GAS
NGVD	NATIONAL GEODETIC VERTICAL DATUM
NIC	NOT IN CONTRACT
NMED	NEW MEXICO ENVIRONMENT DEPARTMENT
NMOSE	NEW MEXICO OFFICE OF THE STATE ENGINEER
N.O.	NORMALLY OPEN
NO., #	NUMBER
NOM	NOMINAL
NP	NON-PROTECTED
NPT	NATIONAL PIPE THREADS
NPW	NON POTABLE WATER
NRCY	NITRIFIED RECYCLE
NS	NON-SHRINK
NTS	NOT TO SCALE
O2	OXYGEN
O TO O	OUT TO OUT
OA	OVERALL, ODOROUS AIR
OC	ON CENTER
OC	OPEN-CLOSE (O)
OCA	OPEN-CLOSE-AUTO
OCR	OPEN-CLOSE-REMOTE
OD	OUTSIDE DIAMETER, OVERFLOW DRAIN
O.F.	OUTSIDE FACE
OF/CI	OWNER FURNISHED, CONTRACTOR INSTALLED
OF/OI	OWNER FURNISHED, OWNER INSTALLED
OL	OVERLOAD RELAY
OO	ON-OFF
OOA	ON-OFF-AUTO
OOR	ON-OFF-REMOTE
OP	OPAQUE PANEL, OUTLET PROTECTION
OPER	OPERATOR
OPNG	OPENING
OPP	OPPOSITE
OSA	OUTSIDE AIR
OSC	OPEN-STOP-CLOSE
OSD	OPEN SITE DRAIN
OWSJ	OPEN WEB STEEL JOIST
OZ	OUNCE
P	PROJECTED
P	PILASTER, PIPE
PAVT	PAVER TILE
PB	PUSHBUTTON SWITCH
PC	POINT OF CURVE, PHOTOCELL
PC	PRECAST CONCRETE PANEL
PCCP	PRECAST CONCRETE CYLINDER PIPE
PCV	PRESSURE CONTROL VALVE
PE	PLAIN END
PED	PEDESTAL, PEDESTRIAN
PEP	POLYETHYLENE PIPE
PEN.	PENETRATION
PFC	POUNDS PER CUBIC FOOT
PGL	PROFILE GRADE LINE
PH	PENTHOUSE
pH	HYDROGEN ION CONCENTRATION
PH	PHASE
PHF	PASSIVE HARMONIC FILTER
PI	POINT OF INTERSECTION
PIT	PILOT TUBE TEST STATION
PJF	PREMOLDED JOINT FILLER
PL	PLATE
PL	PROPERTY LINE
PLA	PLACES
PLAM	PLASTIC LAMINATE
PLAS	PLASTER, PLASTIC
PLC	PROGRAMMABLE LOGIC CONTROLLER
PLEFF	PLANT EFFLUENT
PLYWD	PLYWOOD
PNL	PANEL
PP	POWER POLE
P-P	PUSH-PULL
PPL	POLYPROPYLENE LINED
PR	PAIR
PRC	POINT OF REVERSE CURVE
PRCST	PRECAST
PREFAB	PREFABRICATION
PRES	PRESSURE
PRI	PRIMARY
PRM	PERMANENT REFERENCED MARKER
PROJ	PROJECTION
PROP	PROPERTY
PS	PLASTIC SHEET, POLYCARBONATE SHEET
PS	PAINT SYSTEM, PUMP STATION
PSF	POUNDS PER SQUARE FOOT
PSI	POUNDS PER SQUARE INCH
PSIG	POUNDS PER SQUARE INCH, GAUGE
PT	POINT OF TANGENCY
PT	POTENTIAL TRANSFORMER
PT	PRESSURE TREATED
PTD	PAPER TOWEL DISPENSER
PTN	PARTITION
PV	PLUG VALVE
PVC	POLYVINYL CHLORIDE
PVI	POINT OF VERTICAL INTERSECTION
PVMT	PAVEMENT
PVT	POINT OF VERTICAL TANGENCY
PW	POTABLE WATER
QAA	AVERAGE FLOW
QMM	MAXIMUM 30 DAY FLOW
QPI	PEAK INSTANTANEOUS FLOW
QPP	PEAK PUMPING FLOW
QT	QUARRY TILE

NOTES:

CONTACT ENGINEER FOR ABBREVIATIONS USED BUT NOT SHOWN ON THIS DRAWING.

RECLAMATION
Managing Water in the West

ch2m

VERIFY SCALE
BAR IS ONE INCH ON ORIGINAL DRAWING.
0 1"

ALWAYS THINK SAFETY

U.S. DEPARTMENT OF THE INTERIOR
BUREAU OF RECLAMATION
NAVAJO-GALLUP WATER SUPPLY PROJECT
NEW MEXICO

CUTTER LATERAL - REACH 21

WATER TREATMENT PLANT

NO.	DATE	REVISION	BY	APVD
1	02/13/2019	ISSUED FOR CONSTRUCTION	MK	JP
0	9/13/2018	ROUGH GRADING/EARLY PIPING WORK PACKAGE	MK	JP

M KRUMHOLZ
DESIGNED
F JAGLA
DRAWN
J PETERSON
CHECKED
M KRUMHOLZ
TECH. APPR.
J PETERSON
APPROVED
ADMIN APPROVAL -

FARMINGTON, NM FEBRUARY 2019

GENERAL

ABBREVIATIONS

000-G-0004

SHEET 4 OF 405

DATE PLOTTED 1/29/2019
TIME PLOTTED 8:50:25 PM

CAD SYSTEM
CAD FILENAME 000-G-D004_R62853.dgn

ABBREVIATIONS (CONT.)

R	RISER
R OR RAD	RADIUS
RA	RETURN AIR
RC	REINFORCED CONCRETE
RCP	REINFORCED CONCRETE PIPE
RCPT	RECEPTACLE
RD	ROAD, ROOF DRAIN
RDCR	REDUCER
RDW	REDWOOD
RECIR	RECIRCULATION
REF	REFER OR REFERENCE
REFR	REFRIGERATE, REFRIGERANT
REINF	REINFORCED, REINFORCING, REINFORCE
REQD	REQUIRED
RESIL	RESILIENT
RFCA	RESTRAINED FLANGE COUPLING ADAPTER
RFS	ROLL-UP FIRE SHUTTER
RH	RIGHT HAND
RH	RODHOLE
RHR	RIGHT HAND REVERSE
RL	RAIN LEADER
RLS	RUBBER LINED STEEL
RM	ROOM
RO	ROUGH OPENING
ROL	RAISE-OFF-LOWER
RPBP	REDUCED PRESSURE BACKFLOW PREVENTER
RPM	REVOLUTIONS PER MINUTE
RR	RIPRAP
RRUB	RADIAL RUBBER
RS	RIGID STEEL, RAW SEWAGE
RST	REINFORCING STEEL
RT	RIGHT, ROUND TUBE
RTN	RETURN
RTO	REGENERATIVE THERMAL OXIDIZER
RUB	RUBBER
RUBC	RUBBER CUSHIONED FLOORING
RUBS	RUBBER ESD CONTROL FLOORING
R/W	RIGHT OF WAY
S	I-BEAM, SANITARY
S	SLOPE, SOUTH, SWITCH
SA	SUPPLY AIR
SATC	SUSPENDED ACCUSTICAL TILE CEILING
SB	SEDIMENT BASIN
SC	SHOWER CURTAIN, SOLID CORE WOOD
SCADA	SUPERVISORY CONTROL AND DATA ACQUISITION
SCC	SOLID CORE
SCFM	STANDARD CUBIC FEED PER MINUTE
SCHED	SCHEDULE
SCU	SPEED CONTROL UNIT
SD	SOAP DISPENSER
SDP	SUB-DISTRIBUTION PANEL
SDWA	SAFE DRINKING WATER ACT
SDWK	SIDEWALK
SEC	SECONDARY
SECT	SECTION
SED	SEDIMENTATION
SEW	SEWAGE
SG	LAMINATED SAFETY GLASS, SAFETY
SGWB	SUSPENDED GYPSUM WALL BOARD
SH	SHEET
SHA	SURFACE HARDENING AGENT
SHS	SOLIDS HANDLING SYSTEM
SIM	SIMILAR
SK	SINK
SLR	SEALER
SMLS	SEAMLESS EPOXY
SOI	SPRAY- ON INSULATION
SOLN	SOLUTION
SP	SPACE OR SPACES, SPANDREL PANEL, STORMPROOF
SPEC SPECS	SPECIFICATIONS
SPD	SUMP PUMP DISCHARGE
SPG	SPACING
SPLY	SUPPLY
SQ	SQUARE
SQ FT	SQUARE FOOT, FEET
SQ IN	SQUARE INCH
SR	SHORT RADIUS
SS	START-STOP, SANITARY SEWER
SST	STAINLESS STEEL
SSC	SUPERVISORY SET POINT CONTROL
ST	STORM DRAIN
ST	STRAIGHT
STA	STATUS, STATION
STD	STANDARD
STIF	STIFFENER
STIRR	STIRRUP
STL	STEEL
STRL	STRUCTUAL
STRUCT	STRUCTURE
SUBFL	SUBFLOOR
SUSP	SUSPENDED
SV	SOLENOID VALVE
SVIN	SHEET VINYL
SWBD	SWITCHBOARD
SWMP	STORMWATER MANAGEMENT PLAN
SWGR	SWITCHGEAR
SYMM	SYMMETRICAL
T	THERMOSTAT, TREAD
T&B	TOP AND BOTTOM
T&G	TONGUE AND GROOVE
TA	TRANSFER AIR
TAN	TANGENT
TB	TERMINAL BOARD
TBG	TUBING
TC	TIME TO CLOSE
TC	TURBIDITY CURTAIN
TCAD	TIME CLOSE AFTER DE-ENERGIZATION
TCAE	TIME CLOSE AFTER ENERGIZATION
TDH	TOTAL DYNAMIC HEAD
TDR	TIME DELAY RELAY
TECH	TECHNICAL
TEL	TELEPHONE
TEMP	TEMPORARY, TEMPERATURE
TF	TOP FACE
TFG	TEMPERED FLOAT GLASS
TG	TEMPERED
TH	TOP-HINGED
THD	THREAD
THK	THICKNESS
THRU	THROUGH
TJB	TERMINAL JUNCTION BOX
TL	TEFLON LINED PIPE
T.O.	TIME TO OPEN, TOP OF
TOAE	TIME OPEN AFTER ENERGIZATION
TOC	TOP OF CONCRETE
TOC	TOP OF CURB
TOD	TIME ON DELAY, TOP OF DUCT TOTAL OXYGEN DEMAND
TOF	TOP OF FOOTING
TOG	TOP OF GROUT, TOP OF GRATE
T.O.P.	TOP OF PARAPET
TOS	TOP OF SLAB, TOP OF STEEL
TOW	TOP OF WALL
TP	TURNING POINT
TR	TRANSOM, TRUSS
TRANS	TRANSFORMER, TRANSITION
TRANSV	TRANSVERSE
TRD	TREAD
TS	TEMPORARY SEEDING, TUBE STEEL
TSHT	THRESHOLD
TSS	TOTAL SUSPENSION SOLIDS
TST	TOP OF STEEL
TTC	TELEPHONE TERMINAL CABINET
TTD	TOILET TISSUE DISPENSER
TU-X	TREATMENT UNIT NO. X
TURB	TURBIDITY
TWP	TRANSLUCENT WALL PANEL
TX	TRANSFORMER
TYP	TYPICAL
UON	UNLESS OTHERWISE NOTED
UNO	UNLESS NOTED OTHERWISE
UPS	UNINTERRUPTIBLE POWER SUPPLY
USB	UNIT SUBSTATION
UVR	UNDER VOLTAGE RELAY
V	VENT, VALVE
V	VOLTMETER, VOLTS
VB	VAPOR BARRIER (RETARDER)
VC	VERTICAL CURVE
VCP	VITRIFIED CLAY PIPE
VCT	VINYL COMPOSITION TILE
VEL	VELOCITY
VERT	VERTICAL
VHC	VOLATILE HYDROCARBONS
VIB	VIBRATION
VIF	VERIFY IN FIELD
VIN	VINYL
VINT, VT	VINYL TILE
VP	VERTICAL PIVOTED
VPS	VENEER PLASTER SYSTEM
VPC	POINT OF VERTICAL CURVATURE
VPI	POINT OF VERTICAL INTERSECTION
VPT	POINT OF VERTICAL TANGENT
VS	VERTICAL SLIDE
VTR	VENT THRU ROOF
VWC	VINYL WALL COVERING
W	WEST, WIDE
W/	WITH
WAS	WASTE ACTIVATED SLUDGE
WC	WATER COLUMN
WEASTRIP	WEATHERSTRIP
WG	WIRE, WIRE GLASS
WH	WATTHOUR METER
WHD	WATTHOUR DEMAND METER
WP	WATERPROOF, WEATHERPROOF, WORKPOINT
WR	WASTE RECEPTACLE
WRB	WATER RESISTANT GWB
WS	WATER SURFACE, WATERSTOP, WELDED STEEL
WWF	WELDED WIRE FABRIC
WWPH	WET WEATHER PEAK HOUR
YR	YEAR

NOTES:

1. CONTACT ENGINEER FOR ABBREVIATIONS USED BUT NOT SHOWN ON THIS DRAWING.

SECTION / DETAIL DESIGNATIONS

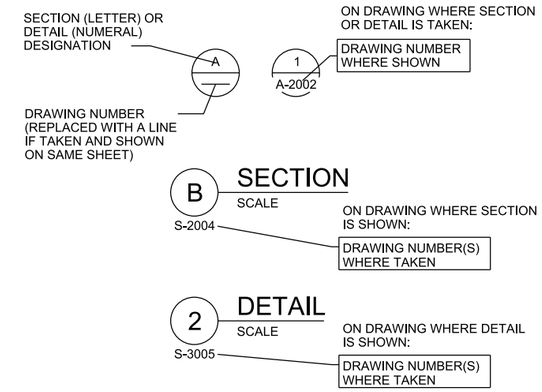

DRAWING TITLE
SCALE

ON DRAWING WHERE ONLY A TITLE IS REQUIRED WITH NO REFERENCE (eg: ELEVATIONS)

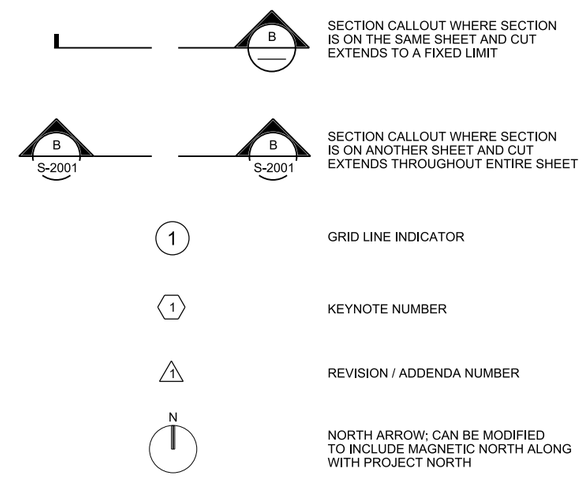

DESIGN DETAIL DESIGNATION

NOTES:

1. ALL DESIGN DETAILS ARE TYPICAL AND MUST BE USED IF DESIGN DETAIL DESIGNATION IS NOT SHOWN
2. THE TERM STANDARD DETAIL, OR A FORM OF IT, IS SYNOMONOUS WITH DESIGN DETAIL. THE DESIGN DETAILS REPRESENT THE CHARACTER AND NATURE OF THE WORK REQUIRED THROUGHOUT THE PROJECT. ALL ASSOCIATED WORK SHALL BE IN ACCORDANCE WITH THE DESIGN DETAILS SHOWN WHETHER THE DETAILS ARE SPECIFICALLY REFERENCED OR NOT.

RECLAMATION
Managing Water in the West

ch2m

VERIFY SCALE
BAR IS ONE INCH ON ORIGINAL DRAWING.
0 1"

ALWAYS THINK SAFETY

U.S. DEPARTMENT OF THE INTERIOR
BUREAU OF RECLAMATION
NAVAJO-GALLUP WATER SUPPLY PROJECT
NEW MEXICO

CUTTER LATERAL - REACH 21

WATER TREATMENT PLANT

NO.	DATE	REVISION	BY	APV'D
1	02/13/2019	ISSUED FOR CONSTRUCTION	MK	JP
0	9/13/2018	ROUGH GRADING/EARLY PIPING WORK PACKAGE	MK	JP

M KRUMHOLZ
DESIGNED
F JAGLA
DRAWN
J PETERSON
CHECKED
M KRUMHOLZ
TECH. APPR.
J PETERSON
APPROVED
ADMIN APPROVAL -

FARMINGTON, NM FEBRUARY 2019

GENERAL

ABBREVIATIONS AND LEGEND

000-G-0005

SHEET 5 OF 405

DATE PLOTTED 1/29/2019
TIME PLOTTED 8:50:29 PM
CAD SYSTEM
CAD FILENAME 000-G-0005_662853.dgn

GENERAL SITE NOTES:

1. SOURCE OF TOPOGRAPHY SHOWN ON THE CIVIL PLANS ARE BASE MAPS PROVIDED BY RECLAMATION. EXISTING CONDITIONS WILL BE VERIFIED AND WORK PLAN WILL BE ADJUSTED ACCORDINGLY PRIOR TO BEGINNING CONSTRUCTION.
2. EXISTING TOPOGRAPHY, STRUCTURES, AND SITE FEATURES ARE SHOWN SCREENED AND/OR LIGHT-LINED. NEW FINISH GRADE, STRUCTURES, AND SITE FEATURES ARE SHOWN HEAVY-LINED.
3. HORIZONTAL DATUM: NAD 83 (2007). NEW MEXICO STATE PLANE WEST ZONE GRID.
4. VERTICAL DATUM: NAVD 88.
5. MAINTAIN, RELOCATE, OR REPLACE EXISTING SURVEY MONUMENTS, CONTROL POINTS, AND STAKES WHICH ARE DISTURBED OR DESTROYED. PERFORM THE WORK TO PRODUCE THE SAME LEVEL OF ACCURACY AS THE ORIGINAL MONUMENT(S) IN A TIMELY MANNER, AND AT THE SUBCONTRACTOR'S EXPENSE.
6. FOR LOCATION OF CONTROL POINT ON STRUCTURES, SEE STRUCTURAL DRAWINGS.
7. COORDINATES AND DIMENSIONS SHOWN FOR ROADWAY IMPROVEMENTS ARE TO EDGE OF GRAVEL.
8. STAGING AREA SHALL BE FOR DESIGN BUILDERS AND SUBCONTRACTORS EMPLOYEE PARKING, TRAILERS AND ON-SITE STORAGE OF MATERIALS.
9. PROVIDE TEMPORARY FENCING AS NECESSARY TO MAINTAIN SECURITY AT ALL TIMES.
10. ELEVATIONS GIVEN ARE TO FINISH GRADE UNLESS OTHERWISE SHOWN.
11. SLOPE UNIFORMLY BETWEEN CONTOURS AND SPOT ELEVATIONS SHOWN.
12. SUBCONTRACTOR SHALL BE RESPONSIBLE FOR IMPLEMENTING AND MAINTAINING EROSION CONTROL DEVICES DURING CONSTRUCTION. EROSION CONTROL DEVICES 3125-130, 3125-150, 3125-160, AND 3125-165 ARE THE MINIMUM REQUIRED.
13. SUBCONTRACTOR SHALL TAKE ALL OTHER MEASURES TO POSITIVELY PRECLUDE EROSION MATERIALS FROM LEAVING THE SITE.

GENERAL YARD PIPING AND UTILITIES NOTES:

1. EXISTING UNDERGROUND UTILITIES OBTAINED FROM AS-BUILTS AND FROM FIELD SURVEY. SUBCONTRACTOR SHALL FIELD VERIFY DEPTH AND LOCATION PRIOR TO EXCAVATION. PROTECT ALL EXISTING UTILITIES DURING CONSTRUCTION.
2. FOR PIPING FLOW STREAM IDENTIFICATION, SEE DRAWING 000-G-0702.
3. EXISTING PIPING AND EQUIPMENT ARE SHOWN SCREENED AND/OR LIGHT-LINED. NEW PIPING AND EQUIPMENT ARE SHOWN HEAVY-LINED.
4. UNLESS OTHERWISE SHOWN ALL PIPING SHALL HAVE A MINIMUM OF 4' COVER.
5. ALL PIPES SHALL HAVE A CONSTANT SLOPE BETWEEN INVERT ELEVATIONS UNLESS A FITTING IS SHOWN.
6. ALL NEW WATER PIPES MUST BE PROPERLY FLUSHED, PRESSURE TESTED, CHLORINATED AND BACTERIOLOGICALLY TESTED, AS SPECIFIED.
7. FOR TRENCHING AND BACKFILL, SEE 3123-110.
8. MINIMUM ALLOWABLE CLEARANCE BETWEEN PIPES AT CROSSINGS SHALL BE 3". CONTROLLED DENSITY FILL SUPPORT IS REQUIRED AS SHOWN ON 3305-763.
9. ALL ELEVATIONS SHOWN ON FACILITY 052 SHEETS ARE TO THE CENTERLINE OF PIPE.

GENERAL NOTE:

1. THIS IS A STANDARD LEGEND SHEET. THEREFORE, NOT ALL OF THE INFORMATION SHOWN MAY BE USED ON THIS PROJECT.

CIVIL LEGEND

EXISTING	THIS CONTRACT	
157.7	158.5	SPOT ELEVATION
155	155	CONTOUR LINE
	3:1	EMBANKMENT AND SLOPE
		DRAINAGEWAY OR DITCH
	CB OR CB	CATCH BASIN OR INLET
		TRENCH DRAIN
	OR	SIGN
	D OR S	MANHOLE
E	E	ELECTRICAL MANHOLE
H	H	ELECTRIC HANDHOLE
		POST OR GUARD POST
		GUY ANCHOR
		FIRE HYDRANT
		UTILITY POLE
		LIGHT POLE
	BM	BENCH MARK
		SURVEY CONTROL POINT OR POINT OF INTERSECTION
		BRUSH/TREE LINE
		TREE
		PROPERTY LINE
		CENTER LINE, BUILDING, ROAD, ETC.
		STAGING OR WORK AREA LIMITS
	N 1000.00 E 1000.00	STRUCTURE, BUILDING OR FACILITY LOCATION POINT - COORDINATES
	B-1	BORING LOCATION AND NUMBER
	TP-2	TEST PIT LOCATION AND NUMBER
	P-3	PIEZOMETER LOCATION AND NUMBER
OR	OR	DEMOLITION
OR	OR	STRUCTURE, BUILDING OR FACILITY
		ASPHALT CONCRETE PAVEMENT
		GRAVEL SURFACING
		CONCRETE PAVEMENT
		CURB
		CURB AND GUTTER
		SINGLE SWING GATE
		DOUBLE SWING GATE
		SLIDING GATE
		GUARD RAIL
		CHAIN LINK FENCE
		ARCHITECTURAL FENCE
		WIRE FENCE
		CULVERT
		100 YEAR FLOODPLAIN LIMIT

YARD PIPING LEGEND

EXISTING	THIS CONTRACT	
		NOMINAL PIPE DIAMETER
	8" PE	PIPE USE IDENTIFICATION
8" PE		PIPING < 30" DIAMETER
		PIPING ≧ 30" DIAMETER
		EXISTING PIPE TO BE ABANDONED
		EXISTING PIPE TO BE REMOVED
		NON-FREEZE HOSE VALVE (V-X) X = NO. IN SPECIFICATIONS
		NON-FREEZE HOSE VALVE WITH HOSE RACK (V-X) X = NO. IN SPECIFICATIONS
		INDICATOR POST VALVE
		GATE VALVE AND VALVE BOX
		BUTTERFLY VALVE AND VALVE BOX
		PLUG VALVE AND VALVE BOX
		FLEXIBLE COUPLING
		90° ELBOW UP
		90° ELBOW DOWN
		BEND < 90° UP
		BEND < 90° DOWN
		CONCENTRIC REDUCER
		CAP OR PLUG
		CLEANOUT
		FIRE HYDRANT

EROSION CONTROL LEGEND

COVER PRACTICES	SYMBOL
TEMPORARY SEEDING	TS
MULCHING AND MATTING	MU
CLEAR PLASTIC COVERING	CPC
PERMANENT SEEDING AND PLANTING	PS
CONSTRUCTION ENTRANCE	
CHECK DAMS	
OUTLET PROTECTION / RIPRAP	
FILTER FENCE	
STRAW BALE BARRIER (BIOFILTER)	
ESC BLANKET ON SLOPE	

RECLAMATION
Managing Water in the West

ch2m

VERIFY SCALE
BAR IS ONE INCH ON ORIGINAL DRAWING.
0 1"

ALWAYS THINK SAFETY

U.S. DEPARTMENT OF THE INTERIOR
BUREAU OF RECLAMATION
NAVAJO-GALLUP WATER SUPPLY PROJECT
NEW MEXICO

CUTTER LATERAL - REACH 21

WATER TREATMENT PLANT

NO.	DATE	REVISION	BY	APVD
1	02/13/2019	ISSUED FOR CONSTRUCTION	MK	JP
0	9/13/2018	ROUGH GRADING/EARLY PIPING WORK PACKAGE	MK	JP

J HONEA
DESIGNED
E ARMIJO
DRAWN
A FRIEDT
CHECKED
J HONEA
TECH. APPR.
J PETERSON
APPROVED
ADMIN APPROVAL -

FARMINGTON, NM FEBRUARY 2019

GENERAL

CIVIL AND YARD PIPING LEGEND

000-G-0101

SHEET 6 OF 405

DATE PLOTTED 2019/02/12
TIME PLOTTED 12:54:04 PM

CAD SYSTEM
CAD FILENAME 000-G-0101_R62853.dgn

GENERAL ARCHITECTURAL NOTES

1. UNLESS OTHERWISE INDICATED, PLAN DIMENSIONS ARE TO COLUMN GRID ON CENTERLINES, NOMINAL SURFACE OF MASONRY, FACE OF STUDS AND FACE OF CONCRETE WALLS.
2. "FLOOR LINE" REFERS TO TOP OF CONCRETE SLABS. FINISH FLOORING IS INSTALLED ABOVE THE FLOOR LINE. FOR DEPRESSED FLOORS AND CURBS, SEE STRUCTURAL DRAWINGS.
3. REPETITIVE FEATURES ARE NOT DRAWN IN THEIR ENTIRETY AND SHALL BE COMPLETELY PROVIDED AS IF DRAWN IN FULL.
4. WHERE DOOR IS LOCATED NEAR CORNER OF ROOM AND IS NOT LOCATED BY DIMENSION ON PLAN OR DETAILS, DIMENSION SHALL BE 3" FROM FACE OF STUD (WALL) TO FACE OF ROUGH OPENING. DIMENSION SHALL BE 6" FROM FACE OF WALL TO EDGE OF ROUGH OPENING AT CONCRETE WALLS, 8" AT CMU WALLS.
5. AT SOUND INSULATED WALLS, FULL HEIGHT PARTITIONS SHALL BE SEALED BOTH SIDES WITH ACOUSTIC SEALANT: TOP, BOTTOM, INTERSECTION, DOOR FRAMES, GLAZED OPENING FRAMES, AND OTHER PENETRATIONS.
6. LINE OF FINISH GRADES, AS SHOWN ON THE BUILDING ELEVATIONS AND SECTIONS ARE APPROXIMATE. THEY ARE AT THE BUILDING FACE, OR ON THE SECTION END EXCEPT AS NOTED.
7. VERIFY ALL ROUGH-IN DIMENSIONS FOR EQUIPMENT PROVIDED IN THIS CONTRACT, OR BY OTHERS.
8. REFER TO ARCHITECTURAL, STRUCTURAL, MECHANICAL, ELECTRICAL AND OTHER CATEGORIES OF DRAWINGS FOR ADDITIONAL NOTES.
9. VERIFY SIZE AND LOCATION OF, AND PROVIDE: REQUIRED OPENINGS THROUGH FLOORS AND WALLS, ACCESS DOORS, FURRING, CURBS, ANCHORS AND INSERTS. PROVIDE ALL BASES AND BLOCKING REQUIRED FOR ACCESSORIES, MECHANICAL, ELECTRICAL AND OTHER EQUIPMENT.

ARCHITECTURAL MATERIAL SYMBOLS

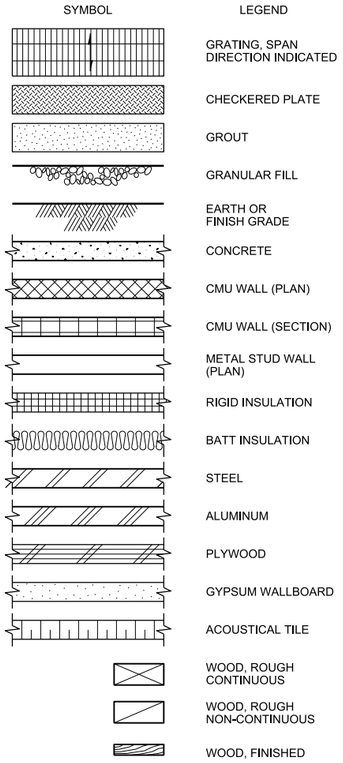

ARCHITECTURAL LEGEND

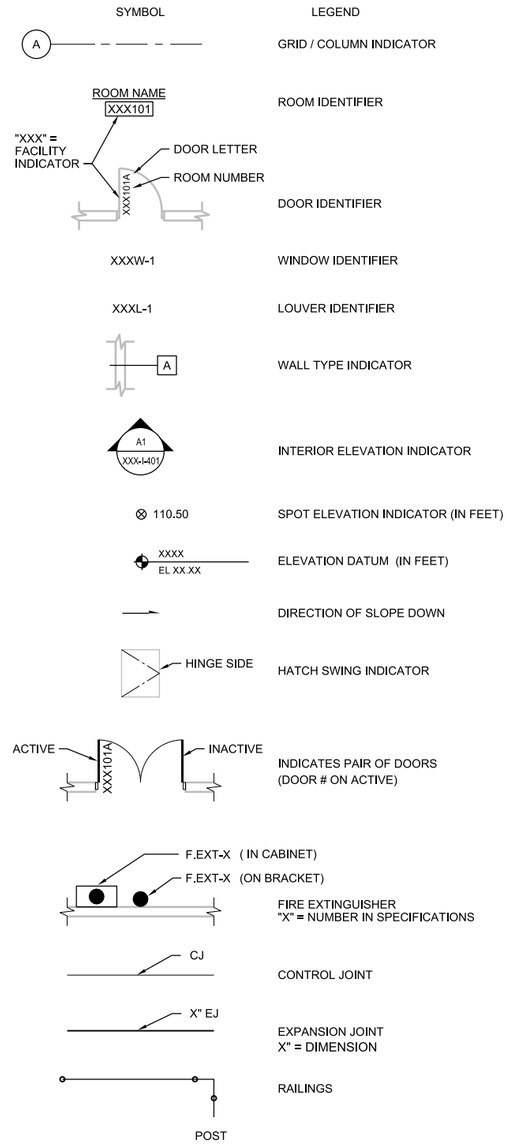

WALL TYPES

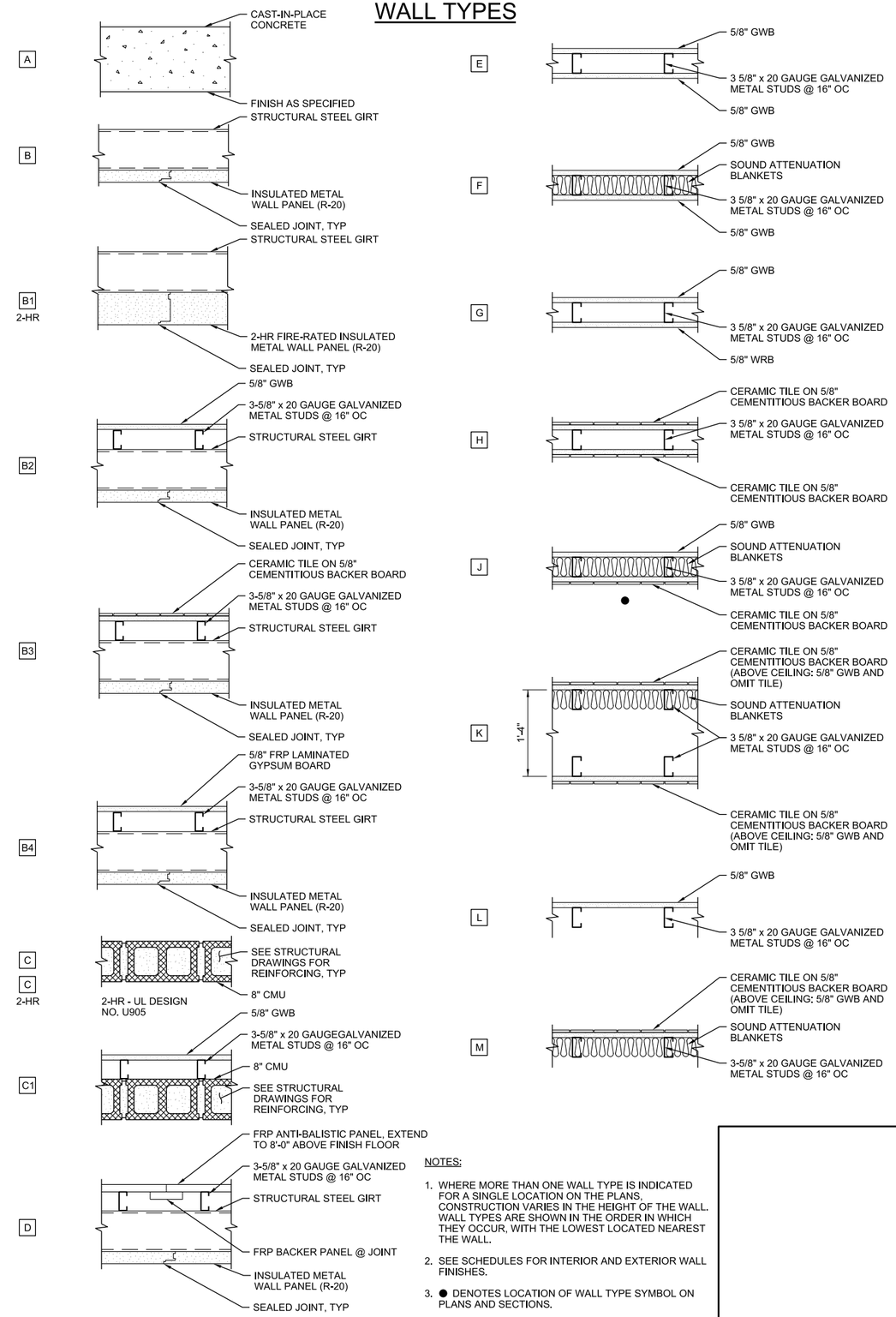

NOTES:

1. WHERE MORE THAN ONE WALL TYPE IS INDICATED FOR A SINGLE LOCATION ON THE PLANS, CONSTRUCTION VARIES IN THE HEIGHT OF THE WALL. WALL TYPES ARE SHOWN IN THE ORDER IN WHICH THEY OCCUR, WITH THE LOWEST LOCATED NEAREST THE WALL.
2. SEE SCHEDULES FOR INTERIOR AND EXTERIOR WALL FINISHES.
3. ● DENOTES LOCATION OF WALL TYPE SYMBOL ON PLANS AND SECTIONS.

RECLAMATION
Managing Water in the West

ch2m

VERIFY SCALE
BAR IS ONE INCH ON ORIGINAL DRAWING.
0 1"

ALWAYS THINK SAFETY

U.S. DEPARTMENT OF THE INTERIOR
BUREAU OF RECLAMATION
NAVAJO-GALLUP WATER SUPPLY PROJECT
NEW MEXICO

CUTTER LATERAL - REACH 21

WATER TREATMENT PLANT

NO.	DATE	REVISION	BY	APVD
0	02/13/2019	ISSUED FOR CONSTRUCTION	MK	JP

S PAYNE
DESIGNED
J HOSTETLER
DRAWN
S SILKWORTH
CHECKED
S PAYNE
TECH. APPR.
J PETERSON
APPROVED
ADMIN APPROVAL -

FARMINGTON, NM FEBRUARY 2019

GENERAL

ARCHITECTURAL GENERAL NOTES, SYMBOLS, LEGENDS AND WALL TYPES

000-G-0201

SHEET 7 OF 405

DATE PLOTTED 1/30/2019
TIME PLOTTED 8:57:03 AM

CAD SYSTEM
CAD FILENAME 000-G-0201_S82853.dgn

GENERAL NOTES

1. THE ENGINEER WAIVES ANY AND ALL RESPONSIBILITY AND IS NOT LIABLE FOR PROBLEMS THAT MAY ARISE FROM CONTRACTOR'S FAILURE TO FOLLOW THESE DRAWINGS, SPECIFICATIONS, AND THE DESIGN INTENT THEY CONVEY, OR FOR PROBLEMS ARISING FROM FAILURE TO OBTAIN AND/OR FOLLOW THE ENGINEER'S GUIDANCE WITH RESPECT TO ANY ERRORS, OMISSIONS, INCONSISTENCIES, AMBIGUITIES, OR CONFLICTS.

2. IF THERE IS A CONFLICT BETWEEN THE PLANS, SPECIFICATIONS AND/OR MANUFACTURER'S RECOMMENDATIONS FOR ANY DEVICE, PART, OR MATERIAL USED IN THE PROJECT, THE CONTRACTOR SHALL IMMEDIATELY NOTIFY THE ENGINEER, IN WRITING, FOR CLARIFICATION AT LEAST TWO WEEKS PRIOR TO CONSTRUCTION OF SAID DEVICE, PART, OR MATERIAL.

3. IT IS THE RESPONSIBILITY OF THE CONTRACTOR TO FAMILIARIZE HIMSELF WITH THE LOCATION OF ALL UTILITIES LOCATED WITHIN THE LIMITS OF CONSTRUCTION. THE GENERAL LOCATION OF KNOWN EXISTING UTILITIES HAS BEEN SHOWN ON THE CONSTRUCTION DRAWINGS TO INDICATE THAT CAUTION MUST BE EXERCISED WHEN WORKING IN THESE AREAS. IN MANY CASES THE EXACT LOCATION OF THE FACILITIES IS NOT KNOWN. THE CONTRACTOR SHALL BE RESPONSIBLE FOR LOCATING AND PROTECTING ALL OVERHEAD AND UNDERGROUND UTILITIES WITHIN THE VICINITY OF THE NEW CONSTRUCTION. PRIOR TO THE START OF CONSTRUCTION, THE CONTRACTOR, WORKING WITH THE RESPECTIVE UTILITY COMPANIES, SHALL ACCURATELY LOCATE AND MARK ALL BURIED FACILITIES, INCLUDING SERVICE LINES. ALL EQUIPMENT LABOR, ETC. NECESSARY TO PROPERLY LOCATE THE EXISTING UTILITIES SHALL BE FURNISHED BY THE CONTRACTOR, THE COST OF WHICH SHALL BE INCIDENTAL TO THE WORK.

4. CONTRACTOR SHALL REPAIR ANY EXISTING STRUCTURE OR UTILITY PIPELINE DAMAGED DURING THE EXECUTION OF THE PROJECT, AT NO ADDITIONAL COSTS TO THE OWNER.

5. CONTRACTOR IS SOLELY RESPONSIBLE FOR CONSTRUCTING THE PROJECT ACCORDING TO CURRENT NEW MEXICO STANDARD SPECIFICATIONS FOR PUBLIC WORKS CONSTRUCTION (NMSSPWC) AWWA SPECS AND NAVAJO NATION / NTUA STANDARDS, INCLUDING WHERE PARTICULAR WORK ITEMS ARE NOT SPECIFIED HEREIN.

6. CONTRACTOR SHALL COMPLY WITH ALL REQUIREMENTS AS SET FORTH IN THE TECHNICAL SPECIFICATIONS AND CONTRACT DOCUMENTS. IT SHALL BE THE RESPONSIBILITY OF THE CONTRACTOR TO CONTACT THE ENGINEER REGARDING ANY QUESTION ARISING FROM ANY ASPECT OF THIS PROJECT NOT SPECIFICALLY COVERED IN THE PLANS AND TECHNICAL SPECIFICATIONS, OR ANY CHANGES OR CORRECTIONS TO THE PLANS AND SPECS.

7. THESE DRAWINGS DO NOT INCLUDE NECESSARY COMPONENTS FOR CONSTRUCTION SAFETY, WHICH SHALL REMAIN WHOLLY THE RESPONSIBILITY OF THE CONTRACTOR. ALL WORK ON THIS PROJECT SHALL BE PERFORMED IN ACCORDANCE WITH APPLICABLE FEDERAL (OSHA), STATE, TRIBAL AND LOCAL LAWS, RULES AND REGULATIONS CONCERNING SAFETY AND HEALTH. ALL EXCAVATION, TRENCHING AND SHORING ACTIVITIES MUST BE CARRIED OUT IN ACCORDANCE WITH OSHA 29 CFR 1926, SUBPART P - EXCAVATIONS.

8. CONTRACTOR SHALL PROVIDE INGRESS AND EGRESS TO ANY LOCAL BUSINESSES AND RESIDENTS AS REQUIRED FOR THE DURATION OF THE PROJECT. THE CONTRACTOR SHALL ADVISE OF AND SCHEDULE ACCESS CLOSURES AT LEAST 24 HOURS IN ADVANCE WITH PROPERTY OWNERS AND THE ENGINEER.

9. THE CONTRACTOR SHALL CONFINE HIS OPERATIONS TO THE CONSTRUCTION LIMITS OF THE PROJECT AND SHALL IN NO WAY ENCROACH ONTO ADJACENT PROPERTIES UNLESS LEGAL EASEMENTS ARE PROVIDED OR SECURED BY THE CONTRACTOR. THE CONTRACTOR WILL BE HELD RESPONSIBLE FOR ANY DAMAGE CAUSED BY CONSTRUCTION ACTIVITIES TO PUBLIC OR PRIVATE PROPERTY, INCLUDING UTILITIES.

10. THE DRAWINGS CONTAIN SPECIFIC EROSION CONTROL FEATURES DESIGNED BY THE ENGINEER TO PROTECT PROJECT FACILITIES FROM EROSION. THESE FEATURES ARE NOT DESIGNED TO PREVENT POLLUTION OF WATERWAYS DUE TO SEDIMENT. THE CONTRACTOR IS WHOLLY RESPONSIBLE TO PROVIDE A STORM WATER POLLUTION PREVENTION PLAN (SWPPP) AND IMPLEMENT THE BEST MANAGEMENT PRACTICES (BMPs) REQUIRED THEREIN, IN ADDITION TO THE FEATURES SHOWN ON THE DRAWINGS. ALL BID ITEMS REFERRING TO SPECIFIC EROSION CONTROL FEATURES, SUCH AS RIPRAP OR ROCK DAMS, ARE APPLICABLE ONLY TO FEATURES DESIGNED BY THE ENGINEER. A SEPARATE BID ITEM(S) IS PROVIDED FOR PREPARATION AND IMPLEMENTATION OF THE CONTRACTOR'S SWPPP.

11. ALL RIPRAP, ROCK CHECK DAMS AND OTHER EROSION CONTROL FEATURES SHOWN ON THE DRAWINGS ARE APPROXIMATE WITH REGARD TO QUANTITY, LOCATION, DIMENSIONS, SPACING, AND ORIENTATION. EXACT PLACEMENT WILL BE DETERMINED IN FIELD BY ENGINEER AFTER FINAL GRADING IS COMPLETE.

12. ALL AREAS DISTURBED BY THE CONSTRUCTION ACTIVITIES OF THIS PROJECT SHALL BE RESTORED AND RE-GRADED IN A MANNER ACCEPTABLE TO THE OWNER, ENGINEER, AND LAND OWNER. ALL DISTURBED AREAS SHALL BE RE-SEEDED PER THE CONTRACT DOCUMENTS.

13. ALL SURVEY CONTROL MARKERS AND COORDINATES SHOWN ON PLANS ARE PROVIDED BY OWNER. ENGINEER MAKES NO REPRESENTATION AS TO THEIR ACCURACY.

14. ALL PRESSURE RATINGS GIVEN HEREIN FOR PIPES, VALVES, FITTINGS AND OTHER COMPONENTS REFER TO COLD WATER WORKING PRESSURE RATING, UNLESS OTHERWISE NOTED.

15. THE PLAN AND PROFILE SHEETS SHOW HORIZONTAL BENDS WITHOUT SPECIFYING WHETHER THE HORIZONTAL BEND IS TO BE ACCOMPLISHED BY DI ELLS WITH THRUST BLOCK OR JOINT DEFLECTION OF JOINTED PVC PIPE. THE METHOD OF BENDING IS AT CONTRACTOR'S OPTION, PROVIDED ALL DESIGN REQUIREMENTS SET FORTH IN THE DRAWINGS AND SPECIFICATIONS ARE MET. IF DI ELL WITH THRUST BLOCK IS CHOSEN, CONTRACTOR WILL NOTIFY ENGINEER AND REQUIRED THRUST BLOCK SIZE WILL BE PROVIDED. VERTICAL BENDS SHALL BE COMPLETED BY JOINT DEFLECTION OF JOINTED PVC, INSTALLATION OF VERTICAL DUCTILE IRON ELLS SHALL NOT BE ALLOWED.

16. VERTICAL CLEARANCES AT WATERLINE CROSSINGS ON PLAN AND PROFILE SHEETS CALLED OUT AS "MIN CLR TO CL" REFER TO MINIMUM CLEARANCE FROM BOTTOM OF EXISTING WATERLINE TO VERTICAL CENTERLINE OF WATERLINE. VERTICAL CLEARANCES FOR CASINGS CALLED OUT AS "MIN CLR TO CASING" REFER TO MINIMUM CLEARANCE FROM BOTTOM OF EXISTING PIPELINE OR FINISHED GRADE TO TOP OF CASING. VERTICAL CLEARANCES AT WASH CROSSINGS CALLED OUT AS "MIN TO CL" REFER TO MINIMUM PIPE DEPTH, MEASURED FROM BOTTOM OF WASH TO VERTICAL CENTERLINE OF WATERLINE.

17. ALL SCALES ARE BASED ON 11" x 17" SHEET SIZE.

CONTACT INFORMATION:

SOUDER, MILLER & ASSOCIATES (ENGINEER):

TORY TADANO, P.E (OFFICE) (505) 299-0942 (CELL) (505) 215-2807

ABBREVIATIONS

AASHTO	AMERICAN ASSOCIATION OF STATE HIGHWAY AND TRANSPORTATION OFFICIALS
A.C.	ASPHALTIC CONCRETE
ACI	AMERICAN CONCRETE INSTITUTE
AC.	ACRE
AC-FT.	ACRE FEET
AISC	AMERICAN INSTITUTE OF STEEL CONSTRUCTION
ALIGN.	ALIGNMENT
ALUM	ALUMINUM
AMSL	ABOVE MEAN SEA LEVEL
ANSI	AMERICAN NATIONAL STANDARDS INSTITUTE
APPROX.	APPROXIMATE
ARV	AIR RELEASE VALVE
ASTM	AMERICAN SOCIETY FOR TESTING AND MATERIALS
AWG	AMERICAN WIRE GAUGE
AWWA	AMERICAN WATER WORKS ASSOCIATION
BFV	BUTTERFLY VALVE
BIA	BUREAU OF INDIAN AFFAIRS
BLDG	BUILDING
BLM	BUREAU OF LAND MANAGEMENT
BV	BALL VALVE
BVCE	BEGIN VERTICAL CURVE ELEVATION
BVCS	BEGIN VERTICAL CURVE STATION
CL	CENTERLINE
CFS	CUBIC FEET PER SECOND
CI	CAST IRON
CLR.	CLEARANCE
CLSM	CONTROLLED LOW STRENGTH MATERIAL
CMP	CORRUGATED METAL PIPE
COMM.	COMMUNICATION
CONC.	CONCRETE
CONST.	CONSTRUCTION
CONT.	CONTINUOUS
CONT.	CONTINUED
COR.	CORNER
COUP.	COUPLING
CP	CONTROL POINT
CTR	CENTER
CU	CUBIC
CY	CUBIC YARD
DI	DUCTILE IRON
DIA	DIAMETER
DIMS	DIMENSIONS
DR	DIMENSION RATIO
DW	DRIVEWAY
E	EAST
E	EASTING
EA.	EACH
ED.	EDITION
EG	EXISTING GRADE
ELEC.	ELECTRICAL
EL., ELEV.	ELEVATION
ELL	ELBOW/BEND
EOP	EDGE OF PAVEMENT
EQ.	EQUAL
ESMT.	EASEMENT
EVCE	END VERTICAL CURVE ELEVATION
EVCS	END VERTICAL CURVE STATION
EX, EXIST.	EXISTING
FBE	FUSION BONDED EPOXY
FF	FINISHED FLOOR
FFE	FINISHED FLOOR ELEVATION
FG	FINISHED GRADE
FIG.	FIGURE
FL	FLANGE
FND.	FOUND
FNPT	FEMALE NATIONAL PIPE THREAD
FRP	FIBER REINFORCED PLASTIC
FT.	FEET
FV	FLUSH VALVE
GA.	GAUGE
GALV.	GALVANIZED
GI	GALVANIZED IRON
GPM	GALLONS PER MINUTE
GV	GATE VALVE
HDD	HORIZONTAL DIRECTIONAL DRILLING
HDPE	HIGH DENSITY POLYETHYLENE
HORIZ.	HORIZONTAL
HP	HORSE POWER
HT	HEIGHT
HWY	HIGHWAY
I.A.	INDIAN ALLOTMENT
I.D.	INNER DIAMETER
I.E.	THAT IS, FOR EXAMPLE
IN.	INCH
INV	INVERT
IPS	IRON PIPE SIZE
KSI	KILO POUNDS PER SQUARE INCH
LAT	LATITUDE
L, LEN	LENGTH
LF	LINEAR FEET
LT	LEFT
LONG	LONGITUDE
LVC	LENGTH VERTICAL CURVE
MANUF	MANUFACTURER
MAX.	MAXIMUM
MIL	ONE THOUSANDTHS OF AN INCH
MIN.	MINIMUM
M.J.	MECHANICAL JOINT
MNPT	MALE NATIONAL PIPE THREAD
M.S.L.	MEAN SEA LEVEL
N	NORTH
N	NORTHING
NEC	NATIONAL ELECTRICAL CODE
NG	NATURAL GAS
NGWSP	NAVAJO GALLUP WATER SUPPLY PROJECT
NM	NEW MEXICO
NMDOT	NEW MEXICO DEPARTMENT OF TRANSPORTATION
NMED	NEW MEXICO ENVIRONMENT DEPARTMENT
NN	NAVAJO NATION
NO.	NUMBER
NPT	NATIONAL PIPE THREAD
NTS	NOT TO SCALE
OAE	OR APPROVED EQUAL
O.C.	ON CENTER
O.C.E.W.	ON CENTER EACH WAY
O.D.	OUTER DIAMETER
OHE	OVERHEAD ELECTRICAL
PE	PLAIN END
P.G.P.	PER GRADING PLAN
PI	POINT OF INFLECTION
PRV	PRESSURE REDUCING VALVE
PSF	POUNDS PER SQUARE FOOT
PSI	POUNDS PER SQUARE INCH
PVC	POLY VINYL CHLORIDE
PVI	POINT VERTICAL INFLECTION
PVT	PRIVATE
Q	FLOW
QTY.	QUANTITY
R	RADIUS
R-	RANGE
REF	REFERENCE
RO	ROUGH OPENING
ROW	RIGHT OF WAY
RT	RIGHT
S	SOUTH
SCH	SCHEDULE
SDR	STANDARD DIMENSION RATIO
SEC.	SECTION
SF	SAFETY FACTOR
SHT	SHEET
SPECS.	SPECIFICATIONS
SS	STAINLESS STEEL
STA	STATION
STD.	STANDARD
SW	SIDEWALK
T	TOWNSHIP
TBD	TO BE DETERMINED
TBR	TO BE REMOVED
TCE	TEMPORARY CONSTRUCTION EASEMENT
TDH	TOTAL DYNAMIC HEAD
TELE.	TELEPHONE
TEMP.	TEMPORARY
THK	THICK
TNT	NAVAJO TRIBAL TRUST
T.O.	TOP OF
TRANS	TRANSFORMER
TW	TOP OF WALL
TYP	TYPICAL
UGE	UNDERGROUND ELECTRIC
USGS	UNITED STATES GEOLOGICAL SURVEY
V	VOLUME
VB	VACUUM BREAKER
VERT.	VERTICAL
VLV	VALVE
VR	VACUUM RELIEF
W	WATER
W	WEST
W/	WITH
WL	WATERLINE
WP	WORKING PRESSURE
WT	WALL THICKNESS
WV	WATER VALVE
YDS	YARDS
Z	ZENITH

LEGEND

EXISTING

- BUTTERFLY VALVE
- GATE VALVE
- WATER METER
- HYDRANT
- POWER POLE
- GUY ANCHOR
- ELECTRICAL J-BOX
- TELEPHONE PEDESTAL
- STORM DRAIN INLET / OUTLET
- BUILDING
- CATTLE GUARD
- ROAD SIGN
- BORE LOCATION
- EXISTING DRAINAGE WASH
- GUARD RAIL
- ROAD EDGE
- ROAD CENTER
- 6490 — CONTOUR MAJOR
- 6492 — CONTOUR MINOR
- SECTION CORNER
- 12 — SECTION NUMBER
- Tribal Trust/I.A./BLM — CURRENT LAND STATUS (OWNER)
- SECTION LINE
- QUARTER SECTION LINE
- TOWNSHIP / RANGE LINE
- AREA OF POTENTIAL EFFECT
- FEMA 100 YEAR FLOODPLAIN EXTENTS
- FENCE
- OHE — OVERHEAD POWER LINE
- UGE — UNDERGROUND POWER LINE
- TEL — OVERHEAD TELEPHONE LINE
- UGT — UNDERGROUND TELEPHONE LINE
- W — WATER LINE
- G — GAS LINE

LEGEND

- W — WATER LINE
- FENCE
- PIPE CASING
- BUTTERFLY VALVE
- VACUUM BREAKER / AIR RELEASE VALVE COMBO
- FLUSH VALVE
- DOUBLE SWING GATE
- DRAIN PIPE
- SWALE
- DIRECTION OF FLOW
- MATCH LINE
- 6965 — CONTOUR MAJOR
- 6964 — CONTOUR MINOR
- WATERLINE EASEMENT
- TEMPORARY CONSTRUCTION EASEMENT
- ACCESS DRIVE / ROAD
- RIP RAP
- GRAVEL OVER BASE COURSE

TORY T. TADANO — NEW MEXICO — 21073 — LICENSED PROFESSIONAL ENGINEER — 11/28/18

RECLAMATION — Managing Water in the West

SMA — Engineering • Environmental • Surveying

ALWAYS THINK SAFETY

U.S. DEPARTMENT OF THE INTERIOR
BUREAU OF RECLAMATION
NAVAJO-GALLUP WATER SUPPLY PROJECT
NEW MEXICO

CUTTER LATERAL - REACH 21

WATER PIPELINE

NO.	DATE	REVISION	BY	APV'D
0	12/10/2018	ISSUED FOR CONSTRUCTION	TT	JG

T Tadano — DESIGNED
M Howard / A Vogenthaler — DRAWN
J Garcia — CHECKED
TECH. APPR.
APPROVED — ADMIN APPROVAL - TITLE

FARMINGTON, NM 2018-11-28

REACH 21 PIPELINE

GENERAL NOTES & LEGEND

800-G-0001

SHEET 353 OF 405

DATE AND TIME PLOTTED 11/28/18
PLOTTED BY aav

CAD SYSTEM AUTOCAD
CAD FILENAME Reach 21 Cover-Gen Notes.dwg

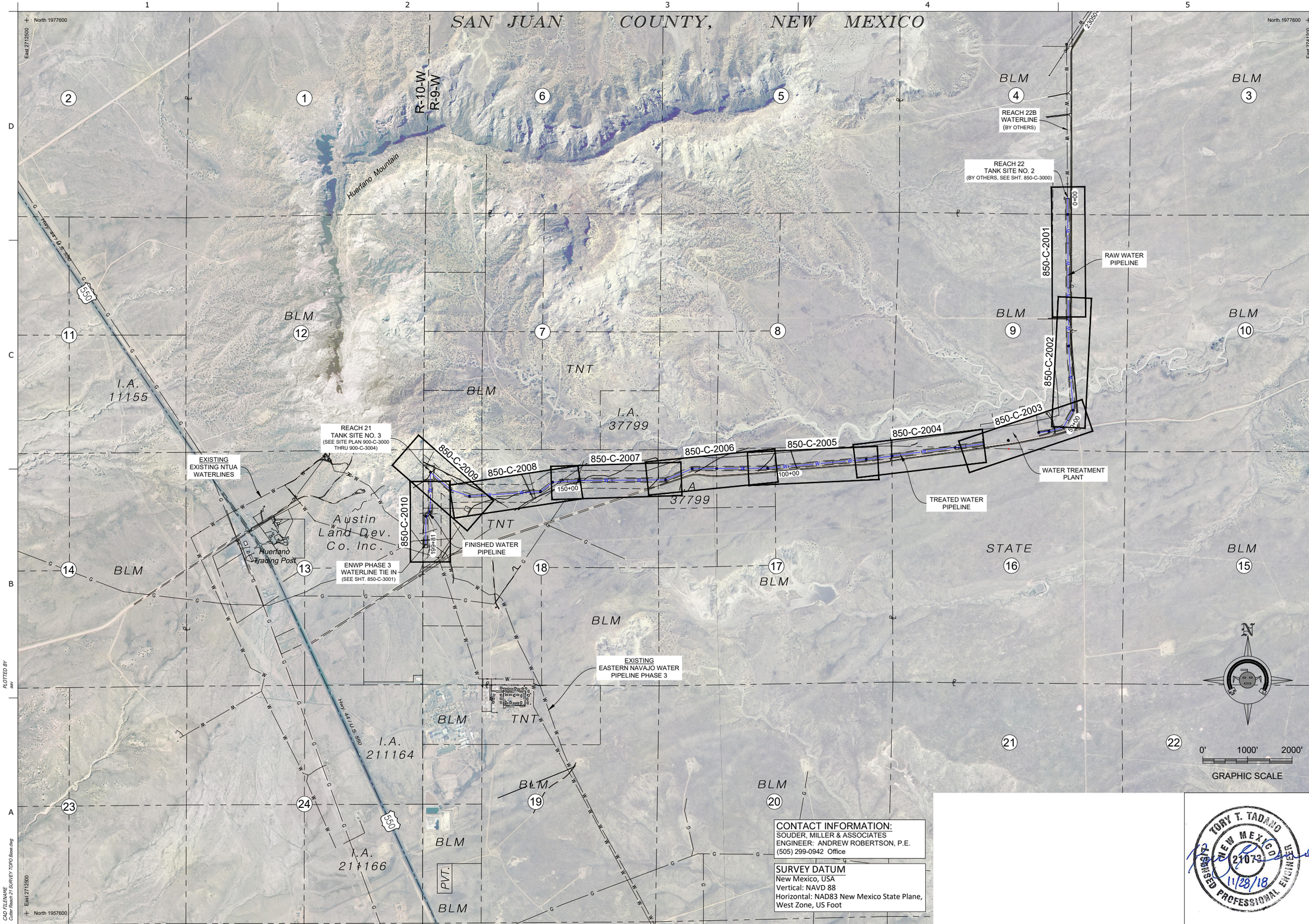

RECLAMATION
Managing Water in the West

SMA
Engineering • Environmental Surveying

ALWAYS THINK SAFETY

U.S. DEPARTMENT OF THE INTERIOR
BUREAU OF RECLAMATION
NAVAJO-GALLUP WATER SUPPLY PROJECT
NEW MEXICO

CUTTER LATERAL - REACH 21

WATER PIPELINE

NO.	DATE	REVISION	BY	APV'D
0	12/10/2018	ISSUED FOR CONSTRUCTION	TT	JG

T Tadano
DESIGNED
M Howard / A Vogenthaler
DRAWN
J Garcia
CHECKED
TECH. APPR.
APPROVED
ADMIN APPROVAL – TITLE

FARMINGTON, NM 2018-11-28

REACH 21 PIPELINE

PROJECT SITE PLAN AND DRAWING KEY INDEX

800-G-0002

SHEET 354 OF 405

TORY T. TADANO
NEW MEXICO
21073
LICENSED PROFESSIONAL ENGINEER
11/28/18

CONTACT INFORMATION:
SOUDER, MILLER & ASSOCIATES
ENGINEER: ANDREW ROBERTSON, P.E.
(505) 299-0942 Office

SURVEY DATUM
New Mexico, USA
Vertical: NAVD 88
Horizontal: NAD83 New Mexico State Plane, West Zone, US Foot

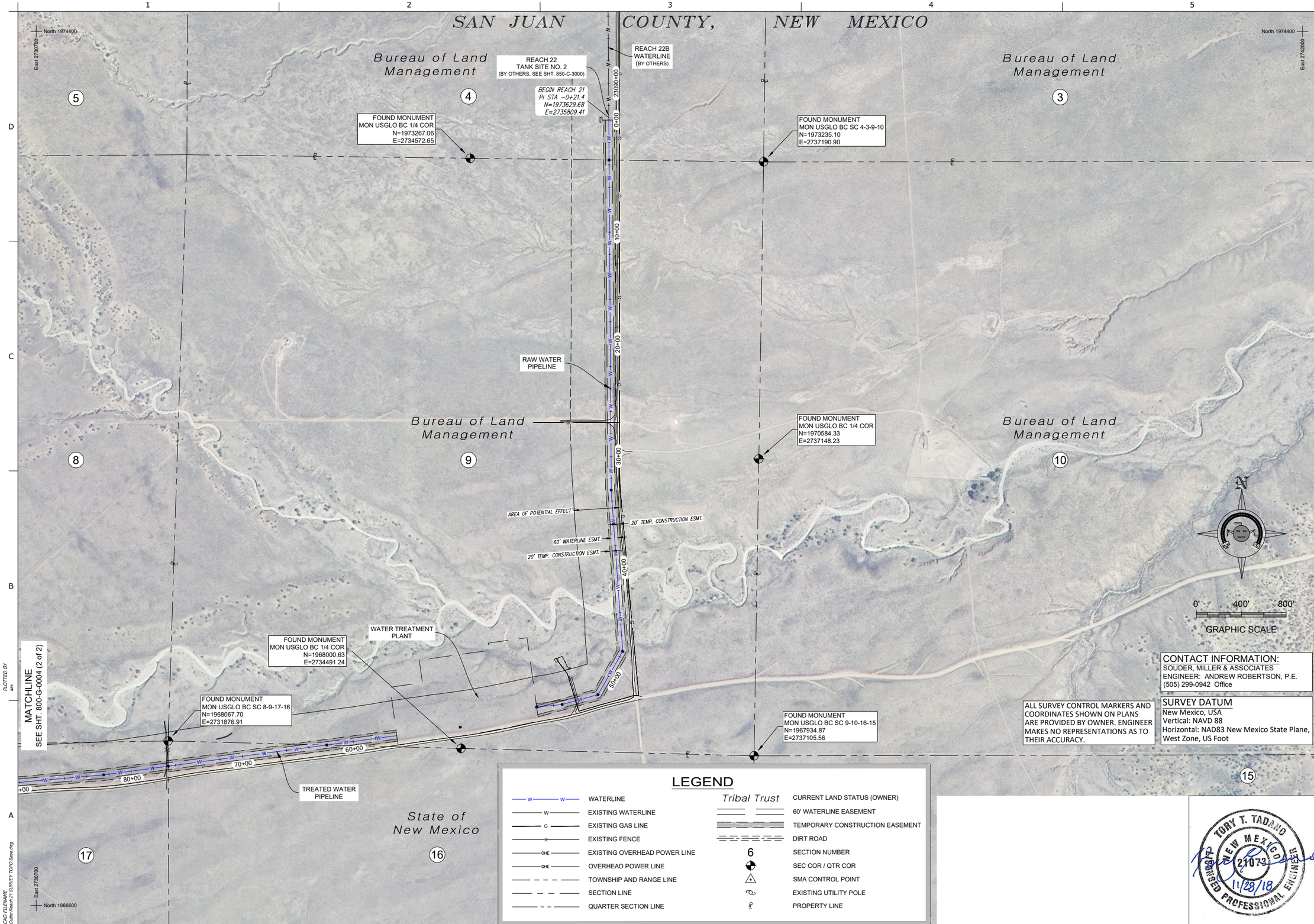

LEGEND

W W	WATERLINE	Tribal Trust	CURRENT LAND STATUS (OWNER)
W	EXISTING WATERLINE		60' WATERLINE EASEMENT
G	EXISTING GAS LINE		TEMPORARY CONSTRUCTION EASEMENT
X	EXISTING FENCE		DIRT ROAD
OHE	EXISTING OVERHEAD POWER LINE	6	SECTION NUMBER
OHE	OVERHEAD POWER LINE		SEC COR / QTR COR
	TOWNSHIP AND RANGE LINE		SMA CONTROL POINT
	SECTION LINE		EXISTING UTILITY POLE
	QUARTER SECTION LINE	℄	PROPERTY LINE

ALL SURVEY CONTROL MARKERS AND COORDINATES SHOWN ON PLANS ARE PROVIDED BY OWNER. ENGINEER MAKES NO REPRESENTATIONS AS TO THEIR ACCURACY.

SURVEY DATUM
New Mexico, USA
Vertical: NAVD 88
Horizontal: NAD83 New Mexico State Plane, West Zone, US Foot

CONTACT INFORMATION:
SOUDER, MILLER & ASSOCIATES
ENGINEER: ANDREW ROBERTSON, P.E.
(505) 299-0942 Office

TORY T. TADANO
NEW MEXICO
21073
LICENSED PROFESSIONAL ENGINEER
11/28/18

RECLAMATION
Managing Water in the West

SMA
Engineering • Environmental Surveying

ALWAYS THINK SAFETY

U.S. DEPARTMENT OF THE INTERIOR
BUREAU OF RECLAMATION
NAVAJO-GALLUP WATER SUPPLY PROJECT
NEW MEXICO

CUTTER LATERAL - REACH 21

WATER PIPELINE

NO.	DATE	REVISION	BY	APVD
0	12/10/2018	ISSUED FOR CONSTRUCTION	TT	JG

T Tadano
DESIGNED
M Howard / A Vogenthaler
DRAWN
J Garcia
CHECKED
TECH. APPR.
APPROVED
ADMIN APPROVAL TITLE

FARMINGTON, NM 2018-11-28

REACH 21 PIPELINE

SURVEY CONTROL PLAN (1 OF 2)

800-G-0003

SHEET 355 OF 405

DATE AND TIME PLOTTED 11/28/18
PLOTTED BY aav
CAD SYSTEM AUTOCAD
CAD FILENAME Cutter Reach 21 SURVEY TOPO Base.dwg

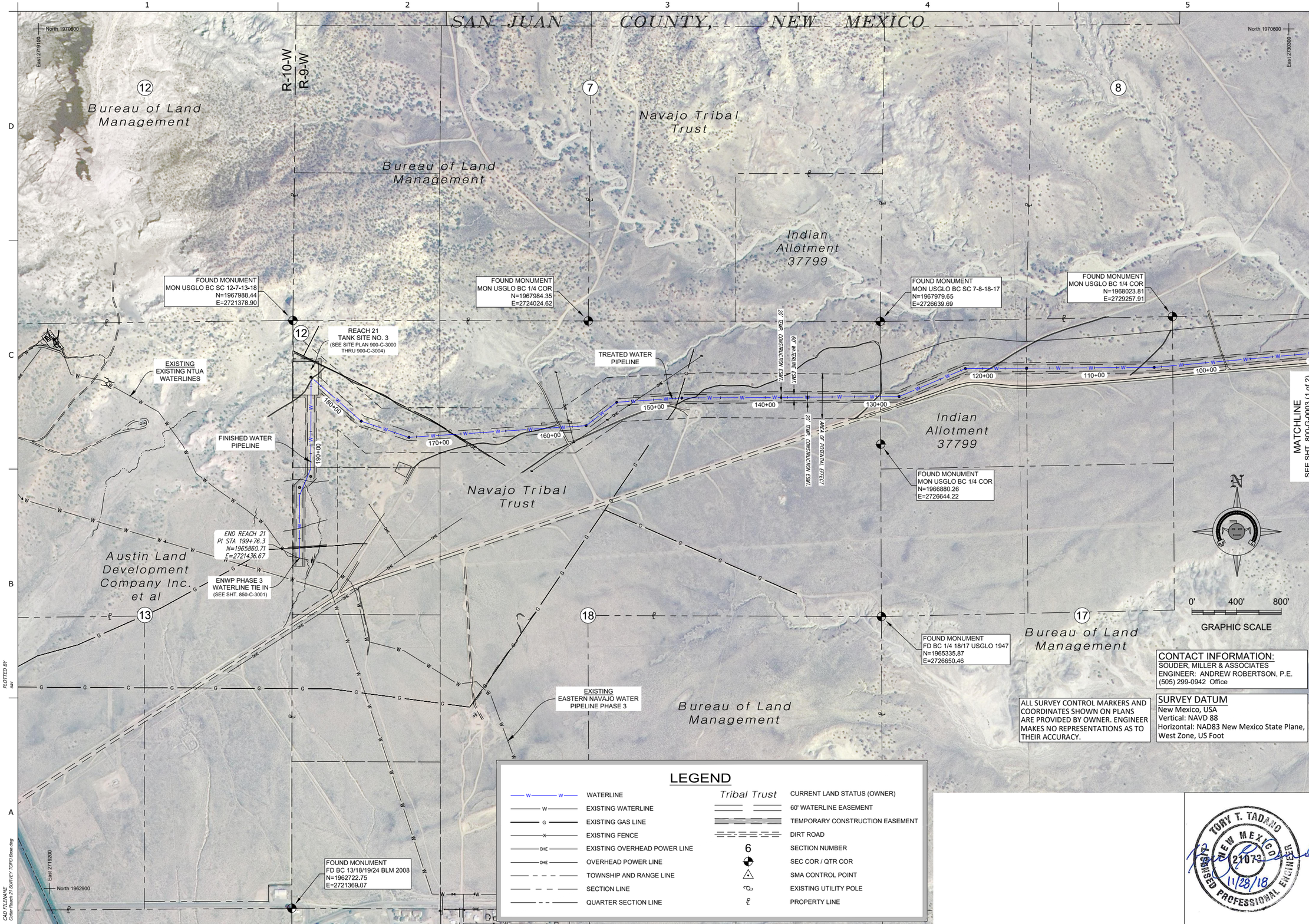

RECLAMATION
Managing Water in the West

SMA
Engineering • Environmental Surveying

ALWAYS THINK SAFETY

U.S. DEPARTMENT OF THE INTERIOR
BUREAU OF RECLAMATION
NAVAJO-GALLUP WATER SUPPLY PROJECT
NEW MEXICO

CUTTER LATERAL - REACH 21

WATER PIPELINE

NO.	DATE	REVISION	BY	APV'D
0	12/10/2018	ISSUED FOR CONSTRUCTION	TT	JG

T Tadano
DESIGNED
M Howard / A Vogenthaler
DRAWN
J Garcia
CHECKED
TECH. APPR.
APPROVED
ADMIN APPROVAL - TITLE

FARMINGTON, NM 2018-11-28

REACH 21 PIPELINE

SURVEY CONTROL PLAN (2 OF 2)

800-G-0004

SHEET 356 OF 405

DATE AND TIME PLOTTED 1/28/18
PLOTTED BY aav
CAD SYSTEM AUTOCAD
CAD FILENAME Cutter Reach 21 SURVEY TOPO Base.dwg

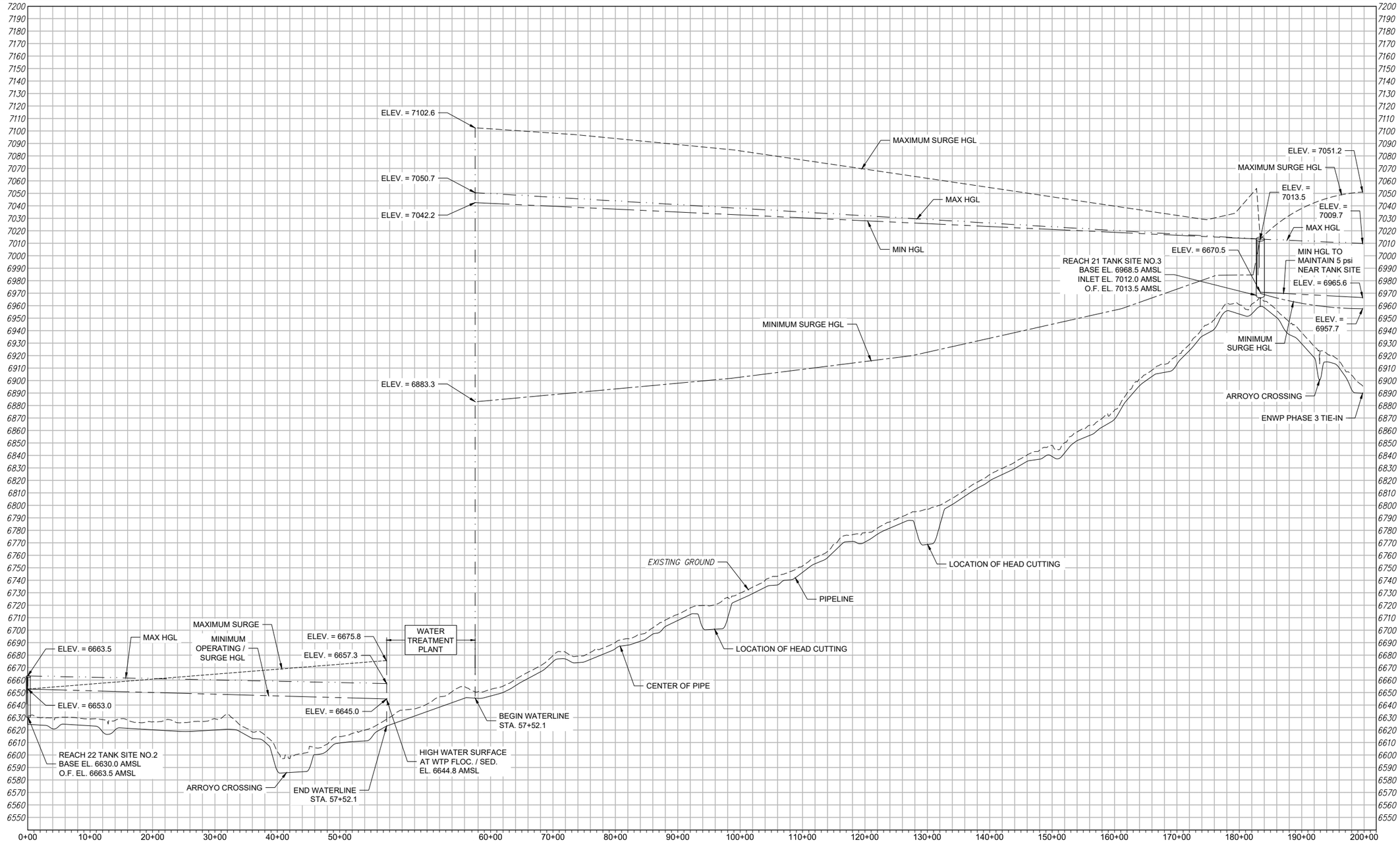

STA. −00+21 TO 199+76
PHASE 2 FLOW RATE 5.39 MGD

LEGEND

- EXISTING GRADE AT ALIGNMENT CENTERLINE
- REACH 21 WATERLINE
- MAXIMUM SURGE HGL
- MINIMUM SURGE HGL
- MAXIMUM HGL
- MINIMUM HGL
- WATER STORAGE TANK

RECLAMATION
Managing Water in the West

SMA
Engineering • Environmental Surveying

ALWAYS THINK SAFETY

U.S. DEPARTMENT OF THE INTERIOR
BUREAU OF RECLAMATION
NAVAJO-GALLUP WATER SUPPLY PROJECT
NEW MEXICO

CUTTER LATERAL - REACH 21

WATER PIPELINE

NO.	DATE	REVISION	BY	APV'D
0	12/10/2018	ISSUED FOR CONSTRUCTION	TT	JG

T Tadano
DESIGNED
M Howard / A Vogenthaler
DRAWN
J Garcia
CHECKED
TECH. APPR.
APPROVED
ADMIN APPROVAL - TITLE

FARMINGTON, NM 2018-11-28

REACH 21 PIPELINE

HYDRAULIC PROFILE

800-G-0005

SHEET 357 OF 405

TONY T. TADANO
NEW MEXICO
21073
11/28/18
LICENSED PROFESSIONAL ENGINEER

DATE AND TIME PLOTTED 11/28/18
PLOTTED BY atv

CAD SYSTEM AUTOCAD
CAD FILENAME Reach 21 Hydraulic Profile.dwg

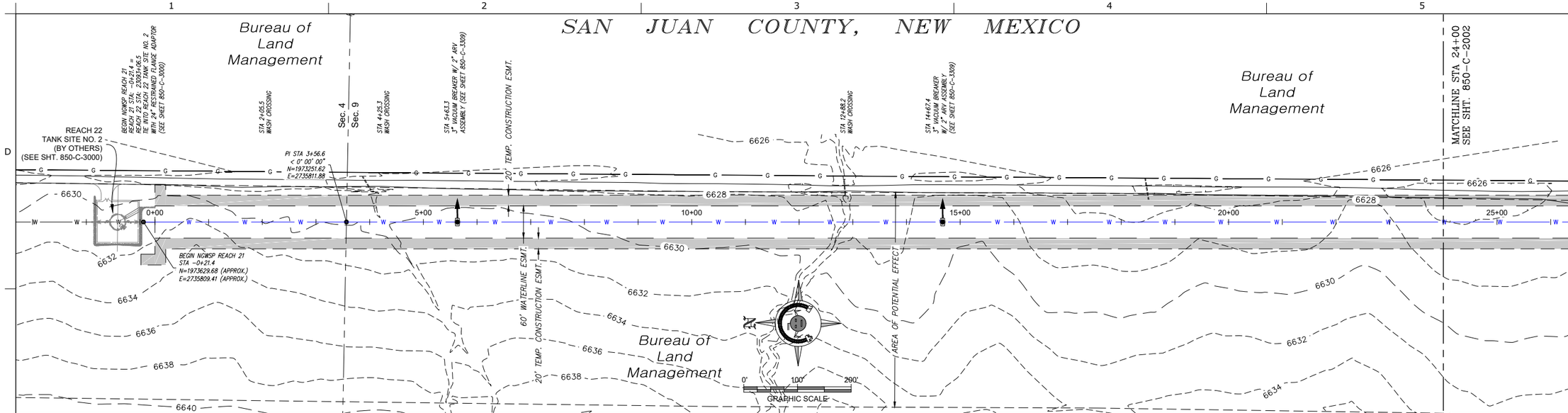

PLAN VIEW
24" WATERLINE

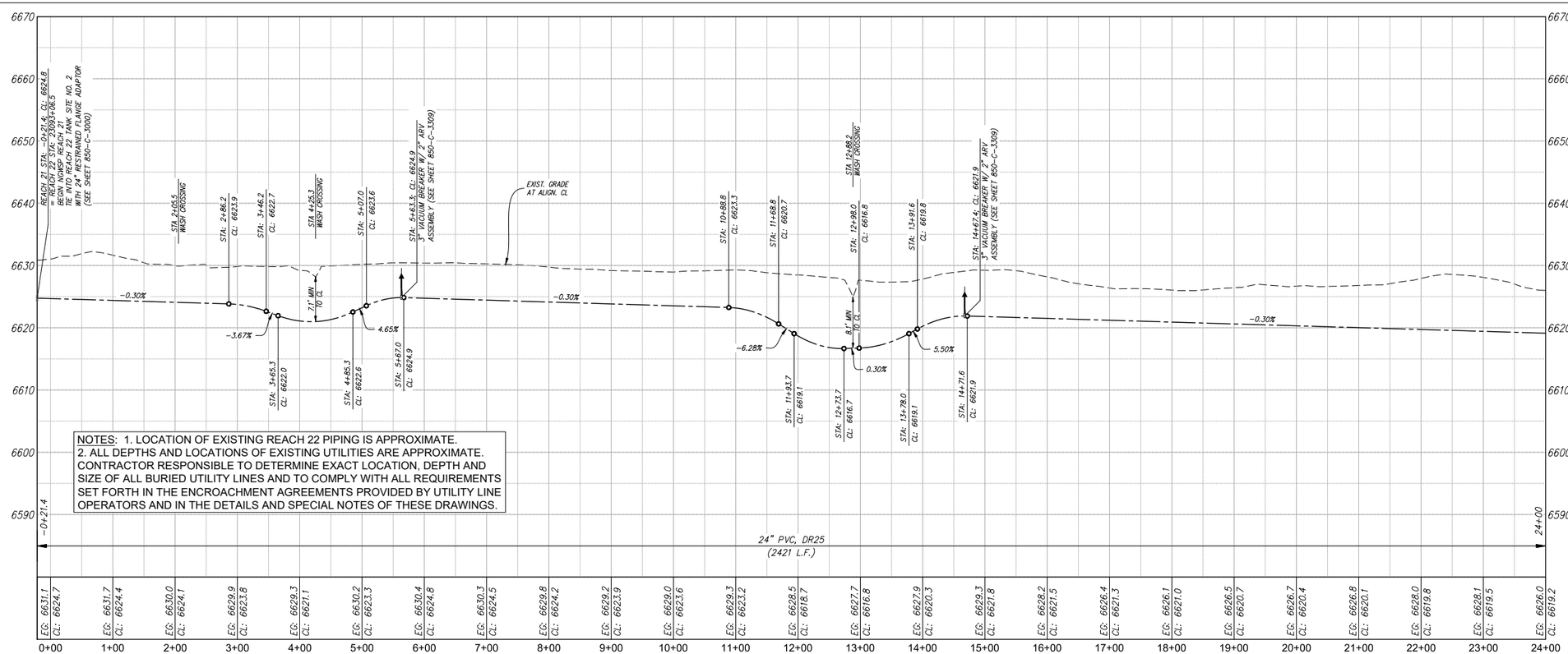

NOTES: 1. LOCATION OF EXISTING REACH 22 PIPING IS APPROXIMATE.
2. ALL DEPTHS AND LOCATIONS OF EXISTING UTILITIES ARE APPROXIMATE. CONTRACTOR RESPONSIBLE TO DETERMINE EXACT LOCATION, DEPTH AND SIZE OF ALL BURIED UTILITY LINES AND TO COMPLY WITH ALL REQUIREMENTS SET FORTH IN THE ENCROACHMENT AGREEMENTS PROVIDED BY UTILITY LINE OPERATORS AND IN THE DETAILS AND SPECIAL NOTES OF THESE DRAWINGS.

PROFILE VIEW 24" WATERLINE
SCALE: HORIZ. 1" = 200' ; VERT. 1" = 20'

RECLAMATION Managing Water in the West

SMA Engineering • Environmental Surveying

ALWAYS THINK SAFETY

U.S. DEPARTMENT OF THE INTERIOR
BUREAU OF RECLAMATION
NAVAJO-GALLUP WATER SUPPLY PROJECT
NEW MEXICO

CUTTER LATERAL - REACH 21

WATER PIPELINE

NO.	DATE	REVISION	BY	APV'D
0	12/10/2018	ISSUED FOR CONSTRUCTION	TT	JG

T Tadano — DESIGNED
M Howard / A Vogenthaler — DRAWN
J Garcia — CHECKED
TECH. APPR.
APPROVED — ADMIN APPROVAL / TITLE
FARMINGTON, NM 2018-11-28

TORY T. TADANO — NEW MEXICO — 21073 — LICENSED PROFESSIONAL ENGINEER — 11/28/18

REACH 21 PIPELINE

PLAN & PROFILE
STA -0+21.4 To 24+00

850-C-2001

SHEET 358 OF 405

DATE AND TIME PLOTTED 11/28/18
PLOTTED BY aav
CAD SYSTEM AUTOCAD
CAD FILENAME Reach 21 Pl+Pr.dwg

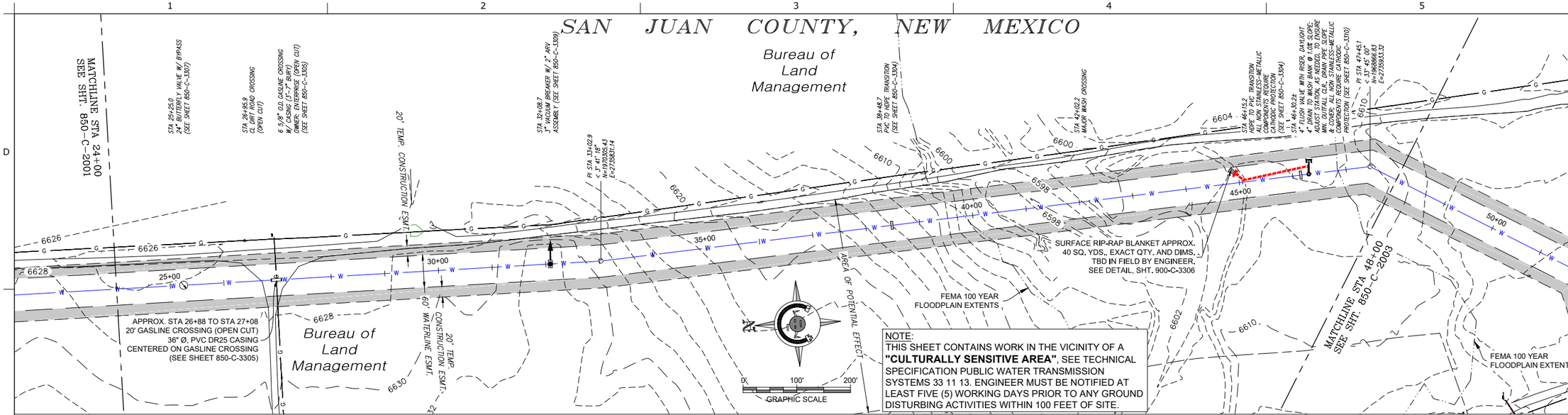

NOTE:
THIS SHEET CONTAINS WORK IN THE VICINITY OF A **"CULTURALLY SENSITIVE AREA"**, SEE TECHNICAL SPECIFICATION PUBLIC WATER TRANSMISSION SYSTEMS 33 11 13. ENGINEER MUST BE NOTIFIED AT LEAST FIVE (5) WORKING DAYS PRIOR TO ANY GROUND DISTURBING ACTIVITIES WITHIN 100 FEET OF SITE.

PLAN VIEW
24" WATERLINE

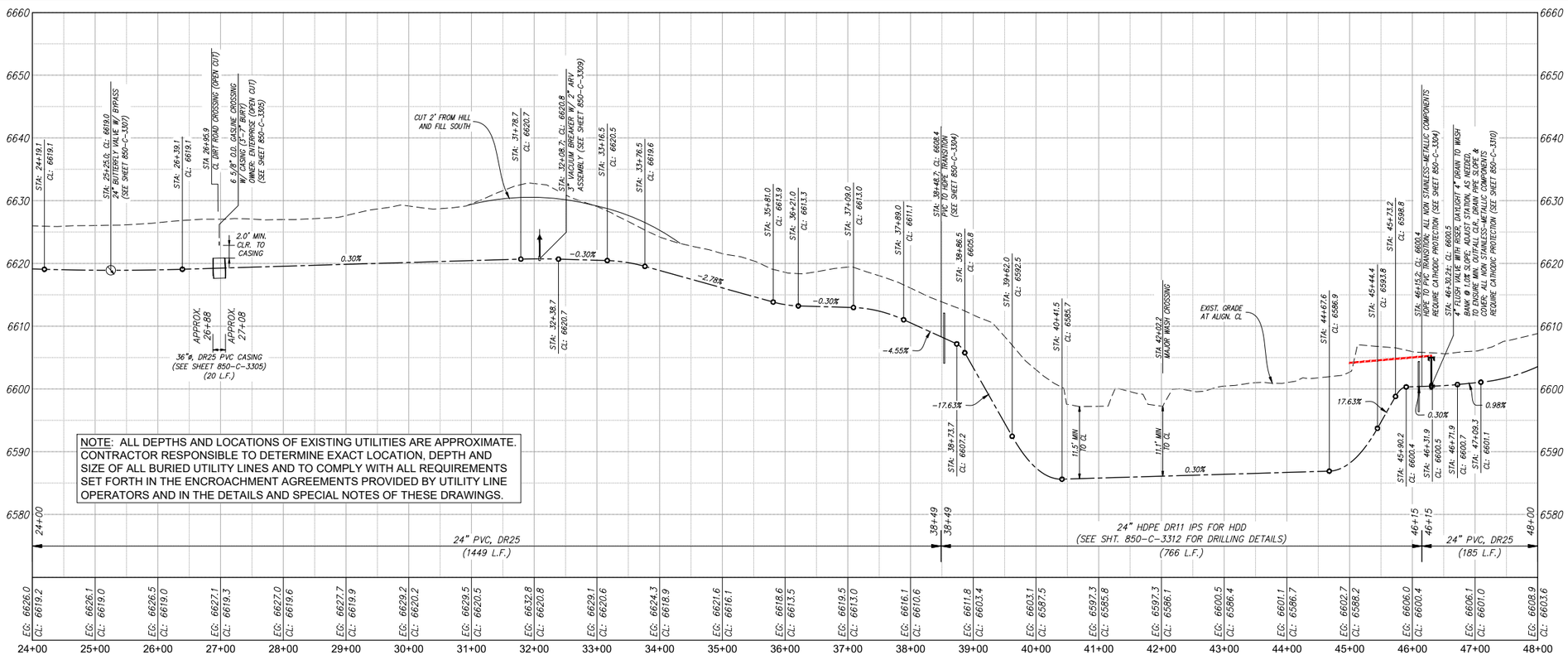

NOTE: ALL DEPTHS AND LOCATIONS OF EXISTING UTILITIES ARE APPROXIMATE. CONTRACTOR RESPONSIBLE TO DETERMINE EXACT LOCATION, DEPTH AND SIZE OF ALL BURIED UTILITY LINES AND TO COMPLY WITH ALL REQUIREMENTS SET FORTH IN THE ENCROACHMENT AGREEMENTS PROVIDED BY UTILITY LINE OPERATORS AND IN THE DETAILS AND SPECIAL NOTES OF THESE DRAWINGS.

PROFILE VIEW 24" WATERLINE
SCALE: HORIZ. 1" = 200' ; VERT. 1" = 20'

RECLAMATION
Managing Water in the West

SMA
Engineering • Environmental Surveying

ALWAYS THINK SAFETY

U.S. DEPARTMENT OF THE INTERIOR
BUREAU OF RECLAMATION
NAVAJO-GALLUP WATER SUPPLY PROJECT
NEW MEXICO

CUTTER LATERAL - REACH 21

WATER PIPELINE

NO.	DATE	REVISION	BY	APVD
0	12/10/2018	ISSUED FOR CONSTRUCTION	TT	JG

T Tadano
DESIGNED
M Howard / A Vogenthaler
DRAWN
J Garcia
CHECKED
TECH. APPR.
APPROVED
FARMINGTON, NM 2018-11-28

TORY T. TADANO
NEW MEXICO
21073
11/28/18
REGISTERED PROFESSIONAL ENGINEER

REACH 21 PIPELINE

PLAN & PROFILE
STA 24+00 To 48+00

850-C-2002

SHEET 359 OF 405

DATE AND TIME PLOTTED 11/28/18
PLOTTED BY aarr
CAD SYSTEM AUTOCAD
CAD FILENAME Reach 21 PnP5.dwg

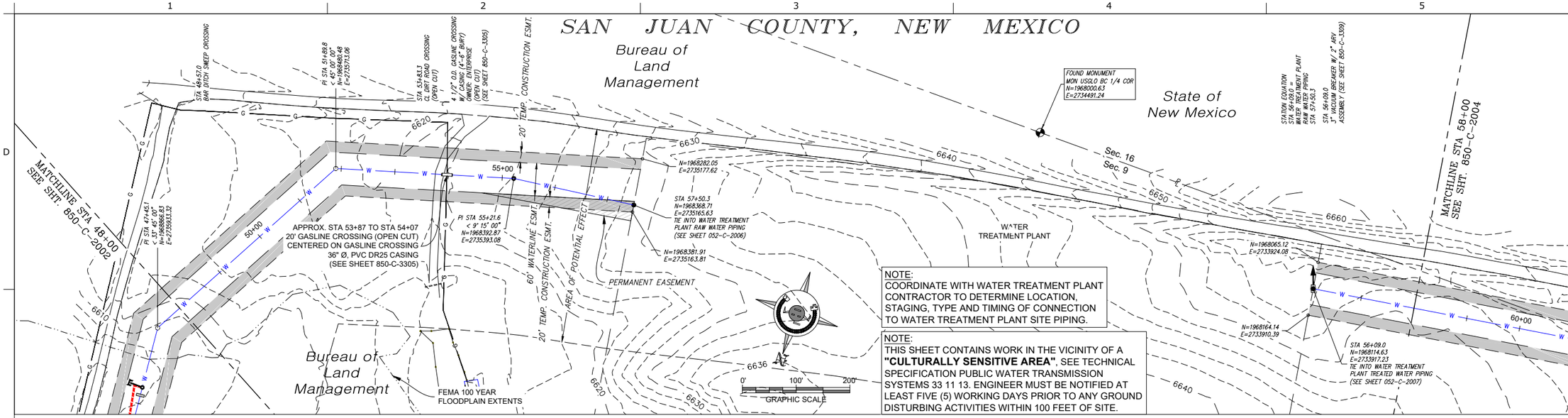

NOTE:
COORDINATE WITH WATER TREATMENT PLANT CONTRACTOR TO DETERMINE LOCATION, STAGING, TYPE AND TIMING OF CONNECTION TO WATER TREATMENT PLANT SITE PIPING.

NOTE:
THIS SHEET CONTAINS WORK IN THE VICINITY OF A **"CULTURALLY SENSITIVE AREA"**, SEE TECHNICAL SPECIFICATION PUBLIC WATER TRANSMISSION SYSTEMS 33 11 13. ENGINEER MUST BE NOTIFIED AT LEAST FIVE (5) WORKING DAYS PRIOR TO ANY GROUND DISTURBING ACTIVITIES WITHIN 100 FEET OF SITE.

PLAN VIEW
24" & 20" WATERLINE

NOTE: ALL DEPTHS AND LOCATIONS OF EXISTING UTILITIES ARE APPROXIMATE. CONTRACTOR RESPONSIBLE TO DETERMINE EXACT LOCATION, DEPTH AND SIZE OF ALL BURIED UTILITY LINES AND TO COMPLY WITH ALL REQUIREMENTS SET FORTH IN THE ENCROACHMENT AGREEMENTS PROVIDED BY UTILITY LINE OPERATORS AND IN THE DETAILS AND SPECIAL NOTES OF THESE DRAWINGS.

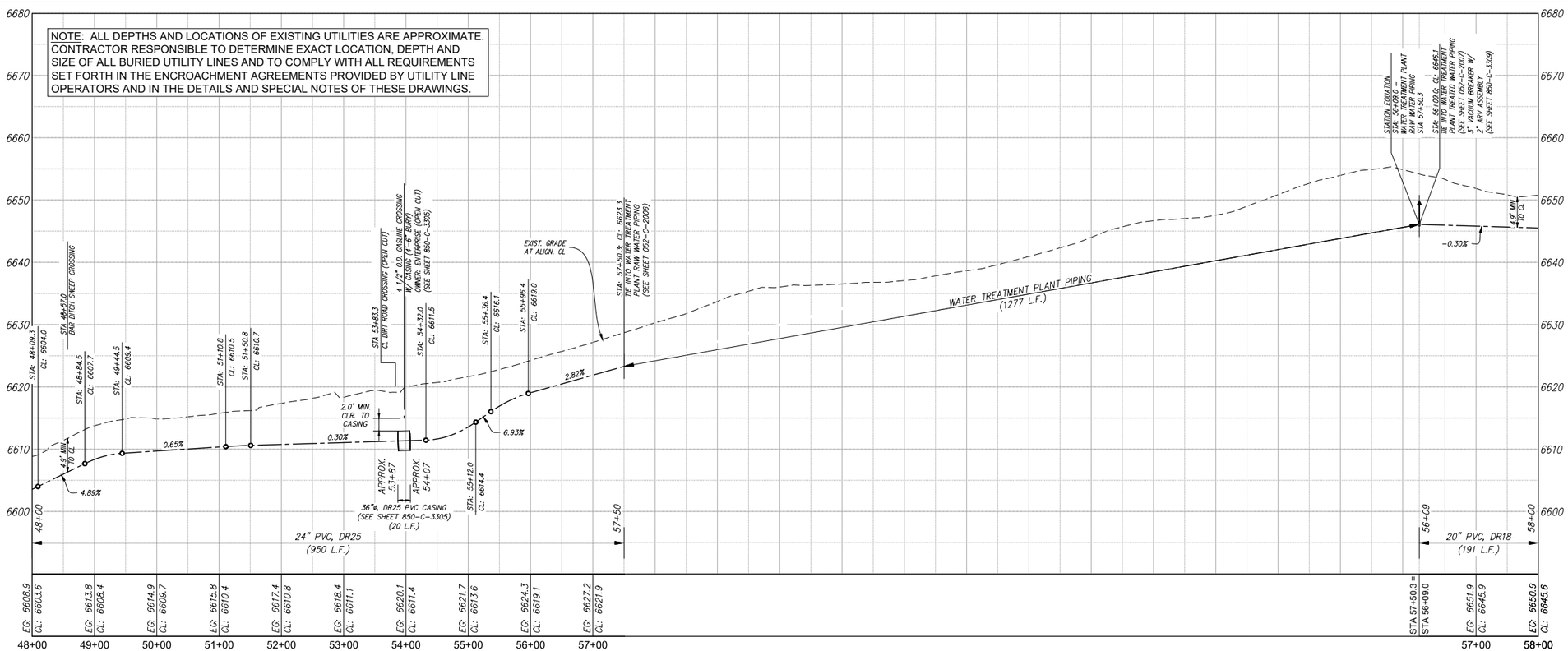

PROFILE VIEW 24" & 20" WATERLINE
SCALE: HORIZ. 1" = 200' ; VERT. 1" = 20'

RECLAMATION
Managing Water in the West

SMA
Engineering • Environmental • Surveying

ALWAYS THINK SAFETY

U.S. DEPARTMENT OF THE INTERIOR
BUREAU OF RECLAMATION
NAVAJO-GALLUP WATER SUPPLY PROJECT
NEW MEXICO

CUTTER LATERAL - REACH 21

WATER PIPELINE

NO.	DATE	REVISION	BY	APV'D
0	12/10/2018	ISSUED FOR CONSTRUCTION	TT	JG

T Tadano
DESIGNED
M Howard / A Vogenthaler
DRAWN
J Garcia
CHECKED
TECH. APPR.
APPROVED
ADMIN APPROVAL – TITLE

FARMINGTON, NM 2018-11-28

TORY T. TADANO
NEW MEXICO
21073
11/28/18
LICENSED PROFESSIONAL ENGINEER

REACH 21 PIPELINE

PLAN & PROFILE
STA 48+00 To 58+00

850-C-2003

SHEET 360 OF 405

DATE AND TIME PLOTTED 11/28/18
PLOTTED BY aav

CAD SYSTEM AUTOCAD
CAD FILENAME Reach 21 PnPs.dwg

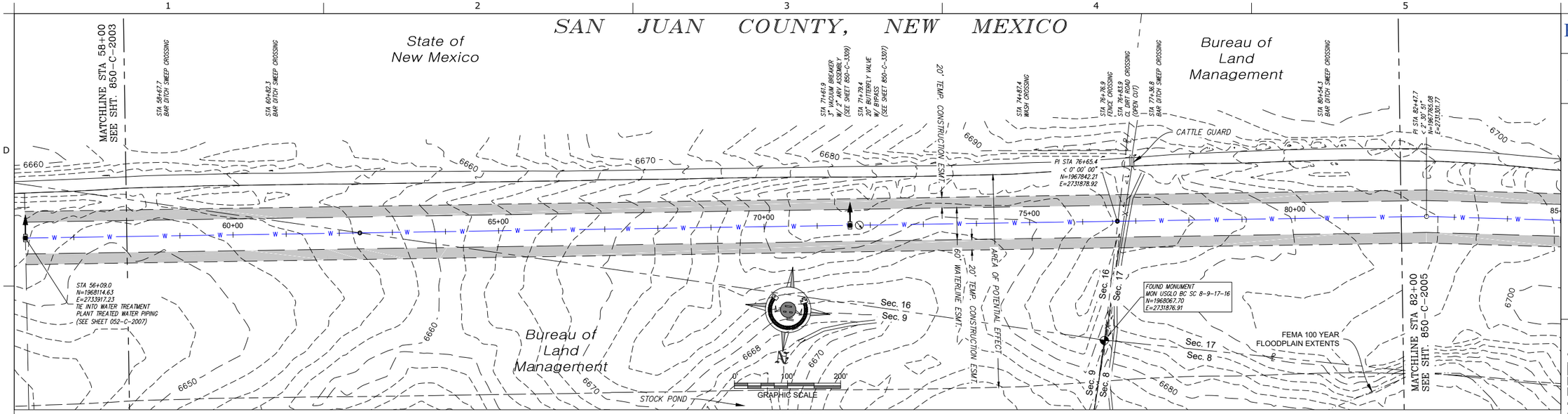

PLAN VIEW
20" WATERLINE

NOTE: ALL DEPTHS AND LOCATIONS OF EXISTING UTILITIES ARE APPROXIMATE. CONTRACTOR RESPONSIBLE TO DETERMINE EXACT LOCATION, DEPTH AND SIZE OF ALL BURIED UTILITY LINES AND TO COMPLY WITH ALL REQUIREMENTS SET FORTH IN THE ENCROACHMENT AGREEMENTS PROVIDED BY UTILITY LINE OPERATORS AND IN THE DETAILS AND SPECIAL NOTES OF THESE DRAWINGS.

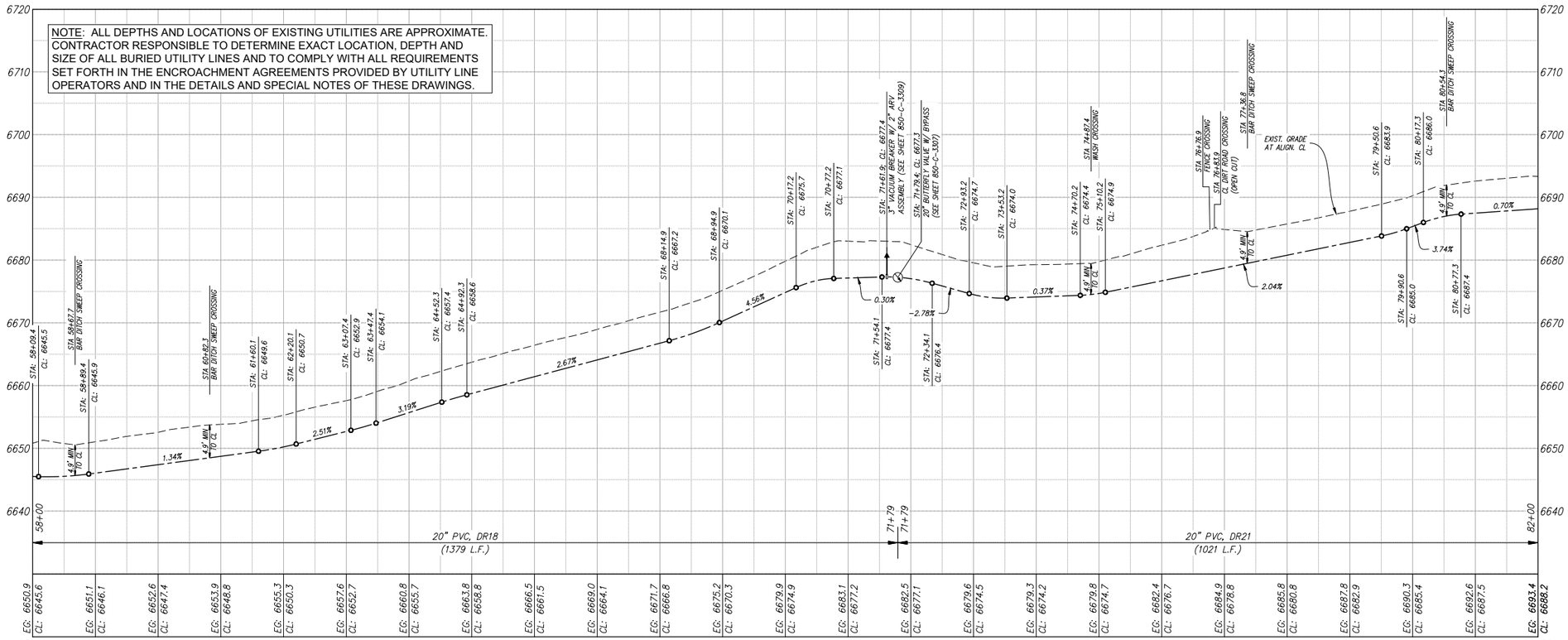

PROFILE VIEW 20" WATERLINE
SCALE: HORIZ. 1" = 200' ; VERT. 1" = 20'

RECLAMATION
Managing Water in the West

SMA
Engineering • Environmental • Surveying

ALWAYS THINK SAFETY

U.S. DEPARTMENT OF THE INTERIOR
BUREAU OF RECLAMATION
NAVAJO-GALLUP WATER SUPPLY PROJECT
NEW MEXICO

CUTTER LATERAL - REACH 21

WATER PIPELINE

NO.	DATE	REVISION	BY	APV'D
0	12/10/2018	ISSUED FOR CONSTRUCTION	TT	JG

T Tadano
DESIGNED
M Howard / A Vogenthaler
DRAWN
J Garcia
CHECKED
TECH. APPR.
APPROVED
SUPER. ENGINEERING - TITLE

FARMINGTON, NM 2018-11-28

TORY T. TADANO
NEW MEXICO
21073
LICENSED PROFESSIONAL ENGINEER
11/28/18

REACH 21 PIPELINE

PLAN & PROFILE
STA 58+00 To 82+00

850-C-2004

SHEET 361 OF 405

DATE AND TIME PLOTTED 11/28/18
PLOTTED BY aav

CAD SYSTEM AUTOCAD
CAD FILENAME Reach 21 PnP's.dwg

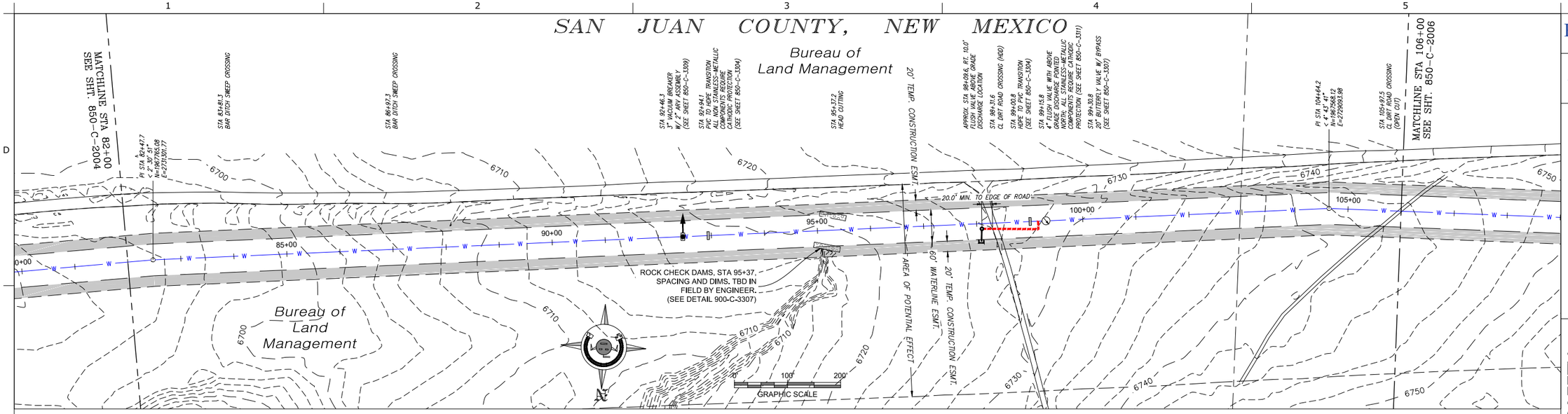

PLAN VIEW
20" WATERLINE

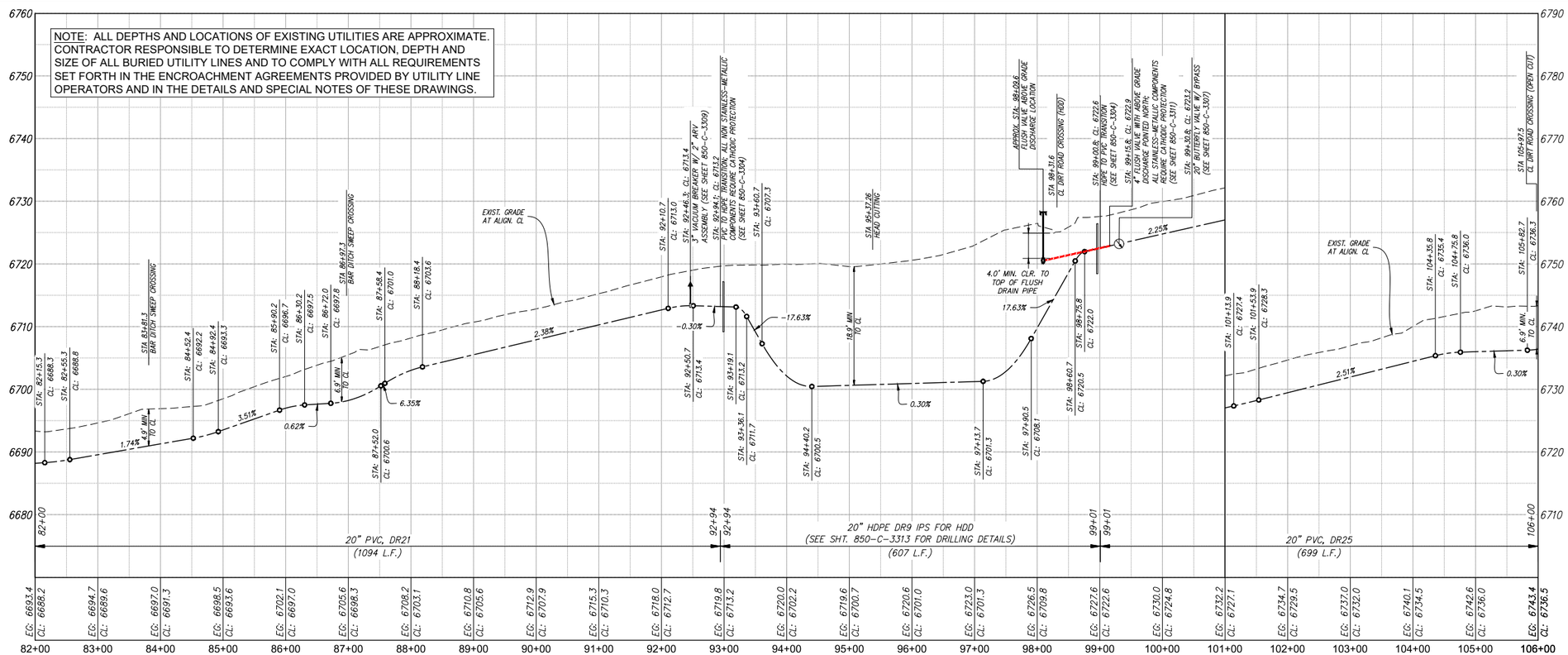

PROFILE VIEW 20" WATERLINE
SCALE: HORIZ. 1" = 200' ; VERT. 1" = 20'

RECLAMATION
Managing Water in the West

SMA
Engineering • Environmental Surveying

ALWAYS THINK SAFETY

U.S. DEPARTMENT OF THE INTERIOR
BUREAU OF RECLAMATION
NAVAJO-GALLUP WATER SUPPLY PROJECT
NEW MEXICO

CUTTER LATERAL - REACH 21

WATER PIPELINE

NO.	DATE	REVISION	BY	APV'D
0	12/10/2018	ISSUED FOR CONSTRUCTION	TT	JG

T Tadano
DESIGNED
M Howard / A Vogenthaler
DRAWN
J Garcia
CHECKED
TECH. APPR.
APPROVED
SUPPLY DIVISIONAL - TITLE
FARMINGTON, NM 2018-11-28

TORY T. TADANO
NEW MEXICO
21073
REGISTERED PROFESSIONAL ENGINEER
12/10/18

REACH 21 PIPELINE

PLAN & PROFILE STA 82+00 To 106+00

850-C-2005

SHEET 362 OF 405

DATE AND TIME PLOTTED 11/28/18
PLOTTED BY aav

CAD SYSTEM AUTOCAD
CAD FILENAME Reach 21 PnPs.dwg

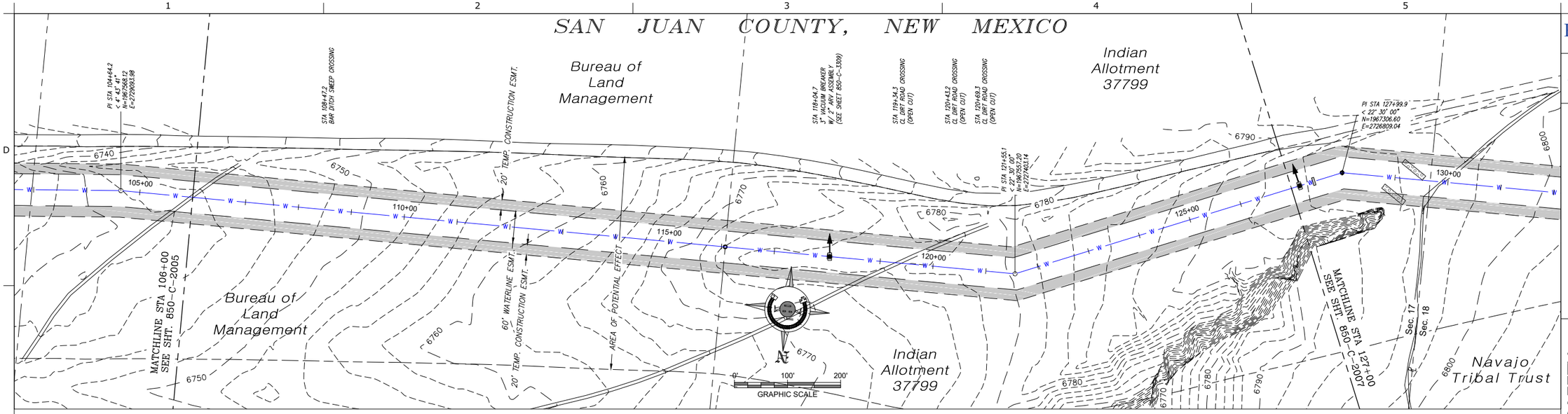

PLAN VIEW
20" WATERLINE

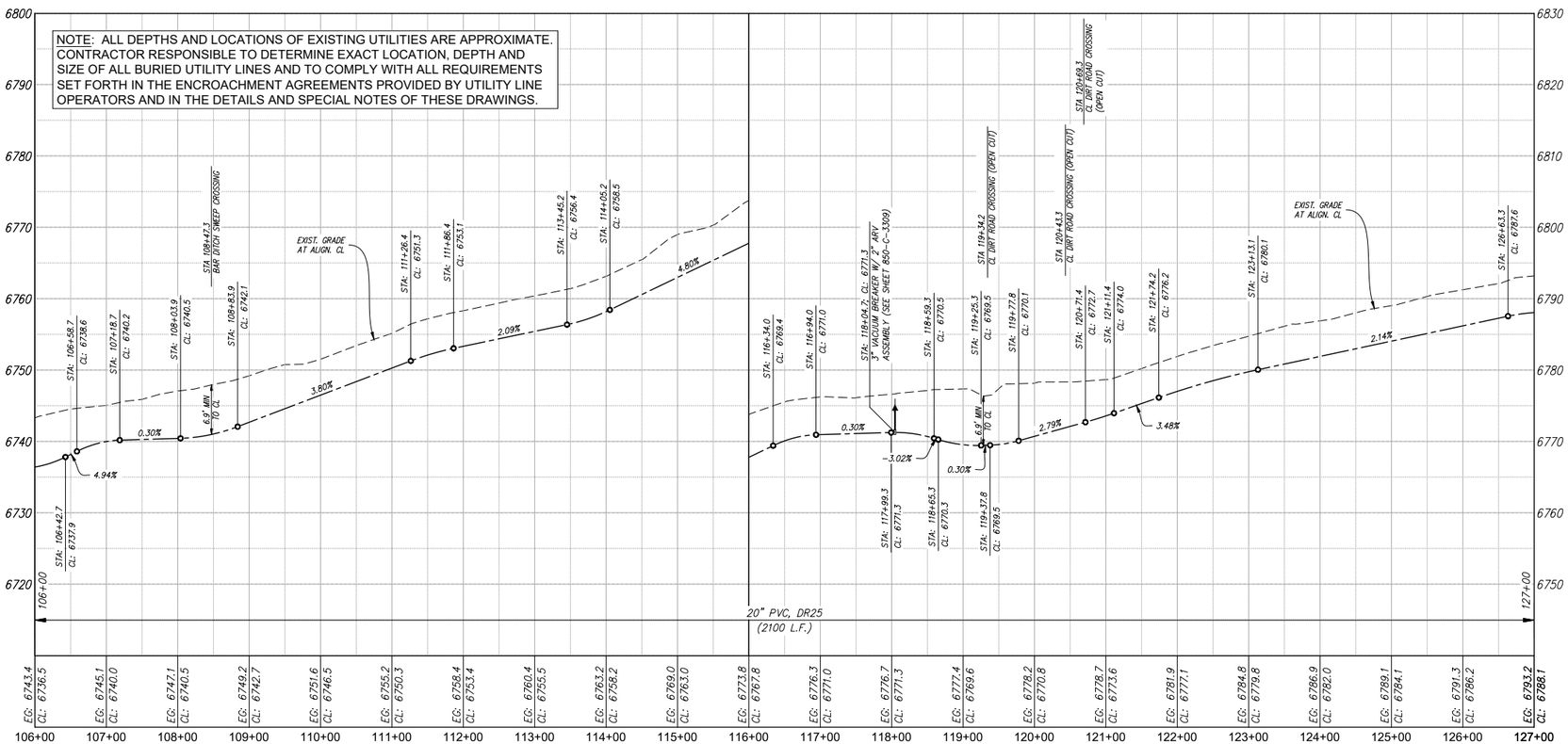

PROFILE VIEW 20" WATERLINE
SCALE: HORIZ. 1" = 200' ; VERT. 1" = 20'

RECLAMATION
Managing Water in the West

SMA
Engineering • Environmental Surveying

ALWAYS THINK SAFETY

U.S. DEPARTMENT OF THE INTERIOR
BUREAU OF RECLAMATION
NAVAJO-GALLUP WATER SUPPLY PROJECT
NEW MEXICO

CUTTER LATERAL - REACH 21

WATER PIPELINE

NO.	DATE	REVISION	BY	APVD
0	12/10/2018	ISSUED FOR CONSTRUCTION	TT	JG

T Tadano
DESIGNED
M Howard / A Vogenthaler
DRAWN
J Garcia
CHECKED
TECH. APPR.
APPROVED
ADMIN APPROVAL – TITLE
FARMINGTON, NM 2018-11-28

TORY T. TADANO
NEW MEXICO
21073
LICENSED PROFESSIONAL ENGINEER
11/28/18

REACH 21 PIPELINE

PLAN & PROFILE STA 106+00 To 127+00

850-C-2006

SHEET 363 OF 405

DATE AND TIME PLOTTED 11/28/18
PLOTTED BY aav

CAD SYSTEM AUTOCAD
CAD FILENAME Reach 21 PnP's.dwg

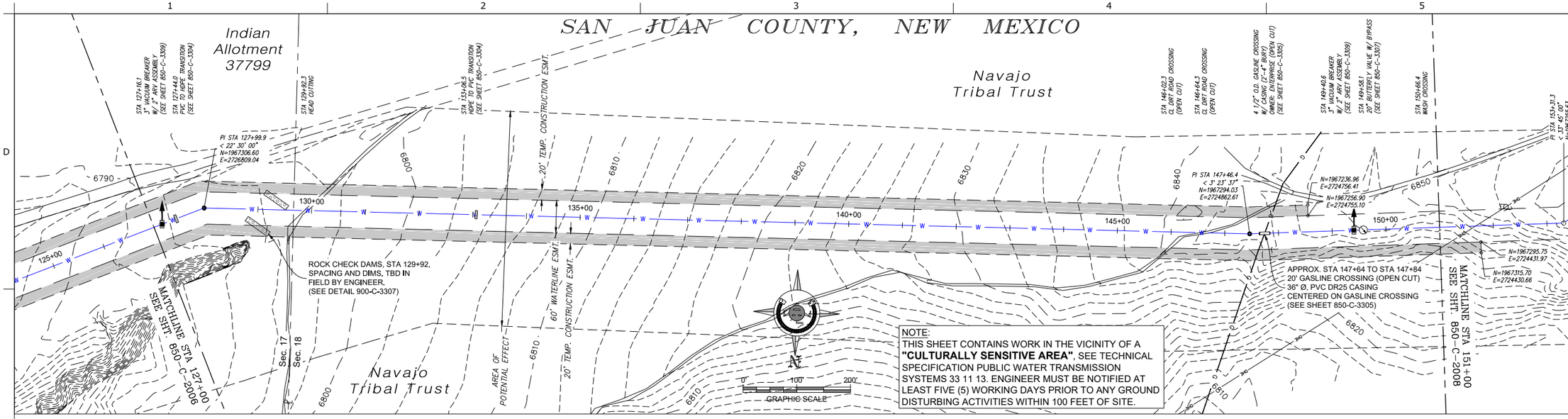

PLAN VIEW
20" WATERLINE

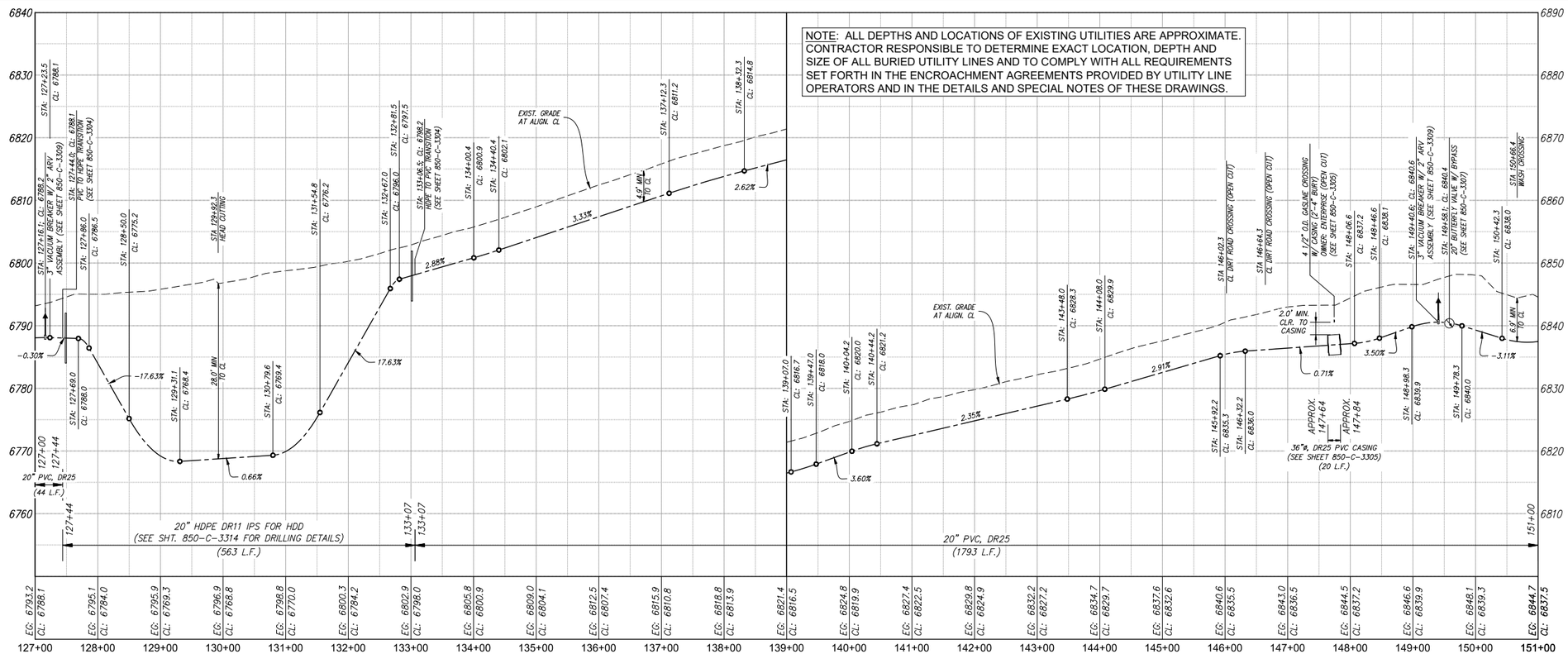

PROFILE VIEW 20" WATERLINE
SCALE: HORIZ. 1" = 200' ; VERT. 1" = 20'

RECLAMATION
Managing Water in the West

SMA
Engineering • Environmental Surveying

ALWAYS THINK SAFETY

U.S. DEPARTMENT OF THE INTERIOR
BUREAU OF RECLAMATION
NAVAJO-GALLUP WATER SUPPLY PROJECT
NEW MEXICO

CUTTER LATERAL - REACH 21

WATER PIPELINE

NO.	DATE	REVISION	BY	APVD
0	12/10/2018	ISSUED FOR CONSTRUCTION	TT	JG

T Tadano
DESIGNED
M Howard / A Vogenthaler
DRAWN
J Garcia
CHECKED
TECH. APPR.
APPROVED
- FOR OFFICIAL USE ONLY - TITLE

FARMINGTON, NM 2018-11-28

TORY T. TADANO
NEW MEXICO
21073
11/28/18
REGISTERED PROFESSIONAL ENGINEER

REACH 21 PIPELINE

PLAN & PROFILE STA 127+00 To 151+00

850-C-2007

SHEET 364 OF 405

DATE AND TIME PLOTTED 11/28/18
PLOTTED BY aav
CAD SYSTEM AUTOCAD
CAD FILENAME Reach 21 PnPs.dwg

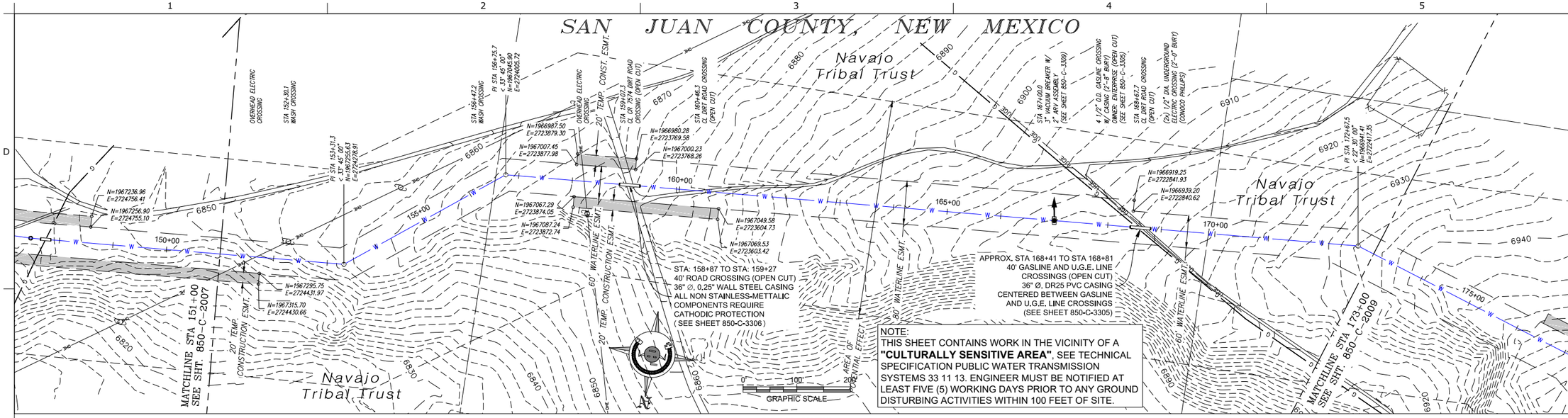

NOTE:
THIS SHEET CONTAINS WORK IN THE VICINITY OF A **"CULTURALLY SENSITIVE AREA"**, SEE TECHNICAL SPECIFICATION PUBLIC WATER TRANSMISSION SYSTEMS 33 11 13. ENGINEER MUST BE NOTIFIED AT LEAST FIVE (5) WORKING DAYS PRIOR TO ANY GROUND DISTURBING ACTIVITIES WITHIN 100 FEET OF SITE.

PLAN VIEW
20" WATERLINE

NOTE: ALL DEPTHS AND LOCATIONS OF EXISTING UTILITIES ARE APPROXIMATE. CONTRACTOR RESPONSIBLE TO DETERMINE EXACT LOCATION, DEPTH AND SIZE OF ALL BURIED UTILITY LINES AND TO COMPLY WITH ALL REQUIREMENTS SET FORTH IN THE ENCROACHMENT AGREEMENTS PROVIDED BY UTILITY LINE OPERATORS AND IN THE DETAILS AND SPECIAL NOTES OF THESE DRAWINGS.

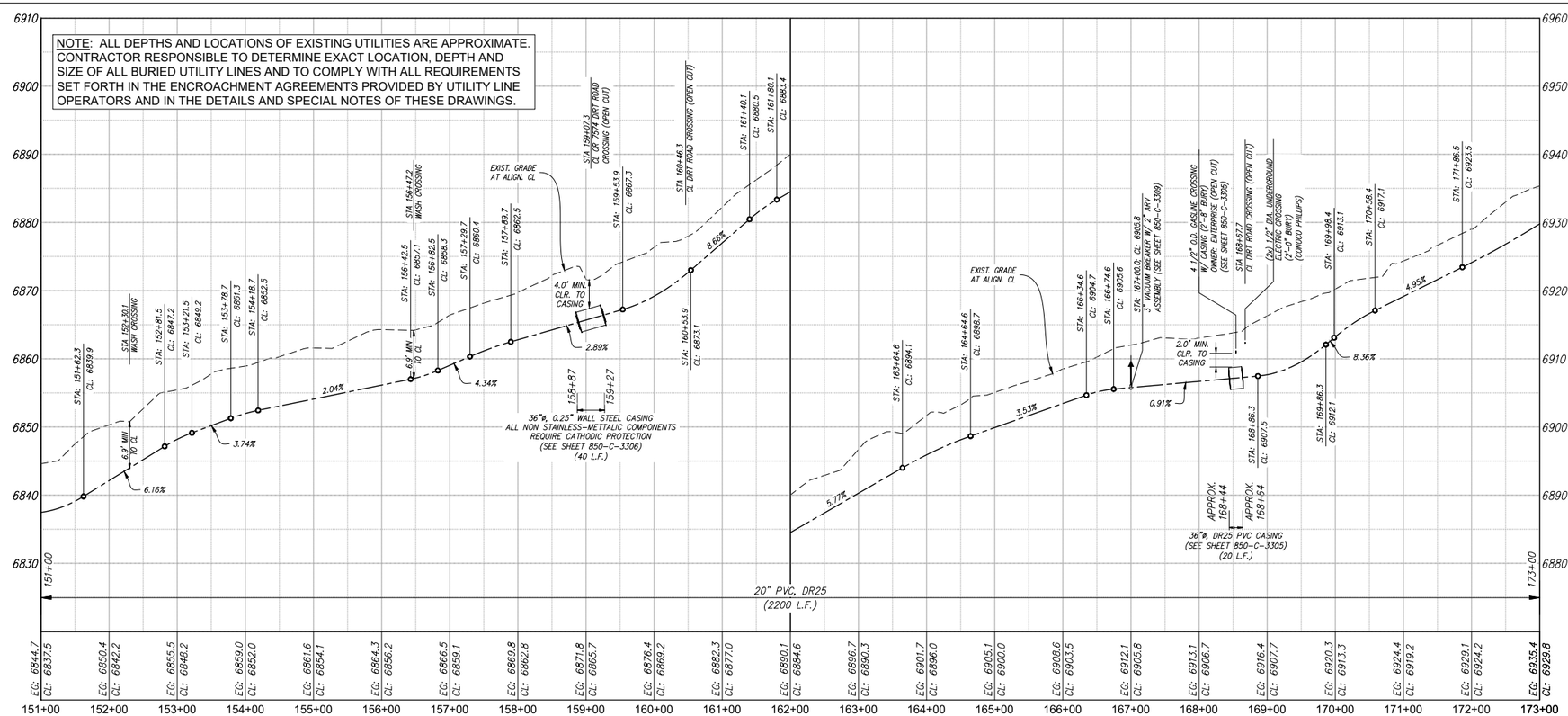

PROFILE VIEW 20" WATERLINE
SCALE: HORIZ. 1" = 200' ; VERT. 1" = 20'

RECLAMATION
Managing Water in the West

SMA
Engineering • Environmental Surveying

ALWAYS THINK SAFETY

U.S. DEPARTMENT OF THE INTERIOR
BUREAU OF RECLAMATION
NAVAJO-GALLUP WATER SUPPLY PROJECT
NEW MEXICO

CUTTER LATERAL - REACH 21

WATER PIPELINE

NO.	DATE	REVISION	BY	APVD
0	12/10/2018	ISSUED FOR CONSTRUCTION	TT	JG

T Tadano
DESIGNED
M Howard / A Vogenthaler
DRAWN
J Garcia
CHECKED
TECH. APPR.
APPROVED
FARMINGTON, NM 2018-11-28

TORY T. TADANO
NEW MEXICO
21073
11/28/18
REGISTERED PROFESSIONAL ENGINEER

REACH 21 PIPELINE

PLAN & PROFILE STA 151+00 To 173+00

850-C-2008

SHEET 365 OF 405

DATE AND TIME PLOTTED 11/28/18
PLOTTED BY aarr

CAD SYSTEM AUTOCAD
CAD FILENAME Reach 21 PnP5.dwg

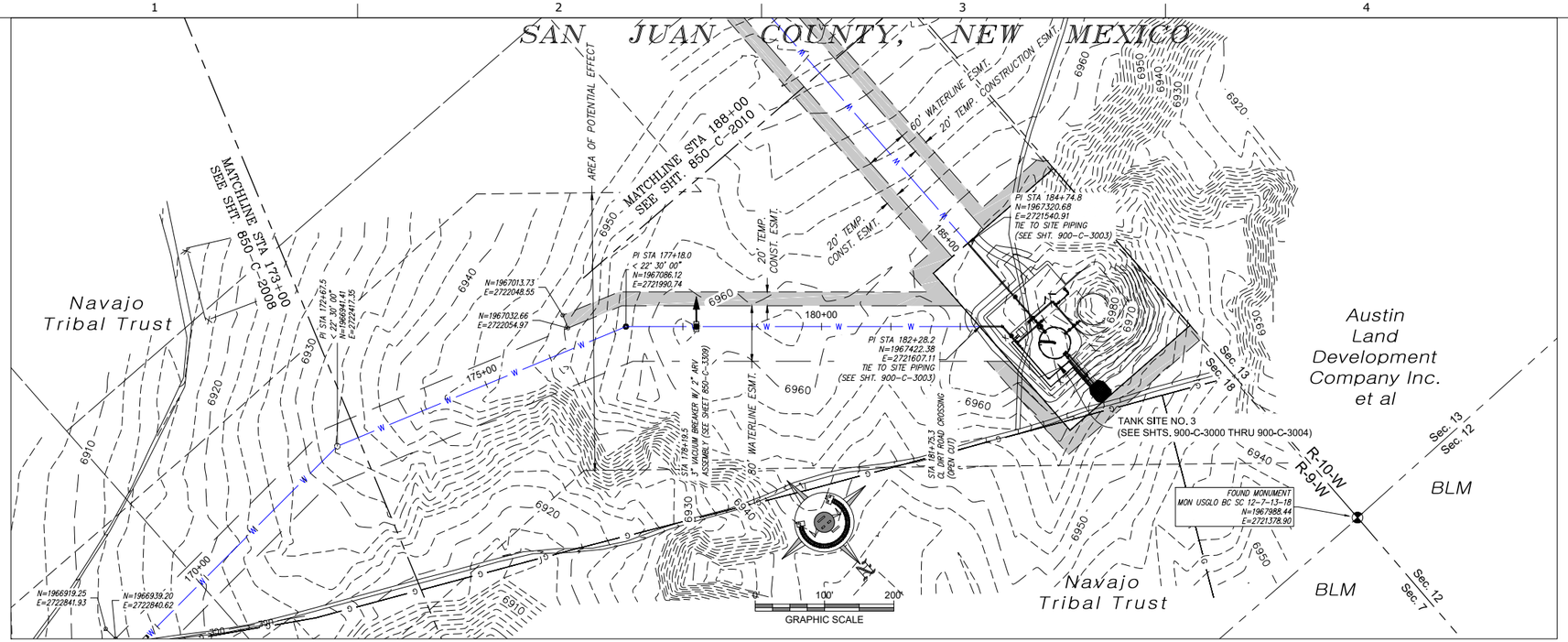

PLAN VIEW
20" WATERLINE

NOTE:
THIS SHEET CONTAINS WORK IN THE VICINITY OF A **"CULTURALLY SENSITIVE AREA"**, SEE TECHNICAL SPECIFICATION PUBLIC WATER TRANSMISSION SYSTEMS 33 11 13. ENGINEER MUST BE NOTIFIED AT LEAST FIVE (5) WORKING DAYS PRIOR TO ANY GROUND DISTURBING ACTIVITIES WITHIN 100 FEET OF SITE.

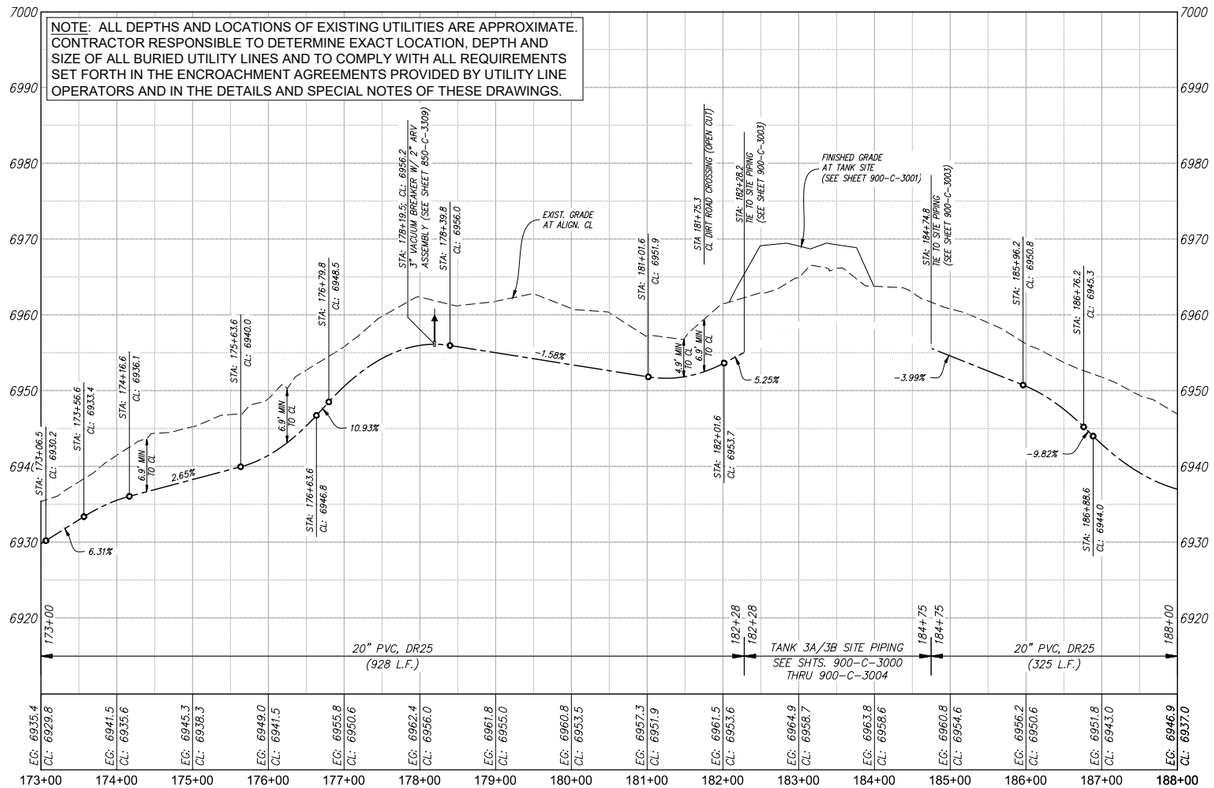

PROFILE VIEW 20" WATERLINE
SCALE: HORIZ. 1" = 200' ; VERT. 1" = 20'

RECLAMATION
Managing Water in the West

SMA
Engineering • Environmental Surveying

ALWAYS THINK SAFETY

U.S. DEPARTMENT OF THE INTERIOR
BUREAU OF RECLAMATION
NAVAJO-GALLUP WATER SUPPLY PROJECT
NEW MEXICO

CUTTER LATERAL - REACH 21

WATER PIPELINE

NO.	DATE	REVISION	BY	APVD
0	12/10/2018	ISSUED FOR CONSTRUCTION	TT	JG

T Tadano
DESIGNED
M Howard / A Vogenthaler
DRAWN
J Garcia
CHECKED
TECH. APPR.
APPROVED
ADMIN APPROVAL TITLE

FARMINGTON, NM 2018-11-28

TORY T. TADANO
NEW MEXICO
21073
LICENSED PROFESSIONAL ENGINEER
11/28/18

REACH 21 PIPELINE

PLAN & PROFILE STA 173+00 To 188+00

850-C-2009

SHEET 366 OF 405

DATE AND TIME PLOTTED 11/28/18
PLOTTED BY wav

CAD SYSTEM AUTOCAD
CAD FILENAME Reach 21 PnPfs.dwg

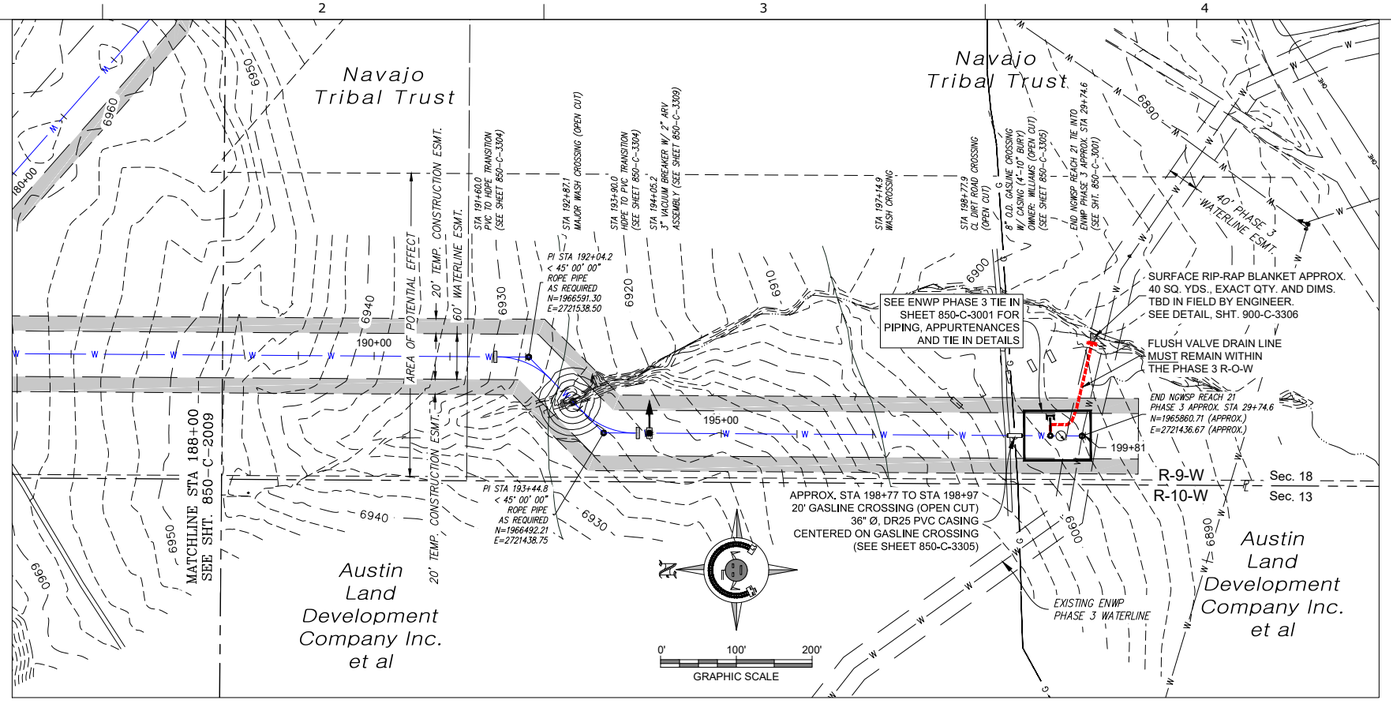

PLAN VIEW
20" WATERLINE

NOTE:
THIS SHEET CONTAINS WORK IN THE VICINITY OF A **"CULTURALLY SENSITIVE AREA"**, SEE TECHNICAL SPECIFICATION PUBLIC WATER TRANSMISSION SYSTEMS 33 11 13. ENGINEER MUST BE NOTIFIED AT LEAST FIVE (5) WORKING DAYS PRIOR TO ANY GROUND DISTURBING ACTIVITIES WITHIN 100 FEET OF SITE.

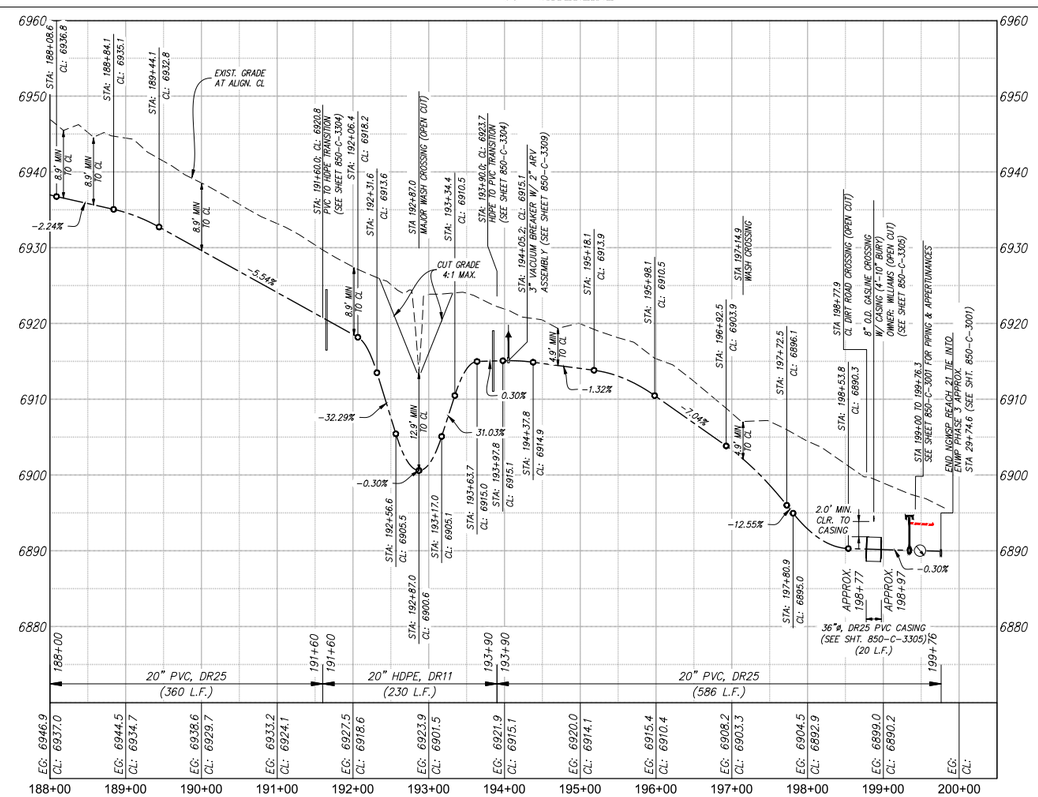

PROFILE VIEW 20" WATERLINE
SCALE: HORIZ. 1" = 200' ; VERT. 1" = 20'

NOTES: 1. LOCATION OF EXISTING ENWP PHASE 3 PIPING IS APPROXIMATE.
2. ALL DEPTHS AND LOCATIONS OF EXISTING UTILITIES ARE APPROXIMATE. CONTRACTOR RESPONSIBLE TO DETERMINE EXACT LOCATION, DEPTH AND SIZE OF ALL BURIED UTILITY LINES AND TO COMPLY WITH ALL REQUIREMENTS SET FORTH IN THE ENCROACHMENT AGREEMENTS PROVIDED BY UTILITY LINE OPERATORS AND IN THE DETAILS AND SPECIAL NOTES OF THESE DRAWINGS.

RECLAMATION
Managing Water in the West

SMA
Engineering • Environmental Surveying

ALWAYS THINK SAFETY

U.S. DEPARTMENT OF THE INTERIOR
BUREAU OF RECLAMATION
NAVAJO-GALLUP WATER SUPPLY PROJECT
NEW MEXICO

CUTTER LATERAL - REACH 21

WATER PIPELINE

NO.	DATE	REVISION	BY	APVD
0	12/10/2018	ISSUED FOR CONSTRUCTION	TT	JG

T Tadano
DESIGNED
M Howard / A Vogenthaler
DRAWN
J Garcia
CHECKED
TECH. APPR.
APPROVED
ADMIN APPROVAL - TITLE
FARMINGTON, NM 2018-11-28

TORY T. TADANO
NEW MEXICO
21073
LICENSED PROFESSIONAL ENGINEER
11/28/18

REACH 21 PIPELINE

PLAN & PROFILE STA 188+00 To 199+76.3

850-C-2010

SHEET 367 OF 405

DATE AND TIME PLOTTED 1/28/18
PLOTTED BY wav
CAD SYSTEM AUTOCAD
CAD FILENAME Reach 21 PnPfs.dwg

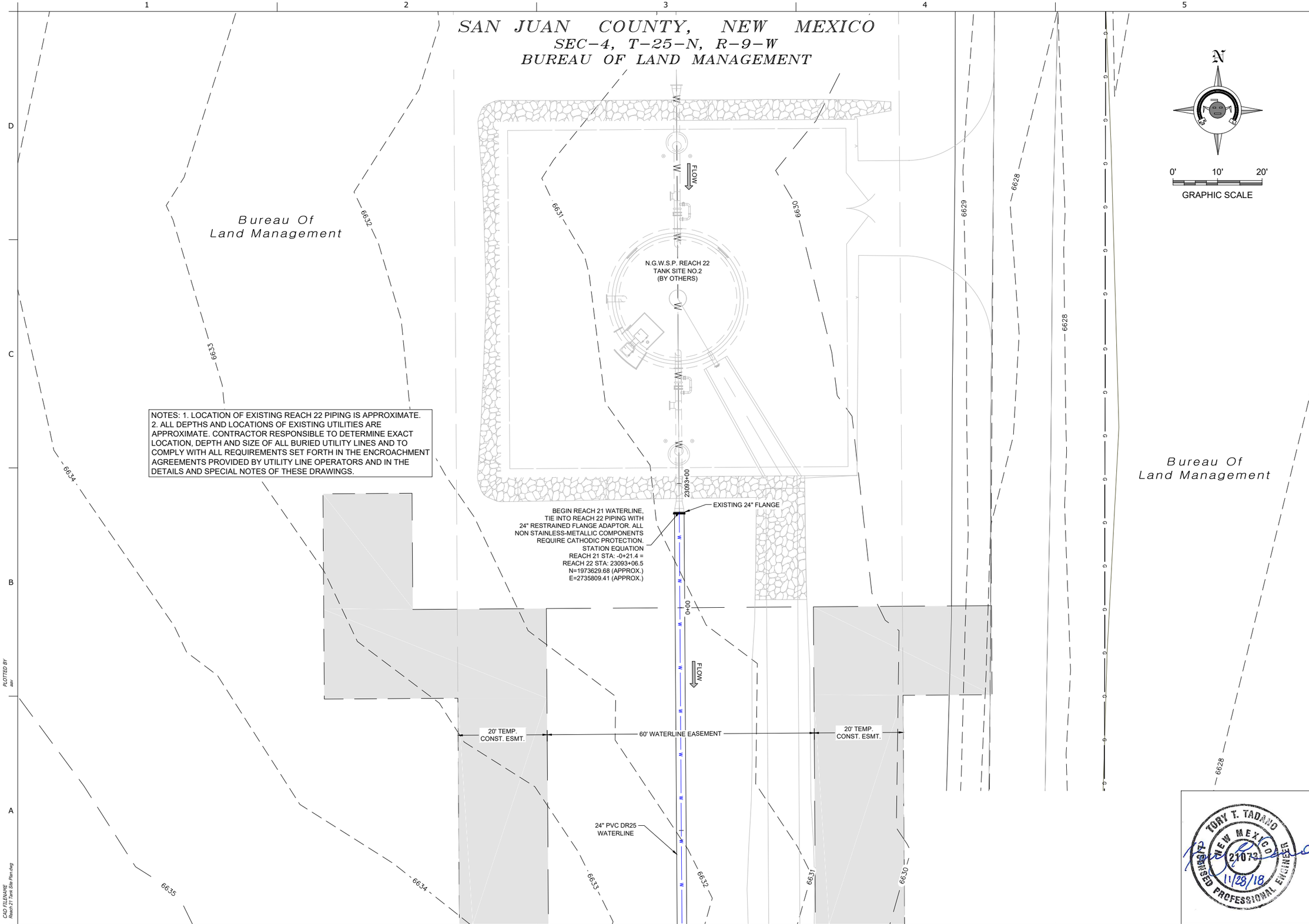

NOTES: 1. LOCATION OF EXISTING REACH 22 PIPING IS APPROXIMATE.
2. ALL DEPTHS AND LOCATIONS OF EXISTING UTILITIES ARE APPROXIMATE. CONTRACTOR RESPONSIBLE TO DETERMINE EXACT LOCATION, DEPTH AND SIZE OF ALL BURIED UTILITY LINES AND TO COMPLY WITH ALL REQUIREMENTS SET FORTH IN THE ENCROACHMENT AGREEMENTS PROVIDED BY UTILITY LINE OPERATORS AND IN THE DETAILS AND SPECIAL NOTES OF THESE DRAWINGS.

RECLAMATION
Managing Water in the West

SMA
Engineering • Environmental Surveying

ALWAYS THINK SAFETY

U.S. DEPARTMENT OF THE INTERIOR
BUREAU OF RECLAMATION
NAVAJO-GALLUP WATER SUPPLY PROJECT
NEW MEXICO

CUTTER LATERAL - REACH 21

WATER PIPELINE

NO.	DATE	REVISION	BY	APV'D
0	12/10/2018	ISSUED FOR CONSTRUCTION	TT	JG

T Tadano
DESIGNED
M Howard / A Vogenthaler
DRAWN
J Garcia
CHECKED
TECH. APPR.
APPROVED
SUPERVISORY - TITLE

FARMINGTON, NM 2018-11-28

REACH 21 PIPELINE

REACH 22 TANK SITE NO. 2 TIE IN

850-C-3000

SHEET 368 OF 405

TORY T. TADANO
NEW MEXICO
21073
LICENSED PROFESSIONAL ENGINEER
11/28/18

DATE AND TIME PLOTTED 11/28/18
PLOTTED BY aav

CAD SYSTEM AUTOCAD
CAD FILENAME Reach 21 Tank Site Plan.dwg

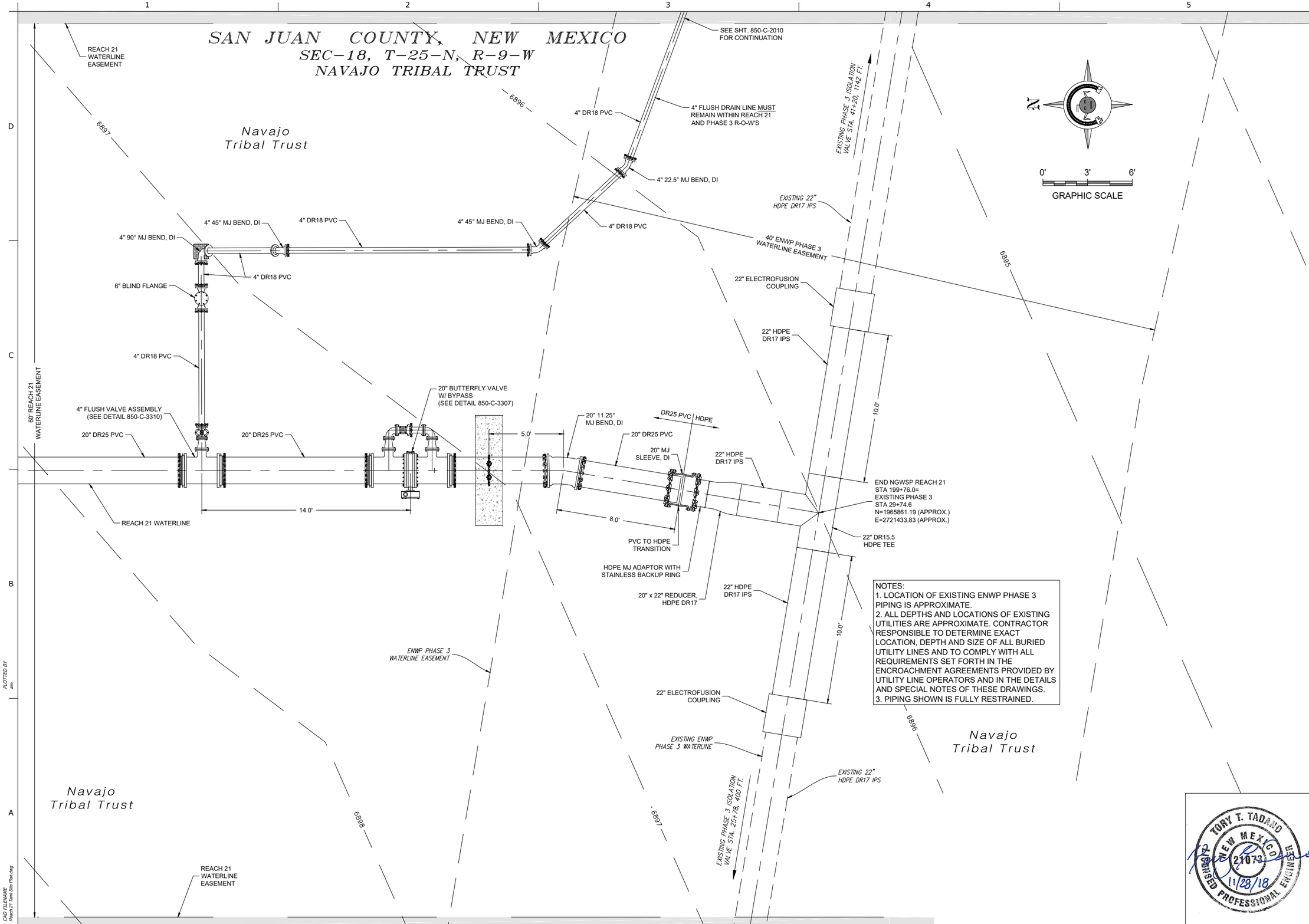

NOTES:
1. LOCATION OF EXISTING ENWP PHASE 3 PIPING IS APPROXIMATE.
2. ALL DEPTHS AND LOCATIONS OF EXISTING UTILITIES ARE APPROXIMATE. CONTRACTOR RESPONSIBLE TO DETERMINE EXACT LOCATION, DEPTH AND SIZE OF ALL BURIED UTILITY LINES AND TO COMPLY WITH ALL REQUIREMENTS SET FORTH IN THE ENCROACHMENT AGREEMENTS PROVIDED BY UTILITY LINE OPERATORS AND IN THE DETAILS AND SPECIAL NOTES OF THESE DRAWINGS.
3. PIPING SHOWN IS FULLY RESTRAINED.

RECLAMATION
Managing Water in the West

SMA
Engineering • Environmental Surveying

ALWAYS THINK SAFETY

U.S. DEPARTMENT OF THE INTERIOR
BUREAU OF RECLAMATION
NAVAJO-GALLUP WATER SUPPLY PROJECT
NEW MEXICO

CUTTER LATERAL - REACH 21

WATER PIPELINE

NO.	DATE	REVISION	BY	APV'D
0	12/10/2018	ISSUED FOR CONSTRUCTION	TT	JG

T Tadano
DESIGNED
M Howard / A Vogenthaler
DRAWN
J Garcia
CHECKED
TECH. APPR.
APPROVED
ADMIN APPROVAL - TITLE

FARMINGTON, NM 2018-11-28

REACH 21 PIPELINE

ENWP PHASE 3 TIE IN

850-C-3001

SHEET 369 OF 405

TORY T. TADANO
NEW MEXICO
21073
11/28/18
LICENSED PROFESSIONAL ENGINEER

DATE AND TIME PLOTTED 11/28/18
PLOTTED BY aav

CAD SYSTEM AUTOCAD
CAD FILENAME Reach 21 Tank Site Plan.dwg

KEYED NOTES - DZ TANK SITE	
Item No.	Description
1	8" MJ D.I. END CAP
2	THRUST BLOCK (2.5' x 2.5' x 2.0') SEE SHEET 850-C-3303)

NOTES:

1. ALL BURIED METALLIC COMPONENTS, INCLUDING PIPES, FITTINGS, VALVES, COUPLINGS, ETC. SHALL BE CATHODICALLY PROTECTED. ELECTRICALLY ISOLATE ALL TANK AND BUILDING CONNECTIONS IN ACCORDANCE WITH CATHODIC PROTECTION SYSTEM DESIGN. CP SYSTEM DESIGN TO BE PROVIDED BY CONTRACTOR, PER SPECIFICATIONS. .
2. ALL STEEL PIPE AND FITTINGS SHALL BE STANDARD WALL THICKNESS UNLESS OTHERWISE NOTED.
3. ALL BURIED STEEL PIPE SHALL BE COLD-APPLIED TAPE COATED AND FUSION-BONDED EPOXY COATED, PER SPECIFICATIONS.
4. ALL STEEL PIPE AND FITTINGS BEYOND TANK AND BUILDING FOUNDATIONS SHALL BE SHOP- OR FIELD-WELDED UNLESS OTHERWISE NOTED. ALL FIELD-WELDED PIPES AND FITTINGS SHALL BE RE-COATED PER SPECIFICATIONS AFTER WELDING.

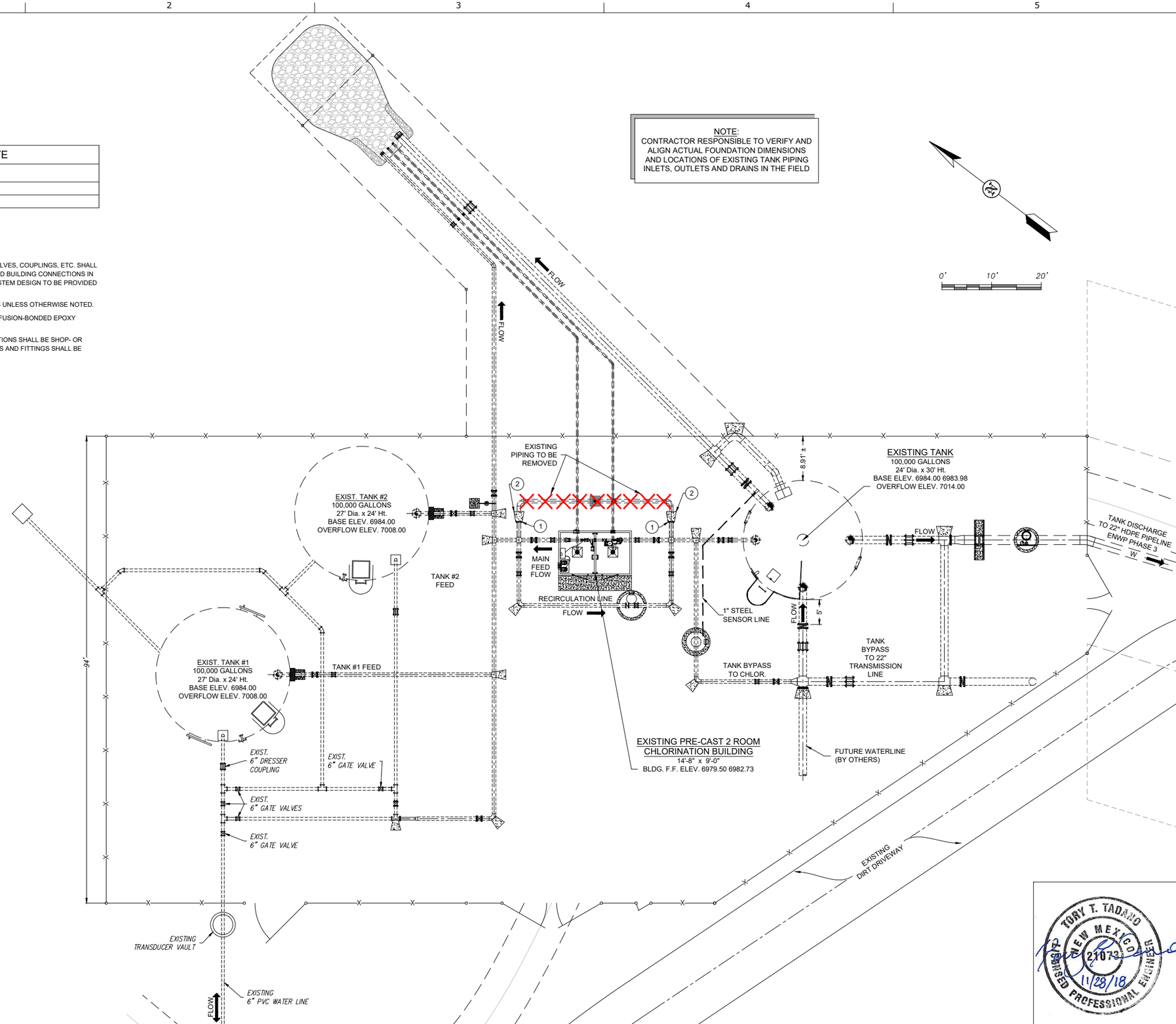

RECLAMATION
Managing Water in the West

SMA
Engineering • Environmental Surveying

ALWAYS THINK SAFETY

U.S. DEPARTMENT OF THE INTERIOR
BUREAU OF RECLAMATION
NAVAJO-GALLUP WATER SUPPLY PROJECT
NEW MEXICO

CUTTER LATERAL - REACH 21

WATER PIPELINE

NO.	DATE	REVISION	BY	APV'D
0	12/10/2018	ISSUED FOR CONSTRUCTION	TT	JG

T Tadano
DESIGNED
M Howard / A Vogenthaler
DRAWN
J Garcia
CHECKED
TECH. APPR.
APPROVED
ADMIN APPROVAL TITLE

FARMINGTON, NM 2018-11-28

TORY T. TADANO
NEW MEXICO
21073
11/28/18
LICENSED PROFESSIONAL ENGINEER

REACH 21 PIPELINE

DZ TANK SITE PIPING PLAN UPDATES

850-C-3002

SHEET 370 OF 405

DATE AND TIME PLOTTED Not Plotted
PLOTTED BY Not Plotted
CAD SYSTEM AUTOCAD
CAD FILENAME UNKNOWN

NOTES:

1. CLSM MAY BE USED IN LIEU OF COMPACTED SELECT MATERIAL AT CONTRACTOR'S OPTION AND EXPENSE.
2. ANY SECTION OF PIPE EMBEDDED IN COMPACTED SELECT MATERIAL THAT FAILS TO MEET SOIL CLASSIFICATION AND/OR COMPACTION REQUIREMENTS SHALL BE DUG UP, RE-BURIED, RE-COMPACTED AND RE-TESTED AT CONTRACTOR'S SOLE EXPENSE.
3. MINIMUM CLEARANCES BETWEEN PIPE AND TRENCH WALL MUST BE MET PRIOR TO PLACING EMBEDMENT (WHETHER COMPACTED SELECT MATERIAL OR CLSM). INCREASE CLEARANCES AND/OR TRENCH WIDTH AS NEEDED TO ALLOW FOR COMPACTION AND/OR TO ENSURE ADEQUATE CLSM LAYER THICKNESS IN HAUNCH AREAS AND PIPE SPRING LINE. DO NOT ALLOW PIPE TO REST AGAINST TRENCH WALL.
4. ROUNDED TRENCH BOTTOMS MAY BE USED IN CONJUNCTION WITH CLSM, PROVIDED THE THICKNESS OF SOIL CEMENT AROUND THE PIPE IS AT NO POINT LESS THAN 3".

SIDE CLEARANCE TABLE FOR SOIL TRENCH AND SELECT MATERIAL OR CLSM EMBEDMENT

		DUCTILE IRON		PVC		HDPE	
HEIGHT OF COVER	CMP	MATERIAL TYPE 2*	MATERIAL TYPE 3*	MATERIAL TYPE 2	MATERIAL TYPE 3	MATERIAL TYPE 2	MATERIAL TYPE 3
<= 10'	12"	12"	12"	12"	12"	24"	24"
<= 15'	NA	12"	12"	12"	12"	24"	24"
<= 20'	NA	NA	NA	12"	12"	24"	24"

NA - NOT APPLICABLE
* WHEN BACKFILL IS COMPACTED, PROVIDE AN ADDITIONAL 6" OF SIDE CLEARANCE.
1. BACKFILL CANNOT EXCEED 5' UNTIL EMBEDMENT OBTAINS AN UNCONFINED COMPRESSIVE STRENGTH OF 30 PSI.
2. DUCTILE IRON PIPE INCLUDES STANDARD WATER PRESSURES OF 250 AND 300 PSI.
3. PVC PIPE INCLUDES DR RATIOS OF 18, 21, AND 25.
4. HDPE PIPE IS FOR DR11 ONLY.

TRENCH SELECTION MAXIMUM DEPTH OF BORE USING CLSM EMBEDMENT

		MAXIMUM COVER DEPTH* (FEET)	
PIPE MATERIAL	PIPE SIZE/ CLASS	MATERIAL TYPE 2	MATERIAL TYPE 3
PVC	24" DR25	16	12
PVC	24" DR21	20	15
PVC	20" DR25	17	13
PVC	20" DR21	20	16
PVC	20" DR18	20	20
HDPE	20" DR11	20	20
STEEL	ALL DIAMETERS	NA	NA
DUCTILE IRON	ALL DIAMETERS	NA	NA

NA - NOT ALLOWED - NATIVE MATERIAL EMBEDMENT NOT ALLOWED.
* THE MAXIMUM COVER ALLOWED MAY BE INCREASED BASED ON THE TRENCH SIDE WALL STRENGTH AS APPROVED BY THE COR AND BASED ON INPUT FROM THE DESIGN ENGINEER.

MINIMUM PERCENT COMPACTION FOR EMBEDMENT IN NON-TRAFFICKED AREAS

CLEAN COARSE-GRAINED SOILS	
Cover Depth	Minimum Compaction
4' to 15'	85%
15' to 20'	95%
Coarse-grained soils (sand or gravel), GW, GP, SW, SP, with less than 12% fines	
SANDY OR GRAVELLY FINE-GRAINED SOILS & COARSE-GRAINED SOILS WITH FINES	
Cover Depth	Minimum Compaction
4' to 10'	85%
10' to 12'	95%
Fine-grained soils (LL<50) Soils with medium to no plasticity, CL, ML, ML-CL, with more than 30% coarse-grained particles, or Coarse-grained soils (sand or gravel), GM, GC, SM, SC, with more than 12% fines	

NOTES ON COMPACTION:
1. ALL COMPACTION VALUES BASED ON STD. PROCTOR, ASTM D698. SOIL CLASSIFICATIONS BASED ON ASTM C117, C136.
2. EMBEDMENT WITHIN DRIVING SURFACES OF ALL ROADS, DRIVEWAYS AND PARKING AREAS SHALL BE COMPACTED TO AT LEAST 95% STD. PROCTOR, REGARDLESS OF SOIL TYPE. SOIL CEMENT MAY BE USED IN LIEU OF COMPACTED SELECT MATERIAL.

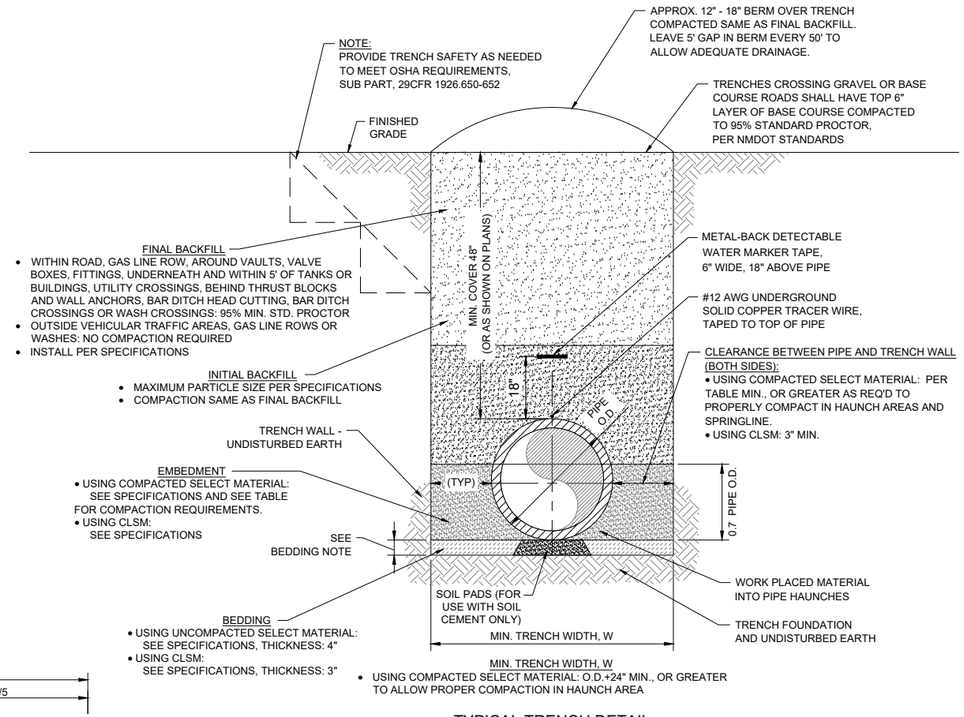

TYPICAL TRENCH DETAIL

NOT TO SCALE

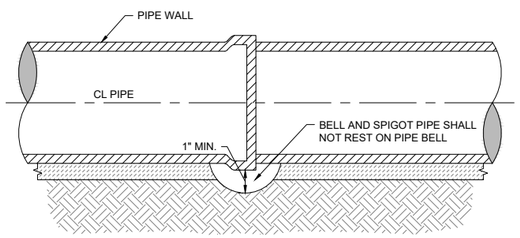

TYPICAL BELL HOLE DETAIL

NOT TO SCALE

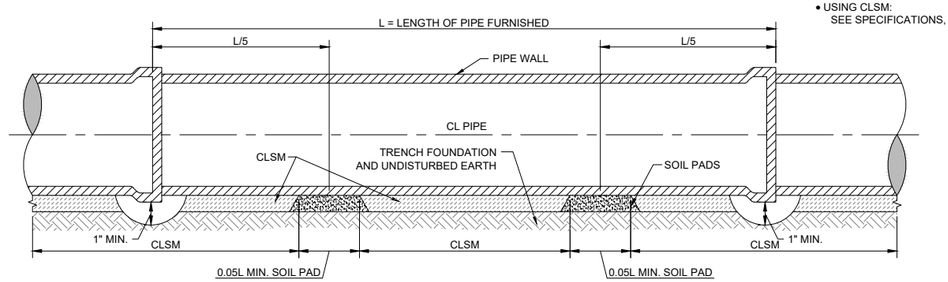

SOIL CEMENT INSTALLATION WITH SOIL PADS

NOT TO SCALE

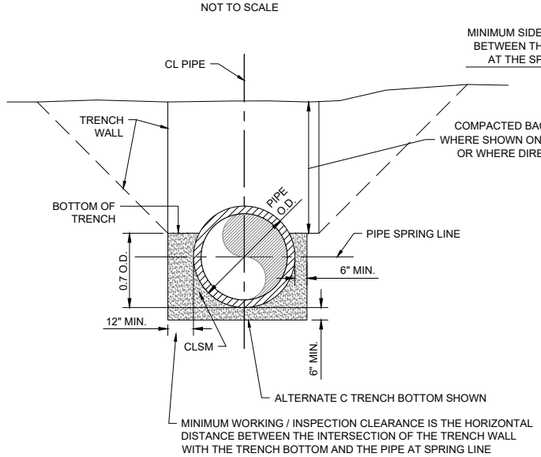

ROCK TRENCH - MATERIAL TYPE 1

NOT TO SCALE

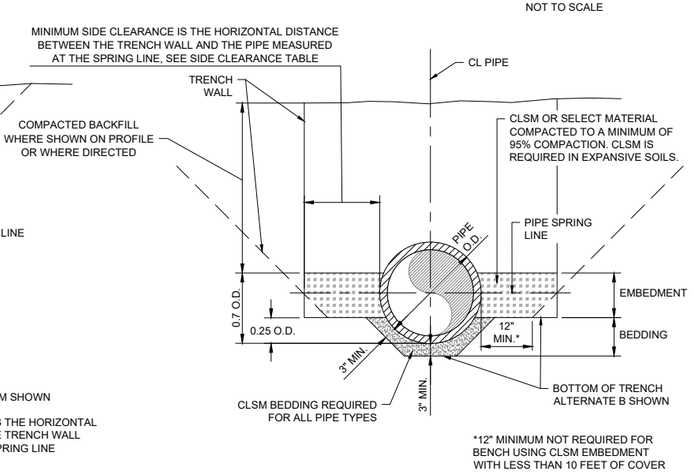

SOIL TRENCH - MATERIAL TYPE 2 & 3

NOT TO SCALE

NATIVE MATERIAL PROPERTIES

MATERIAL TYPE 1 - TYPICAL TRENCH WALL MATERIALS WOULD BE ROCK MATERIALS CLASSIFIED AS SANDSTONE, CLAYSTONE, MUDSTONE, OR SILTSTONE; CEMENTED SOILS; AND CLAYEY MATERIAL WITH IN-PLACE DENSITIES OF 95% STANDARD PROCTOR OR HIGHER.

MATERIAL TYPE 2 - TYPICAL TRENCH WALL MATERIALS WOULD INCLUDE SILTY OR CLAYEY MATERIAL WITH IN-PLACE DENSITIES BETWEEN 85% AND 95% STANDARD PROCTOR; OR COHESIVE SOILS WITH IN-PLACE RELATIVE DENSITIES 40% OR GREATER.

MATERIAL TYPE 3 - TYPICAL TRENCH WALL MATERIALS WOULD INCLUDE LOW-DENSITY COHESIONLESS SOILS (CLEAN SANDS AND / OR LOOSE CLEAN GRAVELS) WITH AN IN-PLACE RELATIVE DENSITY BELOW 40%; ELASTIC SILT; LOW DENSITY SILTY OR CLAYEY SOILS WITH A DENSITY BELOW 85% STANDARD PROCTOR.

TYPICAL TRENCH DETAIL

NOT TO SCALE

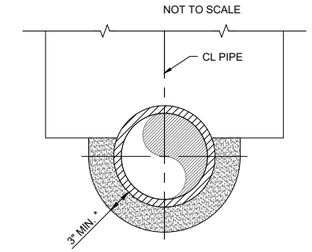

ALTERNATE A

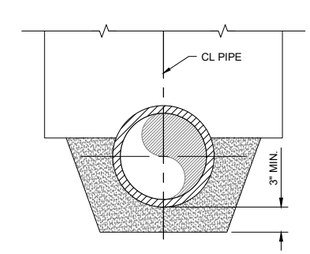

ALTERNATE B

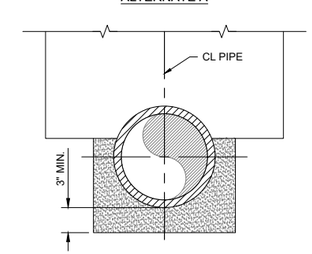

ALTERNATE C

*6" MINIMUM REQUIRED BETWEEN BOTTOM OF PIPE AND ROCK SURFACES

ACCEPTABLE TRENCH BOTTOMS FOR CLSM

NOT TO SCALE

TORY T. TADANO NEW MEXICO 21073 LICENSED PROFESSIONAL ENGINEER 11/28/18

RECLAMATION Managing Water in the West

SMA Engineering • Environmental Surveying

ALWAYS THINK SAFETY

U.S. DEPARTMENT OF THE INTERIOR
BUREAU OF RECLAMATION
NAVAJO-GALLUP WATER SUPPLY PROJECT
NEW MEXICO

CUTTER LATERAL - REACH 21

WATER PIPELINE

NO.	DATE	REVISION	BY	AP'VD
0	12/10/2018	ISSUED FOR CONSTRUCTION	TT	JG

T Tadano
DESIGNED
M Howard / A Vogenthaler
DRAWN
J Garcia
CHECKED
TECH. APPR.
APPROVED
ADMIN APPROVAL TITLE
FARMINGTON, NM 2018-11-28

REACH 21 PIPELINE

PIPELINE TRENCH DETAILS

850-C-3301

SHEET 371 OF 405

DATE AND TIME PLOTTED 11/28/18
PLOTTED BY aav

CAD SYSTEM AUTOCAD
CAD FILENAME Reach 21 Trench Details.dwg

NOTES:
1. EXISTING FENCE SHALL NOT BE CUT UNTIL SECURED TO H-BRACE ASSEMBLY.
2. INSTALL RANCHER STYLE GATE AT ALL FENCE CROSSINGS UNLESS SPECIFICALLY NOTED OTHERWISE ON PLANS.

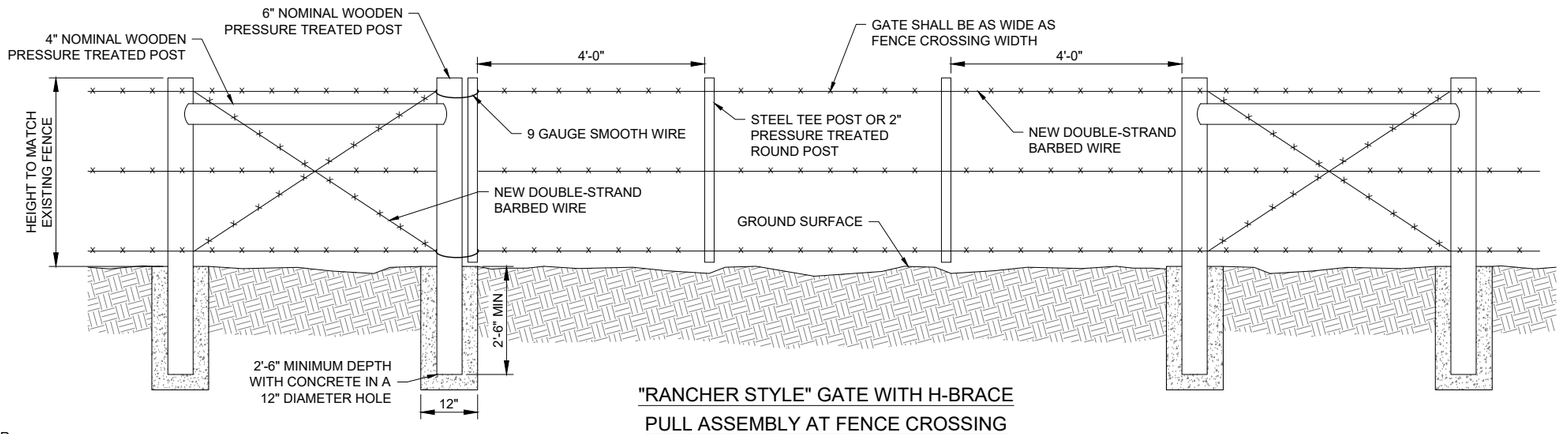

"RANCHER STYLE" GATE WITH H-BRACE PULL ASSEMBLY AT FENCE CROSSING

NOT TO SCALE

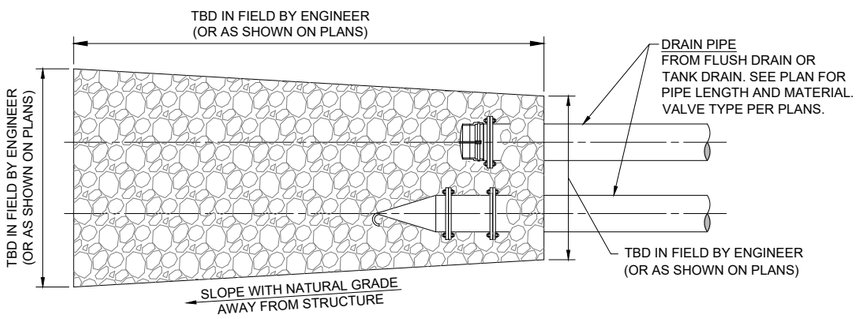

PLAN VIEW

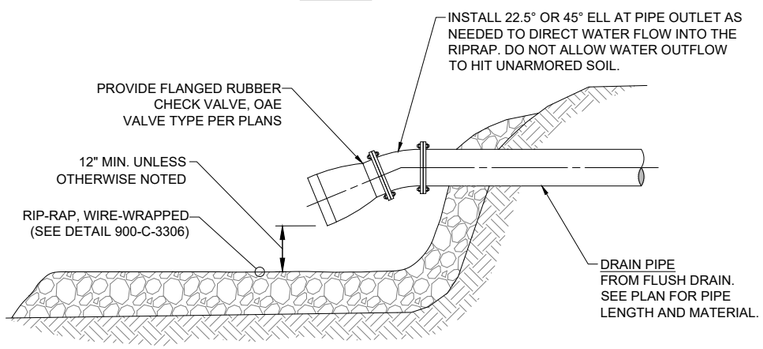

ELEVATION VIEW

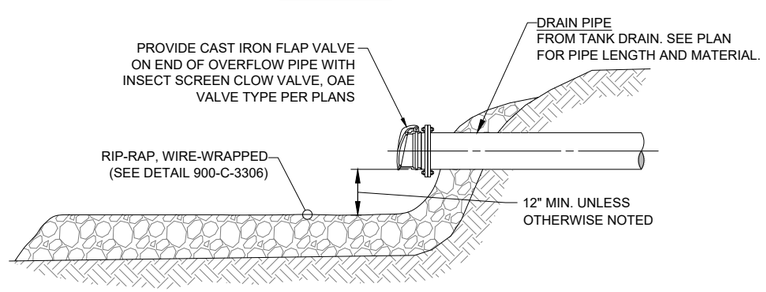

ELEVATION VIEW

TYPICAL SPLASH PAD DETAIL

NOT TO SCALE

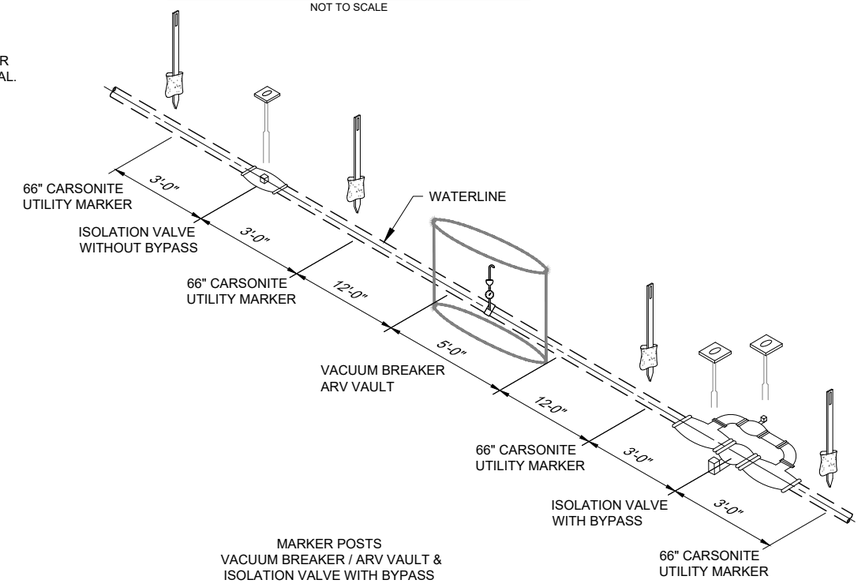

MARKER POSTS VACUUM BREAKER / ARV VAULT & ISOLATION VALVE WITH BYPASS

NOTE:
1. CARSONITE UTILITY MARKER ON ALL P.I.'S AND GRADE CHANGES.
2. MAXIMUM DISTANCE BETWEEN CARSONITE UTILITY MARKERS SHALL BE 1500 LF.

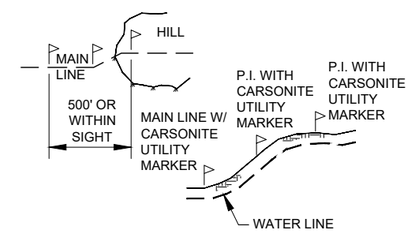

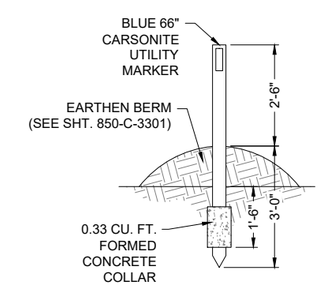

INDIVIDUAL MARKER POST

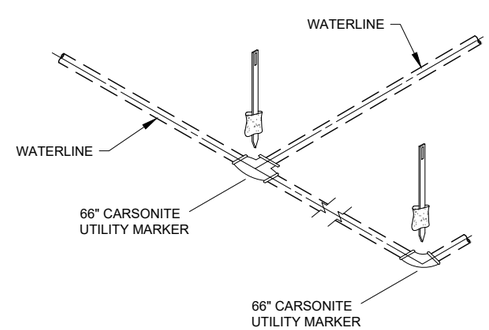

MARKER POSTS TEE & ELL

TYPICAL MARKER POSTS

NOT TO SCALE

RECLAMATION Managing Water in the West

SMA Engineering • Environmental Surveying

ALWAYS THINK SAFETY

U.S. DEPARTMENT OF THE INTERIOR
BUREAU OF RECLAMATION
NAVAJO-GALLUP WATER SUPPLY PROJECT
NEW MEXICO

CUTTER LATERAL - REACH 21

WATER PIPELINE

NO.	DATE	REVISION	BY	APV'D
0	12/10/2018	ISSUED FOR CONSTRUCTION	TT	JG

T Tadano
DESIGNED
M Howard / A Vogenthaler
DRAWN
J Garcia
CHECKED
TECH. APPR.
APPROVED
ADMIN APPROVAL - TITLE

FARMINGTON, NM 2018-11-28

TONY T. TADANO NEW MEXICO 21073 LICENSED PROFESSIONAL ENGINEER 11/28/18

REACH 21 PIPELINE

MISCELLANEOUS CONSTRUCTION DETAILS

850-C-3302

SHEET 372 OF 405

DATE AND TIME PLOTTED 11/28/18
PLOTTED BY alov

CAD SYSTEM AUTOCAD
CAD FILENAME Reach 21 Splash Pad Details.dwg

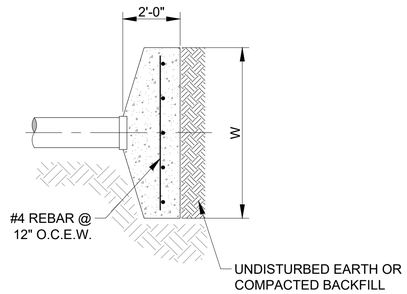

PLAN VIEW
CONCRETE BLOCKING
FOR PLUG OR CAP

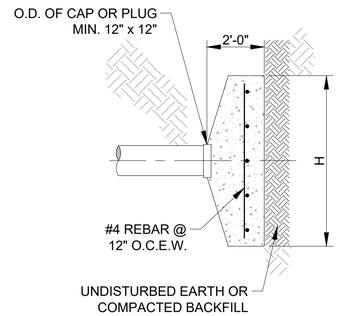

ELEVATION VIEW
CONCRETE BLOCKING
FOR PLUG OR CAP

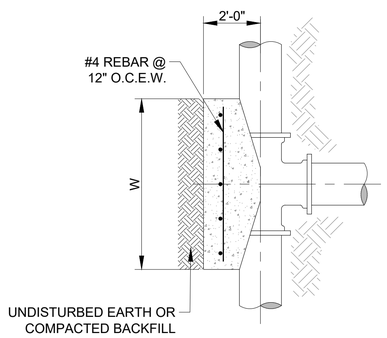

PLAN VIEW
CONCRETE BLOCKING
FOR TEE

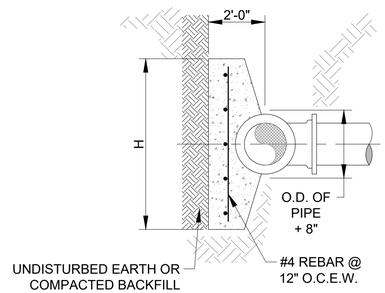

ELEVATION VIEW
CONCRETE BLOCKING
FOR TEE

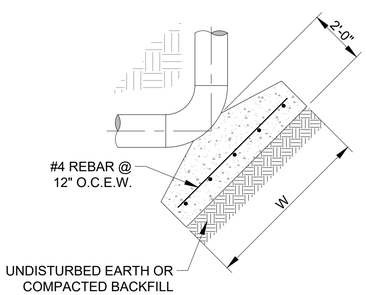

PLAN VIEW
CONCRETE BLOCKING
FOR ELBOW

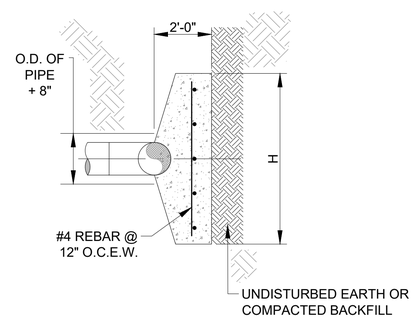

ELEVATION VIEW
CONCRETE BLOCKING
FOR ELBOW

THRUST BLOCK DETAIL
NOT TO SCALE

Station	Fitting	Type	Pipe Size (in)	DR Rating DR	Required Height/Width (ft)
25+25	BFV	Wall Anchor	24	25	**8.0**
38+49	PVC TO HDPE	Wall Anchor	24	11	**7.5**
46+15	HDPE TO PVC	Wall Anchor	24	11	**7.5**
46+30	4" Flush Valve	Thrust Block	24	25	**2.0**
47+45	45 BEND (33.75 ACTUAL)	Thrust Block	24	25	**7.0**
51+90	45 BEND	Thrust Block	24	25	**7.0**
71+79	BFV (pipe DR transition)	Wall Anchor	20	18	**8.0**
92+94	PVC TO HDPE	Wall Anchor	20	9	**6.5**
99+01	HDPE TO PVC	Wall Anchor	20	9	**6.5**
99+31	BFV	Wall Anchor	20	25	**6.5**
121+55	22.5 BEND	Thrust Block	20	25	**4.0**
127+44	PVC TO HDPE	Wall Anchor	20	11	**6.5**
133+06	HDPE TO PVC	Wall Anchor	20	11	**6.5**
149+58	BFV	Wall Anchor	20	25	**6.5**
153+31	45 BEND (33.75 ACTUAL)	Thrust Block	20	25	**6.0**
156+76	45 BEND (33.75 ACTUAL)	Thrust Block	20	25	**6.0**
172+68	22.5 BEND	Thrust Block	20	25	**4.0**
177+18	22.5 BEND	Thrust Block	20	25	**4.0**
182+61	45 BEND (SITE)	Thrust Block	20	25	**6.0**
191+60	PVC TO HDPE	Wall Anchor	20	11	**6.5**
193+90	HDPE TO PVC	Wall Anchor	20	11	**6.5**
199+00	4" Flush Valve	Thrust Block	20	25	**2.0**
199+35	BFV	Wall Anchor	20	25	**6.5**
DZ Tank	Cap at Chlorinator Bypass	Thrust Block	8	STD Wall	**2.5**
DZ Tank	Cap at Chlorinator Bypass	Thrust Block	8	STD Wall	**2.5**

GENERAL NOTES:

1. CONCRETE SHALL HAVE A MINIMUM COMPRESSIVE STRENGTH OF 3000 psi, MINIMUM COMPRESSIVE STRENGTH IN 28 DAYS. REBAR SHALL BE 60 psi.
2. CONCRETE WALL ANCHOR SHALL BEAR ON UNDISTURBED OR COMPACTED SOIL ON HDPE SIDE.
3. MINIMUM 1.5' COVER OVER TOP OF THRUST BLOCK.
4. IF CONTRACTOR CHOOSES TO INSTALL DUCTILE IRON ELL AT LOCATION NOT INCLUDED IN SUMMARY, CONTRACTOR TO NOTIFY ENGINEER FOR REQUIRED THRUST BLOCK DIMENSIONS.
5. VERTICAL DUCTILE IRON ELLS SHALL NOT BE ALLOWED.
6. SLOPE OR BENCH TRENCHES TO COMPLY WITH OSHA STANDARDS.

RECLAMATION
Managing Water in the West

SMA
Engineering • Environmental Surveying

ALWAYS THINK SAFETY

U.S. DEPARTMENT OF THE INTERIOR
BUREAU OF RECLAMATION
NAVAJO-GALLUP WATER SUPPLY PROJECT
NEW MEXICO

CUTTER LATERAL - REACH 21

WATER PIPELINE

NO.	DATE	REVISION	BY	APV'D
0	12/10/2018	ISSUED FOR CONSTRUCTION	TT	JG

T Tadano
DESIGNED
M Howard / A Vogenthaler
DRAWN
J Garcia
CHECKED
TECH. APPR.
APPROVED
ADMIN APPROVAL - TITLE

FARMINGTON, NM 2019-02-08

TORY T. TADANO
NEW MEXICO
21878
LICENSED PROFESSIONAL ENGINEER
2/13/19

REACH 21 PIPELINE

THRUST BLOCK DETAILS

850-C-3303

SHEET 373 OF 405

DATE AND TIME PLOTTED
2/8/19
PLOTTED BY
atav

CAD SYSTEM
AUTOCAD
CAD FILENAME
Reach 21 Block and Anchor Details.dwg

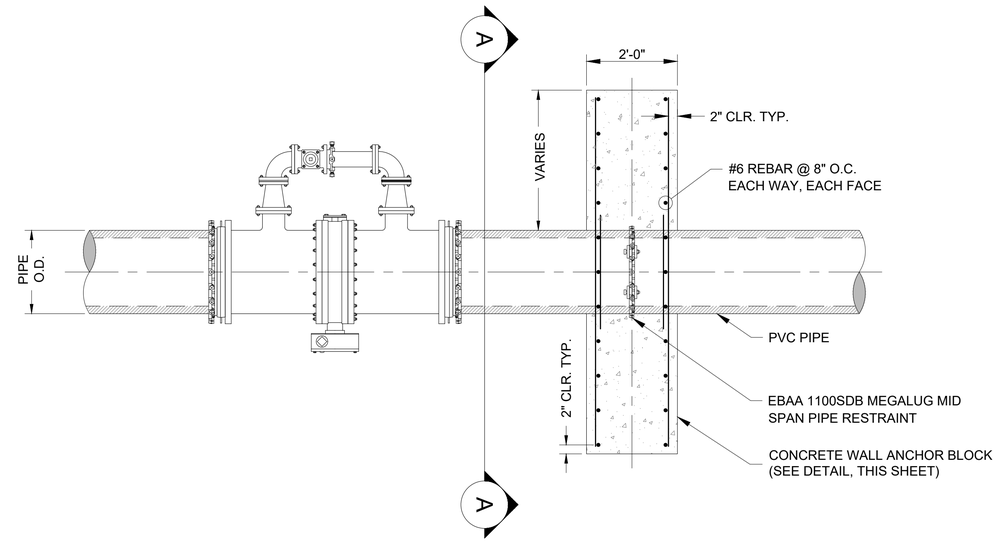

PLAN VIEW FOR PVC

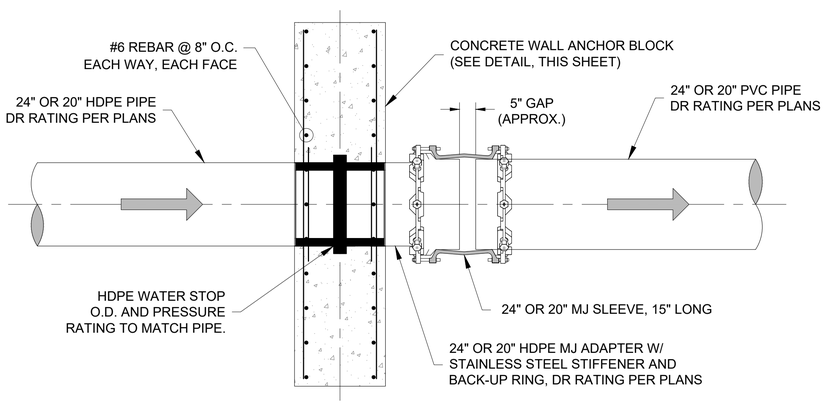

PLAN VIEW

HDPE TO PVC PIPE TRANSITION W/ ANCHOR BLOCK & ANCHOR RING

NOT TO SCALE

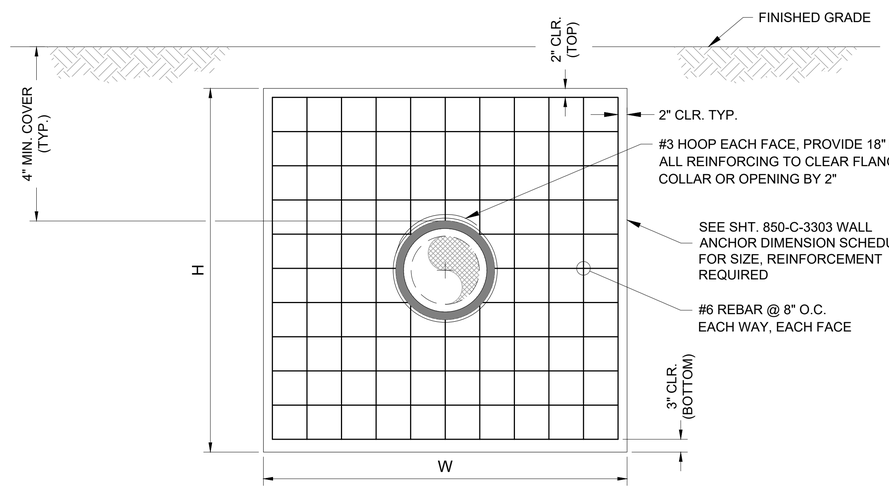

SECTION "A-A"

CONCRETE WALL ANCHOR BLOCK FOR USE W/ BUTTERFLY VALVE AND HDPE TRANSITION RESTRAINT

NOT TO SCALE

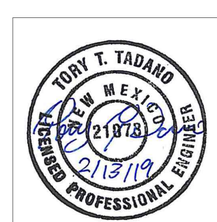

RECLAMATION
Managing Water in the West

SMA
Engineering • Environmental
Surveying

ALWAYS THINK SAFETY

U.S. DEPARTMENT OF THE INTERIOR
BUREAU OF RECLAMATION
NAVAJO-GALLUP WATER SUPPLY PROJECT
NEW MEXICO

CUTTER LATERAL - REACH 21

WATER PIPELINE

NO.	DATE	REVISION	BY	APVD
0	12/10/2018	ISSUED FOR CONSTRUCTION	TT	JG

T Tadano
DESIGNED
M Howard / A Vogenthaler
DRAWN
J Garcia
CHECKED
TECH. APPR.
APPROVED
ADMIN APPROVAL - TITLE

FARMINGTON, NM 2019-02-08

REACH 21 PIPELINE

WALL ANCHOR
BLOCK & PIPE
TRANSITION DETAILS

850-C-3304

SHEET 374 OF 405

DATE AND TIME PLOTTED
2/8/19 8:00
PLOTTED BY
atav

CAD SYSTEM
AUTOCAD
CAD FILENAME
Reach 21 Block and Anchor Details.dwg

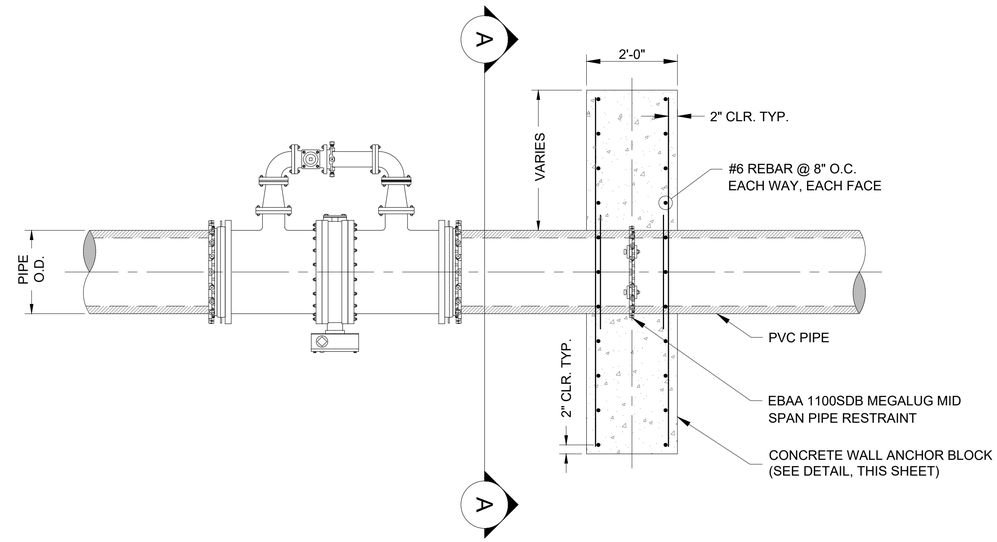

PLAN VIEW FOR PVC

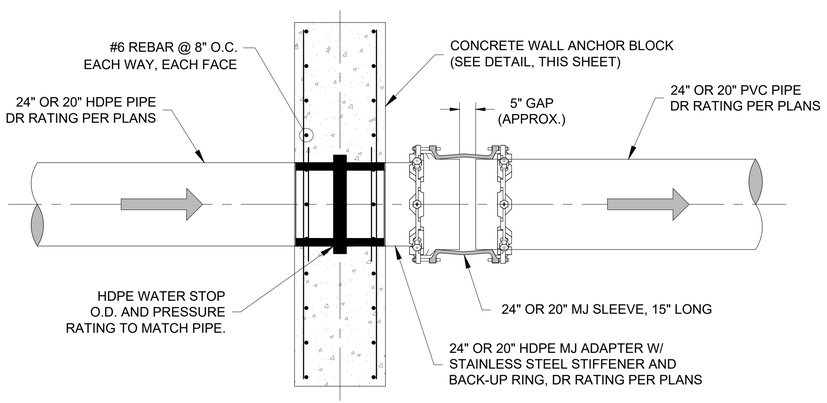

PLAN VIEW

HDPE TO PVC PIPE TRANSITION W/ ANCHOR BLOCK & ANCHOR RING

NOT TO SCALE

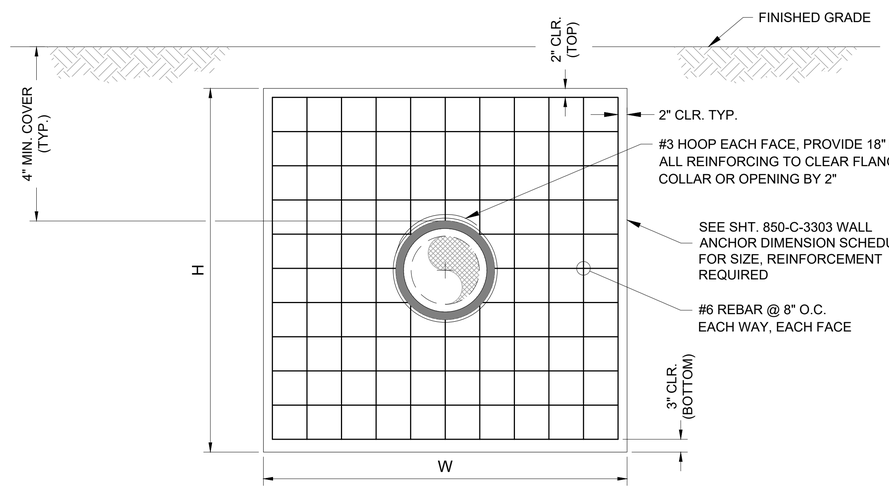

SECTION "A-A"

CONCRETE WALL ANCHOR BLOCK FOR USE W/ BUTTERFLY VALVE AND HDPE TRANSITION RESTRAINT

NOT TO SCALE

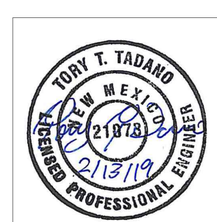

RECLAMATION
Managing Water in the West

SMA
Engineering • Environmental
Surveying

ALWAYS THINK SAFETY

U.S. DEPARTMENT OF THE INTERIOR
BUREAU OF RECLAMATION
NAVAJO-GALLUP WATER SUPPLY PROJECT
NEW MEXICO

CUTTER LATERAL - REACH 21

WATER PIPELINE

NO.	DATE	REVISION	BY	APVD
0	12/10/2018	ISSUED FOR CONSTRUCTION	TT	JG

T Tadano
DESIGNED
M Howard / A Vogenthaler
DRAWN
J Garcia
CHECKED
TECH. APPR.
APPROVED
ADMIN APPROVAL - TITLE

FARMINGTON, NM 2019-02-08

REACH 21 PIPELINE

WALL ANCHOR
BLOCK & PIPE
TRANSITION DETAILS

850-C-3304

SHEET 374 OF 405

DATE AND TIME PLOTTED
2/8/19 8:00
PLOTTED BY
atav

CAD SYSTEM
AUTOCAD
CAD FILENAME
Reach 21 Block and Anchor Details.dwg

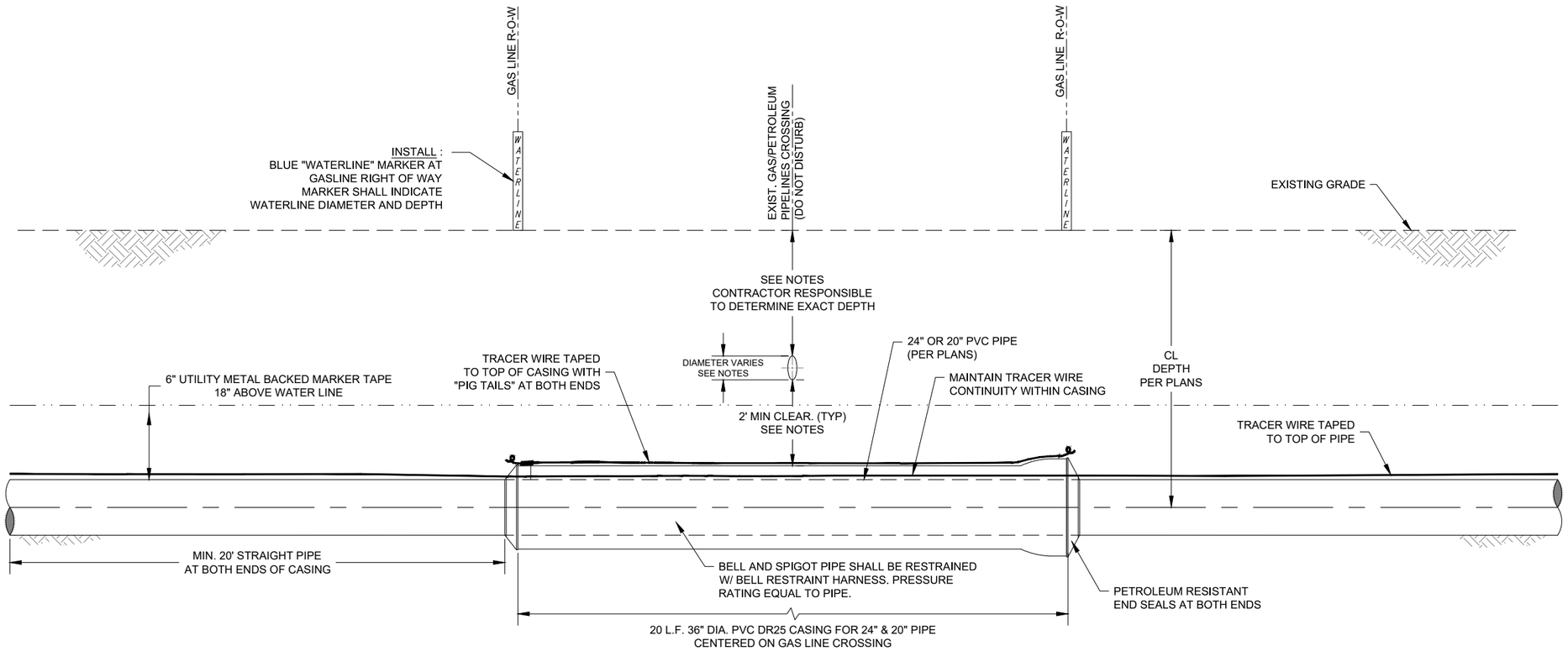

TYPICAL SINGLE GAS PIPELINE CROSSING DETAIL

NOT TO SCALE

SPECIAL NOTES AND CONTACTS-UTILITY PIPELINE CROSSINGS

NOTES:

1. ALL DEPTHS AND LOCATIONS OF EXISTING UTILITIES ARE APPROXIMATE. CONTRACTOR RESPONSIBLE TO DETERMINE EXACT LOCATION, DEPTH AND SIZE OF ALL BURIED UTILITY LINES AND TO COMPLY WITH ALL REQUIREMENTS SET FORTH IN THE ENCROACHMENT AGREEMENTS PROVIDED BY UTILITY LINE OPERATORS AND IN THE DETAILS AND SPECIAL NOTES OF THESE DRAWINGS.
2. NOTIFY GAS LINE COMPANIES (LISTED BELOW) 30 WORKING DAYS AND CALL NM ONE-CALL AT LEAST 3 WORKING DAYS PRIOR TO GRADING, CROSSING, MATERIAL STORAGE OR EQUIPMENT MOVING ACROSS GAS LINE RIGHT-OF-WAY OR ADJACENT ACCESS ROADS.
3. GAS LINE COMPANY REPRESENTATIVE MUST BE PRESENT DURING ALL CONSTRUCTION ACTIVITIES WITHIN GAS LINE RIGHT-OF-WAY, INCLUDING GRADING, EXCAVATION AND CLEANUP.
4. CONTRACTOR RESPONSIBLE TO LOCATE AND EXPOSE ALL EXISTING GAS / PETROLEUM LINES, IN ACCORDANCE WITH GAS COMPANY REQUIREMENTS.
5. EXCAVATE BY HAND OR VACUUM DRILL, ETC WITHIN 2 FEET OF GAS LINE, OR MORE IF GAS LINE COMPANY REQUIRES, WHICHEVER IS STRICTER.
6. CROSS UNDER ALL GAS LINES. 2' MIN. CLEARANCE FROM TOP OF CASING TO BOTTOM OF GAS LINE.
7. CONTRACTOR SHALL NOT SUSPEND EXISTING GAS LINE PIPE MORE THAN 12 FEET WITHOUT SOIL BEDDING OR OTHER SUPPORT APPROVED BY GAS LINE COMPANY.
8. CONTRACTOR SHALL COMPLETE ANY AND ALL ENCROACHMENT AGREEMENTS REQUIRED BY GAS LINE COMPANIES. ABIDE BY ALL CONDITIONS STIPULATED BY GAS LINE COMPANIES.
9. HEAVY EQUIPMENT MUST CROSS PIPELINE ONLY AT CROSSING LOCATIONS APPROVED BY GAS LINE COMPANIES.
10. CARRIER PIPE WITHIN A 200 FT. RADIUS OF GAS LINE SHALL BE BELL-AND-SPIGOT PVC WITH PETROLEUM RESISTANT GASKETS.
11. TRACER WIRE CONTINUITY SHALL BE MAINTAINED ACROSS THE GAS LINE XING.
12. APPROXIMATE DEPTH CALL OUTS ARE MEASURED FROM THE EXISTING GROUND TO THE TOP OF PIPE.
13. PETROLEUM RESISTANT GASKETS TO BE USED WITHIN 200' RADIUS OF GAS LINE CROSSING.
14. PVC PIPE WITHIN CASING TO BE RESTRAINED WITH BELL RESTRAINT HARNESSES.

GAS LINE CROSSINGS

(1) = STA: 26+98 (APPROX.)
ENTERPRISE MID AMERICA PIPELINE CO. 1-800-203-1347
JOHNNY SANDOVAL - FIELD CONTACT 505-320-1629
GAS PIPELINE (6 5/8" O.D., 3'-7" BURY DEPTH)
SEC-9, T-25-N, R-8-W

(2) = STA: 53+97 (APPROX.)
ENTERPRISE MID AMERICA PIPELINE CO. 1-800-203-1347
JOHNNY SANDOVAL - FIELD CONTACT 505-320-1629
GAS PIPELINE (4 1/2" O.D., 4'-6" BURY DEPTH)
SEC-9, T-25-N, R-8-W

(3) = STA: 147+74 (APPROX.)
ENTERPRISE MID AMERICA PIPELINE CO. 1-800-203-1347
JOHNNY SANDOVAL - FIELD CONTACT 505-320-1629
GAS PIPELINE (4 1/2" O.D., 2'-4" BURY DEPTH)
SEC-18, T-25-N, R-8-W

(4) = STA: 168+54 (APPROX.)
ENTERPRISE MID AMERICA PIPELINE CO. 1-800-203-1347
JOHNNY SANDOVAL - FIELD CONTACT 505-320-1629
GAS PIPELINE (4 1/2" O.D., 2'-8" BURY DEPTH)
SEC-18, T-25-N, R-8-W

(5) = STA: 198+66 (APPROX.)
WILLIAMS SERVICES 505-632-4632
CHRISTOPHER LUCERO - FIELD CONTACT 505-632-4463
GAS PIPELINE (8" O.D. STEEL, 4'-10" BURY DEPTH)
SEC-18, T-25-N, R-8-W

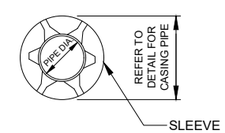

SECTION A-A

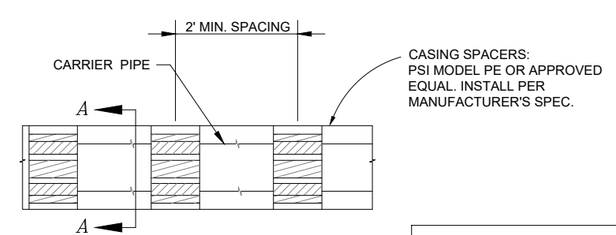

PIPE CASING DETAIL

NOT TO SCALE

TORY T. TADANO
NEW MEXICO
21073
LICENSED PROFESSIONAL ENGINEER
11/28/18

RECLAMATION
Managing Water in the West

SMA
Engineering • Environmental Surveying

ALWAYS THINK SAFETY

U.S. DEPARTMENT OF THE INTERIOR
BUREAU OF RECLAMATION
NAVAJO-GALLUP WATER SUPPLY PROJECT
NEW MEXICO

CUTTER LATERAL - REACH 21

WATER PIPELINE

NO.	DATE	REVISION	BY	APV'D
0	12/10/2018	ISSUED FOR CONSTRUCTION	TT	JG

T Tadano
DESIGNED
M Howard / A Vogenthaler
DRAWN
J Garcia
CHECKED
TECH. APPR.
APPROVED
ADMIN APPROVAL - TITLE

FARMINGTON, NM 2018-11-28

REACH 21 PIPELINE

GAS LINE CROSSING DETAILS

850-C-3305

SHEET 375 OF 405

DATE AND TIME PLOTTED 11/28/18
PLOTTED BY aav

CAD SYSTEM AUTOCAD
CAD FILENAME Reach 21 Pipeline X-ings.dwg

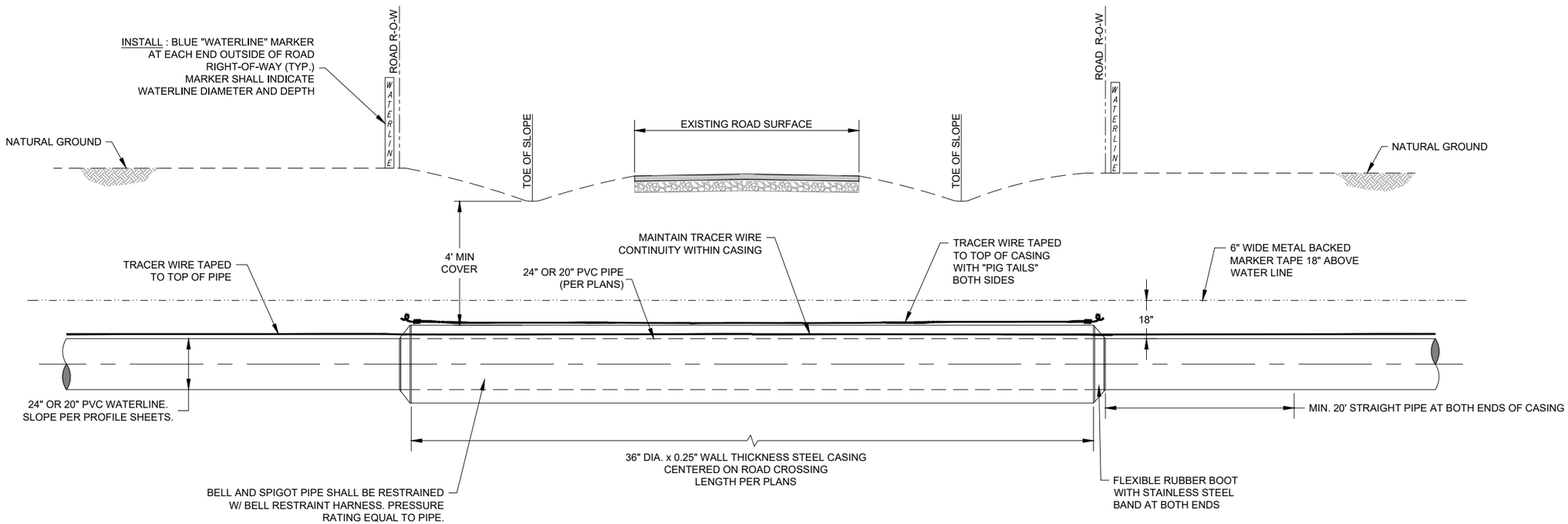

TYPICAL OPEN CUT ROAD CROSSING

NOT TO SCALE

CONSTRUCTION NOTES:

1. EXCAVATIONS OUTSIDE THE ROADWAY FORESLOPES SHALL BE COMPACTED AS SPECIFIED IN THE CONSTRUCTION DOCUMENTS. EXCAVATION WITHIN THE TOE OF THE FORESLOPES SHALL BE COMPACTED TO 95% MAXIMUM DRY DENSITY (STANDARD PROCTOR).
2. APPLY CATHODIC PROTECTION TO ALL BURIED METALLIC CASINGS LOCATED WITHIN CORROSIVE SOIL ZONES, AS DESIGNATED IN THE PLANS AND/OR SPECIFICATIONS.
3. ALL METALLIC PIPE, WHETHER CATHODICALLY PROTECTED OR NOT, SHALL BE PROVIDED WITH CORROSION MONITORING SYSTEMS.
4. TRACER WIRE CONTINUITY SHALL BE MAINTAINED ACROSS THE ROAD XING.
5. FOR MINIMUM PVC PIPE THRUST BLOCKING REQUIREMENTS ON EACH SIDE OF CASING, SEE SCHEDULE SHEET 850-C-3304.
6. PVC PIPE WITHIN CASING TO BE RESTRAINED WITH BELL RESTRAINT HARNESSES.
7. FOR SAN JUAN COUNTY ROADS, ADHERE TO ANY ADDITIONAL CROSSING PERMIT REQUIREMENTS.

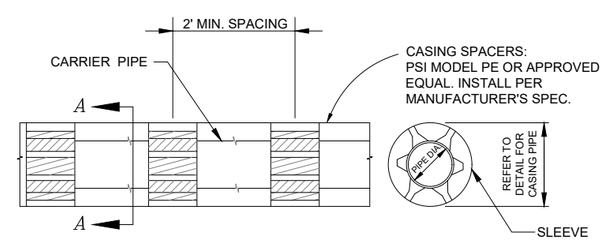

PIPE CASING DETAIL

NOT TO SCALE

SECTION A-A

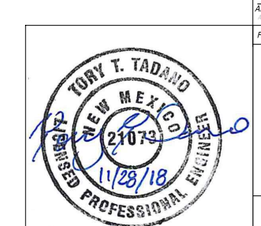

RECLAMATION
Managing Water in the West

SMA
Engineering • Environmental Surveying

ALWAYS THINK SAFETY

U.S. DEPARTMENT OF THE INTERIOR
BUREAU OF RECLAMATION
NAVAJO-GALLUP WATER SUPPLY PROJECT
NEW MEXICO

CUTTER LATERAL - REACH 21

WATER PIPELINE

NO.	DATE	REVISION	BY	APV'D
0	12/10/2018	ISSUED FOR CONSTRUCTION	TT	JG

T Tadano
DESIGNED
M Howard / A Vogenthaler
DRAWN
J Garcia
CHECKED
TECH. APPR.
APPROVED
ADMIN APPROVAL TITLE

FARMINGTON, NM 2018-11-28

REACH 21 PIPELINE

ROAD CROSSING DETAILS

850-C-3306

SHEET 376 OF 405

DATE AND TIME PLOTTED 11/28/18
PLOTTED BY aav

CAD SYSTEM AUTOCAD
CAD FILENAME Reach 21 Pipeline X-ings.dwg

KEYED NOTES - PIPELINE BUTTERFLY VALVE

Item No.	Description
1	24" (SHOWN) OR 20" FL x FL BUTTERFLY VALVE W/ MANUAL BURIED SERVICE ACTUATOR AWWA C504, CLASS 150
2	4" FL x MJ GATE VALVE, 250 psi
3	24" x 6" (SHOWN) OR 20" x 6" D.I. REDUCING TEE, FLANGED, 250 psi
4	24" (SHOWN) OR 20" MJ FLANGE ADAPTER, FBE COATED, W/ SS 304 BOLTS, MEGAFLANGE SERIES 2100, OAE, 235 psi
5	CAST IRON SLIP TYPE VALVE BOX WITH LOCKING COVER
6	9" O.D. STAINLESS STEEL ORIFICE PLATE TO MATCH 4" FLANGE (SEE DETAIL / TABLE THIS SHEET)
7	4" D.I. 90° ELL, FLANGED, 250 psi
8	4" D.I. SPOOL, FL x PLAIN END, 250 psi
9	18" DIA. HEAVY DUTY, TRAFFIC-RATED METER CAN (PAINTED BLUE) W/ LOCKING COVER AND FORMED CONCRETE COLLAR, (W/ #4 REBAR)
10	9" O.D. STAINLESS STEEL SPACER TO MATCH 4" FLANGE, 3/8" THICK
11	6" x 4" D.I. REDUCING TEE, FLANGED, 250 psi
12	12" x 6" x 6" CONCRETE BLOCK
13	CAST IRON SLIP TYPE VALVE BOX WITH LOCKING COVER, PAINTED BLUE

NOTES:

1. ALL BURIED METALLIC PIPE, VALVES AND FITTINGS SHALL BE COATED WITH FUSION BONDED EPOXY, INTERIOR AND EXTERIOR. ALL BURIED METALLIC PIPE SHALL ALSO BE COLD-APPLIED TAPE-COATED, PER SPECIFICATIONS.
2. APPLY CATHODIC PROTECTION TO ALL BURIED METALLIC PRESSURE-BEARING COMPONENTS LOCATED WITHIN CORROSIVE SOIL ZONES, AS DESIGNATED IN THE PLANS AND/OR SPECIFICATIONS.
3. FLANGES SHALL BE ANSI CLASS 125 (IRON).
4. CONTRACTOR SHALL SCRIBE ALL CONCRETE COLLARS PER DETAIL THIS SHEET. CONCRETE SHALL BE SCRIBED PRIOR TO CURING, OR ETCHED AFTER CURING WITH 4" GRINDER.
5. CONTRACTOR SHALL LEAVE A 3/4" MIN. TO 1" MAX. GAP BETWEEN PVC PIPE END AND FLANGE FACE INSIDE MJ FLANGE ADAPTER, TO FACILITATE FUTURE DISASSEMBLY.
6. ALL MATERIALS RATED TO AT LEAST 235 psi UNLESS OTHERWISE NOTED.
7. WRAP BOTTOM OF BOX IN PLASTIC TO PREVENT DIRT FROM ENTERING.

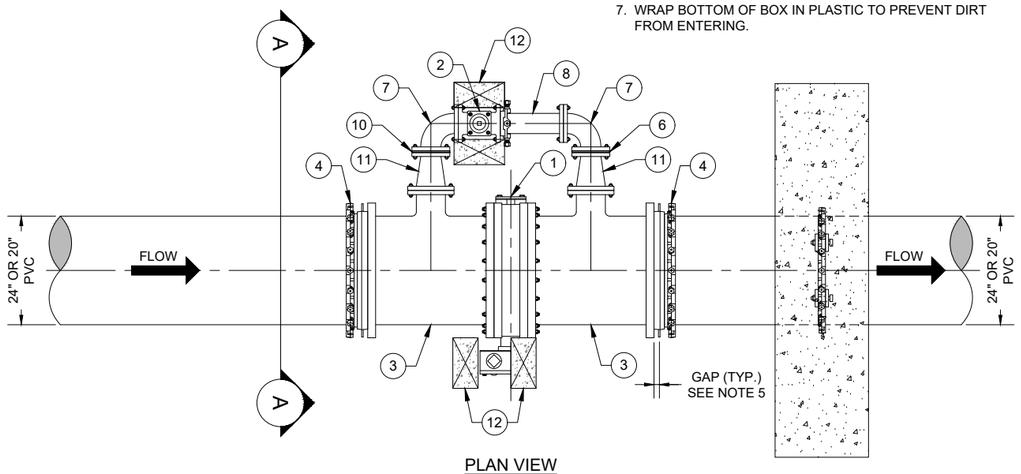

PLAN VIEW

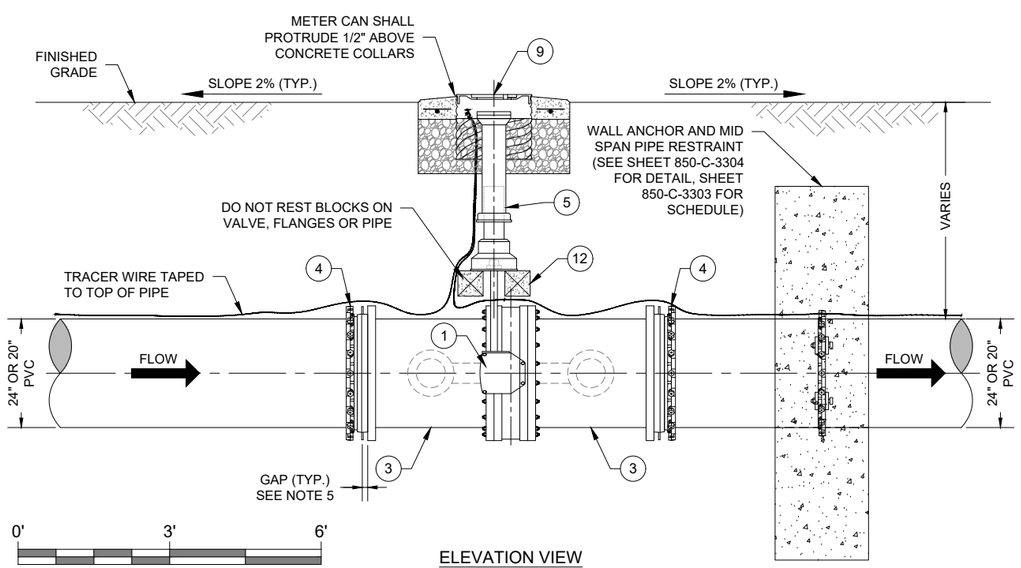

ELEVATION VIEW

TYPICAL 24" (SHOWN) OR 20" PIPELINE BUTTERFLY VALVE ASSEMBLY WITH BYPASS

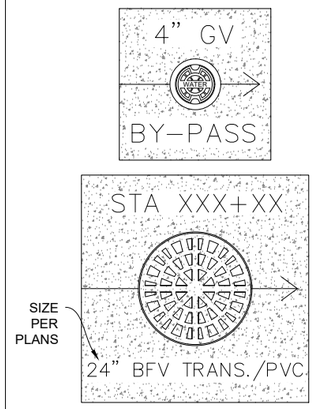

CONCRETE COLLAR ETCHING DETAIL

NOT TO SCALE

SUMMARY OF BUTTERFLY VALVE ORIFICE PLATE DRILLING		
Station	Elevation	Orifice Plate Ø of Hole (Inches)
25+25	6619	3.23
71+79	6677	2.07
99+34	6723	2.18
149+58	6840	2.47
199+35	6890	2.71

NOTE:
HOLE TO BE DRILLED CENTERED ON THE ORIFICE PLATE.

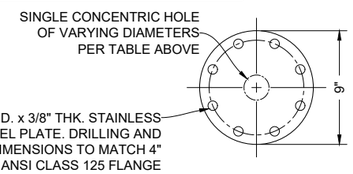

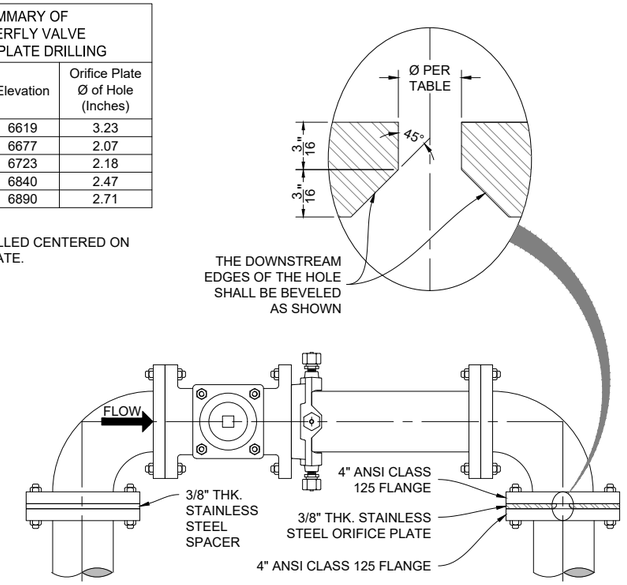

ORIFICE PLATE ASSEMBLY

NOT TO SCALE

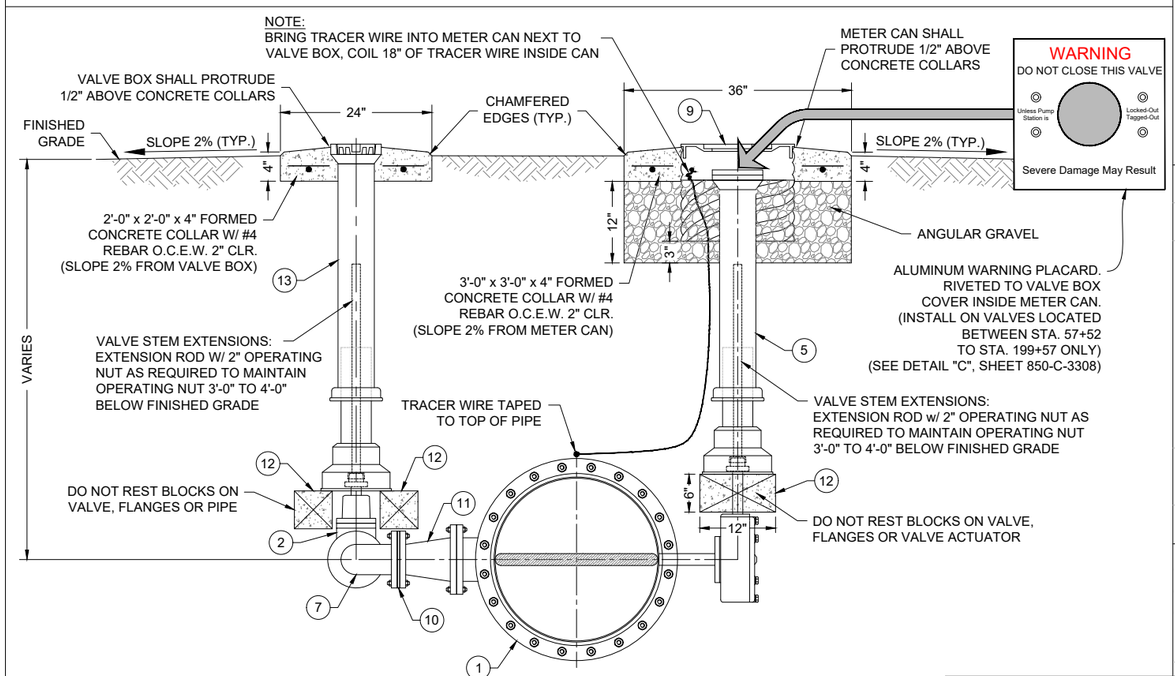

SECTION "A-A"

TYPICAL 24" (SHOWN) OR 20" PIPELINE BUTTERFLY VALVE ASSEMBLY WITH BY-PASS

RECLAMATION
Managing Water in the West

SMA
Engineering • Environmental • Surveying

ALWAYS THINK SAFETY

U.S. DEPARTMENT OF THE INTERIOR
BUREAU OF RECLAMATION
NAVAJO-GALLUP WATER SUPPLY PROJECT
NEW MEXICO

CUTTER LATERAL - REACH 21

WATER PIPELINE

NO.	DATE	REVISION	BY	APV'D
0	12/10/2018	ISSUED FOR CONSTRUCTION	TT	JG

T Tadano
DESIGNED
M Howard / A Vogenthaler
DRAWN
J Garcia
CHECKED
TECH. APPR.
APPROVED
ADMIN APPROVAL - TITLE

FARMINGTON, NM 2018-11-28

TORY T. TADANO
NEW MEXICO
21073
LICENSED PROFESSIONAL ENGINEER
11/28/18

REACH 21 PIPELINE

PIPELINE BUTTERFLY VALVE DETAILS

850-C-3307

SHEET 377 OF 405

DATE AND TIME PLOTTED 11/28/18
PLOTTED BY aav

CAD SYSTEM AUTOCAD
CAD FILENAME Reach 21 BV Details.dwg

NOTES:

1. CONTRACTOR SHALL SCRIBE ALL CONCRETE VALVE COLLARS, PER DETAILS "A" & "B" THIS SHEET. CONCRETE SHALL BE SCRIBED PRIOR TO CURING OR ETCHED AFTER CURING WITH 4" GRINDER.
2. AFFIX WARNING PLACARD TO VALVE BOX COVER INSIDE METER CAN FOR ALL MAINLINE VALVES.
3. AFFIX ALUMINUM VALVE IDENTIFICATION PLATES TO ALL SITE VALVE COLLARS, PER DETAILS "B" & "C" THIS SHEET. REFER TO SHEET 900-C-3004 FOR VALVE-SPECIFIC LABELING.
4. ALL MATERIALS SHALL BE WORKING PRESSURE RATED TO AT LEAST THE PRESSURE RATING OF THE PIPE, UNLESS OTHERWISE NOTED.
5. ALL BURIED VALVES SHALL BE COATED WITH FUSION BONDED EPOXY, INTERIOR AND EXTERIOR.
6. NOTE VALVE ENDS SHALL BE FL x FL, MJ x MJ, OR FL x MJ AS INDICATED ON PLANS.
7. APPLY CATHODIC PROTECTION TO ALL BURIED METALLIC PRESSURE-BEARING COMPONENTS LOCATED WITHIN CORROSIVE SOIL ZONES, AS DESIGNATED IN THE PLANS AND/OR SPECIFICATIONS.
8. FLANGES SHALL BE ANSI CLASS 125 (IRON).

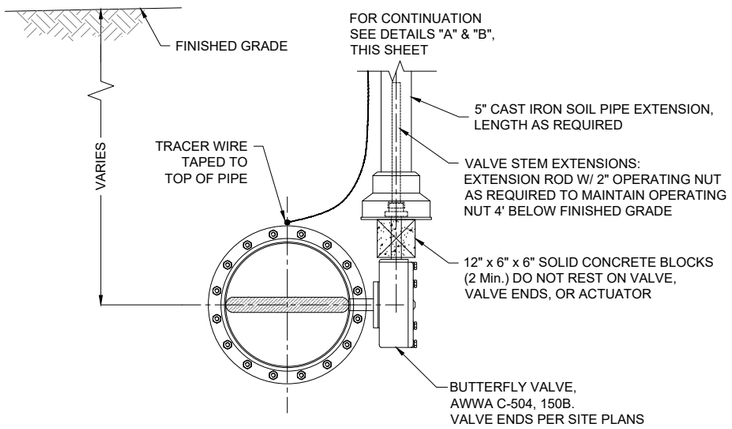

END VIEW

TYPICAL SITE BUTTERFLY VALVE DETAIL WITHOUT BYPASS

NOT TO SCALE

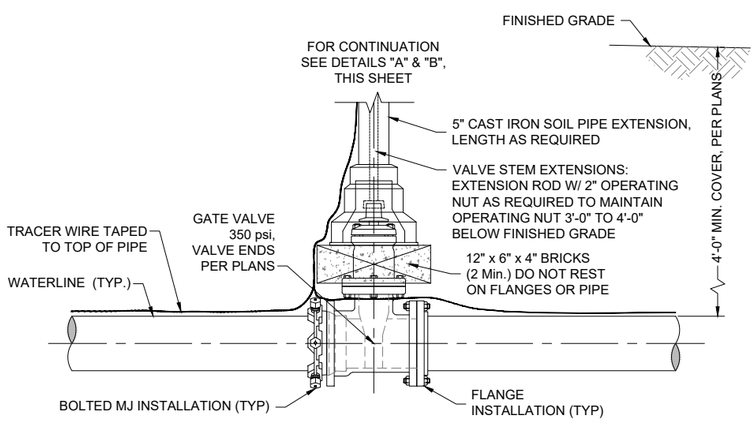

ELEVATION VIEW

TYPICAL GATE VALVE DETAIL

NOT TO SCALE

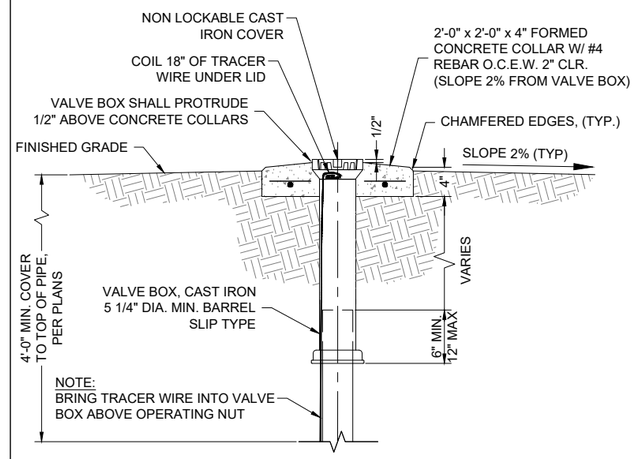

ELEVATION VIEW

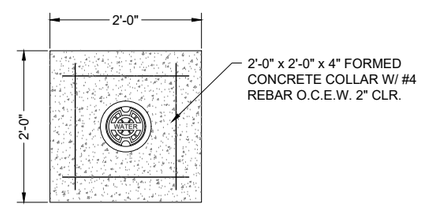

PLAN VIEW - REBAR

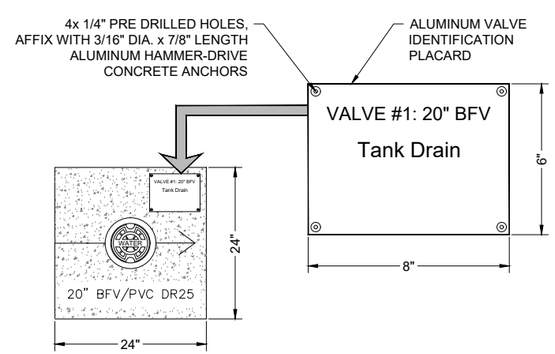

PLAN VIEW - SURFACE

DETAIL "A" TYPICAL SITE VALVE BOX, COLLAR AND VALVE ID PLACARD DETAIL, USE WITHOUT WARNING PLACARD

NOT TO SCALE

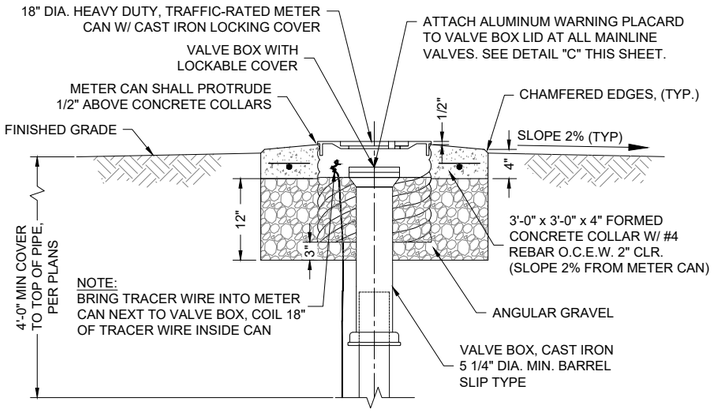

ELEVATION VIEW

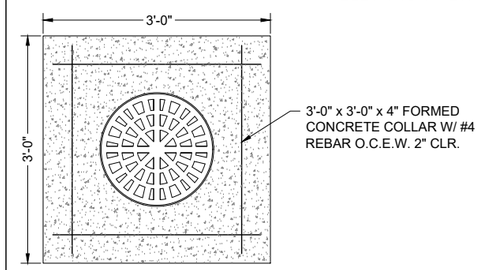

PLAN VIEW - REBAR

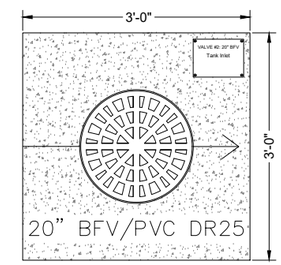

PLAN VIEW - SURFACE SITE VALVE COLLAR

DETAIL "B" TYPICAL SITE VALVE BOX, COLLAR AND VALVE ID PLACARD DETAIL - USE WITH WARNING PLACARD

NOT TO SCALE

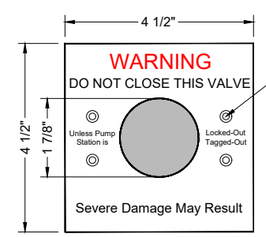

WARNING PLACARD "C-1" FOR VALVES

4x (#30 (0.1285" DIA.)) PRE DRILLED HOLES, SECURE WITH 1/8" DIA. x 1/4" GRIP ALUMINUM POP RIVETS

NOTE: INSTALL ON SITE VALVES PER SHT. 900-C-3004 AND MAINLINE VALVES LOCATED BETWEEN STA. 57+52 TO STA. 199+57 ONLY

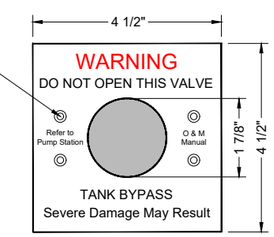

WARNING PLACARD "C-2" FOR VALVES

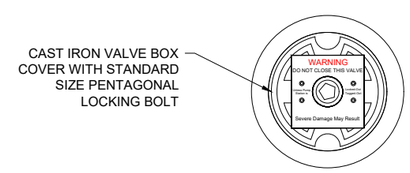

PLAN VIEW

DETAIL "C" TYPICAL WARNING PLACARD DETAIL

NOT TO SCALE

RECLAMATION
Managing Water in the West

SMA
Engineering • Environmental Surveying

ALWAYS THINK SAFETY

U.S. DEPARTMENT OF THE INTERIOR
BUREAU OF RECLAMATION
NAVAJO-GALLUP WATER SUPPLY PROJECT
NEW MEXICO

CUTTER LATERAL - REACH 21

WATER PIPELINE

NO.	DATE	REVISION	BY	APV'D
0	12/10/2018	ISSUED FOR CONSTRUCTION	TT	JG

T Tadano
DESIGNED
M Howard / A Vogenthaler
DRAWN
J Garcia
CHECKED
TECH. APPR.
APPROVED
ADMIN APPROVAL - TITLE

FARMINGTON, NM 2018-11-28

TONY T. TADANO
NEW MEXICO
21073
LICENSED PROFESSIONAL ENGINEER
11/28/18

REACH 21 PIPELINE

SITE BUTTERFLY & GATE VALVE DETAILS

850-C-3308

SHEET 378 OF 405

DATE AND TIME PLOTTED 11/28/18
PLOTTED BY alav

CAD SYSTEM AUTOCAD
CAD FILENAME Reach 21 BV Detail.dwg

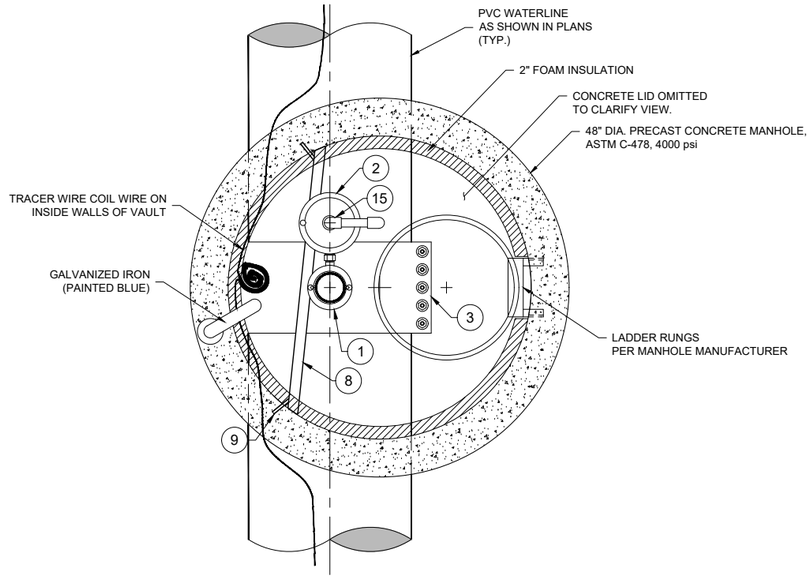

PLAN VIEW

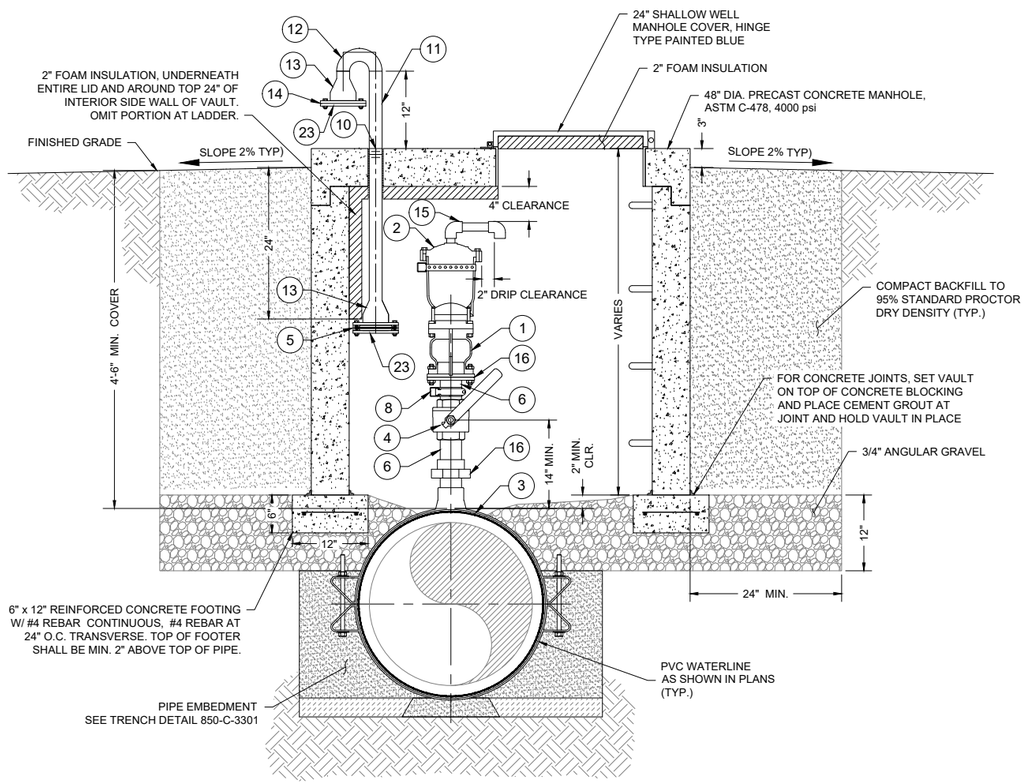

ELEVATION VIEW

VACUUM RELIEF VALVE DETAIL

0' 1' 2'

KEYED NOTES - 3" VACUUM RELIEF WITH 2" AIR RELEASE VALVE

Item No.	Description
1	3" VALMATIC MODEL NO. 1803AVB.3XF VACUUM RELIEF VALVE, WITH SCREENED HOOD, 200 psi
2	2" VALMATIC MODEL NO. 45.5XFSV AIR RELEASE VALVE, 300 psi
3	24" x 3" (SHOWN) OR 20" x 3" TAPPING SLEEVE, FNPT, 250 psi.
4	3" BALL VALVE, STAINLESS STEEL, NPT, 250 psi
5	4" FREEZE PREVENTION DRAFT DAMPENER. VALMATIC FROSTSAFE MODEL # 1504, OAE
6	3" NIPPLE, SS 304, NPT
7	GALVANIZED PERFORATED METAL HANGER STRAP
8	1 5/8" STAINLESS STEEL UNI-STRUT
9	2" ANCHOR BOLTS IN EPOXY
10	VENT PIPE W/ EMBEDDED 2" GALVANIZED IRON THREADED COUPLING (PIPE EXTERIOR PAINTED BLUE)
11	2" STD. GALVANIZED IRON PIPE THREADED AT ONE END (PIPE EXTERIOR PAINTED BLUE)
12	2" GALVANIZED IRON LONG RADIUS WELDED RETURN (PIPE EXTERIOR PAINTED BLUE)
13	4" x 2" GALVANIZED IRON WELDED REDUCER (PIPE EXTERIOR PAINTED BLUE)
14	VARMINT SCREEN
15	1" DOWN SPOUT W/ SCREEN, SCHEDULE 80 PVC
16	3" HART MODEL D-3231 DIELECTRIC UNION, MNPT x FNPT, CLASS 3000
17	1" NIPPLE, SS 304, NPT
18	1" BALL VALVE, SS 304, NPT, 250 psi
19	1" TEE, SS 304, NPT, SCHEDULE 40
20	1" x 1/2" REDUCING BUSHING, SS 304, NPT
21	1/2" BALL VALVE, SS 304, NPT, 250 psi
22	1/2" PIPE, SS 304, NPT
23	4" GALVANIZED IRON COMPANION FLANGE, DRILLED/TAPPED TO FIT
24	2" x 1" REDUCER, SS 304, NPT, SCHEDULE 40

NOTES:

1. ALL FLANGES SHALL BE ANSI CLASS 150 (STEEL) OR ANSI CLASS 125 (IRON).
2. ALL NON-STAINLESS METALLIC PIPE, VALVES AND FITTINGS SHALL BE FBE-COATED, INTERIOR AND EXTERIOR. ALL NON-STAINLESS METALLIC PIPE IN CONTACT WITH SOIL SHALL ALSO BE COLD APPLIED TAPE-COATED PER AWWA C209.
3. AIR VALVE TO BE LOCATED IN FIELD BY ENGINEER.
4. COIL TRACER WIRE ON INSIDE WALLS OF VAULT.
5. ALL STAINLESS STEEL PIPE AND FITTINGS SHALL BE STANDARD WALL.
6. REMOVE ALL PVC CUTTINGS FROM INSIDE MAIN LINE AFTER TAPPING.
7. CONTRACTOR SHALL ETCH ALL VACUUM RELIEF VAULT LIDS WITH 4" GRINDER AS FOLLOWS: PIPE STATION, VALVE SIZE, "ARV, VB", PIPE SIZE AND MATERIAL, WITH DIRECTIONAL ARROWS.
8. DO NOT TAP RESTRAINED PIPE.
9. APPLY CATHODIC PROTECTION TO ALL BURIED NON-STAINLESS METALLIC COMPONENTS LOCATED WITHIN CORROSIVE SOIL ZONES, AS DESIGNATED IN THE PLANS AND/OR SPECIFICATIONS.
10. ALL MATERIALS RATED TO AT LEAST 150 psi UNLESS OTHERWISE NOTED.

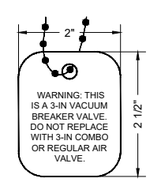

HANG FROM 3" VACUUM BREAKER VALVE

VALVE WARNING TAG DETAIL

N.T.S.

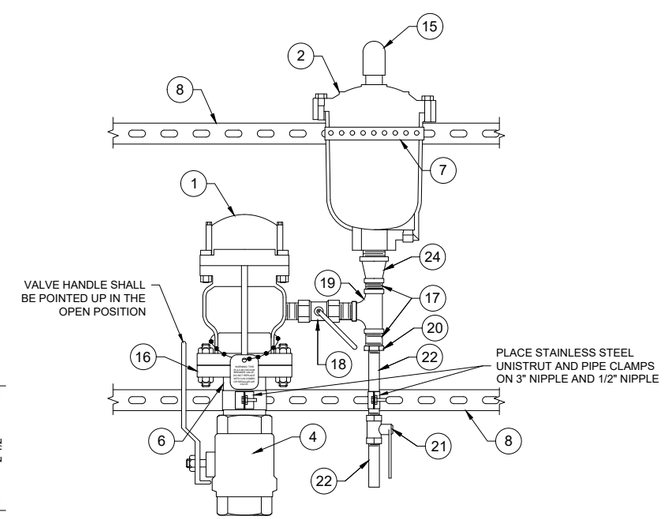

FRONT ELEVATION VIEW

VACUUM RELIEF VALVE DETAIL

N.T.S.

RECLAMATION
Managing Water in the West

SMA
Engineering • Environmental Surveying

ALWAYS THINK SAFETY

U.S. DEPARTMENT OF THE INTERIOR
BUREAU OF RECLAMATION
NAVAJO-GALLUP WATER SUPPLY PROJECT
NEW MEXICO

CUTTER LATERAL - REACH 21

WATER PIPELINE

NO.	DATE	REVISION	BY	APV'D
0	12/10/2018	ISSUED FOR CONSTRUCTION	TT	JG

T Tadano
DESIGNED
M Howard / A Vogenthaler
DRAWN
J Garcia
CHECKED
TECH. APPR.
APPROVED
ADMIN APPROVAL — TITLE

FARMINGTON, NM 2018-11-28

TORY T. TADANO
NEW MEXICO
21073
LICENSED PROFESSIONAL ENGINEER
11/28/18

REACH 21 PIPELINE

3-INCH VACUUM RELIEF
WITH 2-INCH AIR
RELEASE VALVE DETAIL

850-C-3309

SHEET 379 OF 405

DATE AND TIME PLOTTED
11/28/18
PLOTTED BY
aav

CAD SYSTEM
AUTOCAD
CAD FILENAME
Reach 21 Air Valve Details.dwg

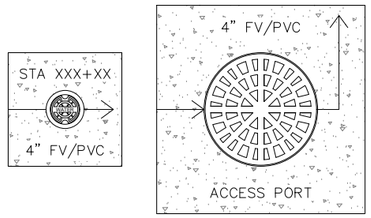

NOTE:
CONCRETE SHALL BE SCRIBED PRIOR TO CURING OR ETCHED AFTER CURING WITH A 4" GRINDER.

COLLAR SCRIBING DETAIL
NOT TO SCALE

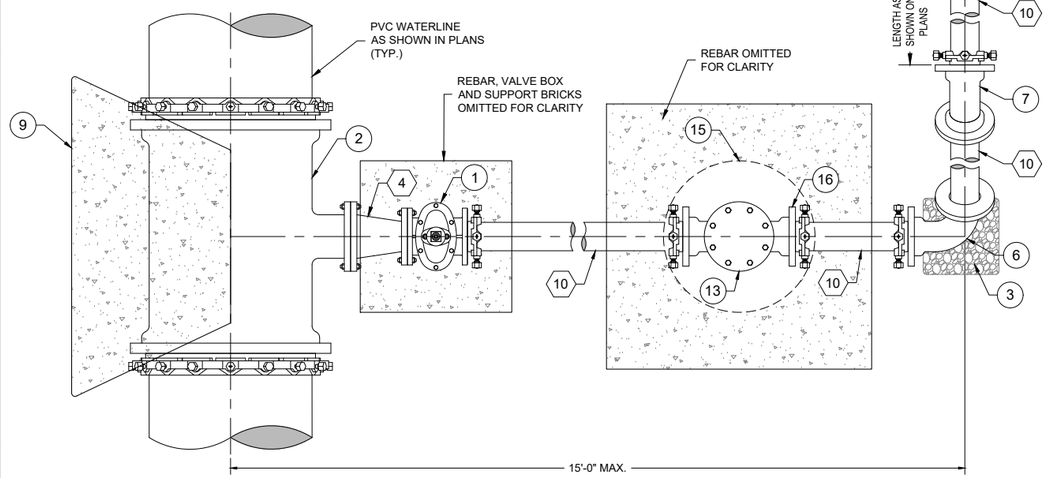

PLAN VIEW

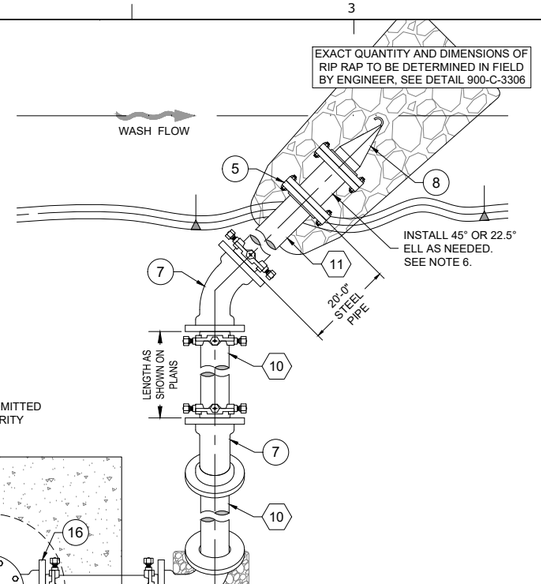

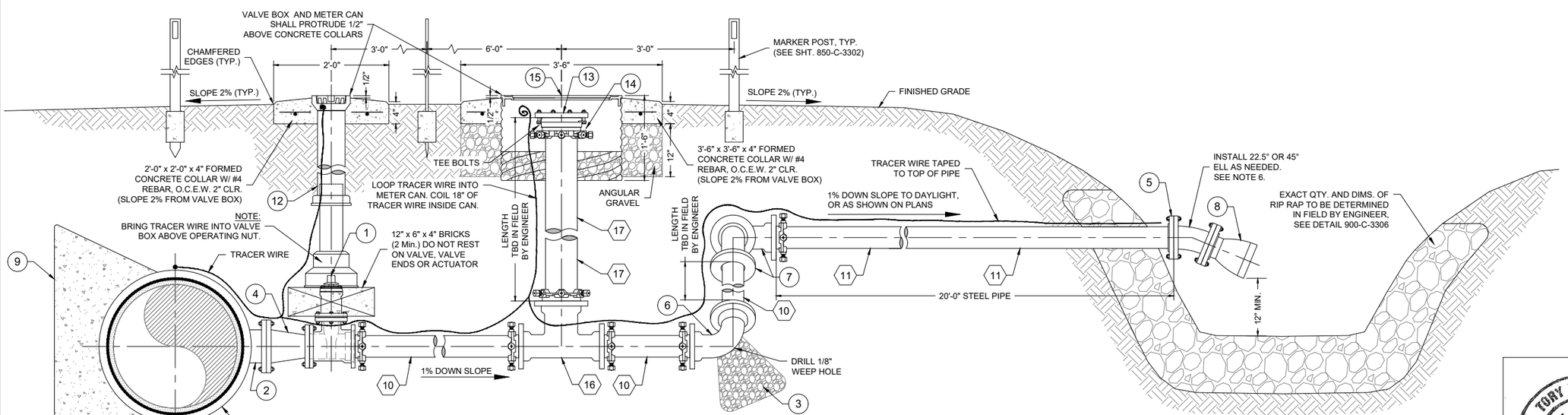

ELEVATION VIEW
(VIEW OF WASH ROTATED FOR CLARITY)

0' 1' 2'

4" FLUSH VALVE WITH RISER DETAIL

KEYED NOTES - 4" FLUSH VALVE WITH RISER

Item No.	DESCRIPTION
1	4" GATE VALVE, FL x MJ, 350 psi (SEE TYPICAL GATE VALVE DETAIL, SHEET 850-C-3308)
2	24" x 6" (SHOWN) OR 20" x 6" MJ x FL REDUCING TEE, D.I., 250 psi
3	ROUNDED ROCK (2 CU. YD.)
4	6" x 4" FL x FL REDUCER, D.I., 250 psi
5	4" STEEL FLANGE, FLAT FACED, ANSI CLASS 150
6	4" 90° MJ ELL, D.I., 350 psi (ROTATED 45° TOWARDS FINISHED GRADE)
7	4" 45° MJ ELL, D.I., 350 psi
8	4" FLANGED RUBBER CHECK VALVE, ANSI CLASS 150
9	2'-0" x 2'-0" THRUST BLOCK
10	4" PVC PIPE, DR18
11	4" STEEL PIPE, STANDARD WALL
12	VALVE BOX SLIP TYPE WITH LOCKING CAST IRON COVER (SEE TYPICAL GATE VALVE DETAIL, SHEET 850-C-3308)
13	6" BLIND FLANGE, FLAT FACED, ANSI CLASS 150
14	6" ANSI CLASS 125 FLANGE ADAPTER, MEGAFLANGE SERIES 2100 W/ TEE BOLTS POINTED
15	24" DIA. HEAVY DUTY, TRAFFIC-RATED METER CAN W/ 20 3/8" Ø OPENING WITH CAST IRON LOCKING COVER AND FORMED CONCRETE COLLAR, (W/ #4 REBAR), DASHED FOR CLARITY
16	4" x 4" x 6" MJ BULLHEAD TEE OR 4" x 4" x 4" MJ TEE W/ 6" x 4" MJ REDUCER, D.I., 350 psi
17	6" PVC PIPE, DR18

NOTES:
1. ALL NON STAINLESS METALLIC PIPE, VALVES AND FITTINGS SHALL BE FBE-COATED, INTERIOR AND EXTERIOR. ALL NON STAINLESS METALLIC PIPE IN CONTACT WITH SOIL SHALL ALSO BE COLD APPLIED TAPE-COATED PER SPECIFICATIONS.
2. ORIENTATION AND LOCATION OF OUTLET TO BE DETERMINED IN FIELD BY ENGINEER.
3. APPLY CATHODIC PROTECTION TO ALL BURIED METALLIC WATER-CARRYING COMPONENTS LOCATED WITHIN CORROSIVE SOIL ZONES, AS DESIGNATED IN THE PLANS AND/OR SPECIFICATIONS.
4. ALL NON STAINLESS STEEL PIPE AND FITTINGS SHALL BE STANDARD WALL. ALL STAINLESS STEEL PIPE AND FITTINGS SHALL HAVE A WORKING PRESSURE OF AT LEAST 350 psi, UNLESS OTHERWISE NOTED.
5. ALL COMPONENTS SHALL REMAIN WITHIN THE PERMANENT RIGHT-OF-WAY. 4" PVC PIPING PARALLEL TO MAIN LINE SHALL BE ANGLED SLIGHTLY TOWARD MAIN LINE, AS NEEDED, SO THAT RUBBER CHECK VALVE REMAINS WITHIN PERMANENT RIGHT-OF-WAY.
6. INSTALL 22.5° OR 45° ELL AT PIPE OUTLET AS NEEDED TO DIRECT WATER FLOW INTO THE RIPRAP. DO NOT ALLOW WATER OUTFLOW TO HIT UNARMORED SOIL.
7. ALL MATERIALS RATED TO AT LEAST MAINLINE PIPE PRESSURE RATING, UNLESS OTHERWISE NOTED.
8. MECHANICAL JOINTS OMITTED FROM ISOMETRIC VIEWS FOR CLARITY.
9. STATIONS OF TEES AND HEIGHT OF RISERS FOR FLUSH VALVES SHOWN ON PLAN AND PROFILE SHEETS ARE APPROXIMATE. CONTRACTOR SHALL ENSURE FLUSH DRAIN LINE OUTFALLS HAVE MINIMUM REQUIRED CLEARANCE TO RIPRAP AT WASH BOTTOMS. CONTRACTOR MAY ADJUST TEE LOCATIONS AND/OR RISER HEIGHTS AS NEEDED TO PROVIDE ADEQUATE OUTFALL HEIGHT, DRAIN PIPE SLOPE, AND COVER.

RECLAMATION
Managing Water in the West

SMA
Engineering • Environmental • Surveying

ALWAYS THINK SAFETY

U.S. DEPARTMENT OF THE INTERIOR
BUREAU OF RECLAMATION
NAVAJO-GALLUP WATER SUPPLY PROJECT
NEW MEXICO

CUTTER LATERAL - REACH 21

WATER PIPELINE

NO.	DATE	REVISION	BY	APV'D
0	12/10/2018	ISSUED FOR CONSTRUCTION	TT	JG

T Tadano
DESIGNED
M Howard / A Vogenthaler
DRAWN
J Garcia
CHECKED
TECH. APPR.
APPROVED
ADMIN APPROVAL - TITLE

FARMINGTON, NM 2018-11-28

TORY T. TADANO
NEW MEXICO
21073
11/28/18
LICENSED PROFESSIONAL ENGINEER

REACH 21 PIPELINE

4-INCH FLUSH VALVE WITH RISER DETAIL

850-C-3310

SHEET 380 OF 405

DATE AND TIME PLOTTED 11/28/18
PLOTTED BY aav

CAD SYSTEM AUTOCAD
CAD FILENAME Reach 21 Flush Valve Details.dwg

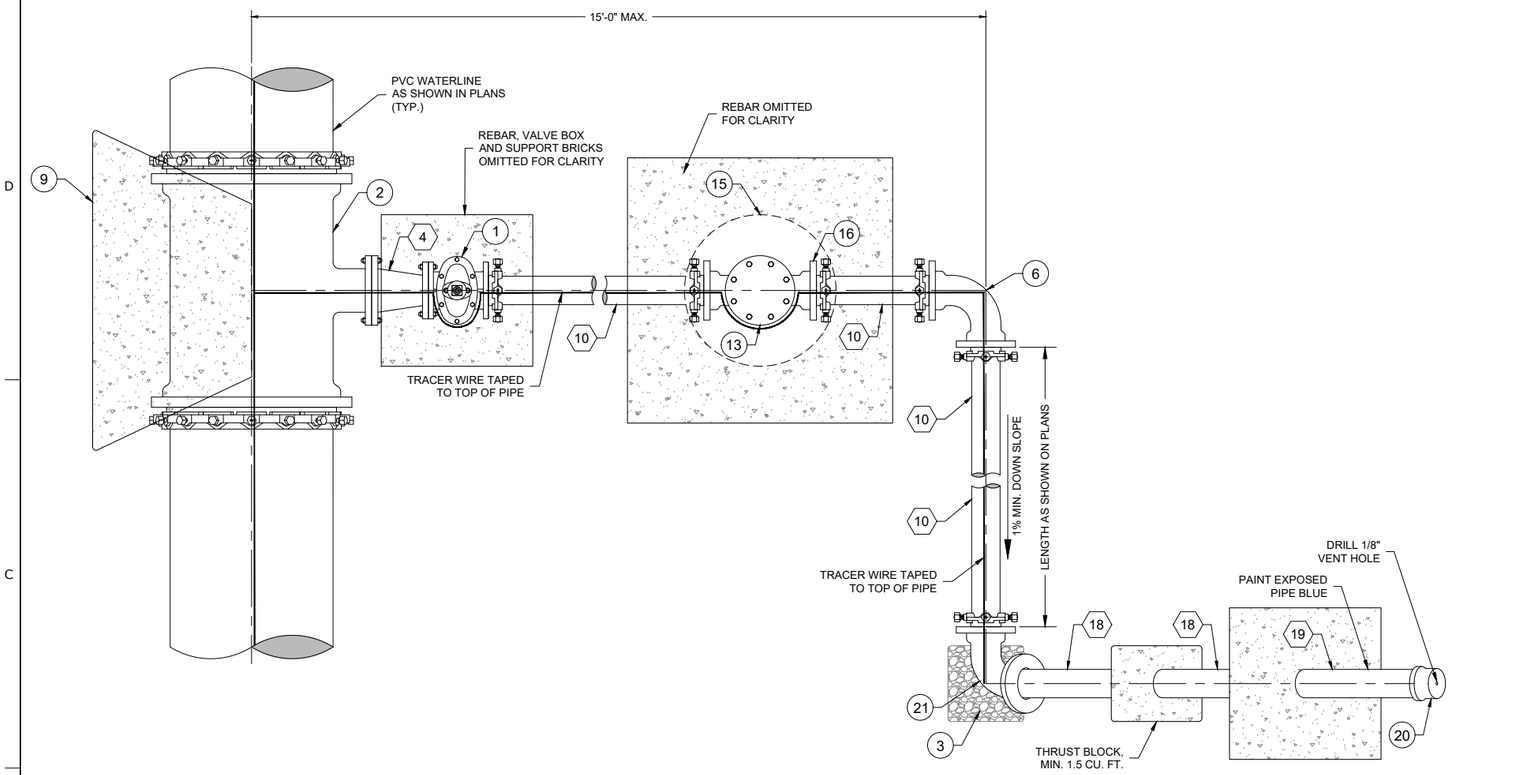

PLAN VIEW

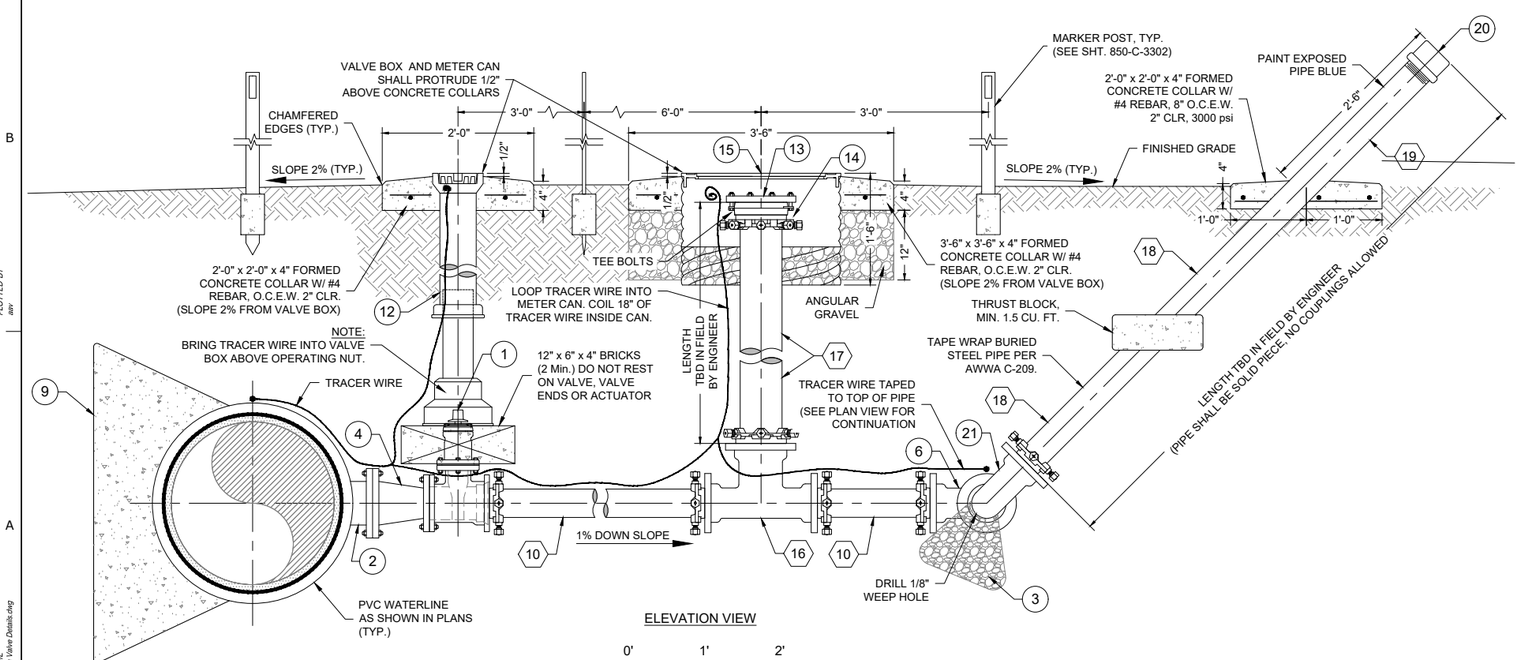

ELEVATION VIEW

0' 1' 2'

4" FLUSH VALVE WITH ABOVE GRADE DISCHARGE DETAIL

KEYED NOTES - 4" FLUSH VALVE WITH ABOVE GRADE DISCHARGE

Item No.	DESCRIPTION
1	4" GATE VALVE, FL x MJ, 350 psi (SEE TYPICAL GATE VALVE DETAIL, SHEET 850-C-3308)
2	24" x 6" (SHOWN) OR 20" x 6" MJ x FL REDUCING TEE, D.I., 250 psi
3	ROUNDED ROCK (2 CU. YD.)
4	6" x 4" FL x FL REDUCER, D.I., 250 psi
5	4" STEEL FLANGE, FLAT FACED, ANSI CLASS 150
6	4" 90° MJ ELL, D.I., 350 psi
7	4" 45° MJ ELL, D.I., 350 psi
8	4" FLANGED RUBBER CHECK VALVE, ANSI CLASS 150
9	2'-0" x 2'-0" THRUST BLOCK
10	4" PVC PIPE, DR18
11	4" STEEL PIPE, STANDARD WALL
12	VALVE BOX SLIP TYPE WITH LOCKING CAST IRON COVER (SEE TYPICAL GATE VALVE DETAIL, SHEET 850-C-3308)
13	6" BLIND FLANGE, FLAT FACED, ANSI CLASS 150
14	6" ANSI CLASS 125 FLANGE ADAPTER, MEGAFLANGE SERIES 2100 W/ TEE BOLTS POINTED
15	24" DIA. HEAVY DUTY, TRAFFIC-RATED METER CAN W/ 20 3/8" Ø OPENING WITH CAST IRON LOCKING COVER AND FORMED CONCRETE COLLAR, (W/ #4 REBAR), DASHED FOR CLARITY
16	4" x 4" x 6" MJ BULLHEAD TEE OR 4" x 4" x 4" MJ TEE W/ 6" x 4" MJ REDUCER, D.I., 350 psi
17	6" PVC PIPE, DR18
18	4" G.I. PIPE, STANDARD WALL, NPT, TAPE COATED BELOW GRADE
19	4" G.I. PIPE, STANDARD WALL, NPT, PAINTED BLUE ABOVE GRADE
20	4" G.I. CAP, NPT, 300 psi, W/ 1/8" VENT HOLE
21	4" 90° MJ ELL, D.I., 350 psi (ROTATED 45° TOWARDS FINISHED GRADE)

NOTES:

1. ALL NON STAINLESS METALLIC PIPE, VALVES AND FITTINGS SHALL BE FBE-COATED, INTERIOR AND EXTERIOR. ALL NON STAINLESS METALLIC PIPE IN CONTACT WITH SOIL SHALL ALSO BE COLD APPLIED TAPE-COATED PER SPECIFICATIONS.
2. ORIENTATION AND LOCATION OF OUTLET TO BE DETERMINED IN FIELD BY ENGINEER.
3. APPLY CATHODIC PROTECTION TO ALL BURIED METALLIC WATER-CARRYING COMPONENTS LOCATED WITHIN CORROSIVE SOIL ZONES, AS DESIGNATED IN THE PLANS AND/OR SPECIFICATIONS.
4. ALL NON STAINLESS STEEL PIPE AND FITTINGS SHALL BE STANDARD WALL. ALL STAINLESS STEEL PIPE AND FITTINGS SHALL HAVE A WORKING PRESSURE OF AT LEAST 350 psi, UNLESS OTHERWISE NOTED.
5. ALL COMPONENTS SHALL REMAIN WITHIN THE PERMANENT RIGHT-OF-WAY. 4" PVC PIPING PARALLEL TO MAIN LINE SHALL BE ANGLED SLIGHTLY TOWARD MAIN LINE, AS NEEDED, SO THAT DISCHARGE PIPE AND CAP REMAIN WITHIN PERMANENT RIGHT-OF-WAY.
6. ALL MATERIALS RATED TO AT LEAST MAINLINE PIPE PRESSURE RATING, UNLESS OTHERWISE NOTED.
7. MECHANICAL JOINTS OMITTED FROM ISOMETRIC VIEWS FOR CLARITY.

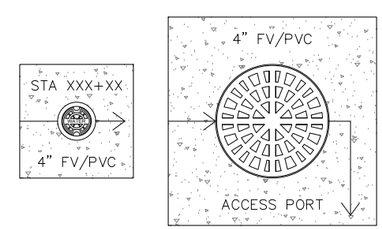

COLLAR SCRIBING DETAIL

NOT TO SCALE

NOTE:
CONCRETE SHALL BE SCRIBED PRIOR TO CURING OR ETCHED AFTER CURING WITH A 4" GRINDER.

RECLAMATION
Managing Water in the West

SMA
Engineering • Environmental Surveying

ALWAYS THINK SAFETY

U.S. DEPARTMENT OF THE INTERIOR
BUREAU OF RECLAMATION
NAVAJO-GALLUP WATER SUPPLY PROJECT
NEW MEXICO

CUTTER LATERAL - REACH 21

WATER PIPELINE

NO.	DATE	REVISION	BY	APV'D
0	12/10/2018	ISSUED FOR CONSTRUCTION	TT	JG

T Tadano
DESIGNED
M Howard / A Vogenthaler
DRAWN
J Garcia
CHECKED
TECH. APPR.
APPROVED
ADMIN APPROVAL - TITLE

FARMINGTON, NM 2018-11-28

TORY T. TADANO
NEW MEXICO
21073
LICENSED PROFESSIONAL ENGINEER
11/28/18

REACH 21 PIPELINE

4-INCH FLUSH VALVE WITH ABOVE GRADE DISCHARGE DETAIL

850-C-3311

SHEET 381 OF 405

DATE AND TIME PLOTTED 11/28/18
PLOTTED BY aav
CAD SYSTEM AUTOCAD
CAD FILENAME Reach 21 Flush Valve Details.dwg

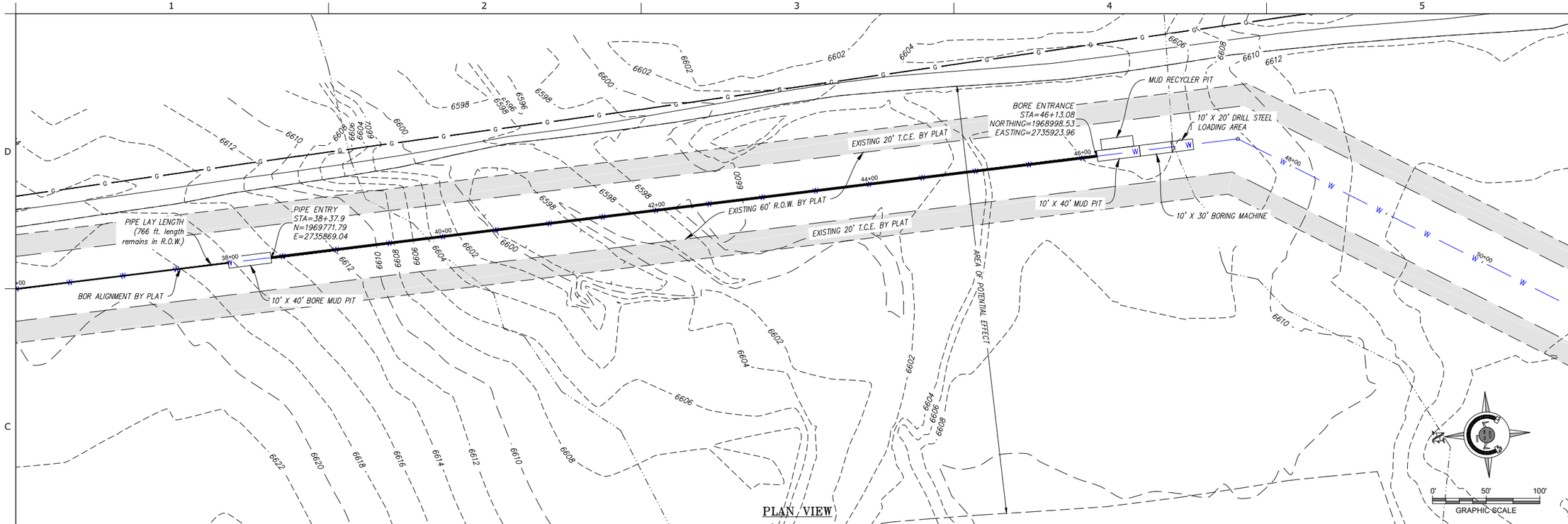

PLAN VIEW

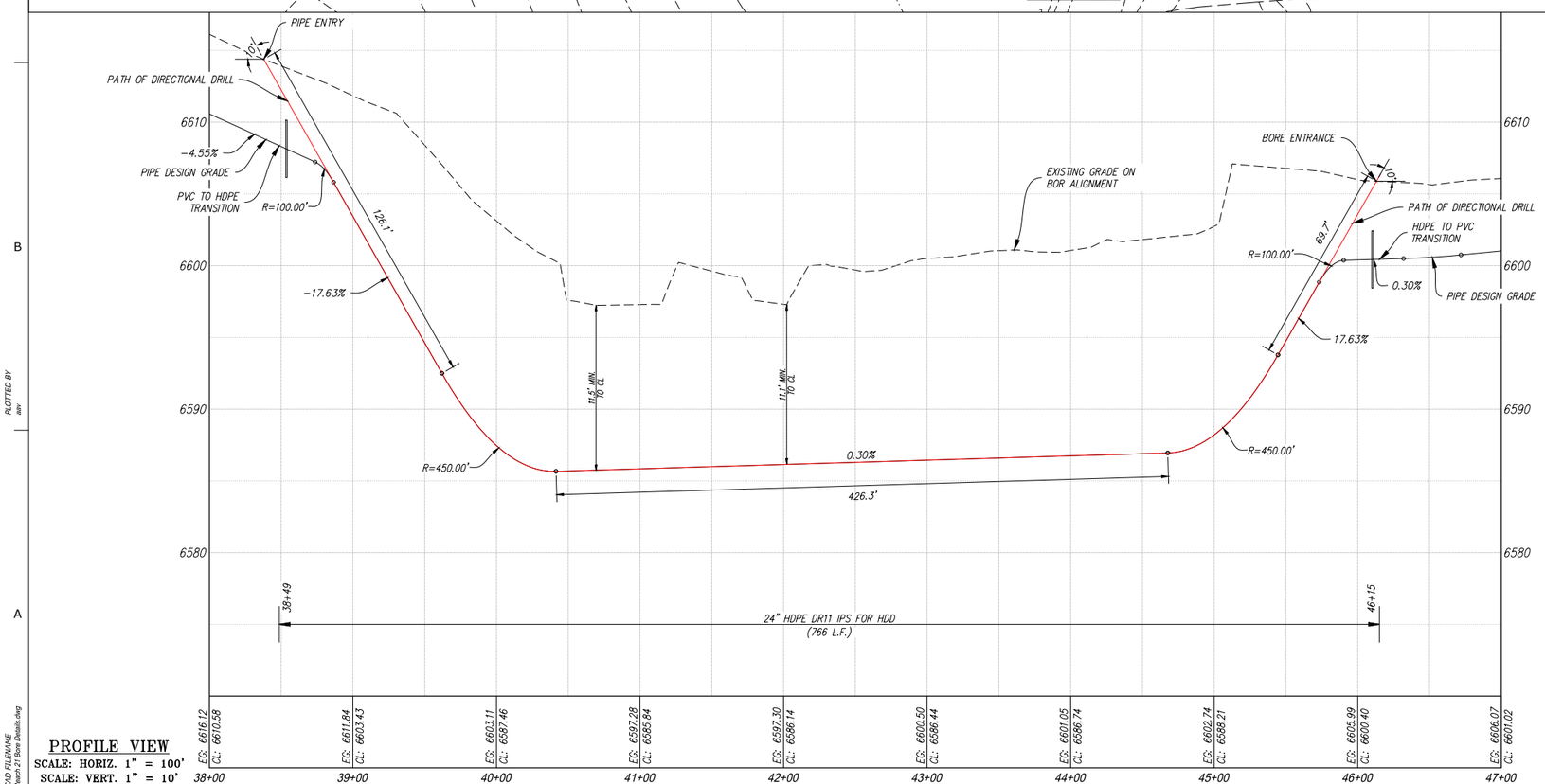

PROFILE VIEW
SCALE: HORIZ. 1" = 100'
SCALE: VERT. 1" = 10'

NOTES:
1. HORIZONTAL DIRECTIONAL DRILLING
   MINIMUM ALLOWABLE BEND RADIUS = 300'
2. OPEN CUT
   MINIMUM ALLOWABLE BEND RADIUS = 100'
3. HDPE PIPE TO BE PRESSURE TESTED ABOVE GROUND PRIOR TO INSTALLATION PER TECHNICAL SPECIFICATIONS.
4. HDPE LENGTH SHOWN IS TRANSITION FROM PVC TO HDPE. DETERMINING THE ACTUAL HDPE STRING LENGTH REQUIRED TO INSTALL SHALL BE THE CONTRACTOR'S RESPONSIBILITY.

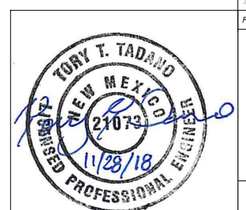

RECLAMATION
Managing Water in the West

SMA
Engineering • Environmental Surveying

ALWAYS THINK SAFETY

U.S. DEPARTMENT OF THE INTERIOR
BUREAU OF RECLAMATION
NAVAJO-GALLUP WATER SUPPLY PROJECT
NEW MEXICO

CUTTER LATERAL - REACH 21

WATER PIPELINE

NO.	DATE	REVISION	BY	APV'D
0	12/10/2018	ISSUED FOR CONSTRUCTION	TT	JG

T Tadano
DESIGNED
M Howard / A Vogenthaler
DRAWN
J Garcia
CHECKED
TECH. APPR.
APPROVED
ADMIN APPROVAL — TITLE

FARMINGTON, NM 2018-11-28

REACH 21 PIPELINE

WASH CROSSING STA
42+02 PIPELINE HDD
DETAIL

850-C-3312

SHEET 382 OF 405

DATE AND TIME PLOTTED 11/28/18
PLOTTED BY aav
CAD SYSTEM AUTOCAD
CAD FILENAME Reach 21 Bore Details.dwg

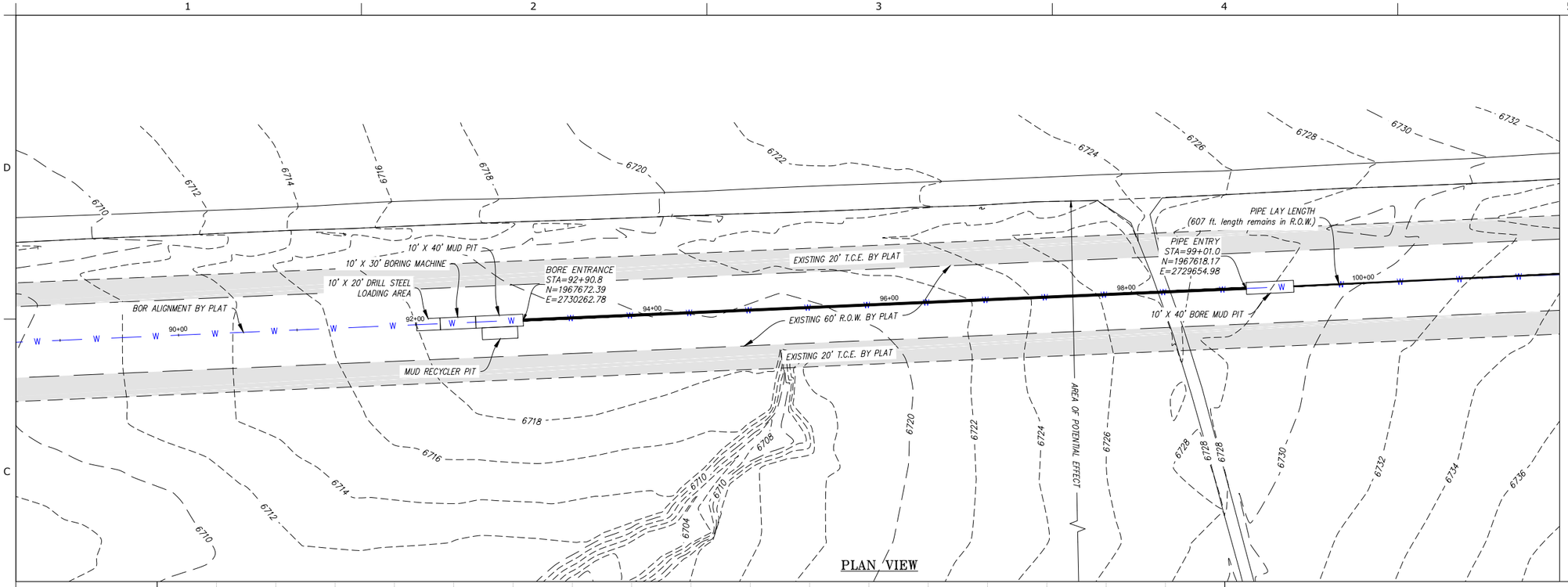

PLAN VIEW

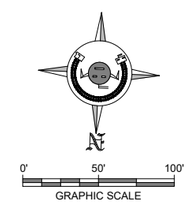

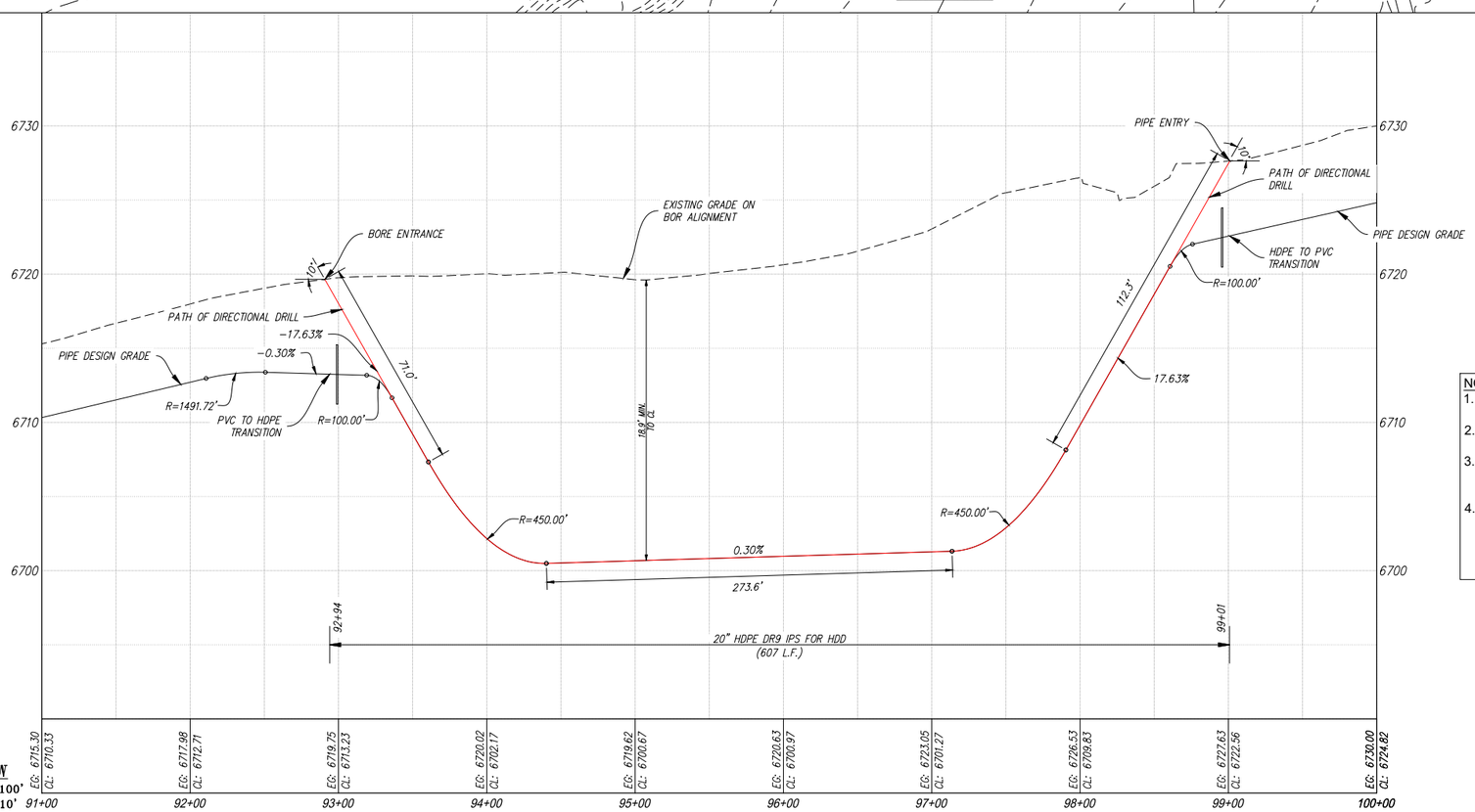

PROFILE VIEW
SCALE: HORIZ. 1" = 100'
SCALE: VERT. 1" = 10'

NOTES:
1. HORIZONTAL DIRECTIONAL DRILLING MINIMUM ALLOWABLE BEND RADIUS = 300'
2. OPEN CUT MINIMUM ALLOWABLE BEND RADIUS = 100'
3. HDPE PIPE TO BE PRESSURE TESTED ABOVE GROUND PRIOR TO INSTALLATION PER TECHNICAL SPECIFICATIONS.
4. HDPE LENGTH SHOWN IS TRANSITION FROM PVC TO HDPE. DETERMINING THE ACTUAL HDPE STRING LENGTH REQUIRED TO INSTALL SHALL BE THE CONTRACTOR'S RESPONSIBILITY.

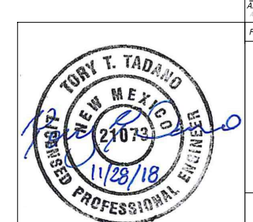

RECLAMATION
Managing Water in the West

SMA
Engineering • Environmental Surveying

ALWAYS THINK SAFETY

U.S. DEPARTMENT OF THE INTERIOR
BUREAU OF RECLAMATION
NAVAJO-GALLUP WATER SUPPLY PROJECT
NEW MEXICO

CUTTER LATERAL - REACH 21

WATER PIPELINE

NO.	DATE	REVISION	BY	APV'D
0	12/10/2018	ISSUED FOR CONSTRUCTION	TT	JG

T Tadano
DESIGNED
M Howard / A Vogenthaler
DRAWN
J Garcia
CHECKED
TECH. APPR.
APPROVED
ADMIN APPROVAL - TITLE

FARMINGTON, NM 2018-11-28

REACH 21 PIPELINE

WASH CROSSING STA 95+37 PIPELINE HDD DETAIL

850-C-3313

SHEET 383 OF 405

DATE AND TIME PLOTTED 11/28/18
PLOTTED BY aav

CAD SYSTEM AUTOCAD
CAD FILENAME Reach 21 Bore Details.dwg

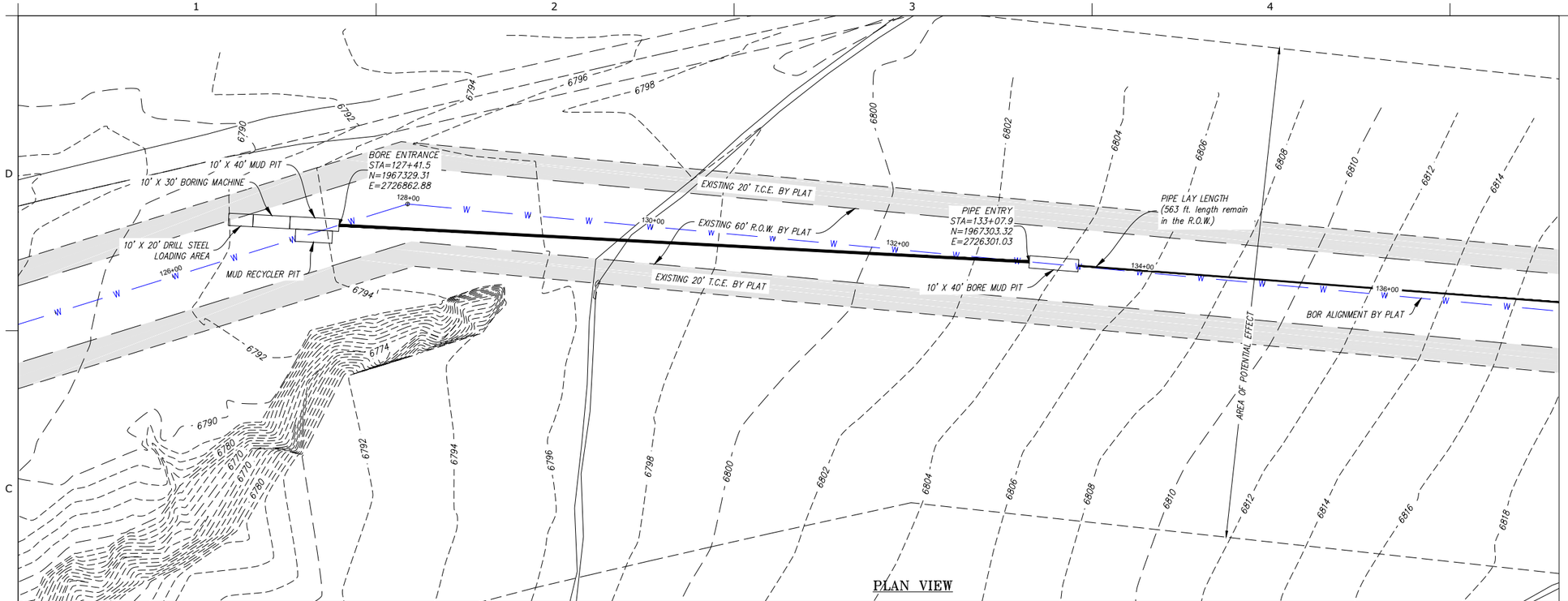

PLAN VIEW

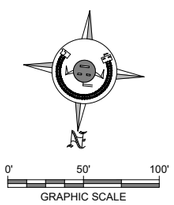

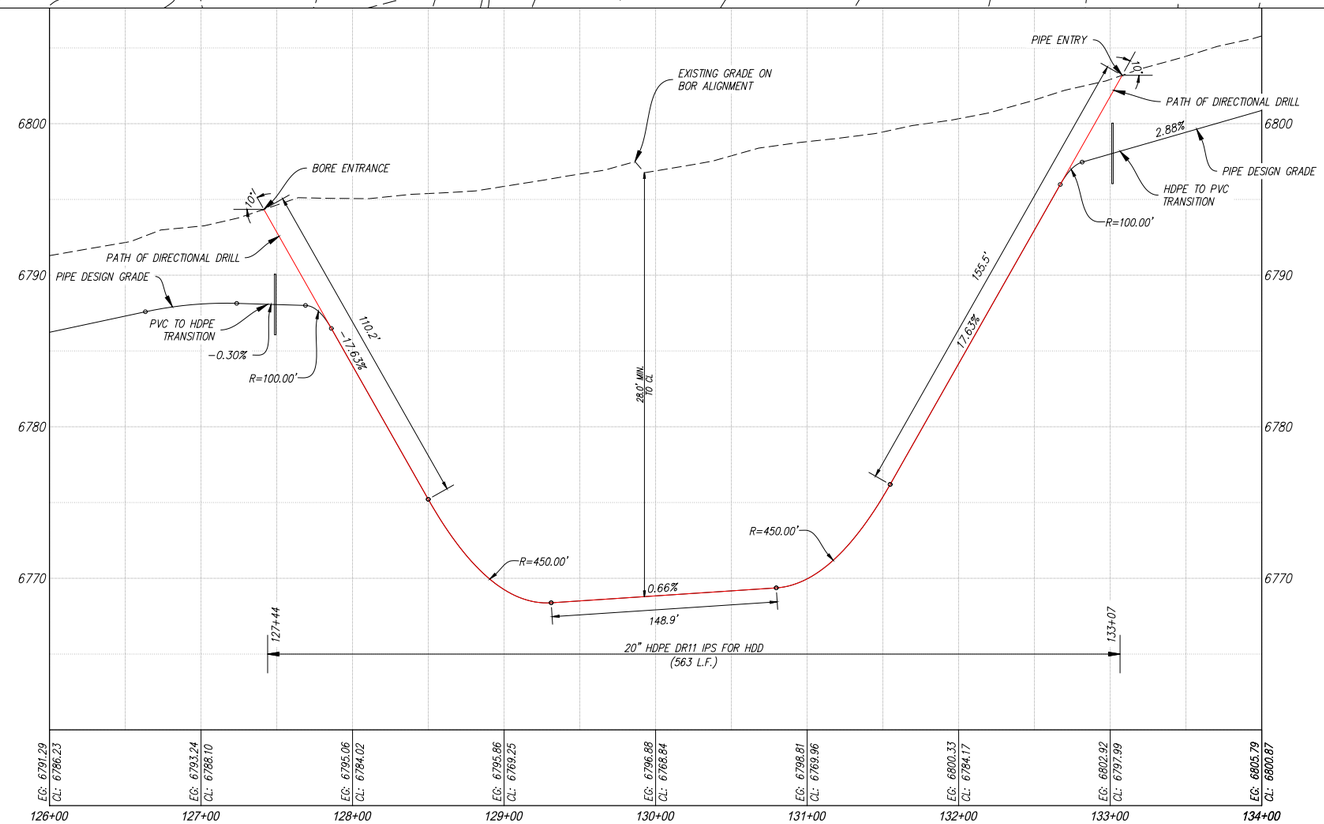

PROFILE VIEW
SCALE: HORIZ. 1" = 100'
SCALE: VERT. 1" = 10'

NOTES:
1. HORIZONTAL DIRECTIONAL DRILLING MINIMUM ALLOWABLE BEND RADIUS = 300'
2. OPEN CUT MINIMUM ALLOWABLE BEND RADIUS = 100'
3. HDPE PIPE TO BE PRESSURE TESTED ABOVE GROUND PRIOR TO INSTALLATION PER TECHNICAL SPECIFICATIONS.
4. HDPE LENGTH SHOWN IS TRANSITION FROM PVC TO HDPE. DETERMINING THE ACTUAL HDPE STRING LENGTH REQUIRED TO INSTALL SHALL BE THE CONTRACTOR'S RESPONSIBILITY.

TORY T. TADANO
NEW MEXICO
21073
11/28/18
LICENSED PROFESSIONAL ENGINEER

RECLAMATION
Managing Water in the West

SMA
Engineering • Environmental Surveying

ALWAYS THINK SAFETY

U.S. DEPARTMENT OF THE INTERIOR
BUREAU OF RECLAMATION
NAVAJO-GALLUP WATER SUPPLY PROJECT
NEW MEXICO

CUTTER LATERAL - REACH 21

WATER PIPELINE

NO.	DATE	REVISION	BY	APV'D
0	12/10/2018	ISSUED FOR CONSTRUCTION	TT	JG

T Tadano
DESIGNED
M Howard / A Vogenthaler
DRAWN
J Garcia
CHECKED
TECH. APPR.
APPROVED
APPROVAL - TITLE
FARMINGTON, NM 2018-11-28

REACH 21 PIPELINE

WASH CROSSING STA 129+92 PIPELINE HDD DETAIL

850-C-3314

SHEET 384 OF 405

DATE AND TIME PLOTTED 11/28/18
PLOTTED BY aav

CAD SYSTEM AUTOCAD
CAD FILENAME Reach 21 Bore Details.dwg

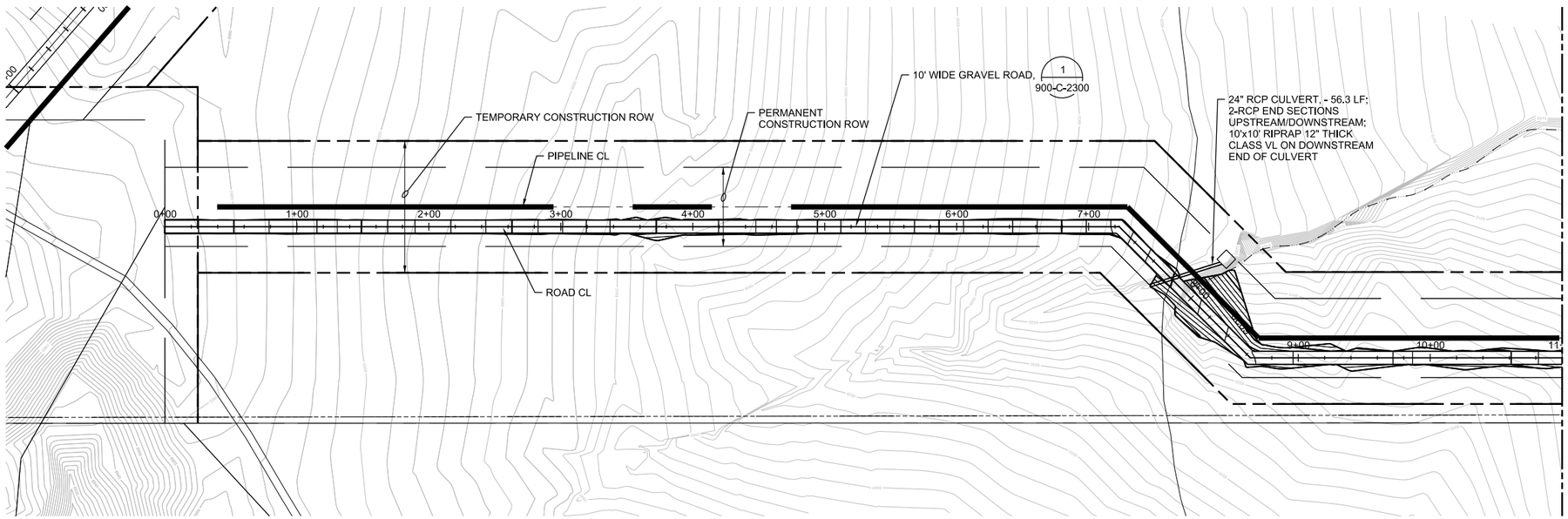

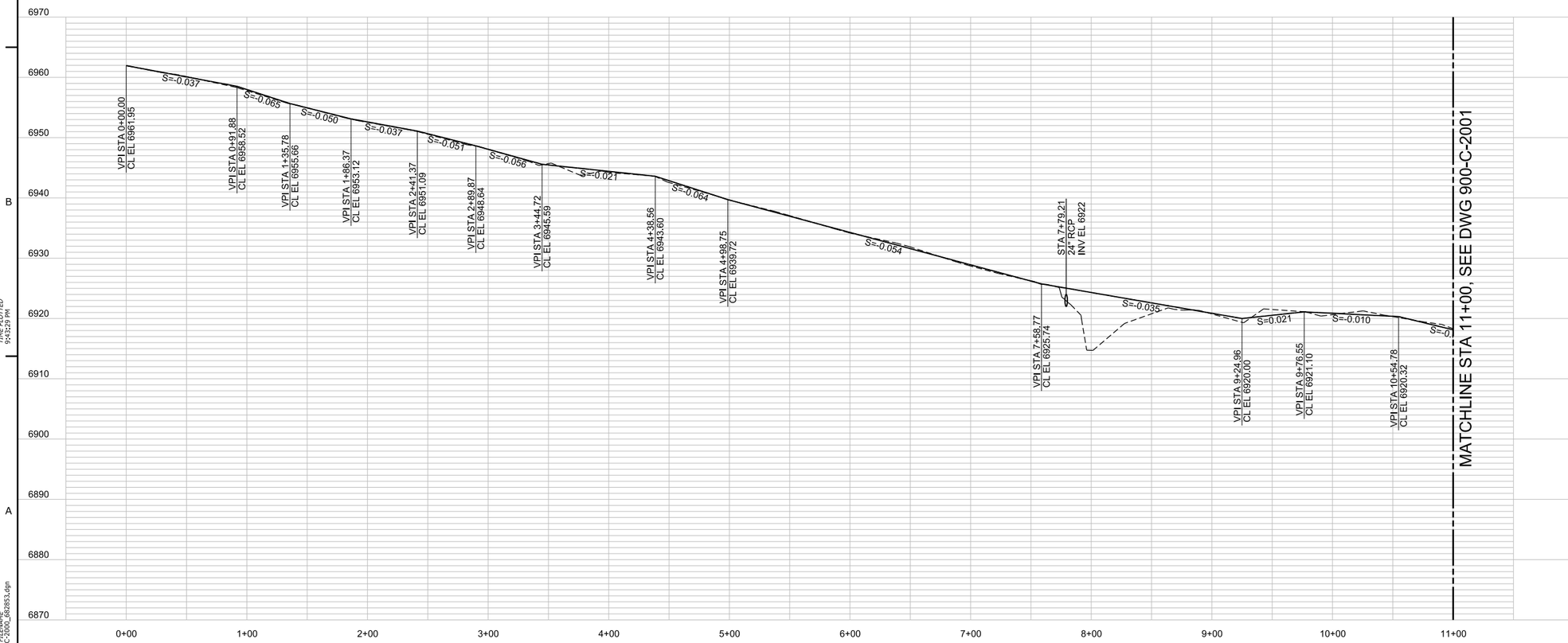

N

0 50 100 150
Scale In Feet

RECLAMATION
Managing Water in the West

ch2m

VERIFY SCALE
BAR IS ONE INCH ON ORIGINAL DRAWING.
0 1"

ALWAYS THINK SAFETY

U.S. DEPARTMENT OF THE INTERIOR
BUREAU OF RECLAMATION
NAVAJO-GALLUP WATER SUPPLY PROJECT
NEW MEXICO

CUTTER LATERAL - REACH 21

WATER TREATMENT PLANT

NO.	DATE	REVISION	BY	APVD
0	02/13/2019	ISSUED FOR CONSTRUCTION	MK	JP

J HONEA
DESIGNED
E ARMIJO
DRAWN
A FRIEDT
CHECKED
J HONEA
TECH. APPR.
J PETERSON
APPROVED
ADMIN APPROVAL -

FARMINGTON, NM FEBRUARY 2019

TANK 3 SUPPORT FACILITY

ACCESS ROAD
PLAN AND PROFILE - 1

900-C-2000

SHEET 385 OF 405

DATE PLOTTED 1/29/2019
TIME PLOTTED 9:43:29 PM

CAD SYSTEM
CAD FILENAME 900-C-2000_682853.dgn

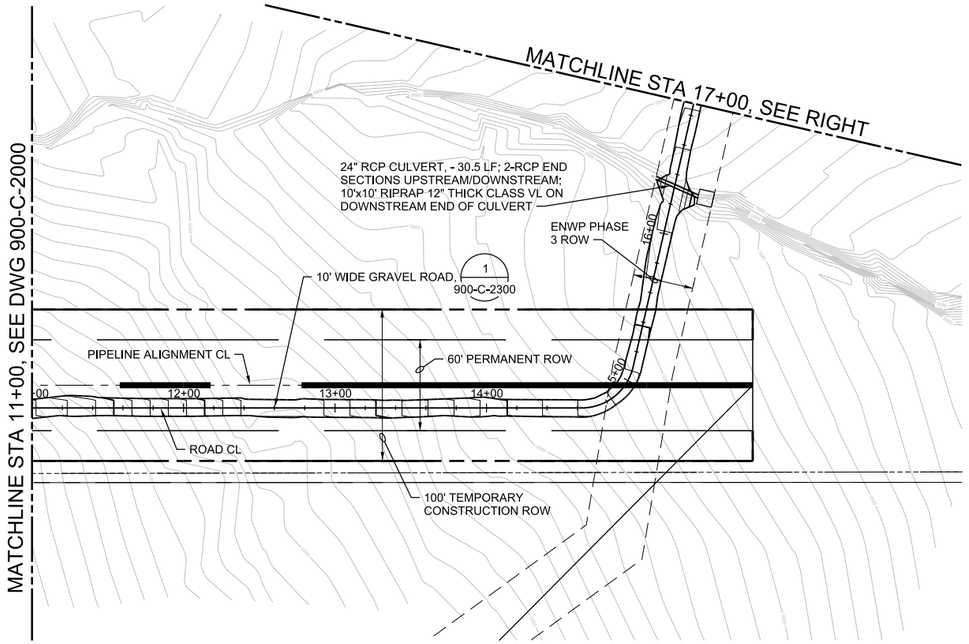

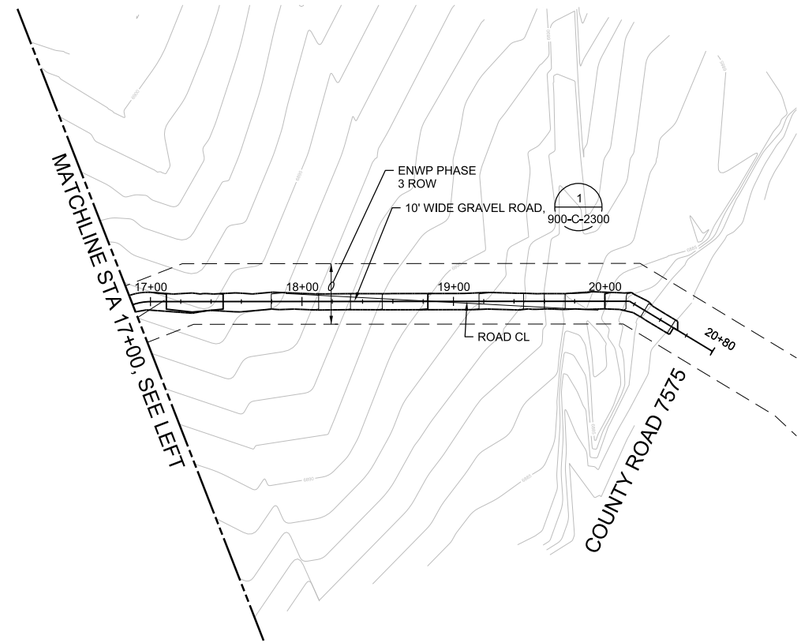

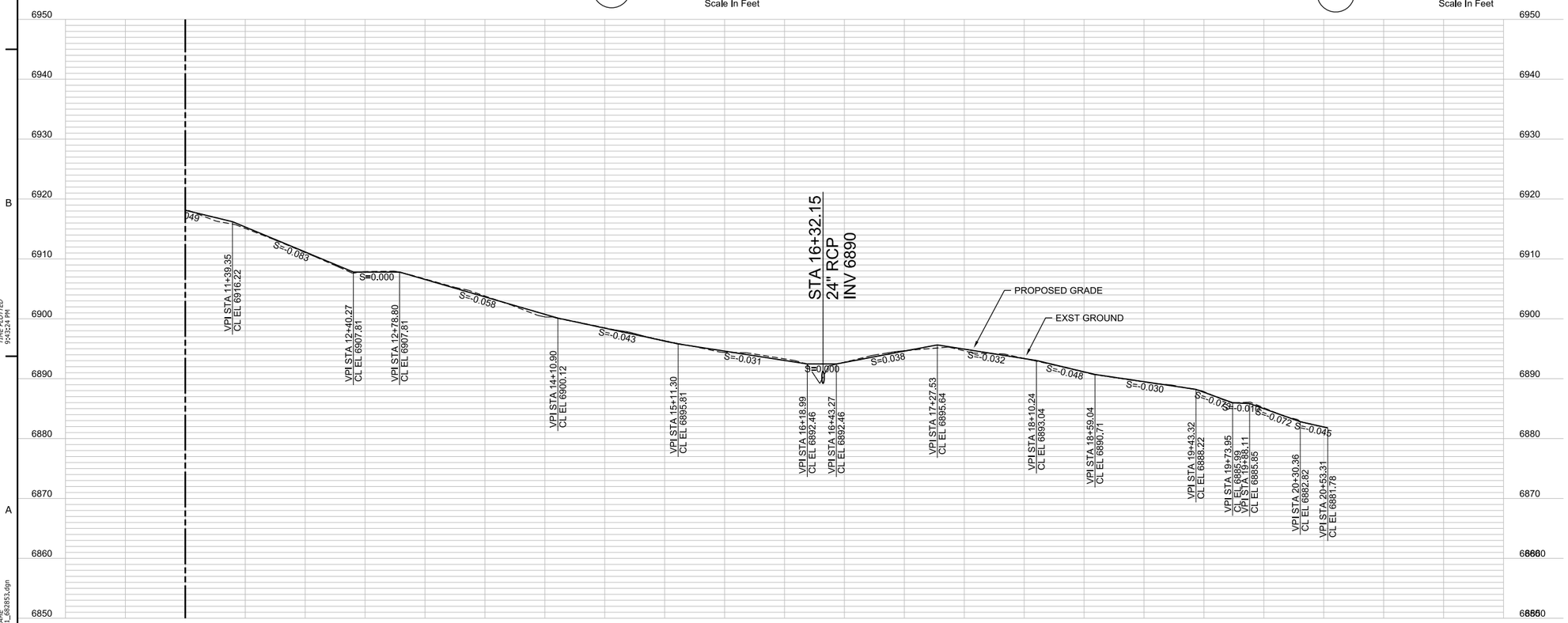

RECLAMATION
Managing Water in the West

ch2m

VERIFY SCALE
BAR IS ONE INCH ON ORIGINAL DRAWING.
0 1"

ALWAYS THINK SAFETY

U.S. DEPARTMENT OF THE INTERIOR
BUREAU OF RECLAMATION
NAVAJO-GALLUP WATER SUPPLY PROJECT
NEW MEXICO

CUTTER LATERAL - REACH 21

WATER TREATMENT PLANT

NO.	DATE	REVISION	BY	APVD
0	02/13/2019	ISSUED FOR CONSTRUCTION	MK	JP

J HONEA
DESIGNED
E ARMIJO
DRAWN
A FRIEDT
CHECKED
J HONEA
TECH. APPR.
J PETERSON
APPROVED
ADMIN APPROVAL -

FARMINGTON, NM FEBRUARY 2019

TANK 3 SUPPORT FACILITY

ACCESS ROAD
PLAN AND PROFILE - 2

900-C-2001

SHEET 386 OF 405

DATE PLOTTED 1/29/2019
TIME PLOTTED 9:43:24 PM
CAD SYSTEM
CAD FILENAME 900-C-2001_682853.dgn

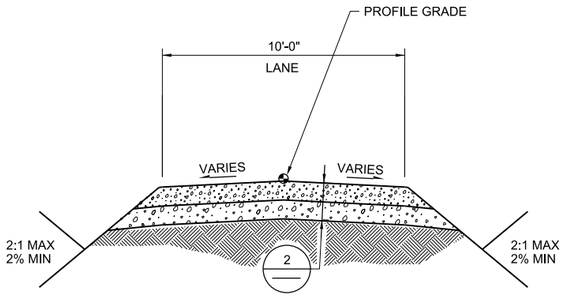

1 ONE WAY GRAVEL SITE ROAD
NTS
TANK 3 ACCESS ROAD

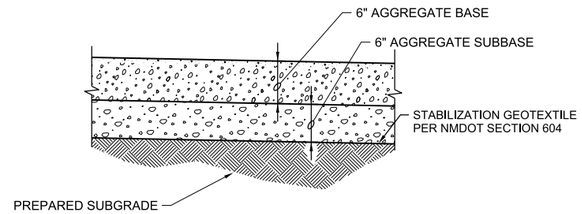

2 LIGHT DUTY GRAVEL SECTION
NTS

RECLAMATION
Managing Water in the West

ch2m

VERIFY SCALE
BAR IS ONE INCH ON ORIGINAL DRAWING.
0 1"

ALWAYS THINK SAFETY

U.S. DEPARTMENT OF THE INTERIOR
BUREAU OF RECLAMATION
NAVAJO-GALLUP WATER SUPPLY PROJECT
NEW MEXICO

CUTTER LATERAL - REACH 21

WATER TREATMENT PLANT

NO.	DATE	REVISION	BY	APV'D
0	02/13/2019	ISSUED FOR CONSTRUCTION	MK	JP

J HONEA
DESIGNED
E ARMIJO
DRAWN
A FRIEDT
CHECKED
J HONEA
TECH. APPR.
J PETERSON
APPROVED
ADMIN APPROVAL -

FARMINGTON, NM FEBRUARY 2019

TANK 3 SUPPORT FACILITY

DETAILS

900-C-2300

SHEET 387 OF 405

DATE PLOTTED 1/29/2019
TIME PLOTTED 9:44:10 PM

CAD SYSTEM
CAD FILENAME 900-C-2300_882853.dgn

SAN JUAN COUNTY, NEW MEXICO
SEC-18, T-25-N, R-9-W
NAVAJO TRIBAL TRUST

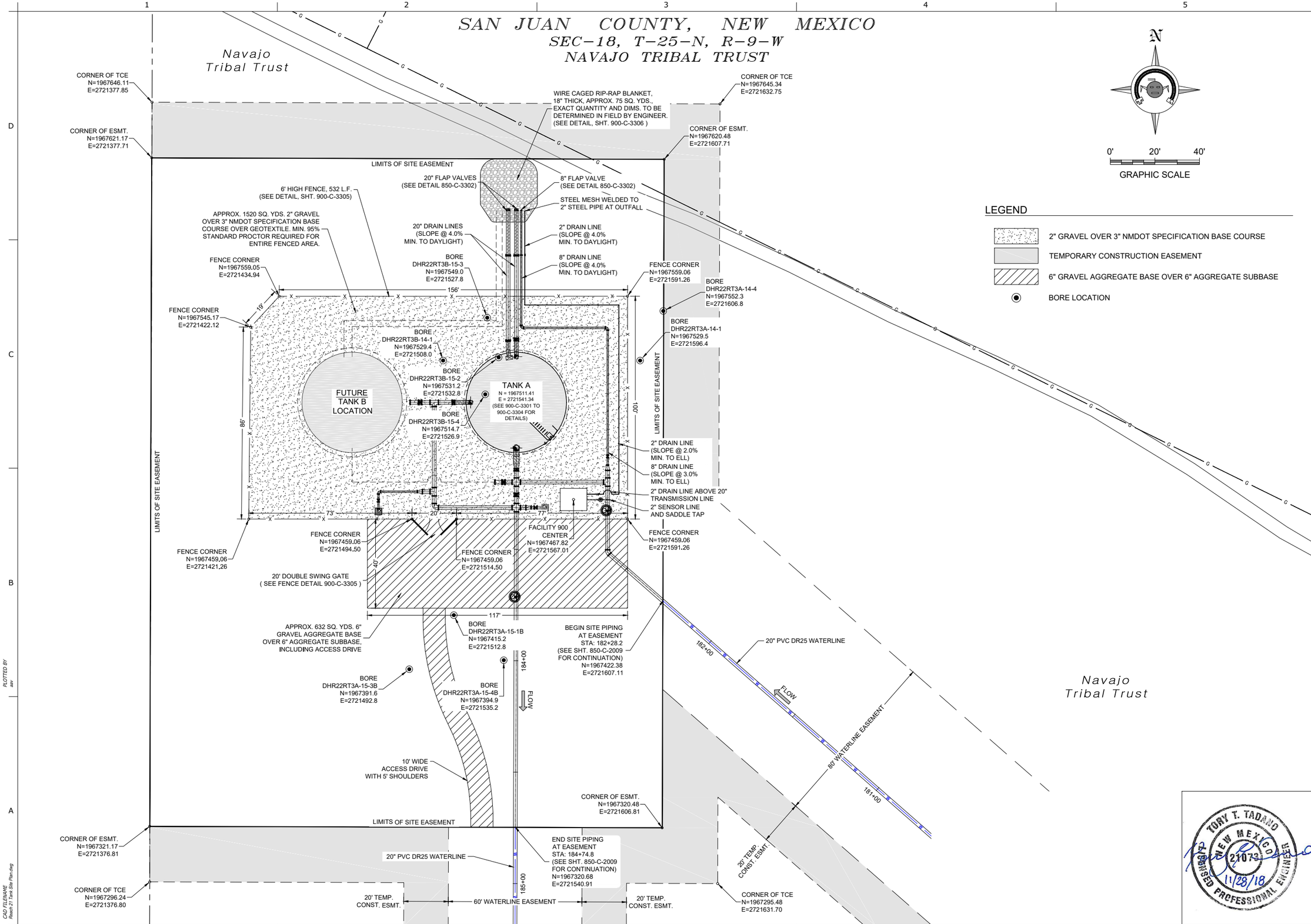

RECLAMATION
Managing Water in the West

SMA
Engineering • Environmental Surveying

ALWAYS THINK SAFETY

U.S. DEPARTMENT OF THE INTERIOR
BUREAU OF RECLAMATION
NAVAJO-GALLUP WATER SUPPLY PROJECT
NEW MEXICO

CUTTER LATERAL - REACH 21

WATER PIPELINE

NO.	DATE	REVISION	BY	APV'D
0	12/10/2018	ISSUED FOR CONSTRUCTION	TT	JG

T Tadano
DESIGNED
M Howard / A Vogenthaler
DRAWN
J Garcia
CHECKED
TECH. APPR.
APPROVED
ADMIN APPROVAL - TITLE

FARMINGTON, NM 2018-11-28

REACH 21 PIPELINE

REACH 21 TANK SITE
NO. 3 SITE PLAN

900-C-3000

SHEET 388 OF 405

TORY T. TADANO
NEW MEXICO
21073
LICENSED PROFESSIONAL ENGINEER
11/28/18

DATE AND TIME PLOTTED 11/28/18
PLOTTED BY aav
CAD SYSTEM AUTOCAD
CAD FILENAME Reach 21 Tank Site Plan.dwg

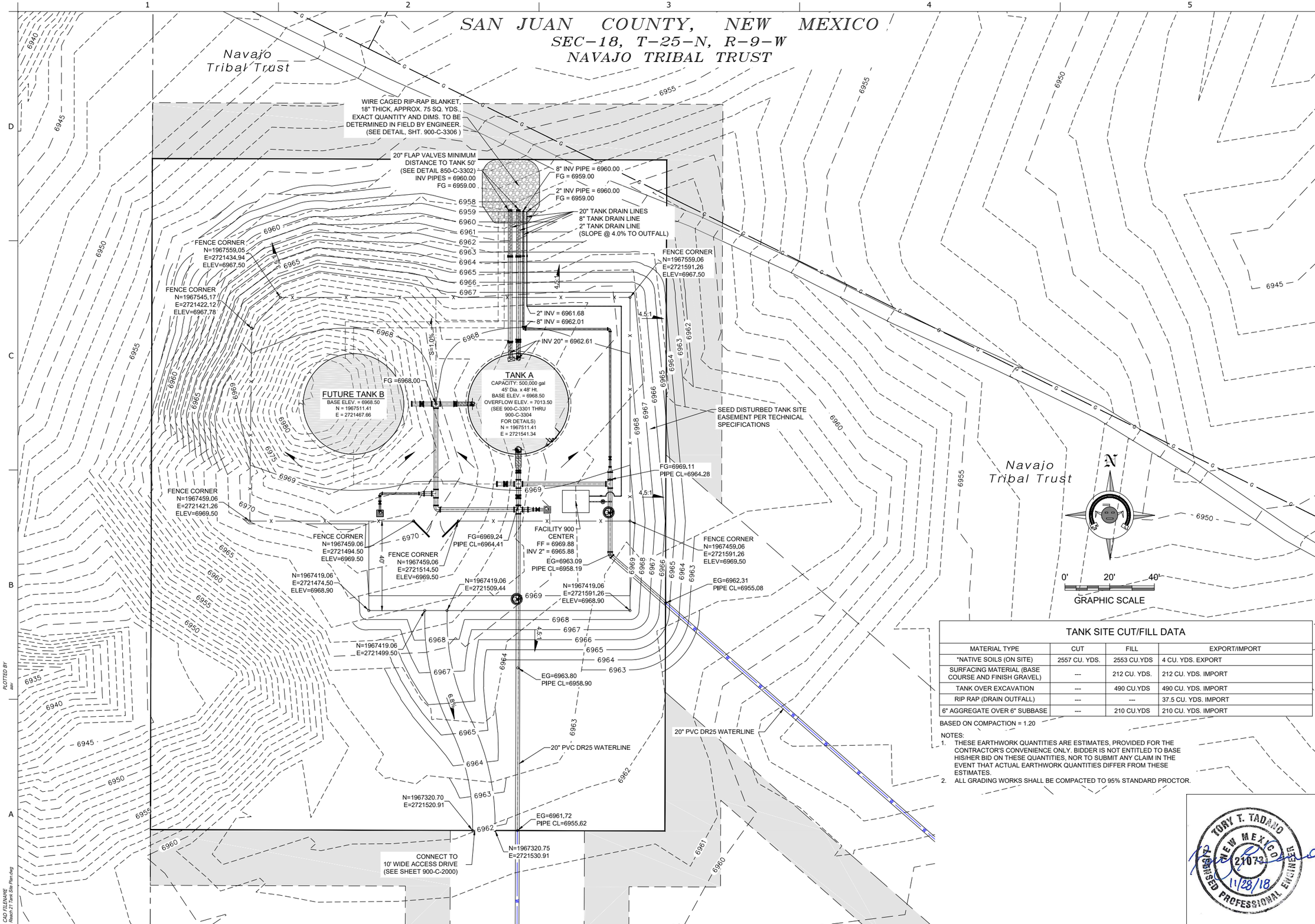

TANK SITE CUT/FILL DATA

MATERIAL TYPE	CUT	FILL	EXPORT/IMPORT
*NATIVE SOILS (ON SITE)	2557 CU. YDS.	2553 CU.YDS	4 CU. YDS. EXPORT
SURFACING MATERIAL (BASE COURSE AND FINISH GRAVEL)	---	212 CU. YDS.	212 CU. YDS. IMPORT
TANK OVER EXCAVATION	---	490 CU.YDS	490 CU. YDS. IMPORT
RIP RAP (DRAIN OUTFALL)	---	---	37.5 CU. YDS. IMPORT
6" AGGREGATE OVER 6" SUBBASE	---	210 CU.YDS	210 CU. YDS. IMPORT

BASED ON COMPACTION = 1.20

NOTES:
1. THESE EARTHWORK QUANTITIES ARE ESTIMATES, PROVIDED FOR THE CONTRACTOR'S CONVENIENCE ONLY. BIDDER IS NOT ENTITLED TO BASE HIS/HER BID ON THESE QUANTITIES, NOR TO SUBMIT ANY CLAIM IN THE EVENT THAT ACTUAL EARTHWORK QUANTITIES DIFFER FROM THESE ESTIMATES.
2. ALL GRADING WORKS SHALL BE COMPACTED TO 95% STANDARD PROCTOR.

TORY T. TADANO NEW MEXICO 21073 LICENSED PROFESSIONAL ENGINEER 11/28/18

RECLAMATION Managing Water in the West

SMA Engineering • Environmental Surveying

ALWAYS THINK SAFETY

U.S. DEPARTMENT OF THE INTERIOR
BUREAU OF RECLAMATION
NAVAJO-GALLUP WATER SUPPLY PROJECT
NEW MEXICO

CUTTER LATERAL - REACH 21

WATER PIPELINE

NO.	DATE	REVISION	BY	APV'D
0	12/10/2018	ISSUED FOR CONSTRUCTION	TT	JG

T Tadano — DESIGNED
M Howard / A Vogenthaler — DRAWN
J Garcia — CHECKED
TECH. APPR.
APPROVED — ADMIN APPROVAL — TITLE

FARMINGTON, NM 2018-11-28

REACH 21 PIPELINE

REACH 21 TANK
SITE NO. 3
GRADING PLAN

900-C-3001

SHEET 389 OF 405

DATE AND TIME PLOTTED 11/28/18
PLOTTED BY aav
CAD SYSTEM AUTOCAD
CAD FILENAME Reach 21 Tank Site Plan.dwg

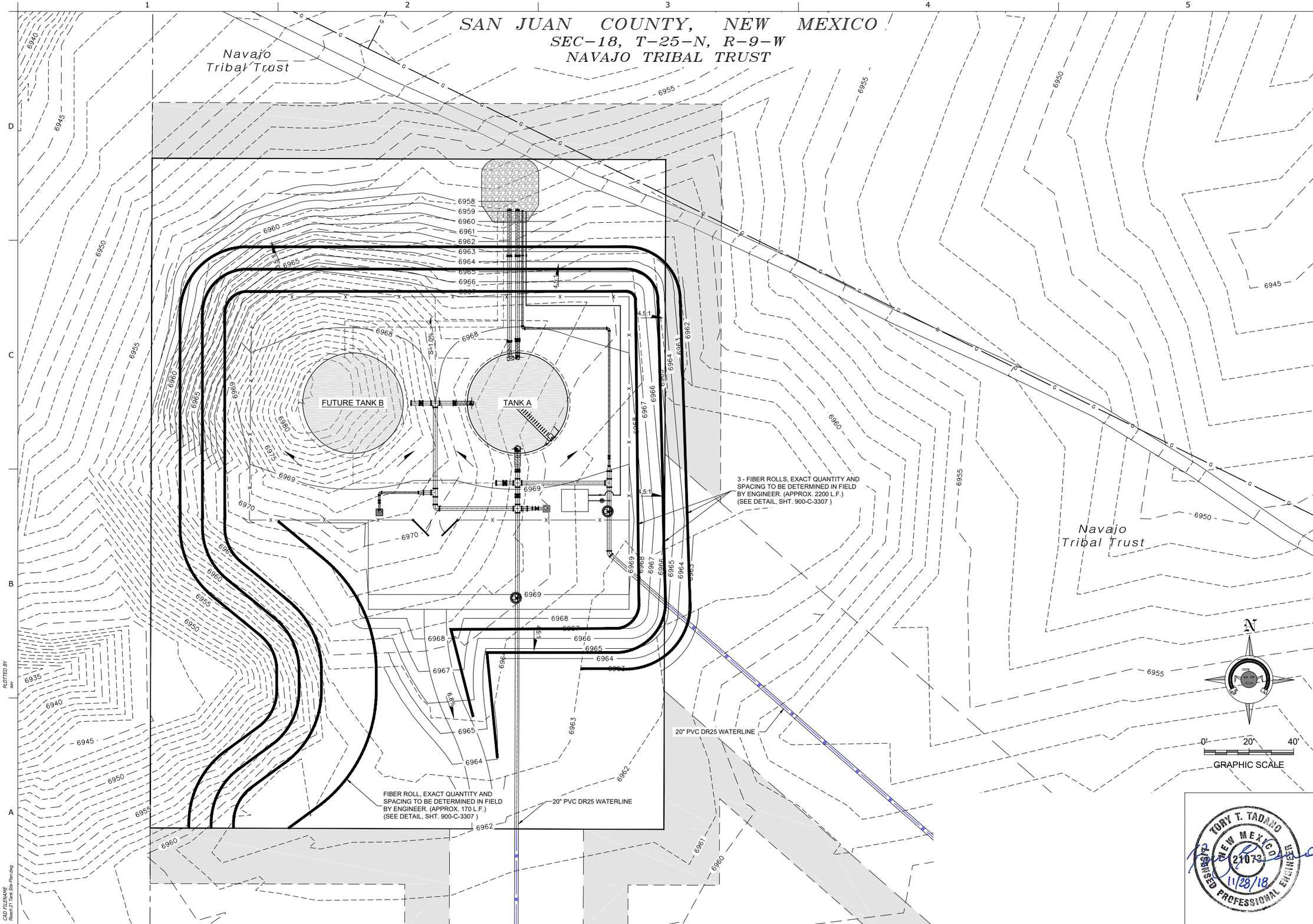

RECLAMATION
Managing Water in the West

SMA
Engineering • Environmental Surveying

ALWAYS THINK SAFETY

U.S. DEPARTMENT OF THE INTERIOR
BUREAU OF RECLAMATION
NAVAJO-GALLUP WATER SUPPLY PROJECT
NEW MEXICO

CUTTER LATERAL - REACH 21

WATER PIPELINE

NO.	DATE	REVISION	BY	APV'D
0	12/10/2018	ISSUED FOR CONSTRUCTION	TT	JG

T Tadano
DESIGNED
M Howard / A Vogenthaler
DRAWN
J Garcia
CHECKED
TECH. APPR.
APPROVED
ADMIN APPROVAL - TITLE

FARMINGTON, NM 2018-11-28

TORY T. TADANO
NEW MEXICO
21073
LICENSED PROFESSIONAL ENGINEER
11/28/18

REACH 21 PIPELINE

REACH 21 TANK SITE
NO. 3 STORMWATER
BMP PLAN

900-C-3002

SHEET 390 OF 405

DATE AND TIME PLOTTED 11/28/18
PLOTTED BY aav

CAD SYSTEM AUTOCAD
CAD FILENAME Reach 21 Tank Site Plan.dwg

KEYED NOTES - REACH 21 TANK SITE

Item No.	Description
1	3" VACUUM BREAKER W/ 2" AIR RELEASE VALVE (SEE DETAIL 850-C-3309)
2	20" PVC DR25 PIPE
3	20" MJ x MJ TEE, D.I. 350 psi
4	20" x 2" SS 304 TAPPING SADDLE, 250 psi
5	20" FLAP VALVE (SEE DETAIL 850-C-3302)
6	20" FL x FL BUTTERFLY VALVE, 150 psi (SEE DETAIL 850-C-3308)
7	20" x 8" MJ x MJ CONCENTRIC REDUCER, D.I. 350 psi
8	20" MJ x MJ 45° ELL, D.I. 350 psi
9	20" MJ x MJ 90° ELL, D.I. 350 psi
10	20" MJ END CAP, D.I. 350 psi
11	20" STEEL PIPE, STANDARD WALL
12	20" FLANGE ADAPTOR, 165 psi
13	8" PVC DR18 PIPE
14	8" MJ x MJ GATE VALVE, 350 psi (SEE DETAIL 850-C-3308)
15	8" MJ x MJ 90° ELL, D.I. 350 psi
16	8" FLAP VALVE (SEE DETAIL 850-C-3302)
17	32" STEEL PIPE, STANDARD WALL
18	32" x 20" STEEL REDUCER, STANDARD WALL
19	2" PVC PIPE, SCHEDULE 80
20	2" STEEL PIPE, STANDARD WALL
21	2" RESTRAINT COUPLING, FBE - COATED, SS 304 BOLTS, SMITH BLAIR MAXI-GRIP EZ-W, 200 psi, OAE
22	STEEL MESH WELDED TO 2" STEEL PIPE AT OUTFALL
23	2" CURB STOP, 300 psi
24	8" STEEL PIPE, STANDARD WALL
25	8" FLANGE ADAPTOR, 165 psi
26	20" MJ x MJ CROSS, D.I. 350 psi
27	20" x 12" MJ x MJ CONCENTRIC REDUCER, D.I. 350 psi
28	12" PVC DR25 PIPE
29	12" MJ x MJ GATE VALVE, 350 psi (SEE DETAIL 850-C-3308)

NOTES:

1. CONTRACTOR SHALL FIELD SURVEY ELEVATION OF OVERFLOW WEIR OF TANK A AND ENSURE OVERFLOW WEIR ELEVATION MATCHES ENWP PHASE 3 DZ REGULATING (SE) TANK OVERFLOW ELEVATION (WITHIN A TOLERANCE OF ±1/2" INCH).
2. PROVIDE TANK SUB-FOUNDATIONS, OVER-EXCAVATION, AND SITE GRADING IN ACCORDANCE WITH GEOTECHNICAL REPORT AND 900-C-3301.
3. PROVIDE TANK FOUNDATION IN ACCORDANCE WITH GEOTECHNICAL REPORT AND TANK MANUFACTURER'S PE-SEALED FOUNDATION DESIGN.
4. NO HIGH SPOTS PERMITTED ON SITE PIPING. ALL SITE PIPING (INCLUDING SENSOR LINES) SHALL SLOPE UP TOWARDS TANKS OR ARVS (MIN. 1%).
5. ALL MATERIALS, FITTINGS AND APPURTENANCES SHALL BE RATED TO AT LEAST 165 psi, UNLESS OTHERWISE NOTED.
6. ALL PIPE AND FITTINGS UNDERNEATH AND WITHIN 5' OF TANK FOUNDATIONS SHALL BE STEEL, AND SHALL BE SHOP WELDED, SHOP COATED, X-RAY TESTED AND PRESSURE TESTED PRIOR TO PLACING FOUNDATIONS. SHOP COATINGS SHALL BE APPLIED AFTER WELDING.
7. ALL VALVES AND STEEL-TO-PVC COUPLINGS AT TANKS SHALL BE LOCATED AT LEAST 5' FROM EDGES OF FOUNDATIONS.
8. ALL BURIED NON-STAINLESS STEEL PIPE AND FITTINGS SHALL BE COLD-APPLIED TAPE-WRAPPED, PER SPECIFICATIONS.
9. GLASS-FUSED STEEL TANKS: ALL 32-INCH AND 20-INCH STEEL PIPE AND FITTINGS SHALL BE FBE-COATED, INTERIOR AND EXTERIOR.
10. ALL BURIED DUCTILE IRON FITTINGS SHALL BE MJ.
11. ALL PRESSURE BEARING PIPES WITHIN SITE SHALL BE FULLY RESTRAINED. REFER TO DETAIL, SHEET 850-C-3303.
12. FIELD LOCATE CONDUITS PER REVIEW WITH ELECTRICIAN.
13. TANK SITE NON-STAINLESS METALLIC COMPONENTS REQUIRE CATHODIC PROTECTION.

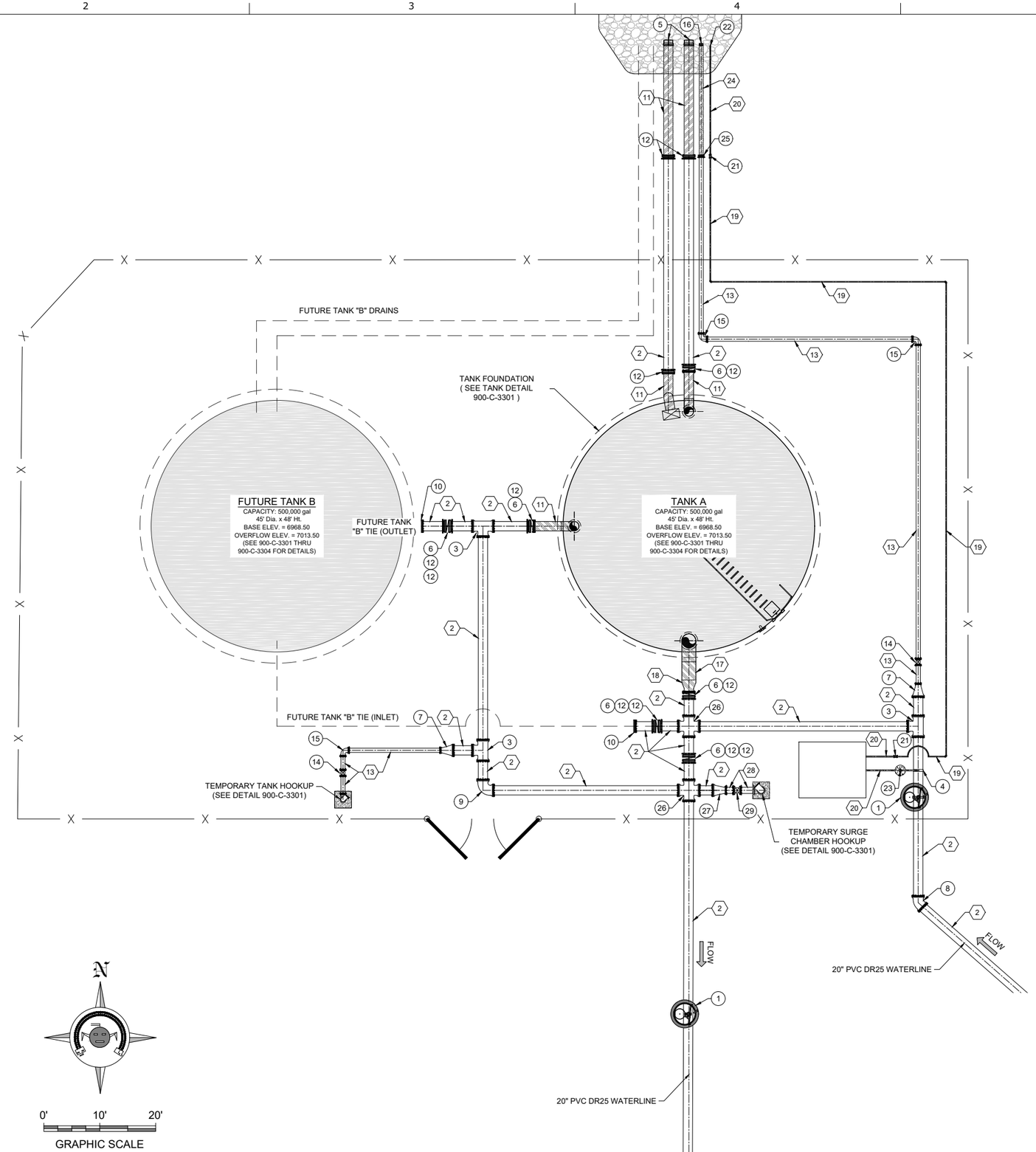

RECLAMATION
Managing Water in the West

SMA
Engineering • Environmental Surveying

ALWAYS THINK SAFETY

U.S. DEPARTMENT OF THE INTERIOR
BUREAU OF RECLAMATION
NAVAJO-GALLUP WATER SUPPLY PROJECT
NEW MEXICO

CUTTER LATERAL - REACH 21

WATER PIPELINE

NO.	DATE	REVISION	BY	APV'D
0	12/10/2018	ISSUED FOR CONSTRUCTION	TT	JG

T Tadano
DESIGNED
M Howard / A Vogenthaler
DRAWN
J Garcia
CHECKED
TECH. APPR.
APPROVED
ADMIN APPROVAL - TITLE

FARMINGTON, NM 2018-11-28

TORY T. TADANO
NEW MEXICO
21073
LICENSED PROFESSIONAL ENGINEER
11/28/18

REACH 21 PIPELINE

REACH 21 TANK
SITE NO. 3
PIPING PLAN

900-C-3003

SHEET 391 OF 405

DATE AND TIME PLOTTED 11/28/18
PLOTTED BY aav

CAD SYSTEM AUTOCAD
CAD FILENAME Reach 21 Tank Site Plan.dwg

TANK SITE NUMBER 3 - VALVE NUMBERING						
Valve No.	Valve Size	Valve Type	Pipe Type	Description	Warning Placard (Requires lockable valve box lid inside meter can) (See Sheet 850-C-3308)	Normal Operation
1	8"	GV	PVC	MAIN LINE FLUSH VALVE	NO	CLOSED
2	20"	BFV	STEEL / PVC	TANK A FLOOR DRAIN	NO	CLOSED
3	20"	BFV	PVC	TANK B OUTLET	NO	CLOSED
4	20"	BFV	STEEL / PVC	TANK A OUTLET	NO	OPEN
5	20"	BFV	STEEL / PVC	TANK A INLET	DO NOT CLOSE, PLACARD "C-1"	OPEN
6	20"	BFV	PVC	TANK B INLET	DO NOT CLOSE, PLACARD "C-1"	CLOSED
7	20"	BFV	PVC	TANK A AND B BYPASS	DO NOT OPEN, PLACARD "C-2"	CLOSED
8	12"	GV	PVC	TEMPORARY SURGE CHAMBER HOOK UP	NO	CLOSED
9	8"	GV	PVC	TEMPORARY TANK HOOK UP	NO	CLOSED
10	2"	CV	PVC	SENSOR LINE INLET	NO	OPEN

NOTES:
1. REFERENCE SHEET 850-C-3308 FOR SITE VALVE IDENTIFICATION AND WARNING PLACARD DETAILS.

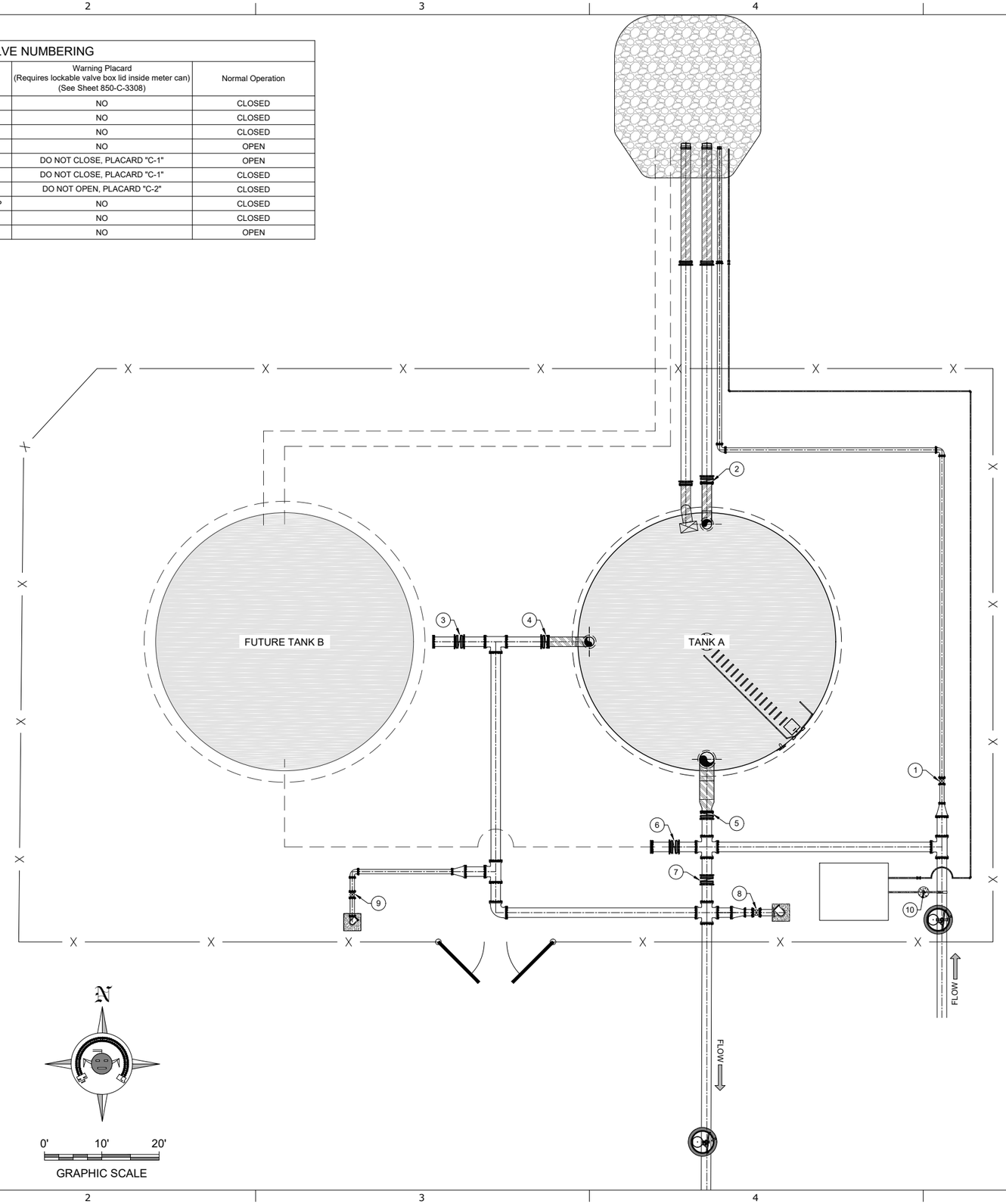

RECLAMATION
Managing Water in the West

SMA
Engineering • Environmental Surveying

ALWAYS THINK SAFETY

U.S. DEPARTMENT OF THE INTERIOR
BUREAU OF RECLAMATION
NAVAJO-GALLUP WATER SUPPLY PROJECT
NEW MEXICO

CUTTER LATERAL - REACH 21

WATER PIPELINE

NO.	DATE	REVISION	BY	APV'D
0	12/10/2018	ISSUED FOR CONSTRUCTION	TT	JG

T Tadano
DESIGNED
M Howard / A Vogenthaler
DRAWN
J Garcia
CHECKED
TECH. APPR.
APPROVED
NAME/INITIAL - TITLE

FARMINGTON, NM 2018-11-28

TORY T. TADANO
NEW MEXICO
21073
LICENSED PROFESSIONAL ENGINEER
11/28/18

REACH 21 PIPELINE

REACH 21 TANK
SITE NO. 3 SITE
VALVE NUMBERS

900-C-3004

SHEET 392 OF 405

DATE AND TIME PLOTTED
11/28/18
PLOTTED BY
aav

CAD SYSTEM
AUTOCAD
CAD FILENAME
Reach 21 Tank Site Plan.dwg

NOTES:

1. FOUNDATION AND TANK STRUCTURAL DESIGN DRAWINGS AND CALCULATIONS (SEALED BY NEW MEXICO-LICENSED PROFESSIONAL ENGINEER) TO BE PROVIDED BY TANK MANUFACTURER. FOUNDATION SHALL BE EITHER CONCRETE RING OR CONCRETE MAT, BASED ON LICENSED P.E.'s DESIGN AND THE RECOMMENDATIONS OF THE GEOTECHNICAL REPORT BY NV5 #444317-2360000.02 DATED NOVENMBER 20, 2018.
2. IF RINGWALL FOUNDATION IS USED, TANK SHALL BEAR ON A MINIMUM OF 3 FEET OF ENGINEERED FILL. ENGINEERED FILL SHALL EXTEND 3 FEET BEYOND RINGWALL AND RINGWALL FOOTING SHALL BEAR ON A MINIMUM OF 18 INCHES OF ENGINEERED FILL MEASURED AT BOTTOM OF OVER-EXCAVATION. INCREASE DEPTH OF OVER-EXCAVATION, IF NECESSARY, TO ENSURE ENGINEERED FILL BEARS UNIFORMLY ON CUT; DO NOT ALLOW TRANSITION FROM CUT TO FILL TO PASS UNDERNEATH OR WITHIN 5 HORIZONTAL FEET OF TANK. REFER TO GEOTECHNICAL REPORT BY NV5 #444317-2360000.02 DATED NOVENMBER 20, 2018 FOR SUBSURFACE INFORMATION, OVER EXCAVATION REQUIREMENTS, SUBGRADE PREPARATION, AND STRUCTURAL FILL & COMPACTION. ENGINEERED FILL SHALL BE COMPACTED TO 95% MIN. MODIFIED PROCTOR.
3. IF CONCRETE MAT FOUNDATION IS USED, TANK SHALL BEAR ON A MINIMUM OF 18 INCHES OF ENGINEERED FILL. ENGINEERED FILL SHALL EXTEND 3 FEET BEYOND MAT, MEASURED AT BOTTOM OF OVER-EXCAVATION. INCREASE DEPTH OF OVER-EXCAVATION, IF NECESSARY, TO ENSURE ENGINEERED FILL BEARS UNIFORMLY ON CUT; DO NOT ALLOW TRANSITION FROM CUT TO FILL TO PASS UNDERNEATH OR WITHIN 5 HORIZONTAL FEET OF TANK. REFER TO GEOTECHNICAL REPORT BY NV5 #444317-2360000.02 DATED NOVENMBER 20, 2018 FOR SUBSURFACE INFORMATION, OVER EXCAVATION REQUIREMENTS, SUBGRADE PREPARATION, AND STRUCTURAL FILL & COMPACTION. ENGINEERED FILL SHALL BE COMPACTED TO 95% MIN. MODIFIED PROCTOR.
4. STATED TANK VOLUMES ARE NOMINAL. ACTUAL TANK VOLUMES SHALL BE WITHIN 2% OF THE STATED NOMINAL VALUE.
5. TANK COLOR TO BE JUNIPER GREEN.
6. TANK APPURTENANCES SHOWN IN ELEVATION VIEW HAVE BEEN ROTATED INTO VIEW FOR DEPICTION PURPOSES.
7. FOR GLASSED FUSED TO BOLTED STEEL TANKS, ALL STEEL PIPE AND FITTINGS SHALL BE FBE COATED, INTERIOR AND EXTERIOR.
8. ALL STEEL PIPE AND FITTINGS UNDERNEATH AND WITHIN 5' OF TANKS OR BUILDINGS SHALL BE SHOP WELDED AND COATED, X-RAY TESTED AND PRESSURE TESTED PRIOR TO POURING FOUNDATIONS.
9. ALL STEEL PIPE AND FITTINGS SHALL BE STANDARD WALL UNLESS OTHERWISE NOTED.
10. SANDBLASTING WASTE SHALL BE DISPOSED OF OFF-SITE AT AN APPROVED SOLID WASTE FACILITY AT THE CONTRACTOR'S EXPENSE.
11. ALL BASE AND OVERFLOW ELEVATIONS PROVIDED IN THESE DRAWINGS ARE APPROXIMATE. CONTRACTOR SHALL FIELD SURVEY ELEVATION OF ENWP PHASE 3 DZ REGULATING (SE) TANK OVERFLOW WEIR AND ENSURE BOTH TANK'S WEIR ELEVATIONS MATCH WITHIN A TOLERANCE OF ±1/2 INCHES.
12. ALL STEEL PIPE FLANGES SHALL BE ANSI CLASS 150.
13. EXACT ORIENTATION OF ALL TANK FEATURES AND PIPE PENETRATIONS TO BE DETERMINED IN THE FIELD BY THE ENGINEER. TANK MANUFACTURER SHALL CONFIRM ALL LOCATIONS W/ ENGINEER PRIOR TO FABRICATION. SOME FEATURES MAY BE ROTATED IN ELEVATION VIEW FOR CLARITY.
14. FOUNDATION AND FLOOR SLOPE UPWARDS 1% TOWARD CENTER TO PREVENT "OILCANNING".
15. PASSIVE CATHODIC PROTECTION REQUIRED.

KEYED NOTES 8" TEMPORARY TANK HOOK-UP

Item No.	Description
1	8" MJ x MJ GATE VALVE, 250 psi
2	8" PVC PIPE, DR18
3	8" STEEL PIPE, STANDARD WALL
4	8" MJ x MJ 90° ELL, D.I., 350 psi
5	8" STEEL FLANGE, WELDED
6	8" BLIND FLANGE WITH GASKET
7	8" 90° ELL, STEEL, WELDED (ORIENTATION PER SITE PLANS)

NOTES:
1. ALL MATERIALS SHALL BE RATED TO AT LEAST 150 psi, UNLESS OTHERWISE NOTED.
2. ALL METALLIC PIPE, VALVES AND FITTINGS SHALL BE FBE-COATED, INTERIOR AND EXTERIOR. ALL METALLIC PIPE IN CONTACT WITH SOIL SHALL ALSO BE COLD APPLIED TAPE-COATED, PER SPECIFICATIONS.
3. FLANGES SHALL BE ANSI CLASS 150 (STEEL) OR ANSI CLASS 125 (IRON).
4. ALL STEEL PIPE AND FITTINGS SHALL BE STANDARD WALL.
5. VALVE BOX LID AND ALL ABOVE GROUND STEEL COMPONENTS SHALL BE COATED BLUE.

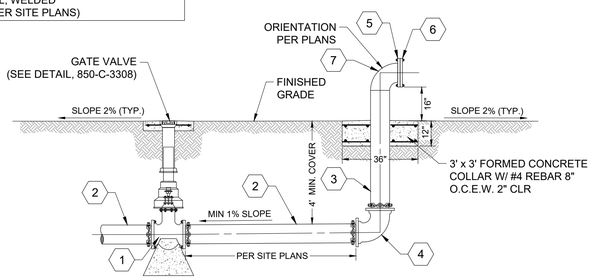

TEMPORARY TANK HOOK-UP DETAIL

NOT TO SCALE

KEYED NOTES 12" TEMPORARY SURGE CHAMBER HOOK-UP

Item No.	Description
1	12" MJ x MJ GATE VALVE, 250 psi
2	12" PVC PIPE, DR18
3	12" STEEL PIPE, STANDARD WALL
4	12" MJ x MJ 90° ELL, D.I., 350 psi
5	12" STEEL FLANGE, WELDED
6	12" BLIND FLANGE WITH GASKET
7	12" 90° ELL, STEEL, WELDED (ORIENTATION PER SITE PLANS)

NOTES:
1. ALL MATERIALS SHALL BE RATED TO AT LEAST 150 psi, UNLESS OTHERWISE NOTED.
2. ALL METALLIC PIPE, VALVES AND FITTINGS SHALL BE FBE-COATED, INTERIOR AND EXTERIOR. ALL METALLIC PIPE IN CONTACT WITH SOIL SHALL ALSO BE COLD APPLIED TAPE-COATED, PER SPECIFICATIONS.
3. FLANGES SHALL BE ANSI CLASS 150 (STEEL) OR ANSI CLASS 125 (IRON).
4. ALL STEEL PIPE AND FITTINGS SHALL BE STANDARD WALL.
5. VALVE BOX LID AND ALL ABOVE GROUND STEEL COMPONENTS SHALL BE COATED BLUE.

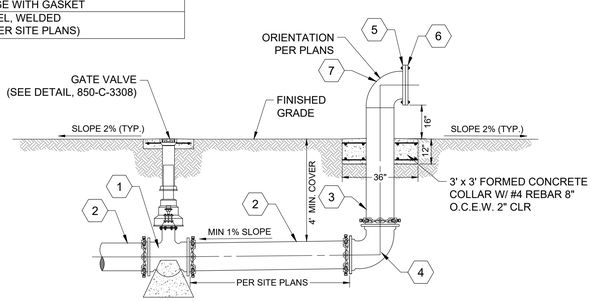

TEMPORARY SURGE CHAMBER HOOK-UP DETAIL

NOT TO SCALE

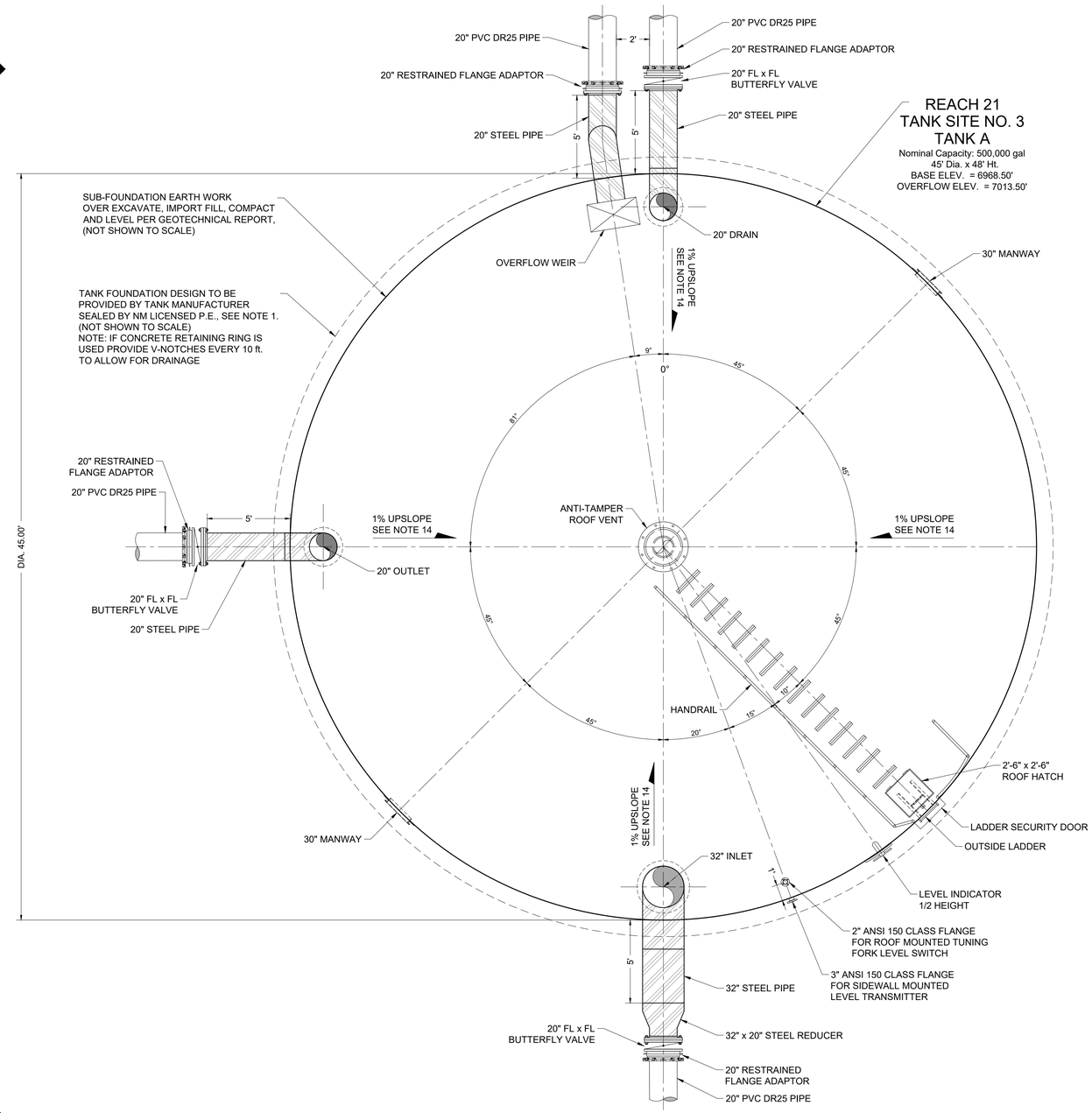

PLAN VIEW

TANK SITE NO. 3
TANK A DETAIL

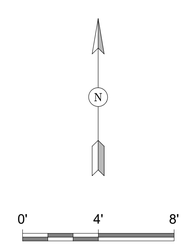

RECLAMATION
Managing Water in the West

SMA
Engineering • Environmental Surveying

ALWAYS THINK SAFETY

U.S. DEPARTMENT OF THE INTERIOR
BUREAU OF RECLAMATION
NAVAJO-GALLUP WATER SUPPLY PROJECT
NEW MEXICO

CUTTER LATERAL - REACH 21

WATER PIPELINE

NO.	DATE	REVISION	BY	APVD
0	12/10/2018	ISSUED FOR CONSTRUCTION	TT	JG

T Tadano
DESIGNED
M Howard / A Vogenthaler
DRAWN
J Garcia
CHECKED
TECH. APPR.
APPROVED
SIGNATURE REMOVAL - TITLE

FARMINGTON, NM 2019-02-04

TORY T. TADANO
NEW MEXICO
21878
LICENSED PROFESSIONAL ENGINEER
2/13/19

REACH 21 PIPELINE

TANK DETAILS
(1 of 2)

900-C-3301

SHEET 393 OF 405

DATE AND TIME PLOTTED 2/13/19
PLOTTED BY atrr
CAD SYSTEM AUTOCAD
CAD FILENAME Reach 21Tank Details.dwg

NOTES:

1. FOUNDATION AND TANK STRUCTURAL DESIGN DRAWINGS AND CALCULATIONS (SEALED BY NEW MEXICO-LICENSED PROFESSIONAL ENGINEER) TO BE PROVIDED BY TANK MANUFACTURER. FOUNDATION SHALL BE EITHER CONCRETE RING OR CONCRETE MAT, BASED ON LICENSED P.E.'s DESIGN AND THE RECOMMENDATIONS OF THE GEOTECHNICAL REPORT BY NV5 #444317-2360000.02 DATED NOVENMBER 20, 2018.
2. IF RINGWALL FOUNDATION IS USED, TANK SHALL BEAR ON A MINIMUM OF 3 FEET OF ENGINEERED FILL. ENGINEERED FILL SHALL EXTEND 3 FEET BEYOND RINGWALL AND RINGWALL FOOTING SHALL BEAR ON A MINIMUM OF 18 INCHES OF ENGINEERED FILL MEASURED AT BOTTOM OF OVER-EXCAVATION. INCREASE DEPTH OF OVER-EXCAVATION, IF NECESSARY, TO ENSURE ENGINEERED FILL BEARS UNIFORMLY ON CUT; DO NOT ALLOW TRANSITION FROM CUT TO FILL TO PASS UNDERNEATH OR WITHIN 5 HORIZONTAL FEET OF TANK. REFER TO GEOTECHNICAL REPORT BY NV5 #444317-2360000.02 DATED NOVENMBER 20, 2018 FOR SUBSURFACE INFORMATION, OVER EXCAVATION REQUIREMENTS, SUBGRADE PREPARATION, AND STRUCTURAL FILL & COMPACTION. ENGINEERED FILL SHALL BE COMPACTED TO 95% MIN. MODIFIED PROCTOR.
3. IF CONCRETE MAT FOUNDATION IS USED, TANK SHALL BEAR ON A MINIMUM OF 18 INCHES OF ENGINEERED FILL. ENGINEERED FILL SHALL EXTEND 3 FEET BEYOND MAT, MEASURED AT BOTTOM OF OVER-EXCAVATION. INCREASE DEPTH OF OVER-EXCAVATION, IF NECESSARY, TO ENSURE ENGINEERED FILL BEARS UNIFORMLY ON CUT; DO NOT ALLOW TRANSITION FROM CUT TO FILL TO PASS UNDERNEATH OR WITHIN 5 HORIZONTAL FEET OF TANK. REFER TO GEOTECHNICAL REPORT BY NV5 #444317-2360000.02 DATED NOVENMBER 20, 2018 FOR SUBSURFACE INFORMATION, OVER EXCAVATION REQUIREMENTS, SUBGRADE PREPARATION, AND STRUCTURAL FILL & COMPACTION. ENGINEERED FILL SHALL BE COMPACTED TO 95% MIN. MODIFIED PROCTOR.
4. STATED TANK VOLUMES ARE NOMINAL. ACTUAL TANK VOLUMES SHALL BE WITHIN 2% OF THE STATED NOMINAL VALUE.
5. TANK COLOR TO BE JUNIPER GREEN.
6. TANK APPURTENANCES SHOWN IN ELEVATION VIEW HAVE BEEN ROTATED INTO VIEW FOR DEPICTION PURPOSES.
7. FOR GLASSED FUSED TO BOLTED STEEL TANKS, ALL STEEL PIPE AND FITTINGS SHALL BE FBE COATED, INTERIOR AND EXTERIOR.
8. ALL STEEL PIPE AND FITTINGS UNDERNEATH AND WITHIN 5' OF TANKS OR BUILDINGS SHALL BE SHOP WELDED AND COATED, X-RAY TESTED AND PRESSURE TESTED PRIOR TO POURING FOUNDATIONS.
9. ALL STEEL PIPE AND FITTINGS SHALL BE STANDARD WALL UNLESS OTHERWISE NOTED.
10. SANDBLASTING WASTE SHALL BE DISPOSED OF OFF-SITE AT AN APPROVED SOLID WASTE FACILITY AT THE CONTRACTOR'S EXPENSE.
11. ALL BASE AND OVERFLOW ELEVATIONS PROVIDED IN THESE DRAWINGS ARE APPROXIMATE. CONTRACTOR SHALL FIELD SURVEY ELEVATION OF ENWP PHASE 3 DZ REGULATING (SE) TANK OVERFLOW WEIR AND ENSURE BOTH TANK'S WEIR ELEVATIONS MATCH WITHIN A TOLERANCE OF ±1/2 INCHES.
12. ALL STEEL PIPE FLANGES SHALL BE ANSI CLASS 150.
13. EXACT ORIENTATION OF ALL TANK FEATURES AND PIPE PENETRATIONS TO BE DETERMINED IN THE FIELD BY THE ENGINEER. TANK MANUFACTURER SHALL CONFIRM ALL LOCATIONS W/ ENGINEER PRIOR TO FABRICATION. SOME FEATURES MAY BE ROTATED IN ELEVATION VIEW FOR CLARITY.
14. FOUNDATION AND FLOOR SLOPE UPWARDS 1% TOWARD CENTER TO PREVENT "OILCANNING".
15. PASSIVE CATHODIC PROTECTION REQUIRED.

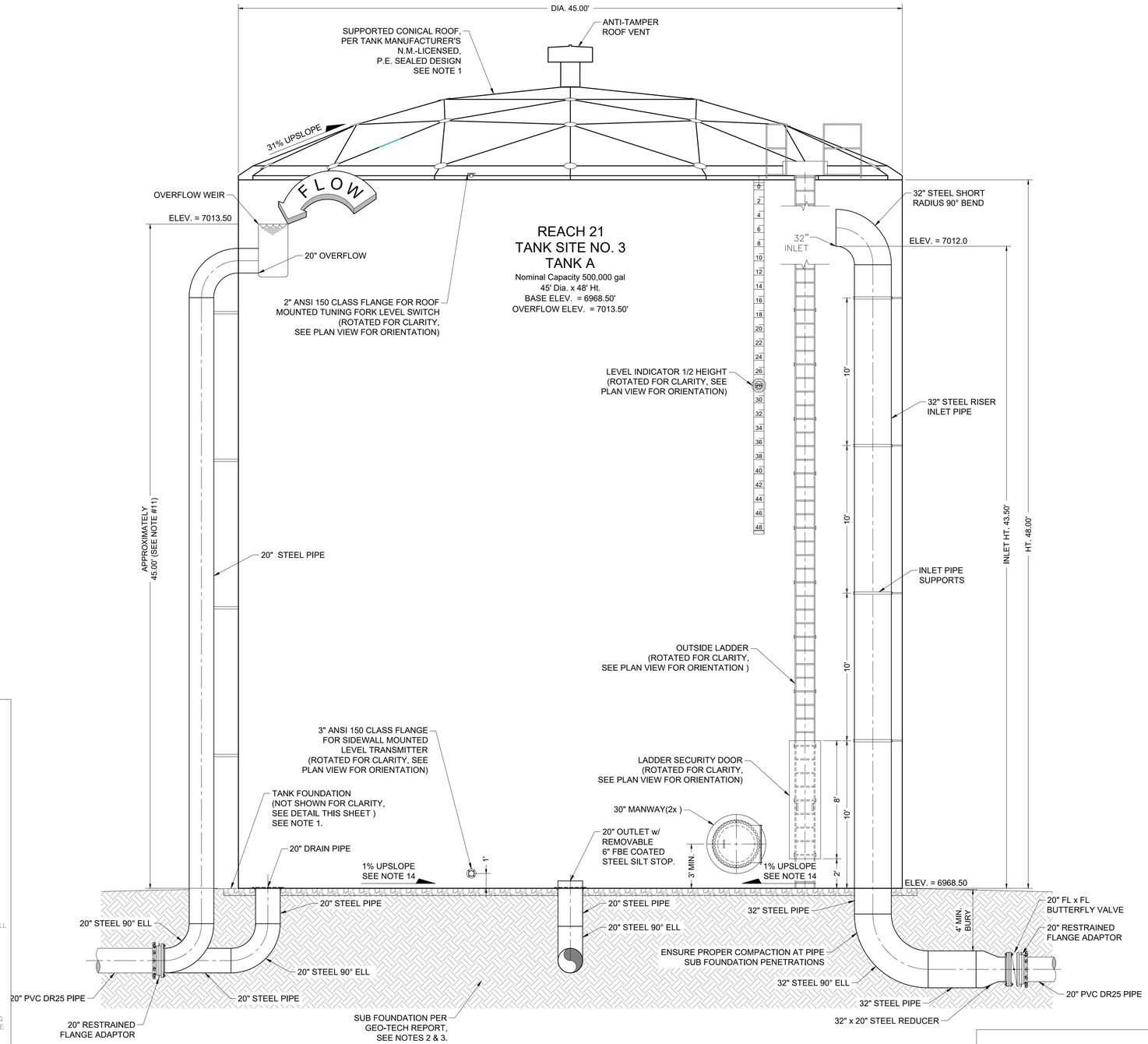

ELEVATION VIEW A-A

TANK SITE NO. 3
TANK A DETAIL

0' 4' 8'

DESIGN CODES:
IBC 2008
AWWA D103-09
ASCE 7-05

DESIGN PARAMETERS:
Roof Live Load = 15 psf
Roof Snow Load = 25 psf
Design S.G. = 1.0
Design Internal Pressure = Atm.
Design External Pressure = Atm.
Wind (AWWA D103-09):
Importance Factor = 1.15
Speed = 100 (3 Sec. Gust, mph)
Exposure Category = C
Seismic (AWWA D103-09):
Ss = 0.138 g SDS = 0.147 g
S1 = 0.054 g SD1 = 0.086 g
Av = 0.03 g
Seismic Use Group = III (AWWA D103)
Soil Site Class = D (Assumed)
Seismic Design Category = C (ASCE 7)

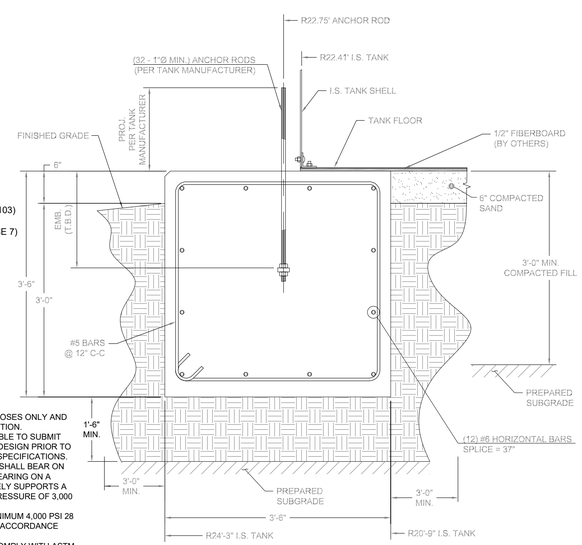

NOTES:
1. THIS DOCUMENT IS FOR BID PURPOSES ONLY AND IS NOT INTENDED FOR CONSTRUCTION.
2. TANK MANUFACTURER RESPONSIBLE TO SUBMIT FINAL PE STAMPED FOUNDATION DESIGN PRIOR TO CONSTRUCTION PER TECHNICAL SPECIFICATIONS.
3. THE TANK FLOOR AND RINGWALL SHALL BEAR ON COMPACTED STRUCTURAL FILL BEARING ON A PREPARED SUBGRADE THAT SAFELY SUPPORTS A MINIMUM ALLOWABLE BEARING PRESSURE OF 3,000 PSF.
4. ALL CONCRETE SHALL HAVE A MINIMUM 4,000 PSI 28 DAY COMPRESSIVE STRENGTH IN ACCORDANCE WITH ACI 318.
5. CONCRETE AGGREGATE SHALL COMPLY WITH ASTM C33 WITH A MAXIMUM AGGREGATE SIZE OF 1 1/2".
6. ALL REINFORCEMENT STEEL SHALL CONFORM TO THE ASTM A615 GRADE 60 SPECIFICATION.
7. DETAILING OF BAR SUPPORTS FOR REINFORCING STEEL SHALL BE IN ACCORDANCE WITH THE ACI STANDARD DETAILS AND DETAILING OF CONCRETE REINFORCEMENT AS REPORTED BY ACI COMMITTEE 315.

GENERAL SECTION
NOT TO SCALE

RECLAMATION
Managing Water in the West

SMA
Engineering • Environmental Surveying

ALWAYS THINK SAFETY

U.S. DEPARTMENT OF THE INTERIOR
BUREAU OF RECLAMATION
NAVAJO-GALLUP WATER SUPPLY PROJECT
NEW MEXICO

CUTTER LATERAL - REACH 21

WATER PIPELINE

NO.	DATE	REVISION	BY	APVD
0	12/10/2018	ISSUED FOR CONSTRUCTION	TT	JG

T Tadano
DESIGNED
M Howard / A Vogenthaler
DRAWN
J Garcia
CHECKED
TECH. APPR.
APPROVED
ADMIN APPROVAL - TITLE
FARMINGTON, NM 2019-02-04

TORY T. TADANO
NEW MEXICO
21878
LICENSED PROFESSIONAL ENGINEER
2/13/19

REACH 21 PIPELINE

TANK DETAILS
(2 of 2)

900-C-3302

SHEET 394 OF 405

DATE AND TIME PLOTTED 2/4/19
PLOTTED BY atav
CAD SYSTEM AUTOCAD
CAD FILENAME Reach 21Tank Details.dwg

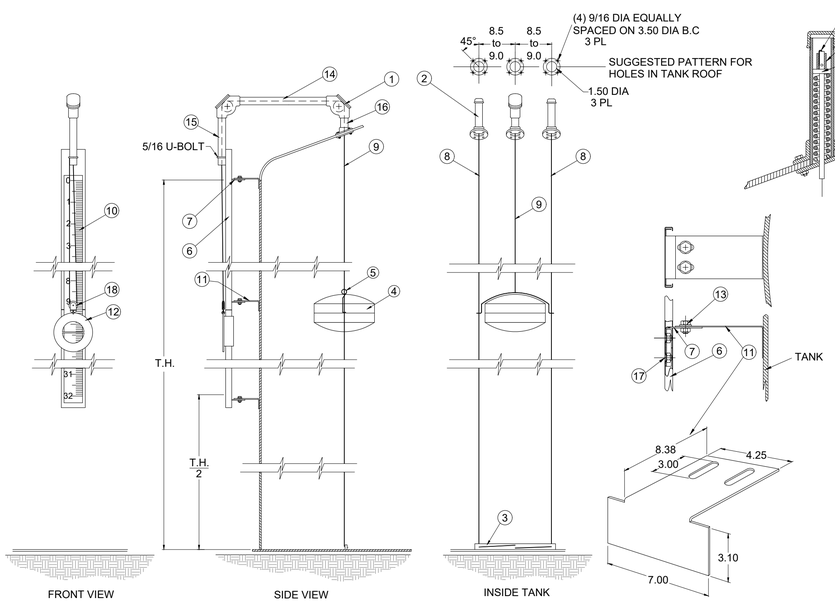

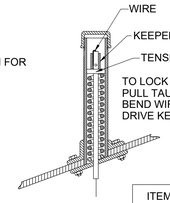

ITEM	NAME	MATERIAL
1	ELBOW, 90°	TEMPERATURE ULTEM PULLEY A356 ALUMINUM WITH HIGH
2	TOP ANCHOR TENSIONER	WITH STAINLESS STEEL SPRING HDG STEEL TENSIONER ASSEMBLY
3	BOTTOM ANCHOR	STAINLESS STEEL ANGLE
4	S/S FLOAT- 16#	WELD, FOAM FILLED .045H STAINLESS STEEL
5	CABLE FASTENERS	304 STAINLESS STEEL CRIMP & THIMBLE
6	GAUGE BOARD	16 GA HDG "C" CHANNEL
7	STD. TP BRACKETS	STAINLESS STEEL
8	FLOAT GUIDE WIRE	1/8" - 304 STAINLESS STEEL
9	FLOAT CABLE	3/32" - 304 STAINLESS STEEL
10	GAGE TAPE	ADHESIVE BACKED VINYL
11	BRACKET	STAINLESS STEEL
12	ROUND TARGET-9.5#	RED, POWDER COATED, DUCT. IRON
13	BOLT & NUT SETS	304 STAINLESS STEEL
14	PIPE (INCLUDED IN KIT)	1-1/2" x 16 HDG PIPE
15	PIPE (INCLUDED IN KIT)	1-1/2" x 14 HDG PIPE W/ PLUG
16	PIPE (INCLUDED IN KIT)	1-1/2" x 4 HDG PIPE
17	TRUSS HEAD S/S BOLTS, NYLOC NUTS & WASHERS	
18	1/2 TRAVEL PULLEY	STAINLESS STEEL

TYPICAL HALF HEIGHT LIQUID INDICATOR DETAILS

NOT TO SCALE

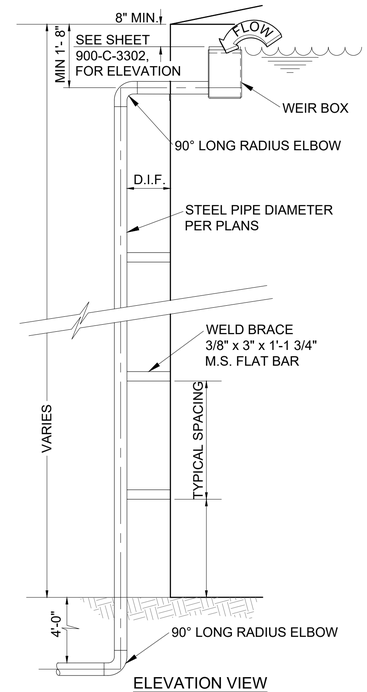

ELEVATION VIEW

TYPICAL TANK OVERFLOW DETAIL

NOT TO SCALE

SEE TANK PLAN AND ELEVATION SHEETS 900-C-3301 & 900-C-3302, FOR PIPE SIZE, HEIGHT AND ELEVATION.

NOTE:
1. DIMENSIONS INDICATING SEPARATION BETWEEN WEIR FROM ROOF ARE MINIMUMS ONLY. ACTUAL DIMENSIONS MAY BE GREATER TO ACCOMMODATE SLOSH WAVE, AS CALCULATED BY TANK MANUFACTURER.
2. TANK MANUFACTURER SHALL PROVIDE DESIGN CALCULATIONS AND FABRICATION DRAWINGS SEALED BY A NEW MEXICO LICENSED PROFESSIONAL ENGINEER.

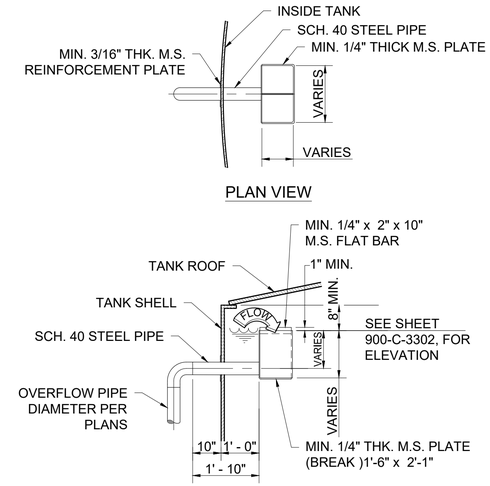

TYPICAL OVERFLOW WEIR DETAIL

NOT TO SCALE

NOTE:
DIMENSIONS OF WEIR AND APPURTENANCES PROVIDED ARE MINIMUMS. ACTUAL DIMENSIONS MAY BE LARGER TO PROVIDE FOR DESIGN FLOW RATES SPECIFIED IN THE TECHNICAL SPECIFICATIONS. ACTUAL WEIR DIMENSIONS SHALL BE PROVIDED AS PART OF THE TANK MANUFACTURER'S PROFESSIONAL ENGINEER SEALED DESIGN.

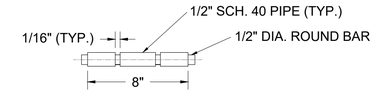

HINGE DETAIL - 2 EA. REQ'D

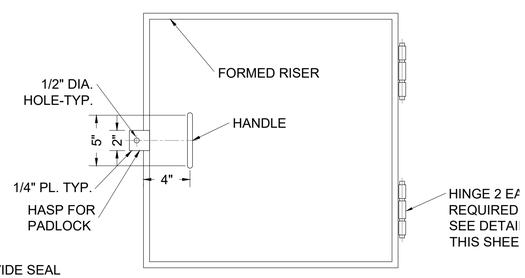

PLAN VIEW

30" SQUARE ROOF HATCH DETAIL

NOT TO SCALE

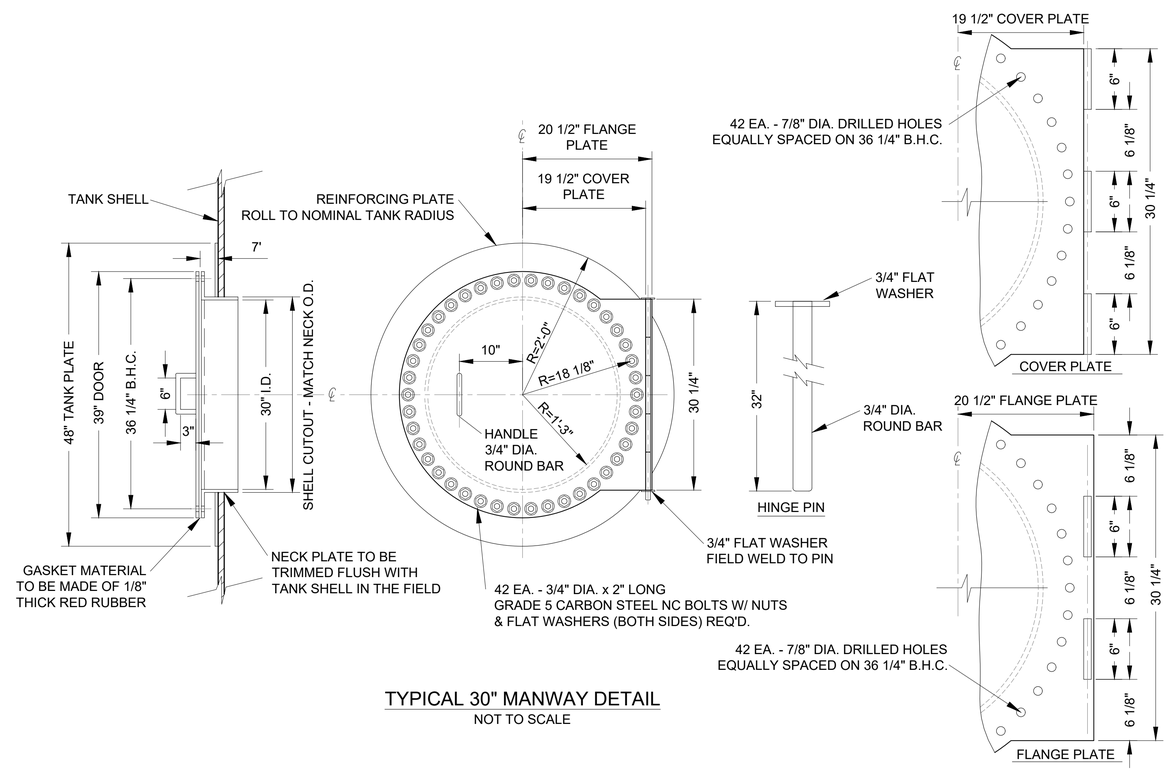

TYPICAL 30" MANWAY DETAIL

NOT TO SCALE

NOTE:
INSTALL CHANNEL GASKET TO PROVIDE SEAL BETWEEN TOP OF RISER AND BOTTOM OF LID. PROVIDE GAPS TO ALLOW FOR PROPER LID CLOSURE WITH GASKET IN PLACE

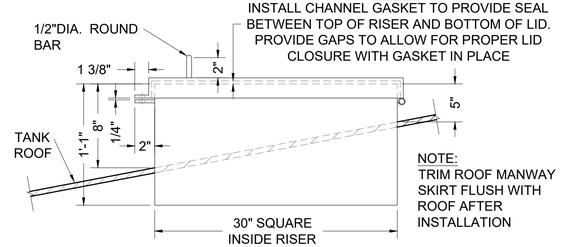

NOTE:
TRIM ROOF MANWAY SKIRT FLUSH WITH ROOF AFTER INSTALLATION

ELEVATION VIEW

30" SQUARE ROOF HATCH DETAIL

NOT TO SCALE

RECLAMATION
Managing Water in the West

SMA
Engineering • Environmental Surveying

ALWAYS THINK SAFETY

U.S. DEPARTMENT OF THE INTERIOR
BUREAU OF RECLAMATION
NAVAJO-GALLUP WATER SUPPLY PROJECT
NEW MEXICO

CUTTER LATERAL - REACH 21

WATER PIPELINE

NO.	DATE	REVISION	BY	APV'D
0	12/10/2018	ISSUED FOR CONSTRUCTION	TT	JG

T Tadano
DESIGNED
M Howard / A Vogenthaler
DRAWN
J Garcia
CHECKED
TECH. APPR.
APPROVED
NGWA PROJECT ENGINEER TITLE

FARMINGTON, NM 2019-02-04

REACH 21 PIPELINE

TYPICAL WATER STORAGE TANK DETAILS (1 of 2)

900-C-3303

SHEET 395 OF 405

TORY T. TADANO
NEW MEXICO
21878
LICENSED PROFESSIONAL ENGINEER
2/13/19

DATE AND TIME PLOTTED 2019-02-04
PLOTTED BY alvr

CAD SYSTEM AUTOCAD
CAD FILENAME Reach 21Tank Details.dwg

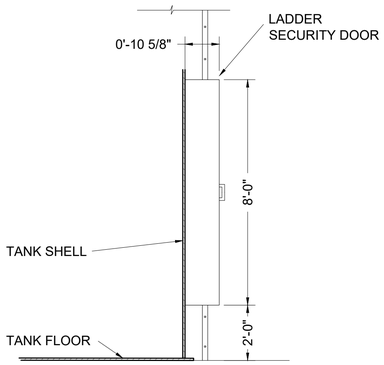

SIDE VIEW
NOT TO SCALE

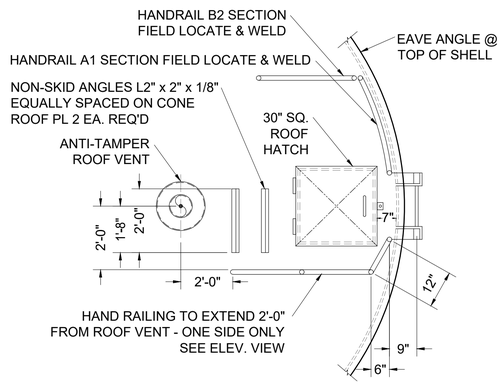

PLAN VIEW
NOT TO SCALE

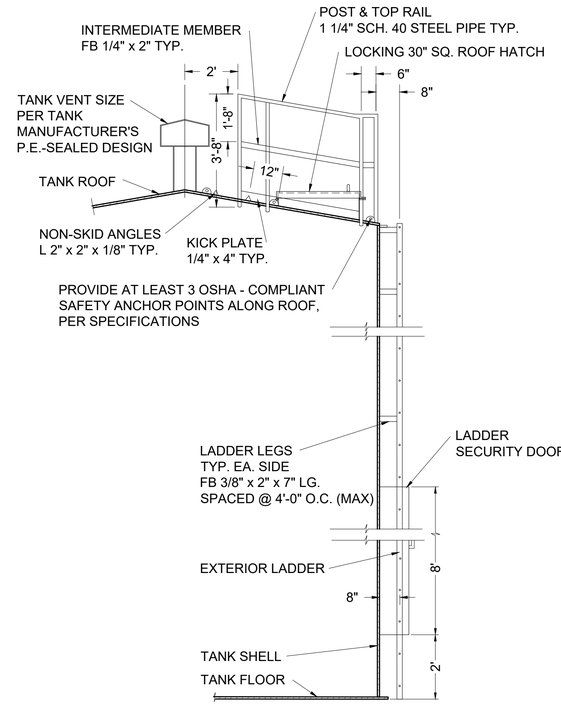

TANK CUTAWAY ELEVATION VIEW

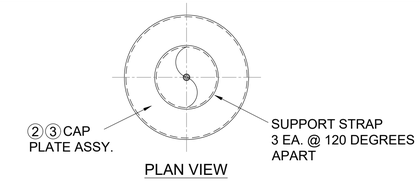

PLAN VIEW

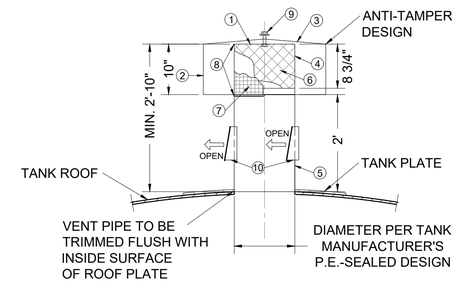

VERTICAL C/L OF TANK AND VENT WITH FROST PROOF DOORS
NOT TO SCALE

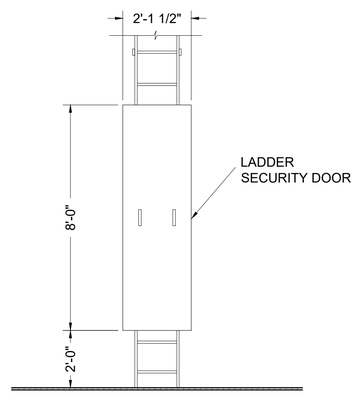

FRONT VIEW
NOT TO SCALE

LADDER SECURITY DOOR DETAILS
NOT TO SCALE

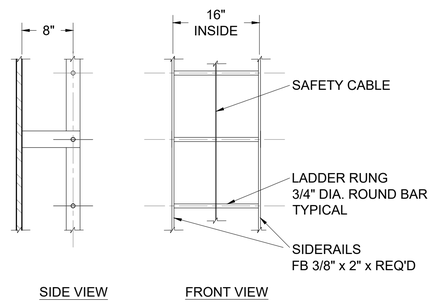

LADDER DETAILS
NOT TO SCALE

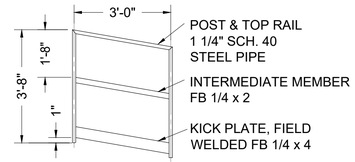

HANDRAIL B2 DETAIL
NOT TO SCALE

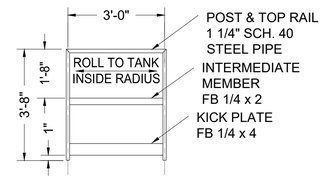

HANDRAIL A1 DETAIL - ONE REQ'D
NOT TO SCALE

BILL OF MATERIALS		
ITEM	QTY.	DESCRIPTION
①	1	3/16" THK. M.S. PLATE (CUT) 1' - 0" 3/4" Ø
②	1	10 GA. H.R. SHEET (ROLL) 10" x 6' - 3 3/8"
③	1	12 GA. H.R. SHEET (CUT) 2' - 0" Ø
④	3	3/16" x 1" M.S. FLAT BAR x 8 9/16"
⑤	1	1/4" THK. M.S. PLATE (ROLL) 16" x 3' - 2 1/2"
⑥	1	3/4 - #9 FLAT EXP. METAL (ROLL) 8 3/4" x 3' - 4"
⑦	1	24 MESH SCREEN (SST) 12" x 3' - 7"
⑧	2	STAINLESS STEEL WORM CLAMP (SST) 3/4" x 3' - 7"
⑨	1	1/2" x 3" HEX BOLT WITH (GRADE 2) NUT, & FLAT WASHER
⑩	4	6" x 8" FREEZE PROTECTION DOOR

12" VERTICAL ROOF DETAIL
NOT TO SCALE

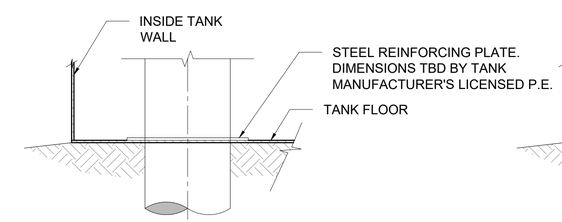

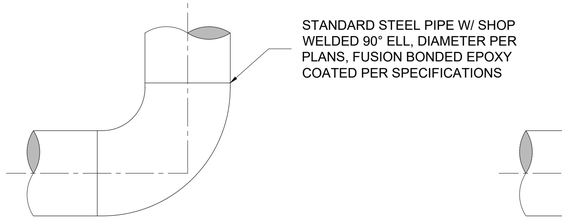

ELEVATION VIEW

32" INLET DETAIL
NOT TO SCALE

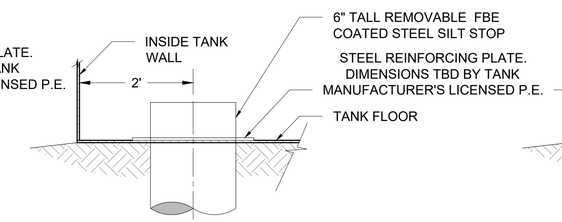

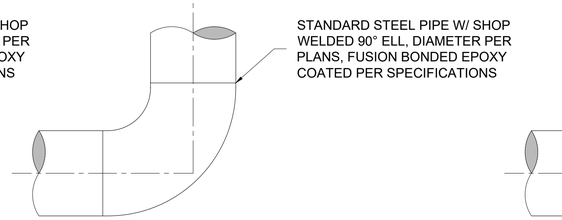

ELEVATION VIEW

20" OUTLET DETAIL
NOT TO SCALE

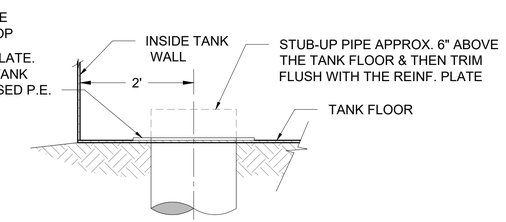

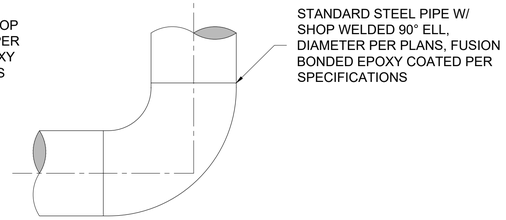

ELEVATION VIEW

20" TANK FLOOR DRAIN DETAIL
NOT TO SCALE

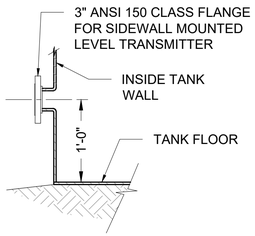

3" SIDEWALL FLANGE CONNECTION DETAIL
NOT TO SCALE

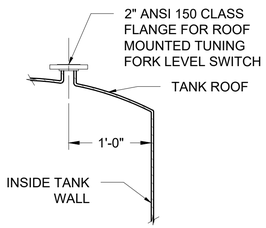

2" ROOF FLANGE CONNECTION DETAIL
NOT TO SCALE

RECLAMATION
Managing Water in the West

SMA
Engineering • Environmental Surveying

ALWAYS THINK SAFETY

U.S. DEPARTMENT OF THE INTERIOR
BUREAU OF RECLAMATION
NAVAJO-GALLUP WATER SUPPLY PROJECT
NEW MEXICO

CUTTER LATERAL - REACH 21

WATER PIPELINE

NO.	DATE	REVISION	BY	APVD
0	12/10/2018	ISSUED FOR CONSTRUCTION	TT	JG

T Tadano
DESIGNED
M Howard / A Vogenthaler
DRAWN
J Garcia
CHECKED
TECH. APPR.
APPROVED
SUPVR. HYDRAUL. TITLE

FARMINGTON, NM 2019-02-04

REACH 21 PIPELINE

TYPICAL WATER STORAGE TANK DETAILS (2 of 2)

900-C-3304

SHEET 396 OF 405

TORY T. TADANO
NEW MEXICO
21878
LICENSED PROFESSIONAL ENGINEER
2/13/19

DATE AND TIME PLOTTED 2/13/19
PLOTTED BY atrr

CAD SYSTEM AUTOCAD
CAD FILENAME Reach 21Tank Details.dwg

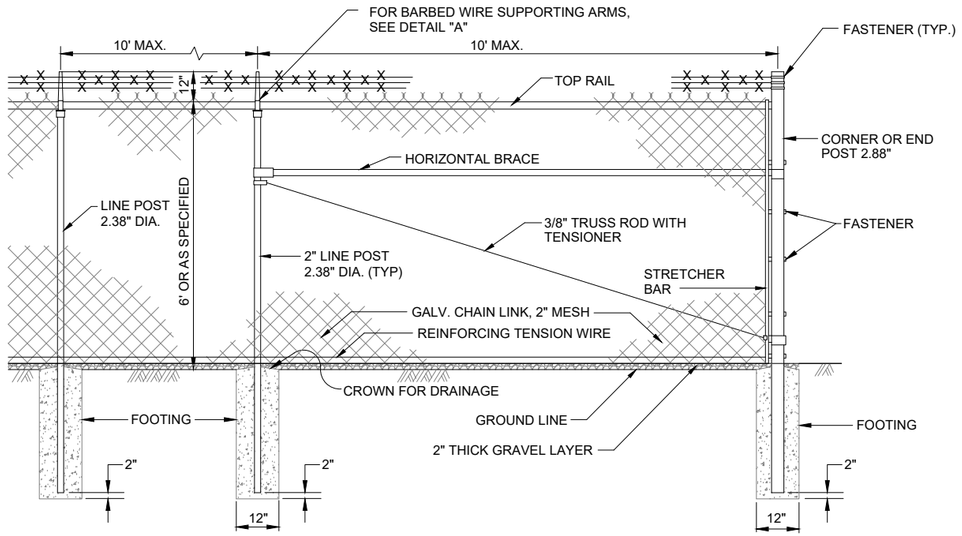

CHAIN LINK FENCE

NOT TO SCALE

NOTES:

1. AT BROW CROSSING, EMBED ON 6" CENTERS, 4-11/2" x 24" GALVANIZED RODS WITH 2" HOOKED END INTO BROW DITCH CONCRETE. EXPOSED END OF ROD SHALL BE WOVEN INTO FENCE FABRIC.
2. IMBED BOTTOM OF FABRIC MIN. 1" INTO THE 2" THICK GRAVEL LAYER.

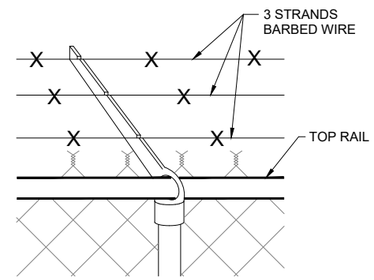

DETAIL "A" SUPPORTING ARM & BARBED WIRE

NOT TO SCALE

GATE POST

GATE LEAF WIDTH	GATE POST (OD)	FABRIC HEIGHT	"A" DIAM	"B" DEPTH	"C" POST EMBED.
10'-0"	4"	6'-0"	16"	56"	54"

LINE AND TERMINAL POSTS

FABRIC HEIGHT	TYPE POST	"A" DIAM	"B" DEPTH	"C" POST EMBED.
6'-0"	LINE	12"	38"	36"
	TERMINAL	12"	38"	36"

NOTES:

1. COMMON LOCKS SHALL BE PROVIDED FOR ALL FENCE GATES
2. TERMINAL POSTS INCLUDE END, CORNER, AND PULL POSTS

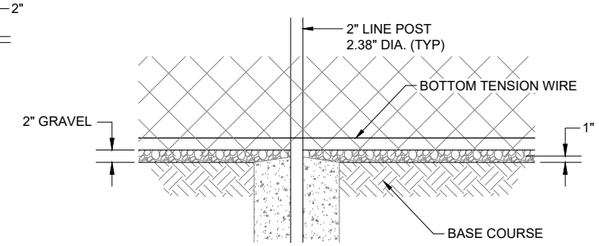

BASE COURSE AND GRAVEL DETAIL

NOT TO SCALE

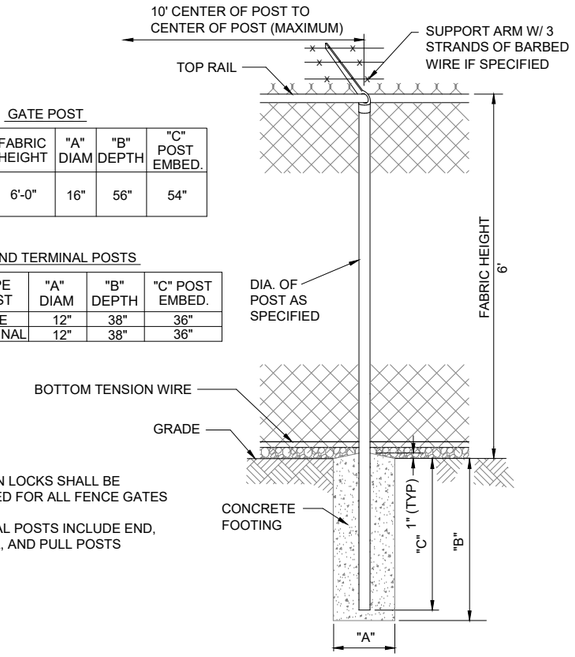

CHAIN LINK FENCE FOUNDATION

NOT TO SCALE

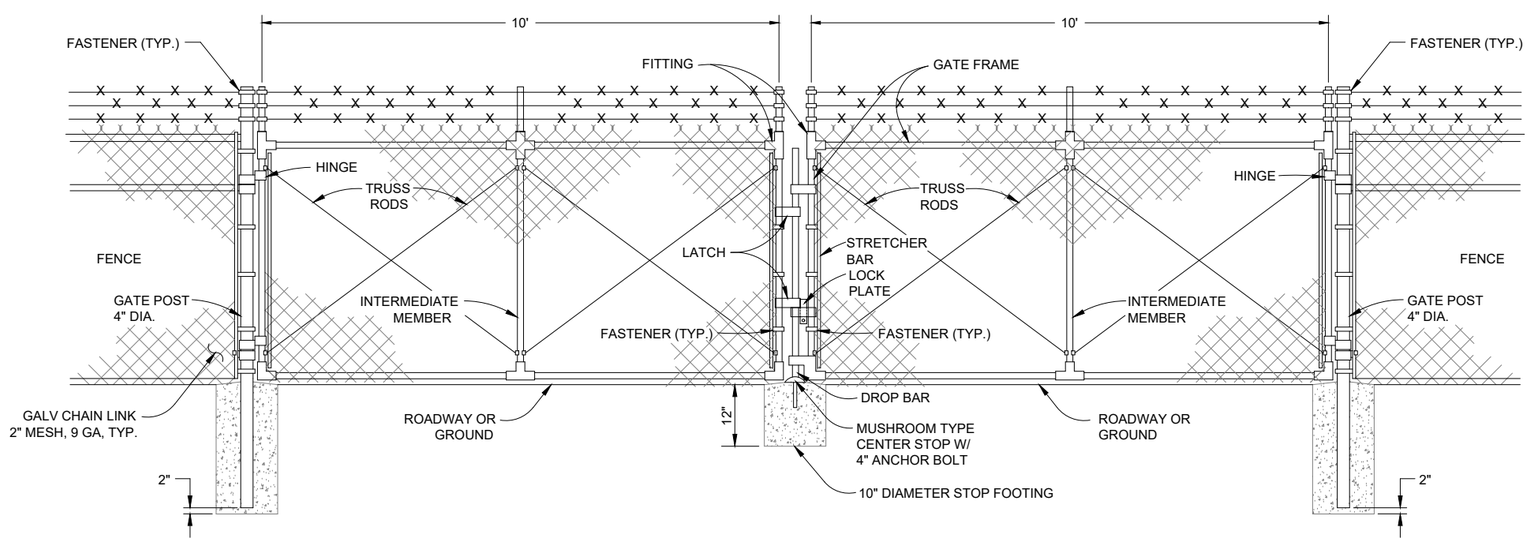

20' DOUBLE SWINGING VEHICLE GATE

NOT TO SCALE

RECLAMATION
Managing Water in the West

SMA
Engineering • Environmental Surveying

ALWAYS THINK SAFETY

U.S. DEPARTMENT OF THE INTERIOR
BUREAU OF RECLAMATION
NAVAJO-GALLUP WATER SUPPLY PROJECT
NEW MEXICO

CUTTER LATERAL - REACH 21

WATER PIPELINE

NO.	DATE	REVISION	BY	APV'D
0	12/10/2018	ISSUED FOR CONSTRUCTION	TT	JG

T Tadano
DESIGNED
M Howard / A Vogenthaler
DRAWN
J Garcia
CHECKED
TECH. APPR.
APPROVED
ADMIN APPROVAL - TITLE
FARMINGTON, NM 2018-11-28

TORY T. TADANO
NEW MEXICO
21073
LICENSED PROFESSIONAL ENGINEER
11/28/18

REACH 21 PIPELINE

STANDARD FENCE DETAILS

900-C-3305

SHEET 397 OF 405

DATE AND TIME PLOTTED 11/28/18
PLOTTED BY aav

CAD SYSTEM AUTOCAD
CAD FILENAME Reach 21 Fence Details.dwg

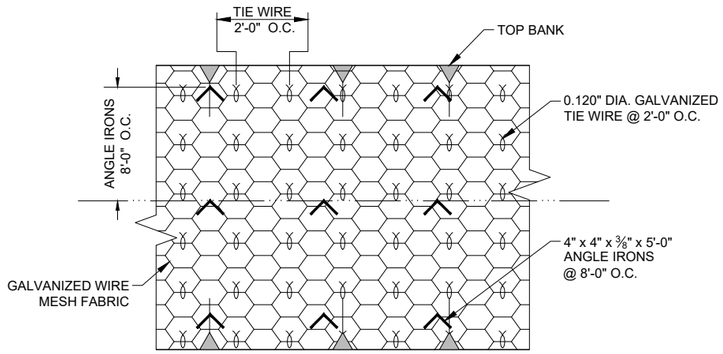

TYP. 18" RIP-RAP CAGE & ANCHORING

NOT TO SCALE

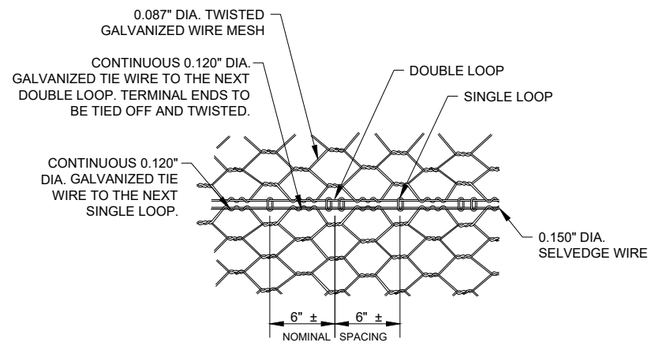

STANDARD JOINT CONNECTION DETAIL

NOT TO SCALE

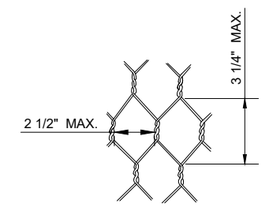

TWISTED MESH MATTRESS

NOT TO SCALE

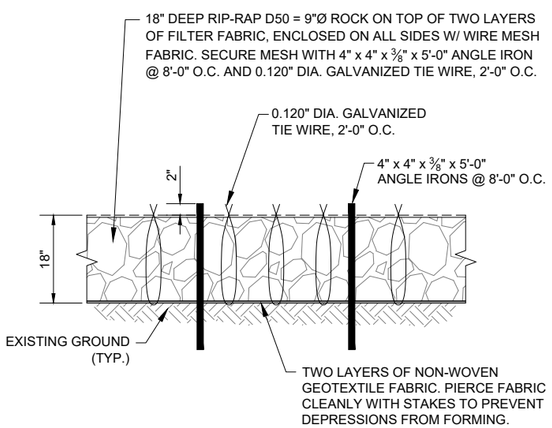

CROSS SECTION

TYPICAL 18" RIP-RAP DETAIL

NOT TO SCALE

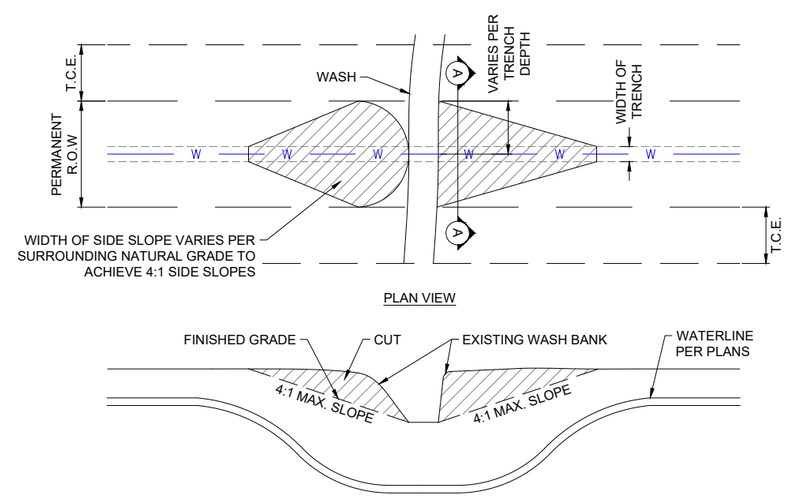

WASH CROSSING GRADING DETAIL

NOT TO SCALE

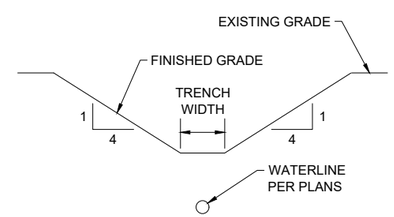

SECTION A-A

NOTE:

1. ALL GRADING MUST REMAIN WITHIN TEMPORARY CONSTRUCTION EASEMENT.

RECLAMATION
Managing Water in the West

SMA
Engineering • Environmental Surveying

ALWAYS THINK SAFETY

U.S. DEPARTMENT OF THE INTERIOR
BUREAU OF RECLAMATION
NAVAJO-GALLUP WATER SUPPLY PROJECT
NEW MEXICO

CUTTER LATERAL - REACH 21

WATER PIPELINE

NO.	DATE	REVISION	BY	APVD
0	12/10/2018	ISSUED FOR CONSTRUCTION	TT	JG

T Tadano
DESIGNED
M Howard / A Vogenthaler
DRAWN
J Garcia
CHECKED
TECH. APPR.
APPROVED
APPROVAL - TITLE

FARMINGTON, NM 2018-11-28

REACH 21 PIPELINE

EROSION
CONTROL DETAILS
(1 of 2)

900-C-3306

SHEET 398 OF 405

TORY T. TADANO
NEW MEXICO
21073
11/28/18
LICENSED PROFESSIONAL ENGINEER

DATE AND TIME PLOTTED
11/28/18
PLOTTED BY
aarr

CAD SYSTEM
AUTOCAD
CAD FILENAME
Reach 21 SWPPP-BMP Details.dwg

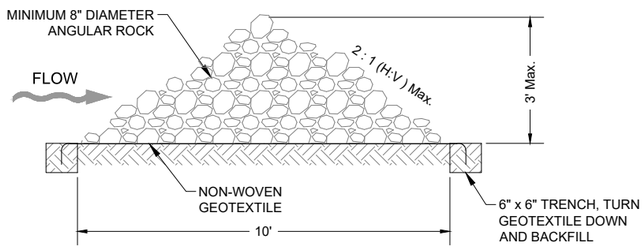

TYPICAL ROCK DAM SECTION

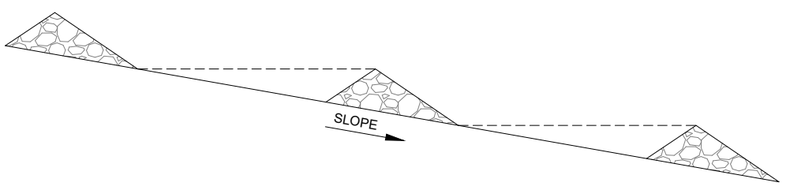

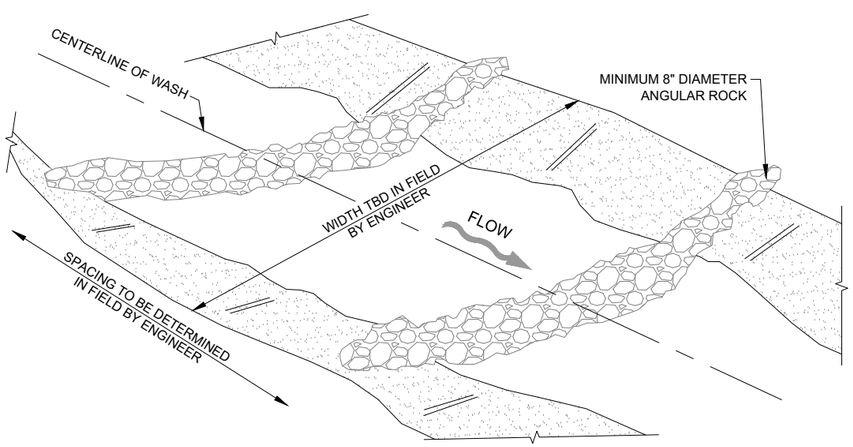

ISOMETRIC VIEW

ROCK CHECK DAM DETAIL

NOT TO SCALE

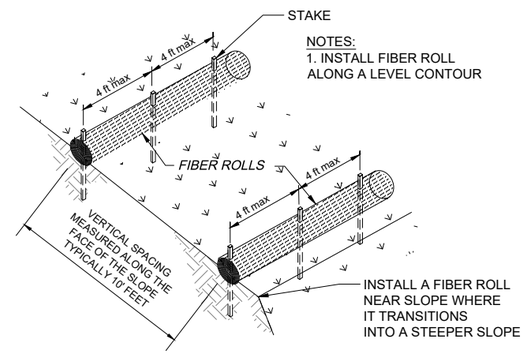

NOTES:
1. INSTALL FIBER ROLL ALONG A LEVEL CONTOUR

TYPICAL FIBER ROLL INSTALLATION

NOT TO SCALE

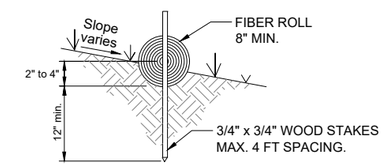

ENTRENCHMENT DETAIL

NOT TO SCALE

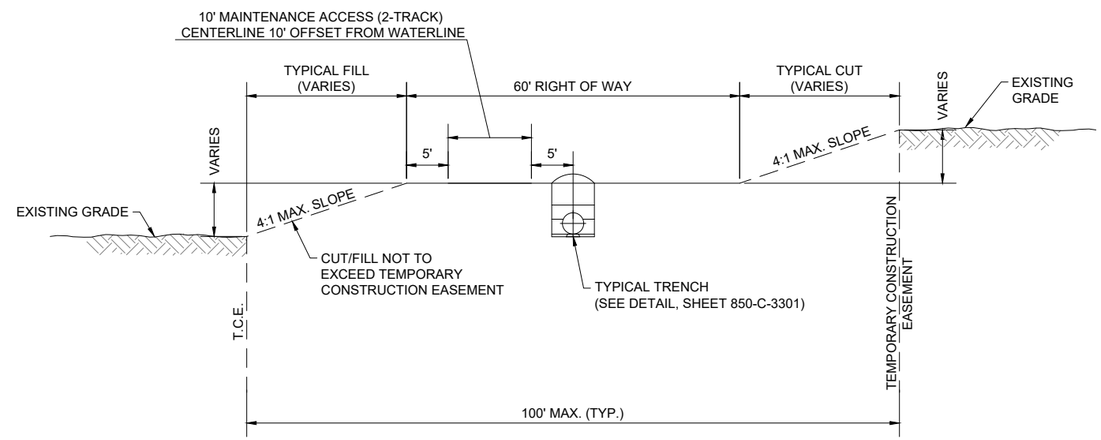

TYPICAL PIPELINE ROW FINISHED GRADING DETAIL

NOT TO SCALE

NOTES:

1. ALL DISTURBED EARTH SHALL BE COMPACTED AND RESEEDED AS REQUIRED PER 850-C-3301 AND SPECIFICATIONS.
2. TOTAL WIDTH REDUCED IN AREAS WHERE TEMPORARY CONSTRUCTION EASEMENT IS TRUNCATED DUE TO ADJACENT CULTURALLY SENSITIVE AREAS, ROADWAYS, PRIVATE PROPERTIES, ETC.
3. FINAL GRADING AND SLOPE STABILIZATION MUST BE APPROVED BY ENGINEER AND BLM.

TORY T. TADANO
NEW MEXICO
21073
11/28/18
LICENSED PROFESSIONAL ENGINEER

RECLAMATION
Managing Water in the West

SMA
Engineering • Environmental Surveying

ALWAYS THINK SAFETY

U.S. DEPARTMENT OF THE INTERIOR
BUREAU OF RECLAMATION
NAVAJO-GALLUP WATER SUPPLY PROJECT
NEW MEXICO

CUTTER LATERAL - REACH 21

WATER PIPELINE

NO.	DATE	REVISION	BY	APV'D
0	12/10/2018	ISSUED FOR CONSTRUCTION	TT	JG

T Tadano
DESIGNED
M Howard / A Vogenthaler
DRAWN
J Garcia
CHECKED
TECH. APPR.
APPROVED
ADMIN APPROVAL - TITLE

FARMINGTON, NM 2018-11-28

REACH 21 PIPELINE

EROSION CONTROL
DETAILS (2 of 2)
AND R-O-W GRADING

900-C-3307

SHEET 399 OF 405

DATE AND TIME PLOTTED 11/28/18
PLOTTED BY aav
CAD SYSTEM AUTOCAD
CAD FILENAME Reach 21 SWPPP-BMP Details.dwg

ALL SIGNS ARE BLACK ON ORANGE
UNLESS OTHERWISE SPECIFIED

EACH SIGN FACE SHOWN ON PLANS SHALL MEET THE SPECIFICATIONS IN THE STANDARD HIGHWAY SIGNS MANUAL (CURRENT EDITION) FOR PROPER ARRANGEMENT AND SPACING OF LETTERS, LETTER HEIGHT, LETTER SERIES, SYMBOLS, AND BORDERS FOR THE SPECIFIED SIZE AND MESSAGE AS SHOWN ON THE PLANS.

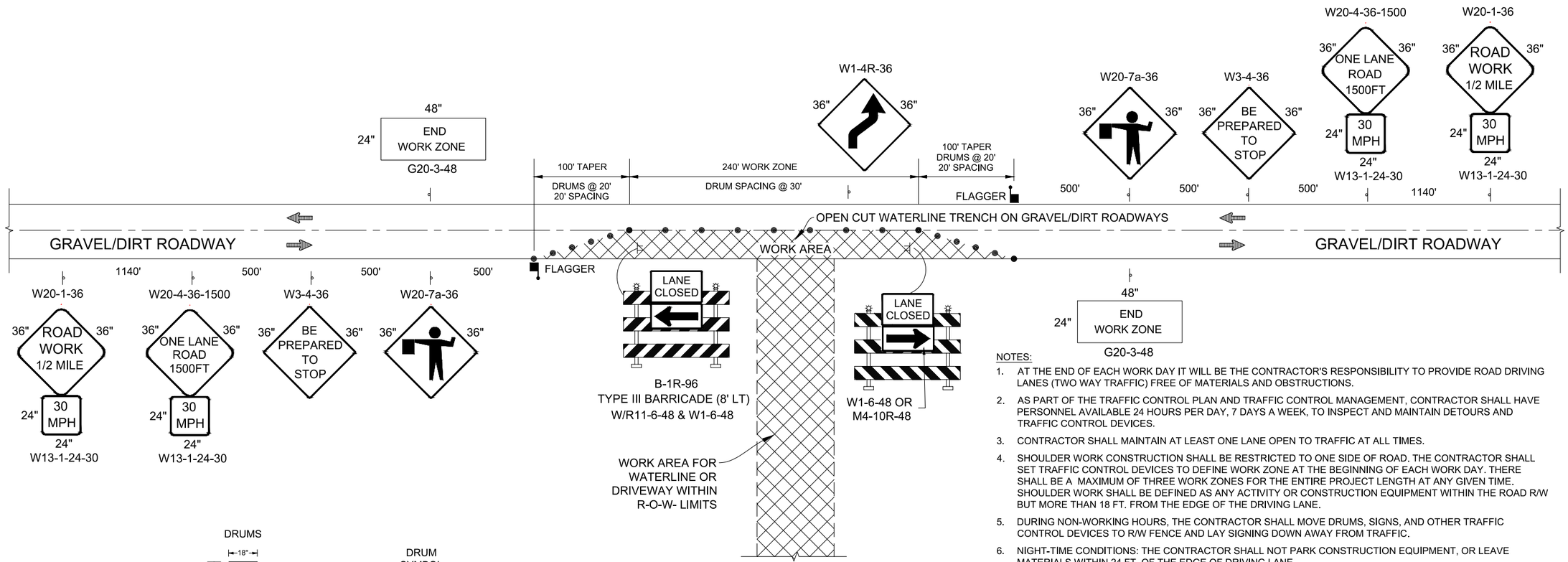

DRUMS

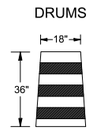

DRUM SYMBOL

ALL DRUMS SHALL COMPLY WITH THE SPECIFICATIONS OF SECTION 702-TRAFFIC CONTROL DEVICES FOR CONSTRUCTION, NMSHTD STANDARD SPECIFICATIONS FOR HIGHWAY AND BRIDGE CONSTRUCTION, CURRENT EDITION

TRAFFIC CONTROL LAYOUT - LANE CLOSURE OF GRAVEL/DIRT ROADWAY FOR CONSTRUCTION OF WATERLINE CROSSING OR CONSTRUCTION OF DRIVEWAY

NOT TO SCALE

LANE CLOSURE (LEFT AND RIGHT)
OPEN CUT GRAVEL/DIRT ROADWAYS

NMDOT CHANNELIZATION DEVICES, TYPE: DRUM, NO. 702525.
TOTAL OF 19 DRUMS REQUIRED.

NOTES:

1. AT THE END OF EACH WORK DAY IT WILL BE THE CONTRACTOR'S RESPONSIBILITY TO PROVIDE ROAD DRIVING LANES (TWO WAY TRAFFIC) FREE OF MATERIALS AND OBSTRUCTIONS.
2. AS PART OF THE TRAFFIC CONTROL PLAN AND TRAFFIC CONTROL MANAGEMENT, CONTRACTOR SHALL HAVE PERSONNEL AVAILABLE 24 HOURS PER DAY, 7 DAYS A WEEK, TO INSPECT AND MAINTAIN DETOURS AND TRAFFIC CONTROL DEVICES.
3. CONTRACTOR SHALL MAINTAIN AT LEAST ONE LANE OPEN TO TRAFFIC AT ALL TIMES.
4. SHOULDER WORK CONSTRUCTION SHALL BE RESTRICTED TO ONE SIDE OF ROAD. THE CONTRACTOR SHALL SET TRAFFIC CONTROL DEVICES TO DEFINE WORK ZONE AT THE BEGINNING OF EACH WORK DAY. THERE SHALL BE A MAXIMUM OF THREE WORK ZONES FOR THE ENTIRE PROJECT LENGTH AT ANY GIVEN TIME. SHOULDER WORK SHALL BE DEFINED AS ANY ACTIVITY OR CONSTRUCTION EQUIPMENT WITHIN THE ROAD R/W BUT MORE THAN 18 FT. FROM THE EDGE OF THE DRIVING LANE.
5. DURING NON-WORKING HOURS, THE CONTRACTOR SHALL MOVE DRUMS, SIGNS, AND OTHER TRAFFIC CONTROL DEVICES TO R/W FENCE AND LAY SIGNING DOWN AWAY FROM TRAFFIC.
6. NIGHT-TIME CONDITIONS: THE CONTRACTOR SHALL NOT PARK CONSTRUCTION EQUIPMENT, OR LEAVE MATERIALS WITHIN 24 FT. OF THE EDGE OF DRIVING LANE.
7. THE CONTRACTOR SHALL PROVIDE ACCESS TO ALL DRIVEWAYS AND TURNOUTS AT ALL TIMES.
8. LANE CLOSURE SHALL BE USED WHEN ANY CONSTRUCTION EQUIPMENT, CONSTRUCTION MATERIAL, OR CONSTRUCTION OBJECTS ARE WITHIN 18 FT. FROM EDGE OF DRIVING LANE.
9. ALL CONSTRUCTION TRAFFIC CONTROL DEVICES SHALL COMPLY WITH BIA-NAVAJO REGIONAL OFFICE DEPARTMENT OF TRANSPORTATION REQUIREMENTS, SANDOVAL COUNTY ROAD DEPARTMENT / PUBLIC WORKS REQUIREMENTS, THE NEW MEXICO STATE DEPARTMENT OF TRANSPORTATION STANDARD SPECIFICATIONS FOR HIGHWAY AND BRIDGE CONSTRUCTION, LATEST EDITION, AND THE MANUAL ON UNIFORM TRAFFIC CONTROL DEVICES, LATEST EDITION.
10. EXCEPT DURING AN EMERGENCY, NO NIGHT-TIME WORK TO BE PERFORMED.
11. ALL STAGING AREAS AND MATERIAL AND EQUIPMENT STORAGE SHALL BE CONFINED TO PROJECT R/W AND ARE SUBJECT TO THE SAME RESTRICTIONS AS THE WORK AREAS AS SET FORTH ABOVE.
12. FOLLOW ALL ROAD CROSSING PERMITS FOR GRAVEL/DIRT ROADS.

TORY T. TADANO
NEW MEXICO
21073
11/28/18
LICENSED PROFESSIONAL ENGINEER

RECLAMATION
Managing Water in the West

SMA
Engineering • Environmental Surveying

ALWAYS THINK SAFETY

U.S. DEPARTMENT OF THE INTERIOR
BUREAU OF RECLAMATION
NAVAJO-GALLUP WATER SUPPLY PROJECT
NEW MEXICO

CUTTER LATERAL - REACH 21

WATER PIPELINE

NO.	DATE	REVISION	BY	APV'D
0	12/10/2018	ISSUED FOR CONSTRUCTION	TT	JG

T Tadano
DESIGNED
M Howard / A Vogenthaler
DRAWN
J Garcia
CHECKED
TECH. APPR.
APPROVED
ADMIN APPROVAL - TITLE

FARMINGTON, NM 2018-11-28

REACH 21 PIPELINE

TRAFFIC CONTROL
(GRAVEL AND DIRT ROAD)

900-C-3308

SHEET 400 OF 405

DATE AND TIME PLOTTED
11/28/18
PLOTTED BY
aav

CAD SYSTEM
AUTOCAD
CAD FILENAME
Reach 21 Traffic Control.dwg

GENERAL NOTES

1. REFER TO SPECIFICATION 33 05 16.13 FOR STRUCTURAL DETAILS ON PREFABRICATED BUILDING.
2. PROVIDE ELECTRICAL EQUIPMENT AS SPECIFIED IN 33 05 16.13.

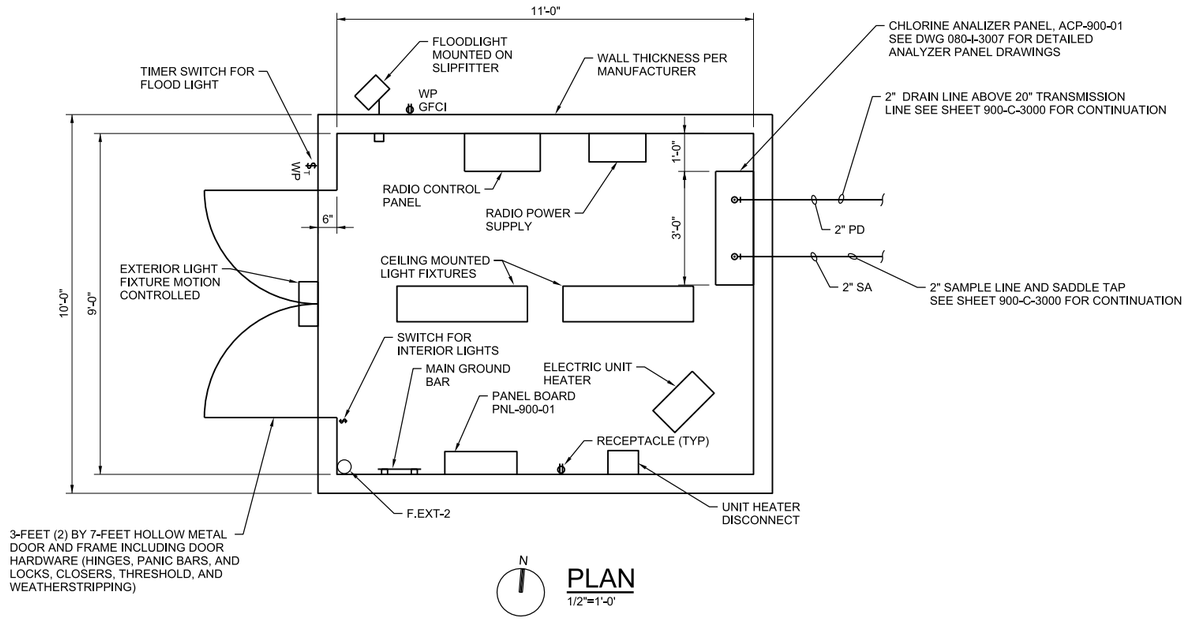

N

PLAN

1/2"=1'-0'

RECLAMATION
Managing Water in the West

ch2m

VERIFY SCALE
BAR IS ONE INCH ON ORIGINAL DRAWING.
0 1"

ALWAYS THINK SAFETY

U.S. DEPARTMENT OF THE INTERIOR
BUREAU OF RECLAMATION
NAVAJO-GALLUP WATER SUPPLY PROJECT
NEW MEXICO

CUTTER LATERAL - REACH 21

WATER TREATMENT PLANT

NO.	DATE	REVISION	BY	APV'D
0	02/13/2019	ISSUED FOR CONSTRUCTION	MK	JP

S MENK
DESIGNED
E ARMIJO
DRAWN
J HONEA
CHECKED
S MENK
TECH. APPR.
J PETERSON
APPROVED
ADMIN APPROVAL -

FARMINGTON, NM FEBRUARY 2019

TANK 3 SUPPORT FACILITY

PROCESS PLAN

900-D-2001

SHEET 401 OF 405

DATE PLOTTED 1/29/2019
TIME PLOTTED 9:43:37 PM

CAD SYSTEM
CAD FILENAME 900-D-2001_082853.dgn

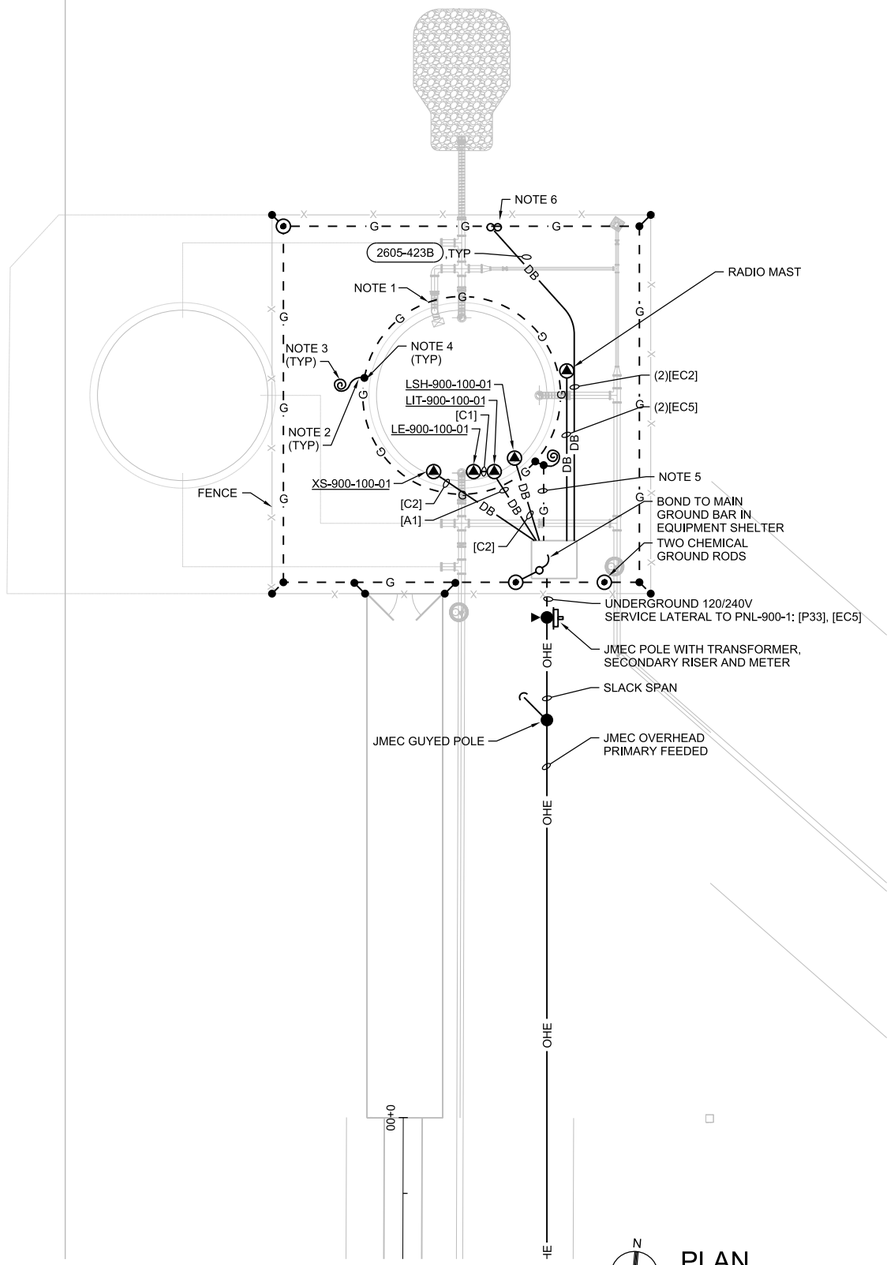

PLAN
1"=20'

GENERAL NOTES

1. TANK SITE GROUNDING ELECTRODE SYSTEM: 4/0 AWG BARE COPPER WIRE EMBEDDED IN LOWER 1/3 OF TANK FOUNDATION. INSTALL WITH MINIMUM 3 INCHES OF CONCRETE COVER.
2. GROUND CONNECTION PLATE: NEMA 4 HOLE, WITH COMPRESSION CONNECTION SUITABLE FOR 4/0 AWG WIRE. BURNDY YGF OR APPROVED EQUAL. INSTALL ON THE VERTICAL FACE OF THE FOUNDATION, 6 INCHES BELOW TOC.
3. PIGTAIL: 4/0 AWG BARE COPPER WIRE.
4. EXOTHERMIC CONNECTION.
5. GROUNDING ELECTRODE CONDUCTOR: DIRECT-BURIED 4/0 AWG COPPER WIRE FROM PNL-900-1 GROUND BUS TO PIGTAIL CONNECTED TO TANK SITE GROUNDING ELECTRODE SYSTEM.
6. CONDUIT FOR HEAT TRACE SYSTEM. SWEEP CONDUIT UP AND TERMINATE 12 INCHES ABOVE GRADE, CAP.

RECLAMATION
Managing Water in the West

ch2m

VERIFY SCALE
BAR IS ONE INCH ON ORIGINAL DRAWING.
0 1"

ALWAYS THINK SAFETY

U.S. DEPARTMENT OF THE INTERIOR
BUREAU OF RECLAMATION
NAVAJO-GALLUP WATER SUPPLY PROJECT
NEW MEXICO

CUTTER LATERAL - REACH 21

WATER TREATMENT PLANT

NO.	DATE	REVISION	BY	APVD
0	02/13/2019	ISSUED FOR CONSTRUCTION	MK	JP

J LANDMAN
DESIGNED
A CUGLIAT
DRAWN
M GUPTA
CHECKED
J LANDMAN
TECH. APPR.
J PETERSON
APPROVED
ADMIN APPROVAL -

FARMINGTON, NM FEBRUARY 2019

JAMES K. LANDMAN
NEW MEXICO
14436
2/13/19
PROFESSIONAL ENGINEER

TANK 3 SUPPORT FACILITY

ELECTRICAL PLAN

900-E-2001

SHEET 402 OF 405

DATE PLOTTED 1/29/2019
TIME PLOTTED 9:44:20 PM

CAD SYSTEM
CAD FILENAME 900-E-2001_682853.dgn

CONDUIT		CONDUCTORS				GROUND				
NUMBER	SIZE	#	SIZE	TYPE	#	SIZE	TYPE		DESCRIPTION	CONNECTING SEGMENTS
C-900-001		2	14	XHHW-2				FR:	XS-900-100-01	C-900-003
								TO:	CONDUIT TEE	
								1	[C2] >> XS-900-100-01 CONTROL	
C-900-002		2	12	XHHW-2				FR:	LSH-900-100-01	C-900-003
								TO:	CONDUIT TEE	
								1	[C2] >> XS-900-100-01 POWER	
C-900-003		4	12	XHHW-2				FR:	CONDUIT TEE	
								TO:	EQUIPMENT SHELTER	
								1	[C2] >> XS-900-100-01 CONTROL	C-900-001
								1	[C2] >> XS-900-100-01 POWER	C-900-002
S-900-01								FR:	LSH-900-100-01	
								TO:	EQUIPMENT SHELTER	
EC-900-001								FR:	RADIO TOWER	
								TO:	EQUIPMENT SHELTER	
								2	[EC-5]>> SPARE	
EC-900-002								FR:	HEAT TRAC E	
								TO:	EQUIPMENT SHELTER	
								2	[EC-2]>> SPARE	

RECLAMATION
Managing Water in the West

ch2m

VERIFY SCALE
BAR IS ONE INCH ON ORIGINAL DRAWING.
0 1"

ALWAYS THINK SAFETY

U.S. DEPARTMENT OF THE INTERIOR
BUREAU OF RECLAMATION
NAVAJO-GALLUP WATER SUPPLY PROJECT
NEW MEXICO

CUTTER LATERAL - REACH 21

WATER TREATMENT PLANT

NO.	DATE	REVISION	BY	APVD
0	02/13/2019	ISSUED FOR CONSTRUCTION	MK	JP

J LANDMAN
DESIGNED
A CUGLIAT
DRAWN
M GUPTA
CHECKED
J LANDMAN
TECH. APPR.
J PETERSON
APPROVED
ADMIN APPROVAL -

FARMINGTON, NM FEBRUARY 2019

JAMES K. LANDMAN
NEW MEXICO
14436
2/13/19
PROFESSIONAL ENGINEER

TANK 3 SUPPORT FACILITY

ELECTRICAL
CABLE AND RACEWAY
SCHEDULE

900-E-6401

SHEET 403 OF 405

DATE PLOTTED 1/29/2019
TIME PLOTTED 9:42:53 PM

CAD SYSTEM
CAD FILENAME 900-E-6401_682853.dgn

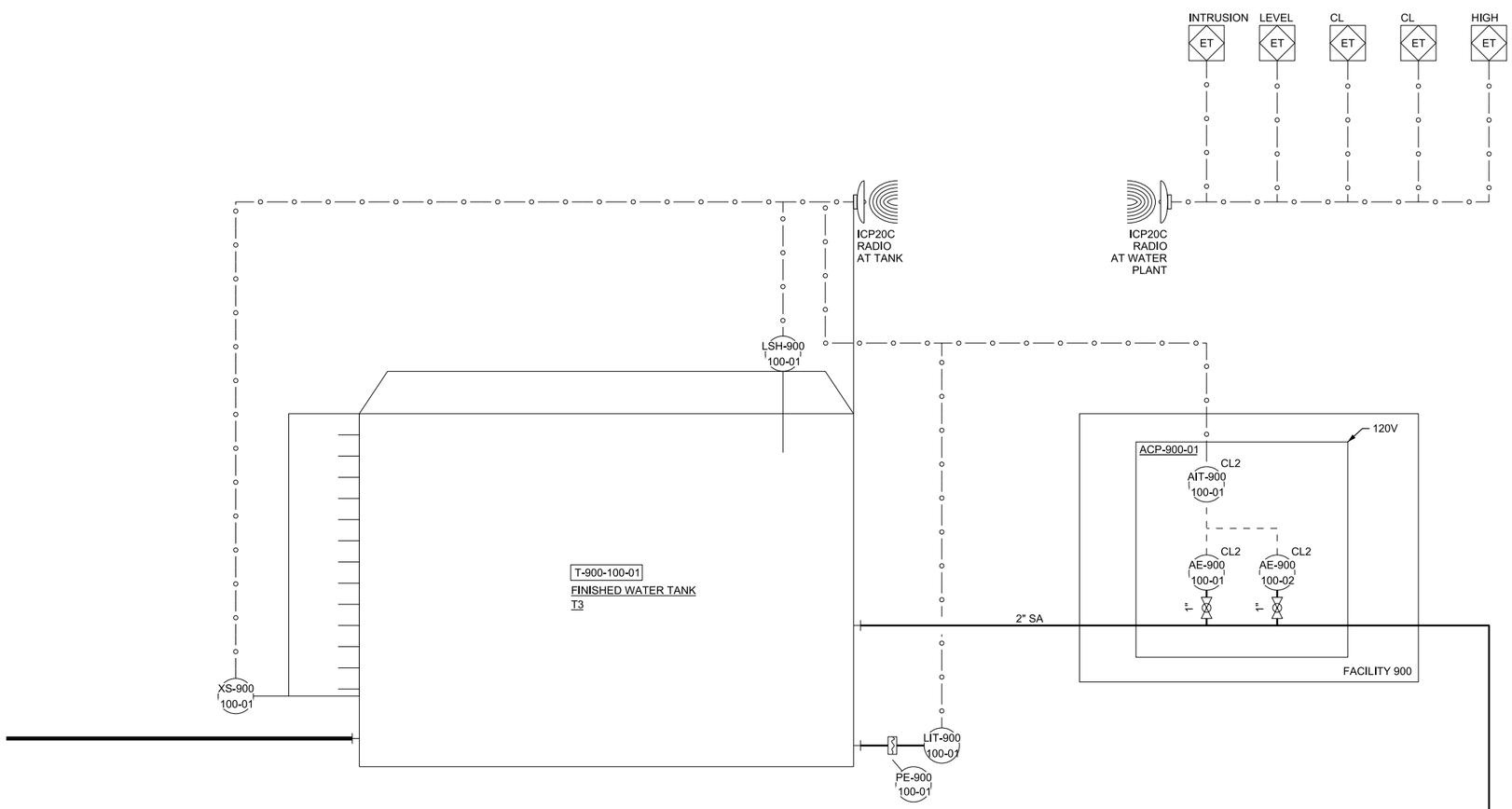

RECLAMATION
Managing Water in the West

ch2m

VERIFY SCALE
BAR IS ONE INCH ON ORIGINAL DRAWING.
0 1"

ALWAYS THINK SAFETY

U.S. DEPARTMENT OF THE INTERIOR
BUREAU OF RECLAMATION
NAVAJO-GALLUP WATER SUPPLY PROJECT
NEW MEXICO

CUTTER LATERAL - REACH 21

WATER TREATMENT PLANT

NO.	DATE	REVISION	BY	APVD
0	02/13/2019	ISSUED FOR CONSTRUCTION	MK	JP

D THOMAS
DESIGNED
S FLASKA
DRAWN
A ELLIS
CHECKED
J LANDMAN
TECH. APPR.
J PETERSON
APPROVED
ADMIN APPROVAL -

FARMINGTON, NM FEBRUARY 2019

JAMES K. LANDMAN
NEW MEXICO
14436
2/13/19
PROFESSIONAL ENGINEER

TANK 3 SUPPORT FACILITY

FINISHED WATER P&ID

900-I-0001

SHEET 404 OF 405

DATE PLOTTED 1/29/2019
TIME PLOTTED 9:44:01 PM

CAD SYSTEM
CAD FILENAME 900-I-0001_s82833.dgn

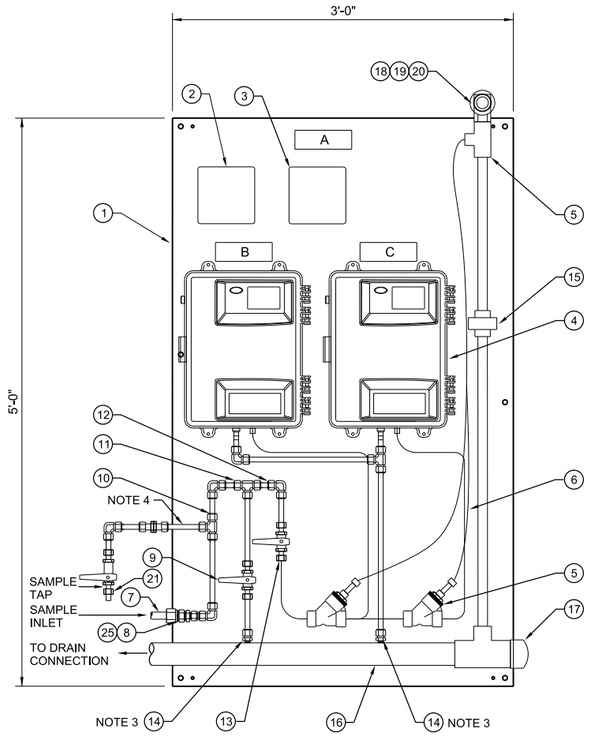

GENERAL NOTES

1. ONLY THE BACK PANEL IS REQUIRED. ENCLOSURE, HEATER AND A/C UNIT ARE NOT REQUIRED.
2. OPENING AT BACK OF PANEL FOR PIPE PENETRATION SEAL WATER TIGHT.
3. DRILL AND TAP CONNECTION.
4. PROVIDE OPENING INSIDE OF PANEL FOR SAMPLE PIPING. FABRICATE SAMPLE TAP AND REMOVE AT TEE FOR SHIPMENT TO PROJECT SITE.

TYPICAL ANALYZER PANEL CL2 - COLORMETRIC

BILL OF MATERIALS

Item	Qty	Description	Manufacturer	Part Number	Notes
1	1	Enclosure Back Panel 60" x 36"	Hoffman	A60P36F1	
2	1	120 VAC Terminal Junction Box	Hoffman		
3	1	24 VDC Terminal Junction Box	Hoffman		
4	2	Chlorine Analyzer	HACH	5440001	Supplied by CH2M Hill
5	2	Sample Conditioning Unit	HACH	Included with Chlorine Analyzer	Supplied by CH2M Hill
6	As Req	1/4" OD Flexible Tubing	HACH	Included with Chlorine Analyzer	
7	As Req	3/4" PVC Pipe			
8	1	3/4" x 1/2" Reducing Union	Swagelok	SS-1210-6-8	
9	3	1/2" 40 Series Ball Valve, SST	Swagelok	SS-45S8	
10	As Req	1/2" Tubing, 316 SST	Swagelok	SS-T8-S065-20	
11	3	1/2" Compression x 1/2" Compression 90-DEG Elbow	Swagelok	SS-810-9	
12	2	1/2" Compression x 1/2" Compression x 1/2" Compression Tee	Spears	SS-810-3	
13	1	1/2" x 1/4" Tube Fitting, Bulkhead Reducing	Swagelok	SS-810-61-4	
14	2	1/2" Male Fitting x 1/2" MNPT	Swagelok	SS-810-1-8BT	
15	1	1" (Soc) x 1" MNPT Adapter	Spears		
16	As Req	2" PVC Pipe (Drain) Sch 80	Spears		
17	1	2" Cap	Spears		
18	1	1" Female NPT x 1" Male NPT 90 Deg Elbow	Swagelok	SS-16-SE	
19	1	1" Female Tube Connector x 1" Female NPT	Swagelok	SS-1610-7-16	
20	1	1" x 3/4" Reducing Union	Swagelok	SS-1610-6-8	
21	1	1/2" Compression x 1/2 Female NPT Connector (Sample Tap)	Swagelok	SS-810-7-8	
22	1	3/4" Tank Adapter (Inlet) Sch 80 PVC	Spears		
23	1	2" Tank Adapter (Outlet) Sch 80 PVC	Spears		
24	1	PVC Bulkhead Fitting 1"	Hayward	BFA1010TEL	
25	1	Female Tube Adapter, 3/4 in. Tube OD x 3/4 in. Female NPT	Swagelok	SS-12-TA-7-12	
26	As Req	Flexible Non-Metallic Liquid Tight Conduit			

NAMEPLATE SCHEDULE

Item	Line 1	Line 2	Line 3	Nameplate Size	Letter Size
A	ACP-900-100-01	TANK T3	CHLORINE ANALYZER PANEL	6" x 2"	5/16"

RECLAMATION
Managing Water in the West

ch2m

VERIFY SCALE
BAR IS ONE INCH ON ORIGINAL DRAWING.
0 1"

ALWAYS THINK SAFETY

U.S. DEPARTMENT OF THE INTERIOR
BUREAU OF RECLAMATION
NAVAJO-GALLUP WATER SUPPLY PROJECT
NEW MEXICO

CUTTER LATERAL - REACH 21

WATER TREATMENT PLANT

NO.	DATE	REVISION	BY	APVD
0	02/13/2019	ISSUED FOR CONSTRUCTION	MK	JP

D THOMAS
DESIGNED
S FLASKA
DRAWN
A ELLIS
CHECKED
J LANDMAN
TECH. APPR.
J PETERSON
APPROVED
ADMIN APPROVAL -

FARMINGTON, NM FEBRUARY 2019

JAMES K. LANDMAN
NEW MEXICO
14436
2/13/19
PROFESSIONAL ENGINEER

TANK 3 SUPPLY FACILITY

TYPICAL
ANALYZER PANEL
CL2

900-I-0002

SHEET 405 OF 405

DATE PLOTTED 1/29/2019
TIME PLOTTED 9:43:33 PM
CAD SYSTEM
CAD FILENAME 900-I-0002_s82833.dgn