GENERAL

PLATE	DRAWING NO.	CONTENT	DETAIL
1	1695-D-60396	DRAWING INDEX	SHEET 1
2	1695-D-60397	DRAWING INDEX	SHEET 2
3	1695-529-60222	GENERAL MAP	
4	1695-529-60146	LOCATION MAP	
5	1695-D-60398	KEY MAP, VICINITY MAP, AND AREA MAPS	
6	1695-D-60399	STRUCTURAL DESIGN DATA	GENERAL
7	1695-D-60400	STRUCTURAL DESIGN DATA	LOADS
8	1695-D-60401	SPECIAL INSPECTIONS	SHEET 1 OF 2
9	1695-D-60402	SPECIAL INSPECTIONS	SHEET 2 OF 2
10	1695-D-60403	PUMPING PLANT NO. 4 SITE AND GRADING PLAN	PLAN
11	1695-D-60404	PUMPING PLANT NO. 4 SITE AND GRADING PLAN	SECTIONS
12	1695-D-60406	PUMPING PLANT NO. 7 SITE AND GRADING PLAN	PLAN
13	1695-D-60407	PUMPING PLANT NO. 7 SITE AND GRADING PLAN	SECTIONS

CIVIL

PLATE	DRAWING NO.	CONTENT	DETAIL
14	1695-D-60405	PUMPING PLANT NO. 4 SERVICE YARD SURFACING	PLAN AND DETAILS
15	1695-D-60408	PUMPING PLANT NO. 7 SERVICE YARD SURFACING	PLAN AND DETAILS
16	1695-D-60409	STRUCTURAL EXCAVATION AND BACKFILL	TYPICAL SECTIONS
17	1695-D-60410	STRUCTURAL AND PIPE TRENCH EXCAVATION AND BACKFILL	TYPICAL SECTIONS
18	1695-D-60466	PUMPING PLANT NO. 4 ACCESS ROAD	PLAN, PROFILE, AND SECTION
19	1695-D-60467	PUMPING PLANT NO. 7 ACCESS ROAD	PLAN, PROFILE, AND SECTION

ARCHITECTURAL

PLATE	DRAWING NO.	CONTENT	DETAIL
20	1695-D-60366	ARCHITECTURAL	GENERAL NOTES, SYMBOLS, AND ABBREVIATIONS
21	1695-D-60367	PUMPING PLANT ARCHITECTURAL	BUILDING CODE SUMMARY AND LIFE SAFETY PLAN
22	1695-D-60368	PUMPING PLANT ARCHITECTURAL	FLOOR PLAN
23	1695-D-60369	PUMPING PLANT ARCHITECTURAL	ROOF PLAN
24	1695-D-60370	PUMPING PLANT ARCHITECTURAL	EXTERIOR ELEVATIONS
25	1695-D-60371	PUMPING PLANT ARCHITECTURAL	BUILDING SECTIONS
26	1695-D-60372	PUMPING PLANT ARCHITECTURAL	BUILDING SECTIONS
27	1695-D-60373	PUMPING PLANT ARCHITECTURAL	CONTROL ROOM - PLAN, ROOF PLAN, AND INTERIOR ELEVATIONS
28	1695-D-60374	PUMPING PLANT AND CHEMICAL BUILDING ARCHITECTURAL	DOOR, WINDOW, AND LOUVER SCHEDULES AND DETAILS
29	1695-D-60375	PUMPING PLANT AND CHEMICAL BUILDING ARCHITECTURAL	SIGN SCHEDULE AND DETAILS
30	1695-D-60376	PUMPING PLANT AND CHEMICAL BUILDING ARCHITECTURAL	WALL SECTIONS
31	1695-D-60377	PUMPING PLANT AND CHEMICAL BUILDING ARCHITECTURAL	ROOF DETAILS
32	1695-D-60378	PUMPING PLANT AND CHEMICAL BUILDING ARCHITECTURAL	DETAILS
33	1695-D-60379	PUMPING PLANT AND CHEMICAL BUILDING ARCHITECTURAL	DETAILS
34	1695-D-60386	CHEMICAL BUILDING ARCHITECTURAL	BUILDING CODE SUMMARY, LIFE SAFETY PLAN, FLOOR PLAN, AND ROOF PLAN
35	1695-D-60387	CHEMICAL BUILDING ARCHITECTURAL	EXTERIOR ELEVATIONS
36	1695-D-60388	CHEMICAL BUILDING ARCHITECTURAL	BUILDING SECTIONS
37	1695-D-60380	TURNOUT BUILDING ARCHITECTURAL	BUILDING CODE SUMMARY, LIFE SAFETY PLAN, FLOOR PLAN, AND ROOF PLAN
38	1695-D-60381	TURNOUT BUILDING ARCHITECTURAL	EXTERIOR ELEVATIONS AND BUILDING SECTIONS
39	1695-D-60382	TURNOUT BUILDING ARCHITECTURAL	DETAILS
40	1695-D-60383	TURNOUT BUILDING ARCHITECTURAL	DOOR AND SIGN SCHEDULES AND DETAILS

STRUCTURAL

PLATE	DRAWING NO.	CONTENT	DETAIL
41	1695-D-60411	PUMPING PLANT GENERAL ARRANGEMENT	PLAN
42	1695-D-60412	PUMPING PLANT GENERAL ARRANGEMENT	SECTIONS
43	1695-D-60413	PUMPING PLANT GENERAL ARRANGEMENT	SECTIONS
44	1695-D-60414	PUMPING PLANT CONCRETE OUTLINE	PLAN
45	1695-D-60415	PUMPING PLANT CONCRETE OUTLINE	SECTIONS
46	1695-D-60416	PUMPING PLANT CONCRETE OUTLINE	SECTIONS
47	1695-D-60417	PUMPING PLANT CONCRETE OUTLINE	SECTIONS AND DETAILS

STRUCTURAL

PLATE	DRAWING NO.	CONTENT	DETAIL
48	1695-D-60418	PUMPING PLANT REINFORCEMENT DESIGN	PLAN
49	1695-D-60419	PUMPING PLANT REINFORCEMENT DESIGN	SECTIONS
50	1695-D-60420	PUMPING PLANT REINFORCEMENT DESIGN	SECTIONS
51	1695-D-60421	PUMPING PLANT REINFORCEMENT DESIGN	SECTIONS AND DETAILS
52	1695-D-60422	MASONRY	GENERAL NOTES AND TYPICAL DETAILS
53	1695-D-60423	PUMPING PLANT MASONRY	PLAN
54	1695-D-60424	PUMPING PLANT MASONRY	PLAN
55	1695-D-60425	PUMPING PLANT MASONRY	ELEVATIONS
56	1695-D-60426	PUMPING PLANT MASONRY	ELEVATIONS
57	1695-D-60427	PUMPING PLANT MASONRY	ELEVATIONS
58	1695-D-60428	CHEMICAL BUILDING GENERAL ARRANGMENT	PLAN AND SECTIONS
59	1695-D-60429	CHEMICAL BUILDING CONCRETE OUTLINE	PLAN
60	1695-D-60430	CHEMICAL BUILDING CONCRETE OUTLINE	SECTIONS
61	1695-D-60431	CHEMICAL BUILDING REINFORCEMENT DESIGN	PLAN
62	1695-D-60432	CHEMICAL BUILDING REINFORCEMENT DESIGN	SECTIONS
63	1695-D-60433	CHEMICAL BUILDING REINFORCEMENT DESIGN	DETAILS
64	1695-D-60434	CHEMICAL BUILDING MASONRY	PLAN AND ELEVATIONS
65	1695-D-60435	TURNOUT BUILDING GENERAL ARRANGEMENT	PLAN AND SECTIONS
66	1695-D-60384	TURNOUT BUILDING CONCRETE OUTLINE AND REINFORCEMENT DESIGN	PLAN, SECTIONS, AND DETAILS
67	1695-D-60385	TURNOUT BUILDING STRUCTURAL STEEL ROOF FRAMING	PLAN, SECTIONS, AND DETAILS
68	1695-D-60449	TURNOUT BUILDING MASONRY	PLAN AND ELEVATIONS
69	1695-D-60440	EQUIPMENT FOUNDATION AND ENCLOSURE	HVAC UNITS
70	1695-D-60441	EQUIPMENT FOUNDATION AND ENCLOSURE	ENGINE-GENERATOR SET AND SWITCHGEAR
71	1695-D-60446	PUMPING PLANT NO. 4 BURIED THRUST BLOCK	PARTIAL PLAN
72	1695-D-60447	PUMPING PLANT NOS. 4 AND 7 BURIED THRUST BLOCKS	CONCRETE OUTLINE AND REINFORCEMENT DESIGN
73	1695-D-60448	PUMPING PLANT NO. 7 BURIED THRUST BLOCKS	CONCRETE OUTLINE AND REINFORCEMENT DESIGN

PRECAST CONCRETE STRUCTURES

PLATE	DRAWING NO.	CONTENT	DETAIL
74	1695-D-60437	PUMPING PLANT NO. 4 PRECAST CONCRETE TANK OVERFLOW AND DRAIN VAULT	PLAN AND SECTIONS
75	1695-D-60438	PUMPING PLANT NO. 4 PRECAST CONCRETE UTILITY VAULT	PLAN AND SECTIONS
76	1695-D-60436	PRECAST CONCRETE MANHOLES	PLAN AND SECTIONS
77	1695-D-60439	PRECAST CONCRETE STRUCTURE BATTEN	ELEVATION AND SECTION
78	1695-D-60486	PRECAST CONCRETE BLOWOFF ENCLOSURE	PLAN AND SECTIONS

PIPING AND INSTRUMENTATION DIAGRAM

PLATE	DRAWING NO.	CONTENT	DETAIL
86	1695-D-60505	P&ID	PUMPING PLANT SYMBOLS & ABBREVIATIONS
87	1695-D-60506	P&ID	PUMPING PLANT SYMBOLS & ABBREVIATIONS
88	1695-D-60507	P&ID	PUMPING PLANT NO. 4: TANK YARD
89	1695-D-60508	P&ID	PUMPING PLANT NO. 4: UNIT 1 AND UNIT 2
90	1695-D-60509	P&ID	PUMPING PLANT NO. 4: UNIT 3 AND UNIT 4
91	1695-D-60510	P&ID	PUMPING PLANT NO. 4: DISCHARGE HEADER
92	1695-D-60511	P&ID	PUMPING PLANT NO. 4: AIR CHAMBERS
93	1695-D-60512	P&ID	PUMPING PLANT NO. 4: CHLORINE SAMPLE SYSTEM
94	1695-D-60513	P&ID	PUMPING PLANT NO. 4: SODIUM HYPOCHLORITE FEED SYSTEM
95	1695-D-60514	P&ID	PUMPING PLANT NO. 4: EMERGENCY SHOWER SUPPLY
96	1695-D-60515	P&ID	PUMPING PLANT NO. 4: TURNOUT BUILDING
97	1695-D-60516	P&ID	PUMPING PLANT NO. 7: TANK YARD
98	1695-D-60517	P&ID	PUMPING PLANT NO. 7: UNIT 1 AND UNIT 2
99	1695-D-60518	P&ID	PUMPING PLANT NO. 7: UNIT 3 AND UNIT 4
100	1695-D-60519	P&ID	PUMPING PLANT NO. 7: DISCHARGE HEADER
101	1695-D-60520	P&ID	PUMPING PLANT NO. 7: AIR CHAMBERS
102	1695-D-60521	P&ID	PUMPING PLANT NO. 7: TURNOUT BUILDING

PIPELINE

PLATE	DRAWING NO.	CONTENT	DETAIL
79	1695-D-60704	PLAN AND PROFILE	STA. 7400+00 TO END
80	1695-D-60732	PLAN AND PROFILE	PUMPING PLANT 4 DRAIN
81	1695-D-60715	PRESSURE PIPE TRENCH INSTALLATION	NATIVE MATERIAL SECTIONS AND DETAILS
82	1695-D-60767	PLAN AND PROFILE	TEMPORARY 6-INCH CONSTRUCTION WATER LINE
83	1695-D-60768	THRUST RESTRAINT TABLES	SECTIONS AND DETAILS
84	1695-D-60525	TEMPORARY CONSTRUCTION WATER LINE	SECTIONS AND DETAILS
85	1695-D-60770	BAFFLED OUTLET STRUCTURE CONCRETE OUTLINE AND REINFORCEMENT	PLAN AND SECTIONS

MECHANICAL - STEEL MANIFOLDS

PLATE	DRAWING NO.	CONTENT	DETAIL
103	1695-D-60595	PUMPING PLANT NO. 4 STEEL MANIFOLD AND STORAGE TANK	PLAN
104	1695-D-60596	PUMPING PLANT NO. 4 STEEL MANIFOLD	PLAN AND SECTIONS
105	1695-D-60597	PUMPING PLANT NO. 4 STEEL MANIFOLD	PLAN AND SECTIONS
106	1695-D-60598	PUMPING PLANT NO. 4 STEEL MANIFOLD	SECTIONS
107	1695-D-60599	STEEL MANIFOLD	SECTIONS AND DETAILS
108	1695-D-60600	PUMPING PLANT NO. 7 STEEL MANIFOLD AND STORAGE TANK	PLAN
109	1695-D-60601	PUMPING PLANT NO. 7 STEEL MANIFOLD	PLAN AND SECTIONS
110	1695-D-60602	PUMPING PLANT NO. 7 STEEL MANIFOLD	PLAN AND SECTION
111	1695-D-60603	PUMPING PLANT NO. 7 STEEL MANIFOLD	SECTION
112	1695-D-60395	STEEL MANIFOLD - PUMPING PLANT NO. 7 BLOWOFF	PLAN - SECTIONS AND DETAILS
113	1695-D-60604	STEEL MANIFOLD	SECTIONS AND DETAILS
114	1695-D-60605	STEEL MANIFOLD	SECTIONS AND DETAILS
115	1695-D-60606	STEEL MANIFOLD	SECTIONS AND DETAILS
116	1695-D-60607	STEEL MANIFOLD	SECTION AND DETAILS
117	1695-D-60608	STEEL MANIFOLD	SECTION AND DETAILS
118	1695-D-60609	STEEL MANIFOLD	SECTION AND DETAILS
119	1695-D-60610	AIR CHAMBERS	PLAN AND SECTIONS
120	1695-D-60611	AIR CHAMBERS	SECTIONS AND DETAILS
121	1695-D-60612	AIR CHAMBERS COMPRESSOR AND AIR EQUALIZATION PIPING	PLAN, SECTIONS AND DETAILS
122	1695-D-60613	AIR CHAMBERS COMPRESSOR AND AIR EQUALIZATION PIPING	SECTIONS AND DETAILS
123	1695-D-60614	AIR CHAMBERS	PLAN, SECTIONS AND DETAIL
124	1695-D-60621	STEEL MANIFOLD	SECTIONS AND DETAILS
125	1695-D-60504	TEMPORARY CONSTRUCTION WATER LINE	SECTIONS AND DETAILS
126	1695-D-60524	TEMPORARY CONSTRUCTION WATER LINE	SECTIONS AND DETAILS
127	1695-D-60389	TOHATCHI TURNOUT BUILDING	PIPING AND VALVES PLAN
128	1695-D-60390	TOHATCHI TURNOUT BUILDING	PIPING AND VALVES SECTION
129	1695-D-60391	SHEEP SPRINGS TURNOUT BUILDING	PIPING AND VALVES PLAN
130	1695-D-60392	SHEEP SPRINGS TURNOUT BUILDING	PIPING AND VALVES SECTION
131	1695-D-60393	TURNOUT BUILDINGS	PIPING AND VALVES SECTIONS AND DETAILS
132	1695-D-60394	TURNOUT BUILDINGS	PIPING AND VALVES DETAILS

MECHANICAL - HEATING, VENTILATING AND AIR CONDITIONING

PLATE	DRAWING NO.	CONTENT	DETAIL
133	1695-D-60493	HVAC	COVER SHEET
134	1695-D-60494	HVAC	SCHEDULES
135	1695-D-60495	HVAC	PUMPING PLANT - PLAN
136	1695-D-60496	HVAC	PUMPING PLANT- SECTIONS
137	1695-D-60497	HVAC	PUMPING PLANT NO. 4: CHEMICAL BUILDING AND VAULT- PLAN AND SECTIONS
138	1695-D-60498	TURNOUT BUILDING	HVAC PLAN
139	1695-D-60499	HVAC	SEQUENCE OF OPERATIONS
140	1695-D-60500	HVAC	DETAILS

RECLAMATION
Managing Water in the West

ALWAYS THINK **SAFETY**

U.S. DEPARTMENT OF THE INTERIOR
BUREAU OF RECLAMATION

NAVAJO GALLUP WATER SUPPLY PROJECT
NEW MEXICO

SAN JUAN LATERAL
PUMPING PLANT NOS. 4 AND 7

Brandon Jackson
DESIGNED
Brandon Jackson
DRAWN
Kevin O'Shea
CHECKED
TECH. APPR. Kevin O'Shea, P.E.
APPROVED Alfred I. Bernstein
Peer Reviewer - Plant Structures Group

DENVER, CO 2020-01-24

DRAWING INDEX

SHEET 1

1695-D-60396

MECHANICAL - MISCELLANEOUS

PLATE	DRAWING NO.	CONTENT	DETAIL
141	1695-D-60485	PLUMBING	COVER SHEET
142	1695-D-60489	PLUMBING	GRAVITY DRAINAGE PLAN
143	1695-D-60490	PLUMBING	GRAVITY DRAINAGE - SECTION AND DETAILS
144	1695-D-60502	PLUMBING	MAIN SUMP PUMP DISCHARGE PIPE
145	1695-D-60487	PLUMBING	PUMPING PLANT NO. 4: CHEMICAL BUILDING SERVICE WATER SYSTEM - PLAN AND SECTIONS
146	1695-D-60501	PLUMBING	PUMPING PLANT NO. 4: CHEMICAL BUILDING SAFETY SHOWER SUMP SYSTEM - PLAN AND SECTIONS
147	1695-D-60622	WATER STORAGE TANKS - WATER QUALITY SAMPLING SYSTEM	PLAN, SECTIONS AND DETAILS
148	1695-D-60623	WATER STORAGE TANKS - WATER QUALITY SAMPLING SYSTEM	PLAN, SECTIONS AND DETAILS
149	1695-D-60624	WATER STORAGE TANKS - WATER QUALITY SAMPLING SYSTEM	SECTIONS AND DETAILS
150	1695-D-60503	TURNOUT BUILDING PLUMBING	GRAVITY DRAINAGE AND SUMP - PLANS, SECTIONS AND DETAIL
151	1695-D-60491	PUMPING PLANT NO. 4 ENGINE GENERATOR SET	LAYOUT
152	1695-D-60492	PUMPING PLANT NO. 7 ENGINE GENERATOR SET	LAYOUT

MECHANICAL - CHLORINATION SYSTEM

PLATE	DRAWING NO.	CONTENT	DETAIL
153	1695-D-60472	PUMPING PLANT NO. 4 CHLORINATION SYSTEM	PIPE SCHEDULE
154	1695-D-60473	PUMPING PLANT NO. 4 CHLORINATION SYSTEM	PLAN
155	1695-D-60474	PUMPING PLANT NO. 4 CHLORINATION SYSTEM	SECTIONS
156	1695-D-60475	PUMPING PLANT NO. 4 CHLORINATION SYSTEM	SECTIONS
157	1695-D-60476	PUMPING PLANT NO. 4 CHLORINATION SYSTEM	YARD PIPING - PLAN AND SECTIONS

WATER STORAGE TANKS

PLATE	DRAWING NO.	CONTENT	DETAIL
158	1695-D-60442	PUMPING PLANT NO. 4 1.0-MGAL CONCRETE WATER STORAGE TANK	PLAN AND SECTIONS
159	1695-D-60443	PUMPING PLANT NO. 7 1.5-MGAL CONCRETE WATER STORAGE TANK	PLAN AND SECTIONS
160	1695-D-60444	CONCRETE WATER STORAGE TANK FOUNDATION DRAIN	SECTIONS AND DETAILS
161	1695-D-60445	PUMPING PLANT NO. 7 TANK OVERFLOW AND DRAIN APRON	PLAN AND SECTIONS
162	1695-D-60615	PUMPING PLANT NO. 4 1.0-MGAL WELDED STEEL WATER STORAGE TANK	PLAN AND SECTIONS
163	1695-D-60616	PUMPING PLANT NO. 4 WATER STORAGE TANK OVERFLOW PIPIE	SECTIONS AND DETAILS
164	1695-D-60617	PUMPING PLANT NO. 7 1.5-MGAL WELDED STEEL WATER STORAGE TANK	PLAN AND SECTION
165	1695-D-60618	WELDED STEEL TANK	SECTIONS AND DETAILS
166	1695-D-60619	WELDED STEEL TANK	SECTIONS AND DETAIL
167	1695-D-60620	WELDED STEEL TANK	SECTIONS AND DETAILS

ELECTRICAL

PLATE	DRAWING NO.	CONTENT	DETAIL
168	1695-D-60527	SCADA	SCADA AND NETWORK OVERVIEW
169	1695-D-60528	SCADA	TELEPHONE
170	1695-D-60529	SCADA	SECURITY AND SURVEILANCE SYSTEM
171	1695-D-60530	SCADA	MODBUS SERIAL COMMUNICATION CONNECTION DIAGRAM
172	1695-D-60531	ELECTRICAL INSTALLATION	SYMBOLS AND DESIGNATIONS
173	1695-D-60532	ELECTRICAL INSTALLATION	PUMPING PLANT NO. 4 SINGLE LINE DIAGRAM
174	1695-D-60533	ELECTRICAL INSTALLATION	PUMPING PLANT NO. 4 480 VOLT SWITCHBOARD SCHEDULES
175	1695-D-60534	ELECTRICAL INSTALLATION	PUMPING PLANT NO. 4 LIGHTING AND PANELBOARD SCHEDULES
176	1695-D-60535	ELECTRICAL INSTALLATION	PUMPING PLANT NO. 4 CHEMICAL BUILDING PANELBOARD SCHEDULES
177	1695-D-60536	ELECTRICAL INSTALLATION	TURNOUT BUIDING DISTRIBUTION PANELBOARDS SCHEDULE
178	1695-D-60537	ELECTRICAL INSTALLATION	PUMPING PLANT NO. 7 SINGLE LINE DIAGRAM

ELECTRICAL

PLATE	DRAWING NO.	CONTENT	DETAIL
179	1695-D-60538	ELECTRICAL INSTALLATION	PUMPNIG PLANT NO. 7 480 VOLT SWITCHBOARD SCHEDULES
180	1695-D-60539	ELECTRICAL INSTALLATION	PUMPING PLANT NO. 7 LIGHTING AND PANELBOARD SCHEDULES
181	1695-D-60540	ELECTRICAL INSTALLATION	UNIT CONTROLS SCHEMATIC DIAGRAM
182	1695-D-60541	ELECTRICAL INSTALLATION	LIGHTING CONTROL SCHEMATIC
183	1695-D-60542	ELECTRICAL INSTALLATION	EMERGENCY SHOWER PUMP CONTROL SCHEMATIC DIAGRAM
184	1695-D-60543	ELECTRICAL INSTALLATION	ELECTRICAL PLAN - PUMPING PLANT NO. 4 SITE
185	1695-D-60544	ELECTRICAL INSTALLATION	ELECTRICAL PLAN - PUMPING PLANT NO. 7 SITE
186	1695-D-60545	ELECTRICAL INSTALLATION	GROUNDING PLAN - PUMPING PLANT NO. 4 SITE
187	1695-D-60546	ELECTRICAL INSTALLATION	GROUNDING PLAN - PUMPING PLANT NO. 7 SITE
188	1695-D-60547	ELECTRICAL INSTALLATION	GROUNDING PLAN - PUMPING PLANT BUILDING
189	1695-D-60548	ELECTRICAL INSTALLATION	GROUNDING PLAN - TAP STRUCTURE, UNIT SUBSTATION AND TURNOUT BUILDING
190	1695-D-60549	ELECTRICAL INSTALLATION	GROUNDING PLAN - PUMPING PLANT NO. 4 STORAGE TANK AND CHEMICAL BUILDING
191	1695-D-60550	ELECTRICAL INSTALLATION	GROUNDING PLAN - PUMPING PLANT NO. 7 STORAGE TANK
192	1695-D-60551	ELECTRICAL INSTALLATION	CONDUIT PLAN - PUMPING PLANT NO. 4 SITE
193	1695-D-60552	ELECTRICAL INSTALLATION	CONDUIT PLAN - PUMPING PLANT NO. 7 SITE
194	1695-D-60553	ELECTRICAL INSTALLATION	CONDUIT PLAN - PUMPING PLANT BUILDING
195	1695-D-60554	ELECTRICAL INSTALLATION	CONDUIT PLAN AND SECTION - PUMPING PLANT BUILDING
196	1695-D-60555	ELECTRICAL INSTALLATION	CONDUIT SECTIONS - UNIT PIPING AND AIR CHAMBER EQUIPMENT
197	1695-D-60556	ELECTRICAL INSTALLATION	CONDUIT PLAN AND SECTIONS - PUMP ROOM
198	1695-D-60557	ELECTRICAL INSTALLATION	CONDUIT SECTIONS - PUMP ROOM AND AIR CHAMBER ROOM
199	1695-D-60558	ELECTRICAL INSTALLATION	CONDUIT SECTIONS - PUMPING PLANT BUILDING
200	1695-D-60559	ELECTRICAL INSTALLATION	CONDUIT PLAN, SECTIONS, AND ELEVATIONS - TURNOUT BUILDING
201	1695-D-60560	ELECTRICAL INSTALLATION	CONDUIT SECTIONS AND ELEVATIONS - PUMPING PLANT NO. 4 SITE
202	1695-D-60561	ELECTRICAL INSTALLATION	CONDUIT PLAN AND SECTION - PUMPING PLANT NO. 4 CHEMICAL BUILDING
203	1695-D-60562	ELECTRICAL INSTALLATION	CONDUIT ELEVATIONS - PUMPING PLANT NO. 4 CHEMICAL BUILDING
204	1695-D-60563	ELECTRICAL INSTALLATION	CONDUIT PLAN AND SECTION - PUMPING PLANT NO. 4 S0501-TK-001
205	1695-D-60564	ELECTRICAL INSTALLATION	CONDUIT PLAN AND SECTION - PUMPING PLANT NO. 7 S0601-TK-001
206	1695-D-60565	ELECTRICAL INSTALLATION	CABLE & CONDUIT SCHEDULE - PUMPING PLANT NO. 4 PLANT YARD
207	1695-D-60566	ELECTRICAL INSTALLATION	CABLE & CONDUIT SCHEDULE - PUMPING PLANT NO. 7 PLANT YARD
208	1695-D-60567	ELECTRICAL INSTALLATION	CABLE AND CONDUIT SCHEDULE - PUMP ROOM
209	1695-D-60568	ELECTRICAL INSTALLATION	CABLE & CONDUIT SCHEDULE - AIR CHAMBER ROOM AND TURNOUT BLDG
210	1695-D-60569	ELECTRICAL INSTALLATION	CABLE & CONDUIT SCHEDULE - CHEMICAL BUILDING
211	1695-D-60570	ELECTRICAL INSTALLATION	CABLE TRAY PLAN - INSTRUMENTATION
212	1695-D-60571	ELECTRICAL INSTALLATION	CABLE TRAY PLAN - POWER
213	1695-D-60572	ELECTRICAL INSTALLATION	CABLE TRAY SECTIONS - LONGITUDINAL
214	1695-D-60573	ELECTRICAL INSTALLATION	CABLE TRAY TRANSVERSE SECTIONS
215	1695-D-60574	ELECTRICAL INSTALLATION	CABLE TRAY SCHEDULE - PUMP UNITS
216	1695-D-60575	ELECTRICAL INSTALLATION	CABLE TRAY SCHEDULE - PUMPING PLANT NO. 4 POWER
217	1695-D-60576	ELECTRICAL INSTALLATION	CABLE TRAY SCHEDULE - PUMPING PLANT NO. 4 INSTRUMENTATION
218	1695-D-60577	ELECTRICAL INSTALLATION	CABLE TRAY SCHEDULE - PUMPING PLANT NO. 7 POWER
219	1695-D-60578	ELECTRICAL INSTALLATION	CABLE TRAY SCHEDULE - PUMPING PLANT NO. 7 INSTRUMENTATION
220	1695-D-60579	ELECTRICAL INSTALLATION	WIREWAY PLAN AND SCHEDULE - CHEMICAL BUILDING POWER
221	1695-D-60580	ELECTRICAL INSTALLATION	WIREWAY PLAN AND SCHEDULE - CHEMICAL BUILDING INSTRUMENTATION
222	1695-D-60581	ELECTRICAL INSTALLATION	LIGHTING PLAN - PUMPING PLANT INTERIOR
223	1695-D-60582	ELECTRICAL INSTALLATION	LIGHTING PLAN - PUMPING PLANT EXTERIOR
224	1695-D-60583	ELECTRICAL INSTALLATION	WIRING DEVICE PLAN - PUMPING PLANT
225	1695-D-60584	ELECTRICAL INSTALLATION	LIGHTING SECTIONS - PUMPING PLANT INTERIOR LIGHTING AND WIRING DEVICES
226	1695-D-60585	ELECTRICAL INSTALLATION	LIGHTING SECTIONS - PUMPING PLANT INTERIOR LIGHTING AND WIRING DEVICES

ELECTRICAL

PLATE	DRAWING NO.	CONTENT	DETAIL
227	1695-D-60586	ELECTRICAL INSTALLATION	LIGHTING SECTIONS - PUMPING PLANT INTERIOR
228	1695-D-60587	ELECTRICAL INSTALLATION	LIGHTING SECTIONS - PUMPING PLANT EXTERIOR
229	1695-D-60588	ELECTRICAL INSTALLATION	LIGHTING SECTIONS - PUMPING PLANT EXTERIOR
230	1695-D-60589	ELECTRICAL INSTALLATION	TURNOUT BUILDING LIGHTING - PLAN AND ELEVATIONS
231	1695-D-60590	ELECTRICAL INSTALLATION	TURNOUT BUILDING LIGHTING - SECTIONS AND SCHEDULE
232	1695-D-60591	ELECTRICAL INSTALLATION	LIGHTING AND WIRING DEVICE PLAN - PUMPING PLANT NO. 4 CHEMICAL BUILDING
233	1695-D-60592	ELECTRICAL INSTALLATION	LIGHTING SECTIONS - PUMPING PLANT NO. 4 CHEMICAL BUILDING EXTERIOR
234	1695-D-60593	ELECTRICAL INSTALLATION	LIGHTING ELEVATIONS - PUMPING PLANT NO. 4 CHEMICAL BUILDING INTERIOR

CATHODIC PROTECTION

PLATE	DRAWING NO.	CONTENT	DETAIL
235	1695-D-60640	PUMPING PLANT NO. 4 CATHODIC PROTECTION SYSTEM	WELDED WATER STORAGE TANK - PLAN
236	1695-D-60641	PUMPING PLANT NO. 4 CATHODIC PROTECTION SYSTEM	WELDED WATER STORAGE TANK - PROFILE
237	1695-D-60647	PUMPING PLANT NO. 4 CATHODIC PROTECTION SYSTEM	AIR CHAMBER PLAN AND PROFILE
238	1695-D-60642	PUMPING PLANT NO. 7 CATHODIC PROTECTION SYSTEM	WELDED WATER STORAGE TANK - PLAN
239	1695-D-60643	PUMPING PLANT NO. 7 CATHODIC PROTECTION SYSTEM	WELDED WATER STORAGE TANK - PROFILE
240	1695-D-60648	PUMPING PLANT NO. 7 CATHODIC PROTECTION SYSTEM	AIR CHAMBER PLAN AND PROFILE
241	1695-D-60644	CATHODIC PROTECTION SYSTEM	STORAGE TANK AND AIR CHAMBER DETAILS
242	1695-D-60649	GALVANIC ANODE CATHODIC PROTECTION	PUMPING PLANT TURNOUT PIPE
243	1695-D-60646	CORROSION MONITORING	PUMPING PLANT YARD PIPING
244	1695-D-60645	CORROSION MONITORING	PUMPING PLANT YARD PIPING DETAILS

STANDARD DRAWINGS

PLATE	DRAWING NO.	CONTENT	DETAILS
245	40-D-4334	Electrical Installation	Typical Grounding Details – Sheet 1 of 2
246	40-D-4335	Electrical Installation	Typical Grounding Details – Sheet 2 of 2
247	40-D-4753	Electrical Installation	Typical Grounding Details for Switchyards and Substations
248	40-D-5246	Method of Building Forms for Successive Lifts	
249	40-D-5247	Buildings	Joints in Concrete Structures
250	40-D-5248	Buildings	Stub Wall Construction Joints
251	40-D-5249	Construction Joint Keys	
252	40-D-5328	Pipe Supports	
253	40-D-5599	Small Equipment Foundations	
254	40-D-6032	Induction Motors	Design and Nameplate Data to be Furnished by the Contractor
255	40-D-6137	Manholes	
256	40-D-6234	Standard Nameplates	
257	40-D-6376	Fencing Within Right-Of-Way	Typical Grounding Detials
258	40-D-6592	Top Mounted Pipe Guardrails	
259	40-D-6601	Miscellaneous Metalwork	Ladder – Type 2
260	40-D-6743	Miscellaneous Metalwork	Concrete Structures – Pullboxes – Outline and Reinforcement Design
261	40-D-7016	Chain Link Fencing	Chain Link Fencing Requirements – Soil Installation
262	40-D-7018	Flange Support	
263	40-D-7102	Government Drawing Format	Drawing Boarder, Sample Title Block, and Signature Lines
264	40-D-60001	Electrical Equipment Support	
265	40-D-60002	Typical Guard Posts	Non-Security Application
266	40-D-60003	General Notes for Concrete Outline and Reinforcement	
267	40-D-60004	Minimum Requirements for Detailing Reinforcement	
268	104-D-254	Typical Powerplant/Pumping Plant – Electrical Installation	Main Control Board CSA – Panel 7R – Wiring Diagram
269	104-D-757	Box Termination	

INFORMATIONAL DRAWINGS

PLATE	DRAWING NO.	CONTENT	DETAILS
270	1695-D-60308	Reach 10: PLAN AND PROFILE	TEMPORARY 6-INCH CONSTRUCTION WATER LINE
271	1695-D-60309	Reach 11: PLAN AND PROFILE	BEGINNING TO STA. 11100+00
272	1695-D-60677	Block 4C-8: SHEET KEY	NOTES AND SYMBOLS
273	1695-D-60703	Block 4C-8: PLAN AND PROFILE	STA. 7350+00 TO END
274	1695-D-60705	Block 4C-8: PPLAN AND PROFILE	BEGINNING TO STA. 8050+00
275	1695-D-60722	Block 4C-8: AIR VALVES AND MANHOLES	SECTIONS AND DETAILS
276	1695-D-60731	Block 4C-8: PRECAST CONCRETE MANHOLES	PLANS, SECTIONS AND DETAILS
277	1695-D-60733	Block 4C-8: TYPICAL ROAD CROSSING	OPEN CUT SECTIONS

RECLAMATION
Managing Water in the West

ALWAYS THINK **SAFETY**

U.S. DEPARTMENT OF THE INTERIOR
BUREAU OF RECLAMATION
NAVAJO GALLUP WATER SUPPLY PROJECT
NEW MEXICO

SAN JUAN LATERAL
PUMPING PLANY NOS. 4 AND 7

Brandon Jackson
DESIGNED
Brandon Jackson
DRAWN
Kevin O'Shea
CHECKED
TECH. APPR. Kevin O'Shea, P.E.
APPROVED Alfred I. Bernstein
Peer Reviewer - Plant Structures Group

DENVER, CO 2020-01-24

DRAWING INDEX

SHEET 2

1695-D-60397

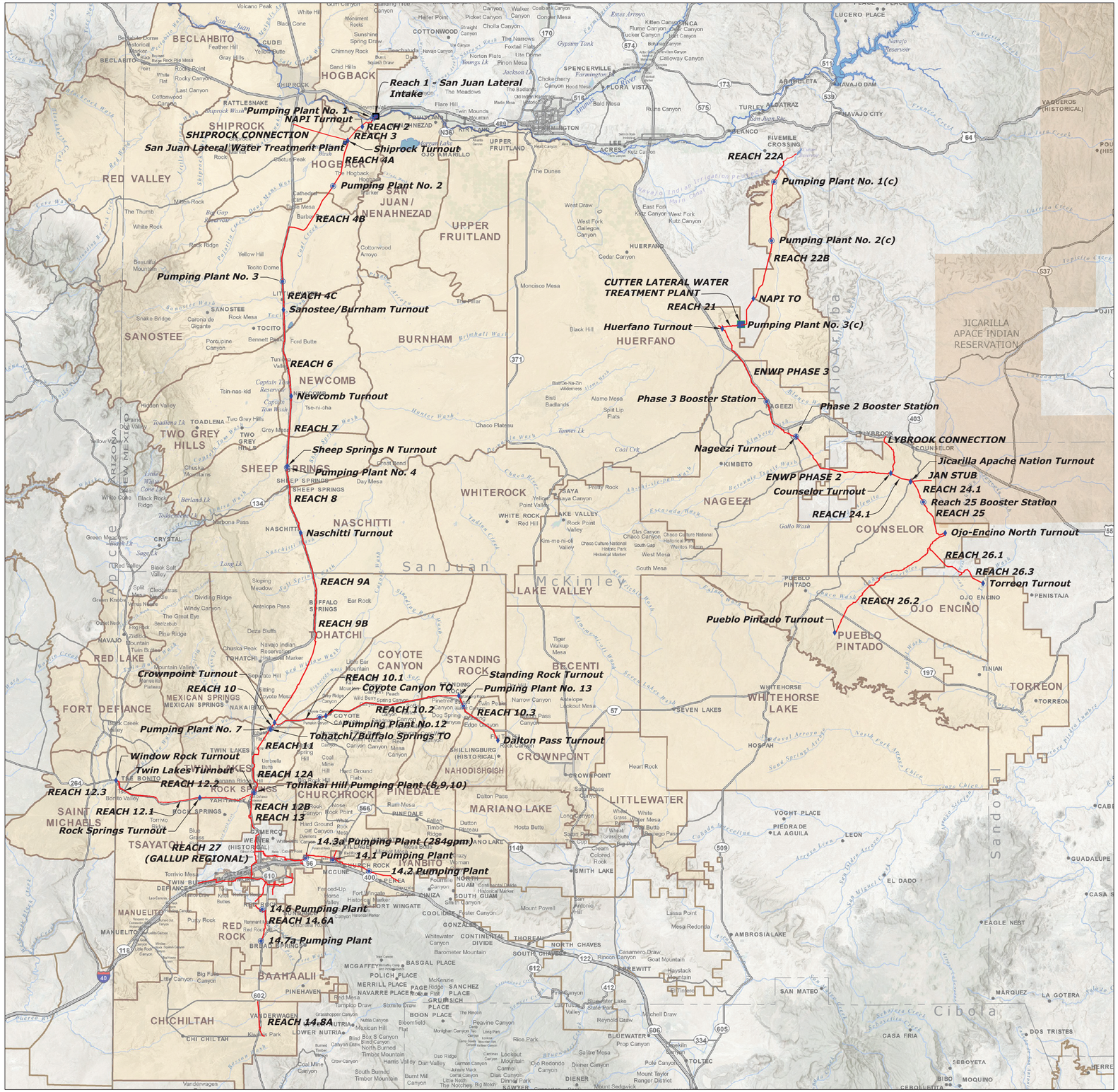

KEY MAP

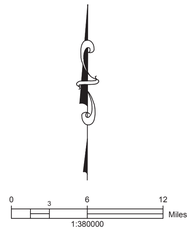

LEGEND

- Pipeline (Varied by Reach)
- Water Treatment Plant
- Pumping Plant Location
- Turnout Location
- Jicarilla Indian Reservation
- Navajo Nation Indian Reservation (Chapters)
- Highway (as designated)
- County Line

RECLAMATION
Managing Water in the West

ALWAYS THINK SAFETY

U.S. DEPARTMENT OF THE INTERIOR
BUREAU OF RECLAMATION
NAVAJO-GALLUP WATER SUPPLY PROJECT
NEW MEXICO

SAN JUAN LATERAL

N.A.
DESIGNED
D. Thornburg
DRAWN
Bart Deming
CHECKED
Deming, Bart W P.E.
TECH. APPR.
Page, Patrick J P.E.
APPROVED
ADMIN APPROVAL - FCCO Deputy Construction Engineer

FARMINGTON, NM 2018-05-23

GENERAL MAP

1695-529-60222

SHEET 1

Released

DATE AND TIME PLOTTED
MAY 6, 2018 10:30
PLOTTED BY
DTHORNBURG

CAD SYSTEM
AutoCAD Rel. 22.0s
CAD FILENAME
1695-529-60145-RD-1.DWG

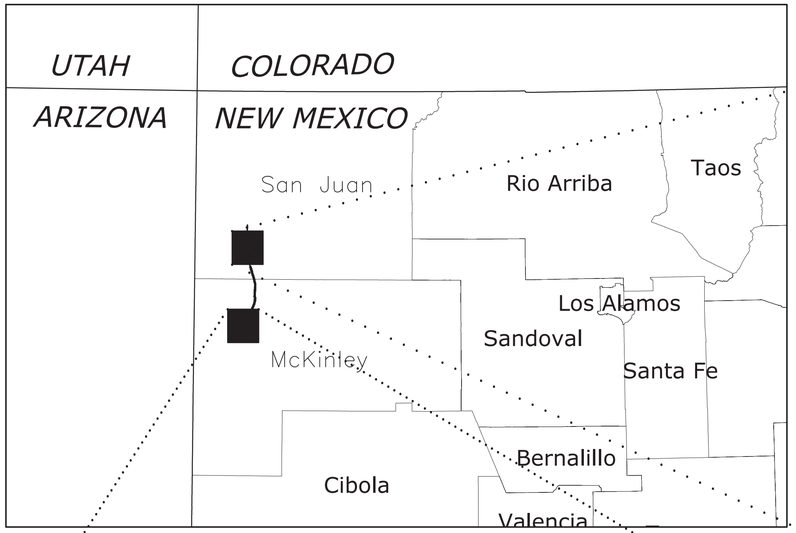

KEY MAP

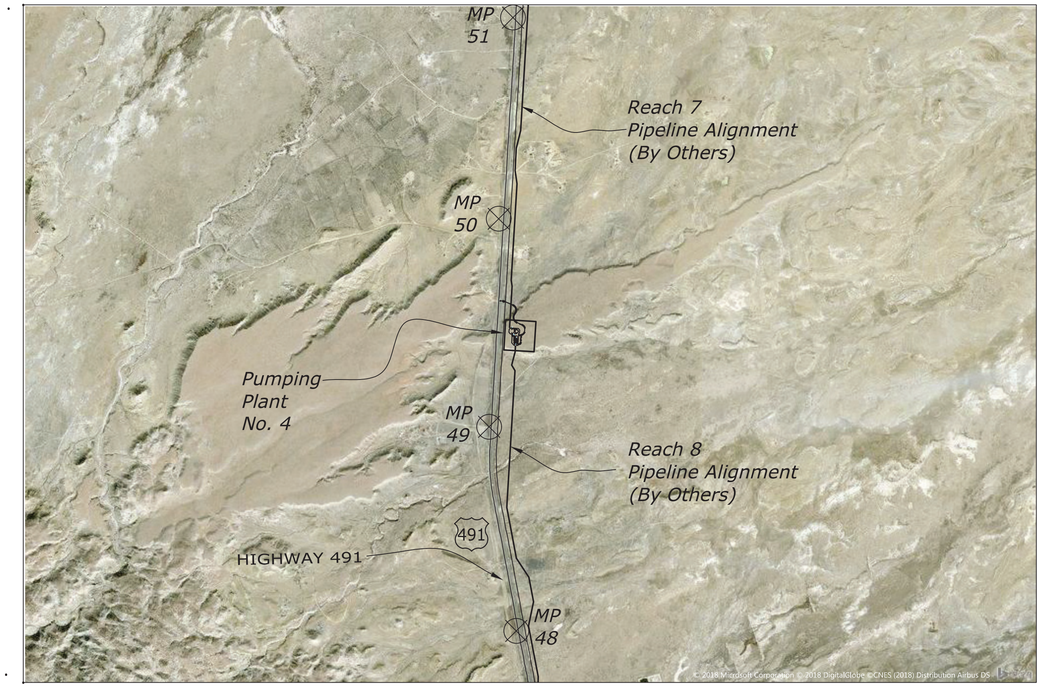

PUMPING PLANT 4 - LOCATION MAP

(SITE SPLITS BETWEEN SECTION 36 TOWNSHIP 23N RANGE 18W)
AND SECTION 1 TOWNSHIP 22N RANGE 18W)

2000 0 2000 4000 6000
SCALE OF FEET

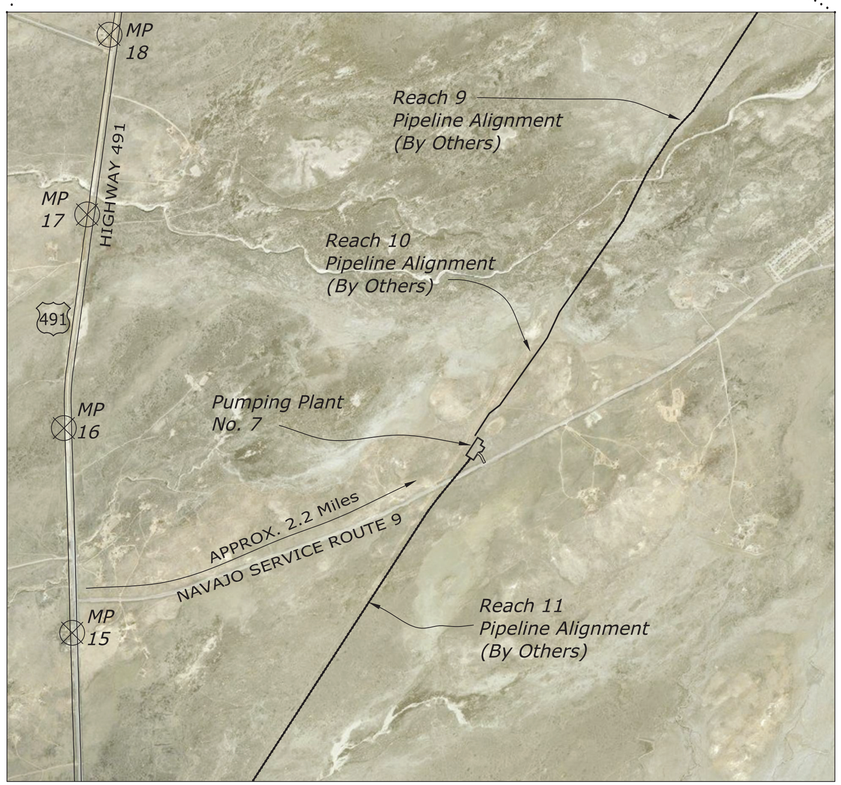

PUMPING PLANT 7 - LOCATION MAP
(SECTION 34 TOWNSHIP 18N RANGE 18W)

2000 0 2000 4000 6000
SCALE OF FEET

N

LEGEND

- Mile Post
- State Highway
- Pipeline Alignments

RECLAMATION
Managing Water in the West

ALWAYS THINK SAFETY

U.S. DEPARTMENT OF THE INTERIOR
BUREAU OF RECLAMATION
NAVAJO-GALLUP WATER SUPPLY PROJECT
NEW MEXICO

SAN JUAN LATERAL

GENERAL MAP

RYAN GLADDEN
DESIGNED
RYAN GLADDEN
DRAWN
CHICO QUINTANA
CHECKED
Deming, Bart W P.E.
TECH. APPR.
Longwell, Barry D
APPROVED
ADMIN. APPROVAL - Project Construction Engineer

FARMINGTON, NM 2018-08-30

PUMPING PLANT NOS. 4
AND 7

1695-529-60256

SHEET 1

DATE AND TIME PLOTTED
MAY 22, 2017 13:17
PLOTTED BY
DTHORNBURG

CAD SYSTEM
AutoCAD Rel. 20.0s
CAD FILENAME
1695-529-60099-RD-1.DWG

Released

Released

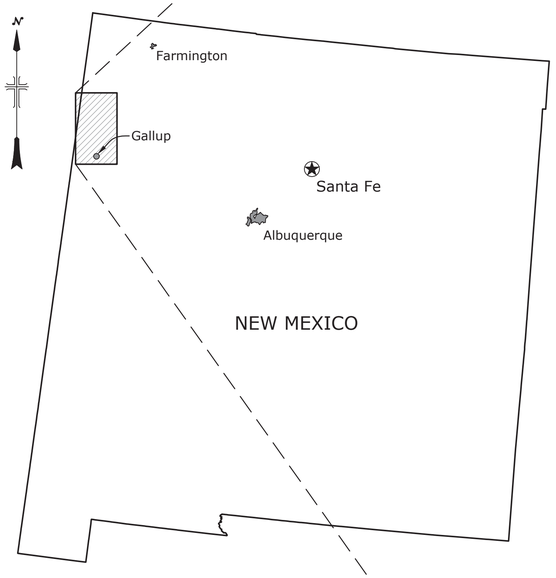

KEY MAP
(No Scale)

VICINITY MAP LEGEND

- Pumping Plant Location
- Pipeline (by REACH)
- Highway/Road (as desiginated)

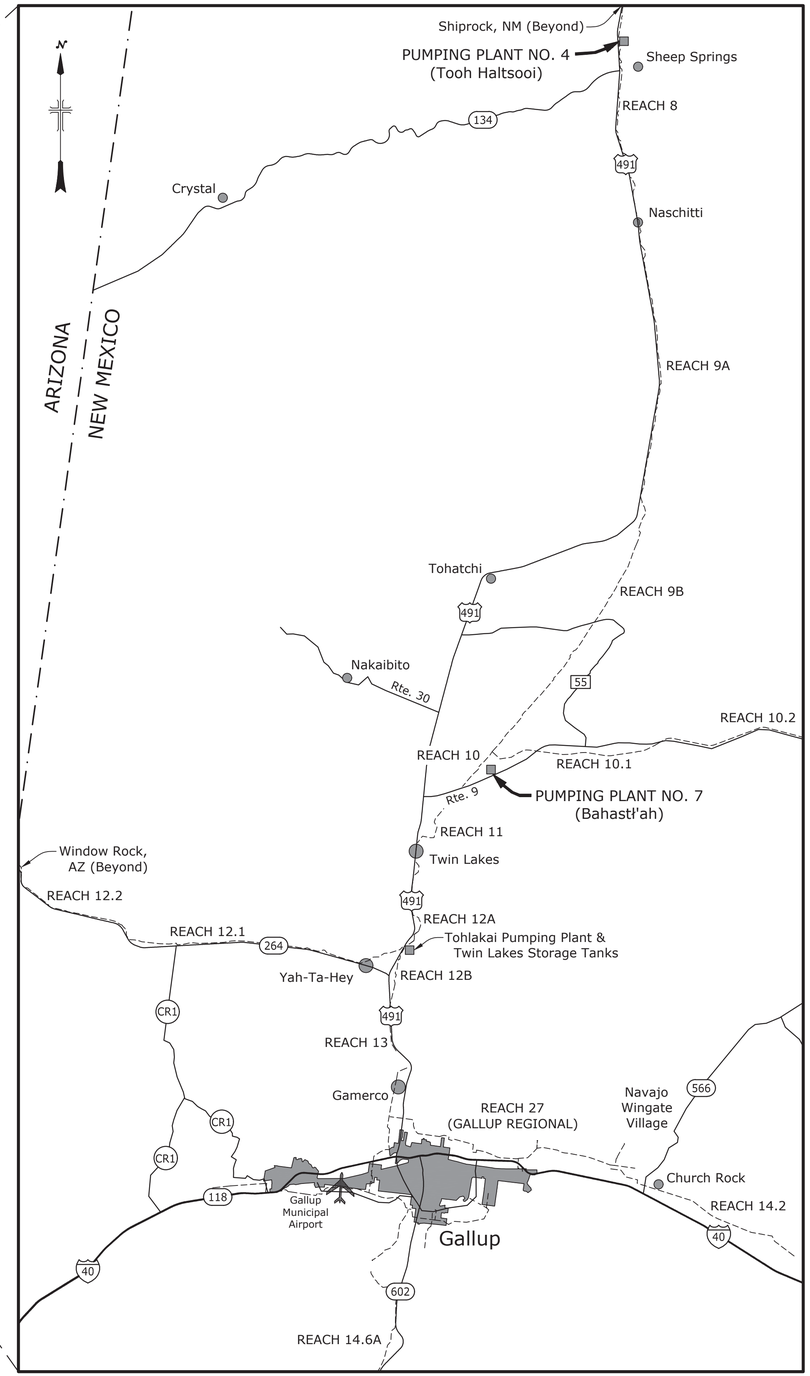

VICINITY MAP

3 0 3 6 9
SCALE OF MILES

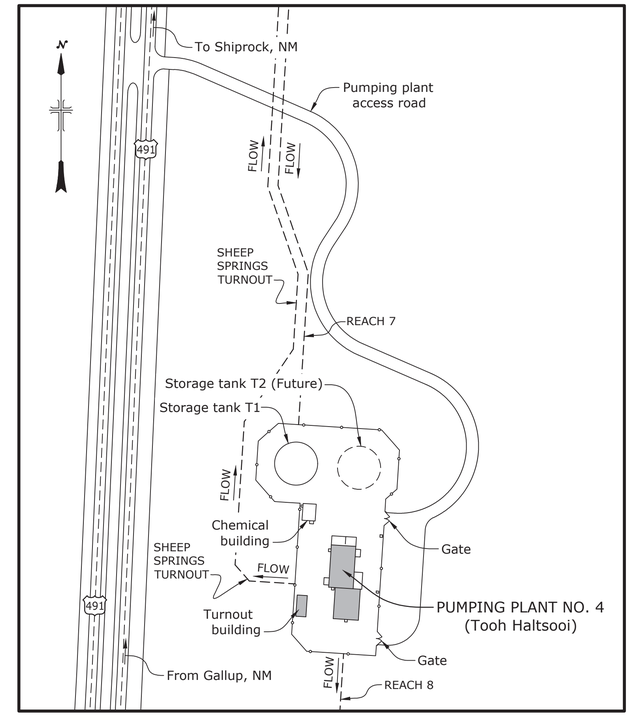

AREA MAP
PUMPING PLANT NO. 4

150 0 150 300 450
SCALE OF FEET

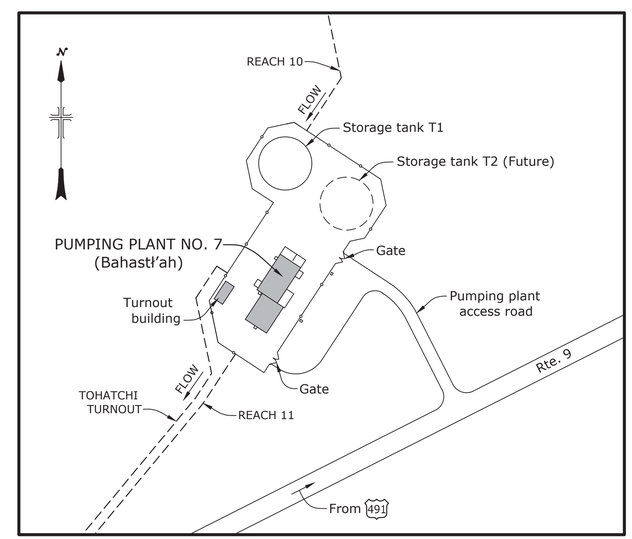

AREA MAP
PUMPING PLANT NO. 7

150 0 150 300 450
SCALE OF FEET

RECLAMATION
Managing Water in the West

ALWAYS THINK SAFETY

U.S. DEPARTMENT OF THE INTERIOR
BUREAU OF RECLAMATION
NAVAJO-GALLUP WATER SUPPLY PROJECT
NEW MEXICO

SAN JUAN LATERAL

PUMPING PLANT NOS. 4 AND 7

REV NO		
1	2020-01-24 KEVIN O'SHEA, P.E.	D--	ADDED TURNOUT BUILDING TO AREA MAPS

ROBERT D. RODRIGUEZ
DESIGNED
ROBERT D. RODRIGUEZ
DRAWN
KEVIN O'SHEA
CHECKED
O'Shea, Kevin M P.E.
TECH. APPR.
Bernstein, Alfred I P.E.
APPROVED
PEER REVIEWER - Plant Structures Group

DENVER, CO 2018-08-10

KEY MAP, VICINITY MAP, AND AREA MAP

1695-D-60398

SHEET 1

LAST SAVED DATE
2020-01-23
LAST SAVED BY
KOSHEA

CAD SYSTEM
AutoCAD Civil 3D
CAD FILE NAME
1695-D-60398-RD-1.DWG

DESIGN CRITERIA

GENERAL DESIGN STANDARDS

DESIGN STANDARDS

- International Building Code (IBC) 2015.
- American Society of Civil Engineers (ASCE) 7-10, "Minimum Design Loads for Buildings and Other Structures".

BASIC LOAD COMBINATIONS

LOAD COMBINATIONS USING STRENGTH DESIGN OR LOAD RESISTANCE FACTOR DESIGN (LRFD)

U = 1.4(D + F)
U = 1.2(D + F) + 1.6(L) + 1.6(H) + 0.5(L_r or S or R)
U = 1.2(D + F) + 1.6(L_r or S or R) + 1.6(H) + (L or 0.5W)
U = 1.2(D + F) + 1.6(H) + 1.0(W) + 1.0(L) + + 0.5(L_r or S or R)
U = 1.2(D) + 1.6(H) + 1.0(E) + 1.0(L) + 0.2(S)
U = 0.9(D) + 1.6(H) + 1.0(W)
U = 0.9(D) + 1.6(H) + 1.0(E)

NOTES:

1. For symbols and notation refer to ASCE 7-10, Section 2.2.
2. Refer to ACI 318-14, Section 5.3, IBC 2015, Section 1605, and ASCE 7-10, Section 2.3 for load combinations.
3. Omit roof live loads (L_r), snow loads (S), or wind loads (W) where or when they do not occur.
4. Where fluid loads (F) are present, they shall be included with the same load factor as dead load (D).
5. Where soil loads (H) are present, they shall be included as specified in ASCE 7-10, Section 2.3.2.
6. Earthquake load (E) for the substructure consists of the pseudo static lateral force produced by applying the peak horizontal ground acceleration to the mass of the structure.
7. The value of H to be used in combination with E for the substructure consists of the earthquake loads from backfill and water that are applied to the substructure.
8. Earthquake load (E) shown in these equations developed using IBC 2015, Section 1613.

REINFORCED CONCRETE DESIGN

DESIGN STANDARDS

- American Concrete Institute (ACI) 318-14, "Building Code Requirements for Structural Concrete".
- ACI 350-06, "Code Requirements for Environmental Engineering Concrete Structures and Commentary".
- Bureau of Reclamation Design Standards No. 9, "Buildings and Other Structures".
- Bureau of Reclamation "Design Criteria for Concrete Retaining Walls", 1977.

DESIGN METHOD

Strength Design

MATERIALS

CONCRETE - 28 day compressive strength (f'_c) = 4,500 lb/in²
REINFORCEMENT - Minimum yield strength (f_y) = 60,000 lb/in²

MINIMUM SHRINKAGE AND TEMPERATURE REINFORCEMENT

Permanently exposed slabs ---------- 0.004
All other slabs and walls ---------- 0.003

Assume maximum concrete thickness of 18-inches for each face when computing temperature and shrinkage reinforcement.

STRUCTURAL STEEL DESIGN

DESIGN STANDARDS

- American Institute of Steel Construction (AISC) 325-11, "Steel Construction Manual, Fourteenth Edition".
- AISC 360-10, "Specification for Structural Steel Buildings".

DESIGN METHOD

Load Resistance Factor Design (LRFD)

MATERIALS

STRUCTURAL STEEL
ASTM A36 - Minimum yield strength (f_y) = 36,000 lb/in²
ASTM A500, Gr. B - Minimum yield strength (f_y) = 42,000 lb/in² (Round)
ASTM A500, Gr. B - Minimum yield strength (f_y) = 46,000 lb/in² (Rect.)
ASTM A572, Gr. 50 - Minimum yield strength (f_y) = 50,000 lb/in²
ASTM A992 - Minimum yield strength (f_y) = 50,000 lb/in²
ASTM A1085 - Minimum yield strength (f_y) = 50,000 lb/in²

DESIGN CRITERIA (CONT.)

REINFORCED MASONRY DESIGN

DESIGN STANDARDS

The Masonry Society (TMS) 402-13, "Building Code Requirements and for Masonry Structures".

TMS 602-13, "Specification for Masonry Structures"

DESIGN METHOD

Strength Design

MATERIALS

MASONRY - Compressive Strength (f'_m) = 1,500 lb/in²
GROUT STRENGTH - 28-day Compressive Strength (f'_g) = 2,000 lb/in²
MORTAR = Type N
REINFORCEMENT - Minimum yield strength (f_y) = 60,000 lb/in²

GEOTECHNICAL DESIGN

REFERENCE:

Pumping Plant 4 - Geotechnical Design; TM No. ZN-8314-4
Pumping Plant 7 - Geotechnical Design; TM No. ZN-8314-5

PUMPING PLANT NO. 4 / CHEMICAL BUILDING / TURNOUT BUILDING
Allowable Bearing Capacity, q_{all} = 4,000 lb/ft²
Modulus of subgrade reaction, k = 150 kip/ft²/ft ≤ k ≤ 300 kip/ft²/ft
Angle of internal friction, ø = 36-degrees
Cohesion, c = 0 lb/in²

PUMPING PLANT NO. 7 / TURNOUT BUILDING
Allowable Bearing Capacity, q_{all} = 2,500 lb/ft²
Modulus of subgrade reaction, k = 150 kip/ft²/ft ≤ k ≤ 300 kip/ft²/ft
Angle of internal friction, ø = 33-degrees
Cohesion, c = 0 lb/in²

STABILITY ANALYSIS CRITERIA

- Stability analysis include construction and completed conditions
- Vertical loads consist of structure dead loads, stationary equipment loads, hydrostatic and backfill loads, and uplift pressure.
- Horizontal loads consist of hydrostatic loads, lateral backfill pressures, hydraulic thrusts, wind, and earthquake forces.
- Water does not penetrate construction joints in concrete

MINIMUM FACTOR OF SAFETY	DURING CONSTRUCTION		AFTER COMPLETION	
	NORMAL	EXTREME	NORMAL	EXTREME
Overturning	1.1	1.1	1.2	1.1
Shear - Friction	1.5	1.1	2.0	1.5
Flotation	1.1	1.1	1.2	1.1

LOAD DESIGNATIONS AND EXPLANATIONS

(D) DEAD LOADS

Concrete ---------- 150 lb/ft³
Vertical water loads ---------- 62.4 lb/ft³
Structural Steel ---------- 490 lb/ft³
Vertical earth loads:
PUMPING PLANT NO. 4 / CHEMICAL BUILDING/ TURNOUT BUILDING
Dry ---------- 120 lb/ft³
Saturated ---------- 135 lb/ft³
PUMPING PLANT NO. 7/ TURNOUT BUILDING
Dry ---------- 112 lb/ft³
Saturated ---------- 133 lb/ft³

(L) LIVE LOADS

- Uniform loads and special concentrated loads are listed within the *Live and Equipment Load Table, see 1695-D-60400*.
- Foundation pressures computed from stability analyses are treated as live loads.
- Construction loads are uniform loads spread over the entire area to account for construction equipment.
- Completed loads are uniform loads over the area not occupied by equipment and are used in conjunction with appropriate concentrated equipment loads.
- Apply roof live load (L_r) in accordance with IBC 2015, Section 1607 and ASCE 7-10, Chapter 7.

(F) FLUID LOADS (HYDROSTATIC)

Includes all situations where horizontal water loads may exist and corresponding uplift pressures where applicable.

Water Pressure ---------- 62.4 lb/ft²/ft

LOAD DESIGNATIONS AND EXPLANATIONS (CONT.)

(S) SNOW LOADS

Apply in accordance with IBC 2015, Section 1608 and ASCE 7-10, Chapter 7.

CHEMICAL BUILDING:
Snow Importance Factor (I_s) = 1.20
Exposure Factor (C_e) = 0.9
Thermal Factor (C_t) = 1.1
Ground Snow Load (p_g) = 10 psf
Design Flat Roof Snow Load (p_f) = 12 psf

PUMPING PLANT NOS. 4 and 7:
Snow Importance Factor (I_s) = 1.10
Exposure Factor (C_e) = 1.0
Thermal Factor (C_t) = 1.1
Ground Snow Load (p_g) = 10 psf
Design Flat Roof Snow Load (p_f) = 11 psf

TURNOUT BUILDING:
Snow Importance Factor (I_s) = 1.10
Exposure Factor (C_e) = 0.9
Thermal Factor (C_t) = 1.1
Ground Snow Load (p_g) = 10 psf
Design Flat Roof Snow Load (p_f) = 12 psf

(W) WIND LOADS

Apply in accordance with IBC 2015, Section 1609 and ASCE 7-10, Chapter 26.

Risk category III - Pumping Plant Nos. 4 and 7
Risk category IV - Chemical Building / Turnout Building
MRI = 1700 years (3% probability of exceedance in 50 years)
Basic wind speed (3-second gust) = 120 mph
Wind Exposure Category = C
Internal Pressure Coefficient (GC_{pi}) = ±0.18

(H) LATERAL EARTH PRESSURES

PUMPING PLANT NO. 4 / CHEMICAL BUILDING / TURNOUT BUILDING
Active Pressures (Rankine)
Dry ---------- 31.2 lb/ft²/ft
Saturated ---------- 81.2 lb/ft²/ft
At Rest Pressures (Rankine)
Dry ---------- 49.5 lb/ft²/ft
Saturated ---------- 92.3 lb/ft²/ft

PUMPING PLANT NO. 7 / TURNOUT BUILDING
Active Pressures (Rankine)
Dry ---------- 33.0 lb/ft²/ft
Saturated ---------- 83.2 lb/ft²/ft
At Rest Pressures (Rankine)
Dry ---------- 51.0 lb/ft²/ft
Saturated ---------- 94.5 lb/ft²/ft

Note:
A surcharge equal to an additional 2 feet of dry earth is added where localized equipment loads can cause an increase in lateral earth pressures.

(R) RAIN LOADS

Apply in accordance with IBC 2015, Section 1611 and ASCE 7-10, Chapter 8.

(I) ICE LOADS

Apply in accordance with IBC 2015, Section 1614 and ASCE 7-10, Chapter 10.

(T) TEMPERATURE VARIATIONS

All members above grade: ---------- ±50° F
All members below grade: ---------- ±20° F

LOAD DESIGNATIONS AND EXPLANATIONS (CONT.)

(E) SEISMIC LOADS

The seismic analysis and design of structures above grade are based on IBC 2015, Section 1613 and ASCE 7-10, Chapter 11, and Design Response Spectrum shown below.

Design Parameters (IBC 2015, Section 1613 and ASCE 7-10, Chapter 11)

Risk-Targeted Ground Motion (1% chance of collapse in 50 years)

CHEMICAL BUILDING
Risk category IV
Seismic importance factor (I_e) = 1.50
Site class C
Mapped spectral response coefficients:
S_s = 0.149g, S_1 = 0.049g
Spectral response coefficient adjust for Site Class effects:
S_{MS} = 0.179g, S_{M1} = 0.083g
Design spectral response coefficients:
S_{DS} = 0.119g , S_{D1} = 0.055g
Seismic design category = A

PUMPING PLANT NO. 4 / TURNOUT BUILDING
Risk category III / IV
Seismic importance factor (I_e) = 1.25 / 1.50
Site class C
Mapped spectral response coefficients:
S_s = 0.149g, S_1 = 0.049g
Spectral response coefficient adjust for Site Class effects:
S_{MS} = 0.179g, S_{M1} = 0.083g
Design spectral response coefficients:
S_{DS} = 0.119g , S_{D1} = 0.055g
Seismic design category = A

PUMPING PLANT NO. 7 / TURNOUT BUILDING
Risk category III / IV
Seismic importance factor (I_e) = 1.25 / 1.50
Site class C
Mapped spectral response coefficients:
S_s = 0.183g, S_1 = 0.053g
Spectral response coefficient adjust for Site Class effects:
S_{MS} = 0.220g, S_{M1} = 0.091g
Design spectral response coefficients:
S_{DS} = 0.147g , S_{D1} = 0.060g
Seismic design category = A

DESIGN RESPONSE SPECTRUM

Risk-Targeted Maximum Considered Earthquake (5% Damped)

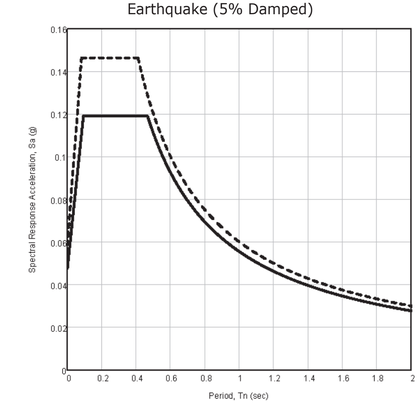

PUMPING PLANT NO. 4: Latitude: 36.177°N, Longitude: 108.710°W ———

PUMPING PLANT NO. 7: Latitude: 35.749°N, Longitude: 108.739°W - - - - - -

RECLAMATION
Managing Water in the West

ALWAYS THINK SAFETY

U.S. DEPARTMENT OF THE INTERIOR
BUREAU OF RECLAMATION
NAVAJO-GALLUP WATER SUPPLY PROJECT
NEW MEXICO

SAN JUAN LATERAL
PUMPING PLANT NOS. 4 AND 7

Kevin O'Shea
DESIGNED
Kevin O'Shea
DRAWN
Brandon Jackson
CHECKED
TECH. APPR. Brandon Jackson, P.E.
APPROVED Alfred I. Bernstein
Peer Reviewer - Plant Structures Group

DENVER, CO 2020-01-24

STRUCTURAL DESIGN DATA

GENERAL

1695-D-60399

LIVE AND EQUIPMENT LOAD TABLE

CHEMICAL BUILDING			
ELEVATION (See Note 1)	LOCATION	UNIFORM LIVE LOAD (PSF)	EQUIPMENT & CONCENTRATED LOADS
El. 0.00	Floor	150	-----
El. -2.50	Containment Floor	150	B1
	Roof (See Note 2)	20	300 lb.
PUMPING PLANT NO. 4			
ELEVATION (See Note 1)	LOCATION	UNIFORM LIVE LOAD (PSF)	EQUIPMENT & CONCENTRATED LOADS
El. 0.00	Floor	300	A1A, A2A, A2B, A2C, A2D, A2E, A2F, A3A, C1A
	Roof (See Note 2)	20	300 lb.
PUMPING PLANT NO. 7			
ELEVATION (See Note 1)	LOCATION	UNIFORM LIVE LOAD (PSF)	EQUIPMENT & CONCENTRATED LOADS
El. 0.00	Floor	300	A1B, A2A, A2B, A2C, A2D, A2E, A2F, A3B, C1B
	Roof (See Note 2)	20	300 lb.
TURNOUT BUILDING			
ELEVATION (See Note 1)	LOCATION	UNIFORM LIVE LOAD (PSF)	EQUIPMENT & CONCENTRATED LOADS
El. -1.00	Floor	150	-----
	Roof (See Note 2)	20	-----
EVAPORATIVE COOLER FOUNDATION			
ELEVATION (See Note 1)	LOCATION	UNIFORM LIVE LOAD (PSF)	EQUIPMENT & CONCENTRATED LOADS
El. 0.00	Floor	150	D1A
ENGINE-GENERATOR AND SWITCHGEAR FOUNDATION			
ELEVATION (See Note 1)	LOCATION	UNIFORM LIVE LOAD (PSF)	EQUIPMENT & CONCENTRATED LOADS
El. 0.00	Floor	300	C1C, C1D
SERVICE YARD			
ELEVATION	LOCATION	UNIFORM LIVE LOAD (PSF)	EQUIPMENT & CONCENTRATED LOADS
Varies	Yard	----	E1

1. For building elevation datums, see (60411), (60428), and (60435)
2. Roof load shown in table is for live load only and does not include any other loads required under design criteria. Apply loads in accordance with ASCE 7-10, Chapter 4 and IBC 2015, Section 1607.

A1 HYDRAULIC EQUIPMENT - PUMPS

A	PUMPING PLANT NO. 4 - 11.92 ft^3/s Units	
Pumps / base weight (lbs.)		8,800 ea.
B	PUMPING PLANT NO. 7 - 10.10 ft^3/s Units	
Pumps / base weight (lbs.)		6,200 ea.

A2 HYDRAULIC EQUIPMENT - VALVES

A	AWWA Class 300, Motor-Opearated Ball Valve / weight (lbs.)	
1' - 0" Dia.		1,228 ea.
B	ANSI Class 250, Tilting-Disc Check Valve / weight (lbs.)	
1' - 4" Dia.		1,619 ea.
C	ANSI Class 300, Pressure Sustaining Valve / weight (lbs.)	
1' - 0" Dia.		1,165 ea.
D	ANSI Class 300, Motor-Operated Ball Valve / weight (lbs.)	
1' - 4" Dia.		2,885 ea.
E	High Performance (300-psi) Butterfly Valve / weight (lbs.)	
0' - 6" Dia.		200 ea.
1' - 0" Dia.		460 ea.
1' - 4" Dia.		800 ea.
F	Combination Air Valve Assbmely (300-psi) / weight (lbs.)	
0' - 6" Dia.		205 ea.

A3 HYDRAULIC EQUIPMENT - AIR CHAMBERS

A	PUMPING PLANT NO. 4		
Vertical Cylindrical Steel Air Chamber		25,433 ea.	91,051 ea.
B	PUMPING PLANT NO. 7		
Vertical Cylindrical Steel Air Chamber		15,484 ea.	68,356 ea.

B1 CHEMICAL EQUIPMENT - FRP TANK

A	Volume (gal)	Empty Weight (lbs)
Fiber-Reinforced Polymer Tank	5,000	2,860

C1 ELECTRICAL EQUIPMENT

	Dimensions (L x W x H)	Weight (lbs)
A PUMPING PLANT NO. 4		
Motors		
Unit 1 (1,000 Hp)	----	5,450
Unit 2 (1,000 Hp)	----	5,450
Unit 3 (1,000 Hp)	----	5,450
Unit 4 (1,000 Hp)	----	5,450
Motor Control Lineup	240" x 30" x 92"	8,400
480V Station Service Switchgear	170" x 48" x 90"	4,200
PLC Cabinet	48" x 24" x 78"	400
B PUMPING PLANT NO. 7		
Motors		
Unit 1 (900 Hp)	----	6,700
Unit 2 (900 Hp)	----	6,700
Unit 3 (900 Hp)	----	6,700
Unit 4 (900 Hp)	----	6,700
Motor Control Lineup	240" x 30" x 92"	8,400
480V Station Service Switchgear	170" x 48" x 90"	4,200
PLC Cabinet	48" x 24" x 78"	400

C ENGINE-GENERATOR SET	
	Empty Weight (lbs)
PUMPING PLANT NO. 4	2,800
PUMPING PLANT NO. 7	2,800

D OUTDOOR SWITCHGEAR (WITH TRANSFORMER)	
	Weight (lbs)
PUMPING PLANT NO. 4	15,000
PUMPING PLANT NO. 7	15,000

D1 MECHANICAL EQUIPMENT

A HVAC UNITS	
	Dry Weight (lbs)
PUMPING PLANT NO. 4	5,700
PUMPING PLANT NO. 7	5,700

1

E1 HS20-44 TRUCK

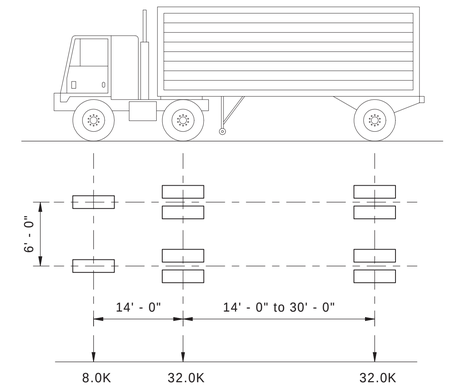

Axle load in kips. Add 25% for impact loading.

RECLAMATION
Managing Water in the West

ALWAYS THINK **SAFETY**

U.S. DEPARTMENT OF THE INTERIOR
BUREAU OF RECLAMATION
NAVAJO-GALLUP WATER SUPPLY PROJECT
NEW MEXICO

SAN JUAN LATERAL
PUMPING PLANT NOS. 4 AND 7

REV NO	STA		
1	D	2020-02-24 Kevin O'Shea	Revised table name.

Kevin O'Shea
DESIGNED
Kevin O'Shea
DRAWN
Brandon Jackson
CHECKED
Brandon Jackson, P.E.
TECH. APPR. Brandon Jackson, P.E.
Alfred I. Bernstein
APPROVED Alfred I. Bernstein
Peer Reviewer - Plant Structures Group

DENVER, CO 2020-01-24

STRUCTURAL DESIGN DATA

LOADS

1695-D-60400

STATEMENT OF SPECIAL INSPECTIONS

GENERAL
The Contracting Officer's Representative (COR) will engage and employ a qualified special inspection agency or agencies to conduct special inspections of structural work as delineated below. Agencies that are considered qualified and acceptable to act as special inspectors will be those acceptable to the COR.

SPECIAL INSPECTION REPORT REQUIREMENTS
Special Inspectors shall keep records of inspections. The Special Inspector shall furnish inspection reports to the COR, Architect, Engineer of Record, and Contractor. Reports shall indicate that the structural work inspected was done in conformance to approved contract documents. Discrepancies shall be brought to the immediate attention of the contractor for correction. If the discrepancies are not corrected, the discrepancies shall be brought to the attention of the COR, Architect and Engineer of Record prior to the completion of that phase of work. A final report of inspections documenting required special inspections of structural work and correction of any discrepancies noted in the inspections shall be submitted at a point in time agreed upon by the COR prior to the start of work. The Special Inspection program does not relieve the Contractor of his or her responsibilities.

REQUIRED SPECIAL INSPECTIONS AND TESTS
Tables 1 thru 5 identify types of structural work that require special inspections. Refer to individual specification sections for specific testing and inspecting requirements.

Continuous/Perform: The full-time observation of work by a qualified special inspector who is present in the area where the work is being performed.

Periodic/Observe: The part-time or intermittent observation of work by a qualified special inspector who is present in the area where the work has been or is being performed ad at the completion of the work. Operations need not be delayed pending these inspections.

REFERENCE STANDARDS
See Structural Design Data on drawing 1695-D-60399

TABLE 1

REQUIRED SPECIAL INSPECTIONS AND TESTS OF CONCRETE CONSTRUCTION (IBC - Table 1705.3)

SYSTEM or MATERIAL	INSPECTION				REMARKS
	IBC CODE REFERENCE	CODE or STANDARD REFERENCE	FREQUENCY		
			CONTINUOUS	PERIODIC	
1. Inspect reinforcement, including prestressing tendons, and verify placement.	1908.4	ACI 318 Ch. 20, 25.2, 25.3, 26.6.1-26.6.3		X	
2. Reinforcing bar welding:		AWS D1.4 ACI 318: 26.6.4			
a. Verify weldability of reinforcing bars other than ASTM A706;				X	
b. Inspect single-pass fillet welds, maximum 5/16"; and				X	
c. Inspect all other welds.			X		
3. Inspect anchors cast in concrete.		ACI 318: 17.8.2		X	
4. Inspect anchors post-installed in hardened concrete members.					4.b: All anchors shall be visually inspected. Where periodic inspection is allowed in accordance with the anchor ICC evaluation report, inspections shall be as follows: • For all anchors, prior to concealment, verify anchor type, anchor dimensions, anchor spacing and edge distance. • For each anchor type and size, inspector shall be onsite to continuously inspect a minimum of the first 10 anchors installed by each installer for conformance with the ICC evaluation report. Provided all anchors are installed correctly per manufacturer's instructions, provide periodic inspections a minimum of the next 10% of the next 1000 anchors by each installer and a minimum of 5% of the remaining anchors by each installer. Inspections shall occur a minimum of once per week at a random time while anchor installation is ongoing. Any non-compliance issues shall reset the inspection requirements to ten (10) continuous inspections. Non-compliant anchors shall be brought to the attention of the engineer of record for review and shall be brought into compliance by either testing or re-installation. • Inspection reports shall identify names of installers. Special inspector shall provide documentation at the end of anchor installations stating that the minimum number of anchors were inspected.
a. Adhesive anchors installed in horizontally or upwardly inclined orientations to resist sustained tension loads.		ICC Evaluation Report, ACI 318: 17.8.2.4	X		
b. Mechanical anchors and adhesive anchors not defined in 4.a.		ACI 318: 17.8.2		X	
5. Verify use of required design mix.	1904.1, 1904.2, 1908.2, 1908.3	ACI 318: Ch. 19, 26.4.3, 26.4.4		X	
6. Prior to concrete placement, fabricate specimens for strength tests, perform slump and air content tests, and determine the temperature of the concrete.	1908.10	ASTM C172 ASTM C31 ACI 318: 26.4, 26.12	X		
7. Inspect concrete placement for proper application techniques.	1908.6, 1908.7, 1908.8	ACI 318: 26.5	X		
8. Verify maintenance of specified curing temperature and techniques.	1908.9	ACI 318: 26.5.3-26.5.5		X	
10. Inspect erection of precast concrete members.		ACI 318: Ch. 26.8		X	
11. Verify in-situ concrete strength, prior to stressing of tendons in post-tensioned concrete and prior to removal of shores and forms from beams and structural slabs.		ACI 318: 26.11.2		X	
12. Inspect formwork for shape, location and dimensions of the concrete member being formed.		ACI 318: 26.11.1.2(b)		X	

TABLE 2

REQUIRED SPECIAL INSPECTIONS AND TESTS OF MASONRY CONSTRUCTION (IBC - Section 1705.4)

SYSTEM or MATERIAL	MINIMUM SPECIAL INSPECTION			REMARKS
	CODE or STANDARD REFERENCE	FREQUENCY		
		CONTINUOUS	PERIODIC	
1. Verify compliance with the approved submittals.	TMS 602/ACI 530.1/ASCE 6 Art. 1.5		X	TMS 602 - Table 4, Level B Quality Assurance
2. As masonry construction begins, verify that the following are in compliance:				
a. Proportions of site-prepared mortar	TMS 602/ACI 530.1/ASCE 6 Art. 2.1, 2.6 A		X	TMS 602 - Table 4, Level B Quality Assurance
b. Construction of mortar joints	TMS 602/ACI 530.1/ASCE 6 Art. 3.3 B		X	TMS 602 - Table 4, Level B Quality Assurance
d. Location of reinforcement and connectors	TMS 602/ACI 530.1/ASCE 6 Art. 3.4, 3.6 A		X	TMS 602 - Table 4, Level B Quality Assurance
3. Prior to grouting, verify that the following are in compliance:				
a. Grout space	TMS 602/ACI 530.1/ASCE 6 Art. 3.2D, 3.2 F		X	TMS 602 - Table 4, Level B Quality Assurance
b. Grade, type, and size of reinforcement and anchor bolts	TMS 402/ACI 530/ASCE 5 Sec 6.1 TMS 602/ACI 530.1/ASCE 6 Art. 2.4, 3.4		X	TMS 602 - Table 4, Level B Quality Assurance
c. Placement of reinforcement and connectors	TMS 402/ACI 530/ASCE 5 Sec 6.1, 6.2.1, 6.2.6, 6.2.7 TMS 602/ACI 530.1/ASCE 6 Art. 3.2 E, 3.4, 3.6 A		X	TMS 602 - Table 4, Level B Quality Assurance
d. Proportions of site-prepared grout	TMS 602/ACI 530.1/ASCE 6 Art. 2.6 B, 2.4 G.1.b		X	TMS 602 - Table 4, Level B Quality Assurance
e. Construction of mortar joints	TMS 602/ACI 530.1/ASCE 6 Art. 3.3 B		X	TMS 602 - Table 4, Level B Quality Assurance
4. Verify during construction:				
a. Size and location of structural elements	TMS 602/ACI 530.1/ASCE 6 Art. 3.3 F		X	TMS 602 - Table 4, Level B Quality Assurance
b. Type, size, and location of anchors, including other details of anchorage of masonry to structural members, frames, or other construction	TMS 402/ACI 530/ASCE 5 Sec 1.2.1(e), 6.1.4.3, 6.2.1		X	TMS 602 - Table 4, Level B Quality Assurance
c. Welding of reinforcement	TMS 402/ACI 530/ASCE 5 Sec 8.1.6.7.2, 9.3.3.4(c), 11.3.3.4(b)	X		TMS 602 - Table 4, Level B Quality Assurance
d. Preparation, construction, and protection of masonry during cold weather (temperature below 40°F (4.4°C)) or hot weather (temperature above 90°F (32.2°C))	TMS 602/ACI 530.1/ASCE 6 Art. 1.8 C, 1.8 D		X	TMS 602 - Table 4, Level B Quality Assurance
e. Application and measurement of prestressing force	TMS 602/ACI 530.1/ASCE 6 Art. 3.6 B	X		TMS 602 - Table 4, Level B Quality Assurance
f. Placement of grout is in compliance	TMS 602/ACI 530.1/ASCE 6 Art. 3.5, 3.6 C	X		TMS 602 - Table 4, Level B Quality Assurance
5. Observe preparation of grout specimens, mortar specimens, and/or prisms	TMS 602/ACI 530.1/ASCE 6 Art. 1.4 B.2.a.3, 1.4 B2.b.3, 1.4 B.2.c.3, 1.4 B.3, 1.4 B.4		X	TMS 602 - Table 4, Level B Quality Assurance
MINIMUM TESTS				
Verification of Slump flow and Visual Stability Index (VSI) as delivered to the project site in accordance with TMS 602/ACI 530.1/ASCE 6 Article 1.5 B.1.b.3 for self-consolidating grout				
Verification of f'_m and f'_{AAC} in accordance with TMS 602/ACI 530.1/ASCE 6 Article 1.4 B prior to construction, except where specifically exempted by the Code.				

TABLE 3

REQUIRED SPECIAL INSPECTIONS AND TESTS OF SOILS (IBC - Table 1705.6)

SYSTEM or MATERIAL	INSPECTION				REMARKS
	IBC CODE REFERENCE	CODE or STANDARD REFERENCE	FREQUENCY		
			CONTINUOUS	PERIODIC	
Verify materials below shallow foundations are adequate to achieve the design bearing capacity.	1705.6			X	
Verify excavations are extended to proper depth and have reached proper material.	1705.6			X	
Perform classification and testing of compacted fill materials.	1705.6, 1803.5.1			X	
Verify use of proper materials, densities and lift thicknesses during placement and compaction of compacted fill.	1705.6		X		
Prior to placement of compacted fill, inspect subgrade and verify that site has been prepared properly.	1705.6			X	

NOTES

1. Speical Inspections identified herein do not apply to the either of the permitted concrete water storage tank types nor the plant-precast concrete structures, see Specifications.

RECLAMATION
Managing Water in the West

ALWAYS THINK **SAFETY**

U.S. DEPARTMENT OF THE INTERIOR
BUREAU OF RECLAMATION
NAVAJO-GALLUP WATER SUPPLY PROJECT
NEW MEXICO
SAN JUAN LATERAL
PUMPING PLANT NOS. 4 AND 7

Kevin O'Shea
DESIGNED
Kevin O'Shea
DRAWN
Brandon Jackson
CHECKED
TECH. APPR. Brandon Jackson, P.E.
APPROVED Alfred I. Bernstein
Peer Reviewer - Plant Structures Group

DENVER, CO 2020-01-24

SPECIAL INSPECTIONS

SHEET 1 OF 2

1695-D-60401

TABLE 4

REQUIRED SPECIAL INSPECTIONS AND TESTS FOR STEEL CONSTRUCTION (IBC - Section 1705.2)

SYSTEM or MATERIAL	INSPECTION				REMARKS
	IBC CODE REFERENCE	CODE or STANDARD REFERENCE	FREQUENCY		
			OBSERVE	PERFORM	
INSPECTION OF FABRICATED ITEMS.	1704.2.5				Where fabrication of structural, load-bearing or lateral load resisting members or assemblies is being conducted on the premises of a fabricator's shop, *special inspections* of the *fabricated items* shall be performed during fabrication. Reference Section 1704.5.2 for approved fabricator exception.
INSPECTION TASKS PRIOR TO WELDING:					
Welding procedure specifications (WPSs) available	1705.2	AISC 360 Table N5.4-1		X	
Manufacturer certifications for welding consumables available				X	
Material identification (type/grade)			X		
Welder identification system [1.1]			X		
Fit-up of groove welds (including joint geometry) • Joint preparation • Dimensions (alignment, root opening, root face, bevel) • Cleanliness (condition of steel surfaces) • Tacking (tack weld quality and location) • Backing type and fit (if applicable)			X		
Configuration and finish of access holes			X		
Fit-up of fillet welds • Dimensions (alignment, gaps at root) • Cleanliness (condition of steel surfaces) • Tacking (tack weld quality and location)			X		
Check welding equipment			X		
[1.1] The fabricator or erector, as applicable, shall maintain a system by which a welder who has welded a joint or member can be identified. Stamps, if used, shall be the low-stress type.					
INSPECTION TASKS DURING WELDING:					
Use of qualified welders	1705.2	AISC 360 Table N5.4-2	X		
Control and handling of welding consumables • Packaging • Exposure control			X		
No welding over cracked tack welds			X		
Environmental conditions • Wind speed within limits • Precipitation and temperature			X		
WPS followed • Settings on welding equipment • Travel speed • Selected welding materials • Shielding gas type/flow rate • Preheat applied • Interpass temperature maintained (min/max) • Proper position (F,V,H, OH)			X		
Welding techniques • Interpass and final cleaning • Each pass within profile limitations • Each pass meets quality requirements			X		
INSPECTION TASKS AFTER WELDING:					
Welds cleaned	1705.2	AISC 360 Table N5.4-3	X		
Size, length and location of welds				X	
Welds meet visual acceptance criteria • Crack prohibition • Weld/base-metal fusion • Crater cross section • Weld profiles • Weld size • Undercut • Porosity				X	
Arc strikes				X	
k-area [1.1]				X	
Backing removed and weld tabs removed (if required)				X	
Repair activities				X	
Document acceptance or rejection of welded joint or member				X	
[1.1] When welding of doubler plates, continuity plates or stiffeners has been performed in the k-area, visually inspect the web k-area for cracks within 3 in. of the weld.					

TABLE 4 (CONTINUED)

REQUIRED SPECIAL INSPECTIONS AND TESTS FOR STEEL CONSTRUCTION (IBC - Section 1705.2)

SYSTEM or MATERIAL	INSPECTION				REMARKS
	IBC CODE REFERENCE	CODE or STANDARD REFERENCE	FREQUENCY		
			OBSERVE	PERFORM	
INSPECTION TASKS PRIOR TO BOLTING:					
Manufacturer's certifications available for fastener material	1705.2	AISC 360 Table N5.6-1		X	
Fasteners marked in accordance with ASTM requirements			X		
Proper fasteners selected for the joint detail (grade, type, bolt length if threads to be excluded from shear plane)			X		
Proper bolting procedure is selected for joint detail			X		
Connecting elements, including the appropriate faying surface condition and hole preparation, if specified, meet applicable requirements			X		
Pre-installation verification testing by installation personnel observed and documented for fastener assemblies and methods used			X		
Proper storage provided for bolts, nuts, washers, and other fastener components			X		
INSPECTION TASKS DURING BOLTING:					
Fastener assemblies, of suitable condition, placed in all holes and washers (if required) are positioned as required	1705.2	AISC 360 Table N5.6-2	X		
Joint brought to the snug tight condition prior to the pretensioning operation			X		
Fastener component not turned by the wrench prevented from rotating			X		
Fasteners are pretensioned in accordance with a method approved by RCSC and progressing systematically from most rigid point toward free edges			X		
INSPECTION TASKS AFTER BOLTING:					
Document acceptance or rejection of bolted connections	1705.2	AISC 360 Table N5.6-3		X	

TABLE 5

REQUIRED SPECIAL INSPECTIONS AND TESTS FOR WIND RESISTANCE (IBC - Section 1705.11)

SYSTEM or MATERIAL	INSPECTION				REMARKS
	IBC CODE REFERENCE	CODE or STANDARD REFERENCE	FREQUENCY		
			CONTINUOUS	PERIODIC	
COLD FORMED STEEL LIGHT-FRAME CONSTRUCTION					
Inspect welding operations of elements of the main wind force-resisting system.	1705.11.2			X	
Inspect screw attachment, bolting, anchoring and other fastening of elements of the main windforce-resisting system, including shear walls, braces, diaphragms, collectors (drag struts) and hold-downs.				X	
WIND-RESISTING COMPONENTS					
Inspect the fastening of the following systems and components: • Roof covering, roof deck and roof framing connections. • Exterior wall covering and wall connections to roof and floor diaphragms and framing.	1705.11.3			X	

NOTES

1. Special Inspections identified herein do not apply to either of the permitted concrete water storage tank types nor the plant-precast concrete structures, see Specifications.

RECLAMATION
Managing Water in the West

ALWAYS THINK **SAFETY**

U.S. DEPARTMENT OF THE INTERIOR
BUREAU OF RECLAMATION

NAVAJO-GALLUP WATER SUPPLY PROJECT
NEW MEXICO

SAN JUAN LATERAL
PUMPING PLANT NOS. 4 AND 7

REV NO	STA		
1	D	2020-02-24 Kevin O'Shea	Minor note revisions

Kevin O'Shea
DESIGNED
Kevin O'Shea
DRAWN
Brandon Jackson
CHECKED
Brandon Jackson, P.E.
TECH. APPR. Brandon Jackson, P.E.
Alfred I. Bernstein
APPROVED Alfred I. Bernstein
Peer Reviewer - Plant Structures Group

DENVER, CO 2020-01-24

SPECIAL INSPECTIONS

SHEET 2 OF 2

1695-D-60402

SURVEY CONTROL POINT COORDINATES		
POINT	NORTHING	EASTING
CP1	1,884,850.69	2,464,267.90
CP2	1,884,723.16	2,464,151.16
CP3	1,884,934.14	2,464,190.76

NOTE: No grid correction factor has been applied.

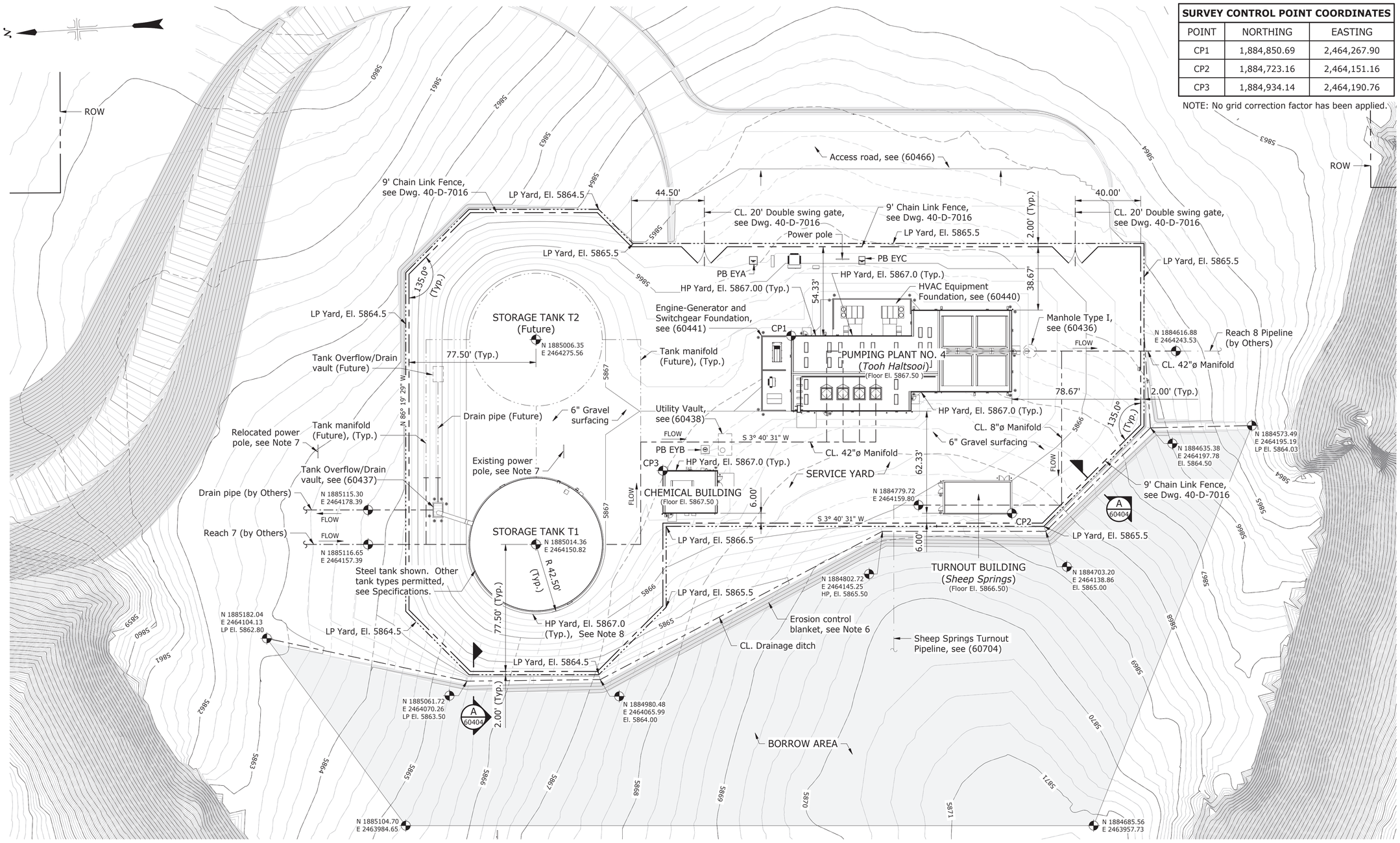

SITE AND GRADING PLAN

Scale: 1" = 30'-0"

LEGEND

	9' Chain Link Fence		Yard Extents
	Pipe Centerline		Finished Grade Contour Lines
	Right of Way (ROW)		Altered (Exisiting) Contour Lines
	Pipe (by Others)		Borrow Area Extents
	Future Features (by Others)		

ABBREVIATIONS

CL. Denotes centerline
CP Denotes field control point
HP Denotes high point
LP Denotes low point
PB Denotes pullbox
NAD Denotes North American Datum
Typ. Denotes Typical
ROW Denotes Right of Way
SIM. Denotes Similar

Pumping Plant No. 4	
Navajo Nation name	Tooh Haltsooi (To-hal-tshoh-eh)
Meaning	Water in the meadow/ "Sheep Springs"

NOTES

1. For Service Yard Surfacing Plan, See (60405)
2. All control point coordinates are shown in New Mexico State Coordinate System, West Zone (NAD83) horizontal datum.
3. All vertical elevations are based on NAVD88 vertical datum.
4. Yard elevations are to top of gravel surfacing.
5. Permanent slopes are 2:1, unless noted otherwise.
6. Seed and install erosion control blanket on permanent side slopes and other disturbed areas as directed by the COR.
7. Existing power pole and power lines to be relocated outside of the yard, north of the water storage tanks. See specificatons.
8. The yard high point elevation at the water storage tank identified on drawing assumes a steel tank supported on a ringwall foundation. If a concrete tank is provided and additional soil cover is required for frost protection, the finish grade elevation around the tank may be raised and shall be graded uniformaly between other site elevation callouts.
9. For Drawing Index, see (60396) and (60397).

0 30' 60'
Scale: 1" = 30'

RECLAMATION
Managing Water in the West

ALWAYS THINK SAFETY

U.S. DEPARTMENT OF THE INTERIOR
BUREAU OF RECLAMATION
NAVAJO-GALLUP WATER SUPPLY PROJECT
NEW MEXICO

SAN JUAN LATERAL
PUMPING PLANT NOS. 4 AND 7

Kevin O'Shea
DESIGNED
Kevin O'Shea
DRAWN
Brandon Jackson
CHECKED
TECH. APPR. Brandon Jackson, P.E.
APPROVED Alfred I. Bernstein
Peer Reviewer - Plant Structures Group

DENVER, CO 2020-01-24

PUMPING PLANT NO. 4 SITE AND GRADING PLAN

PLAN

1695-D-60403

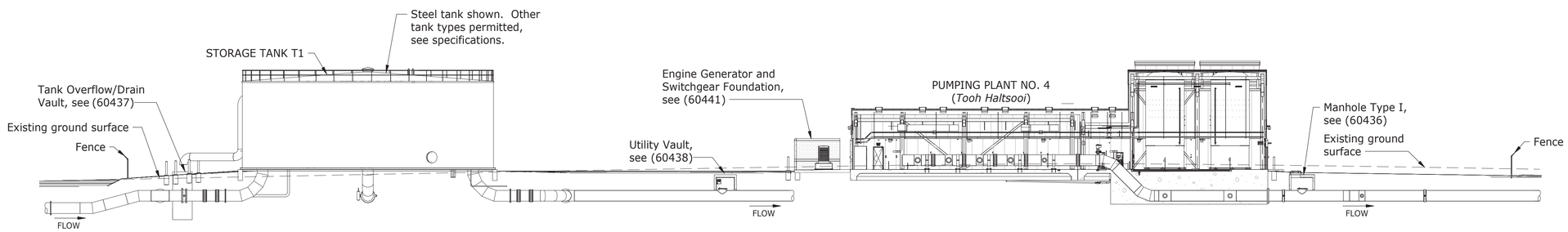

LONGITUDINAL SECTION THRU SERVICE YARD

Scale: 1" = 20'-0"

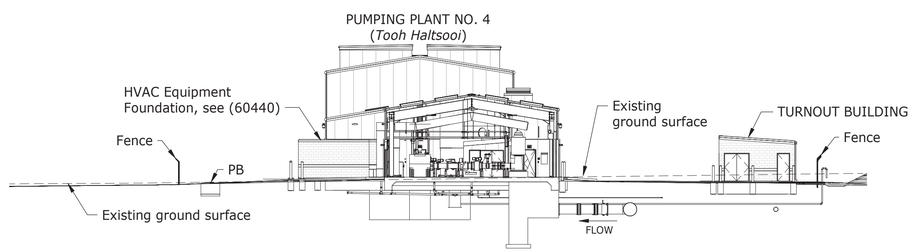

TRANSVERSE SECTION THRU SERVICE YARD

Scale: 1" = 20'-0"

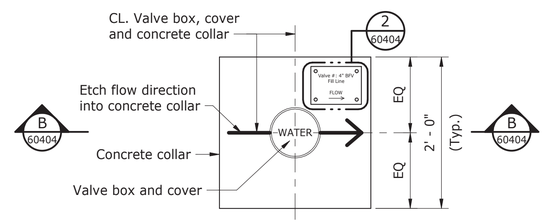

TYPICAL VALVE BOX - PLAN

Scale: 1" = 1'-0"

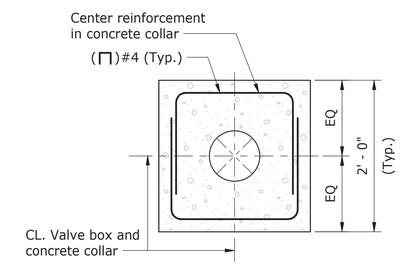

TYPICAL VALVE BOX - SECTIONAL PLAN

Scale: 1" = 1'-0"

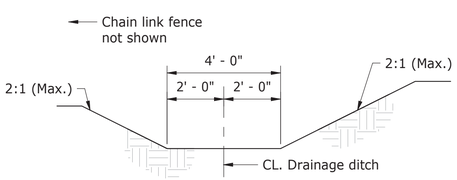

A SECTION - TYPICAL TRAPEZOIDIAL DRAINAGE DITCH

60403 (NTS)

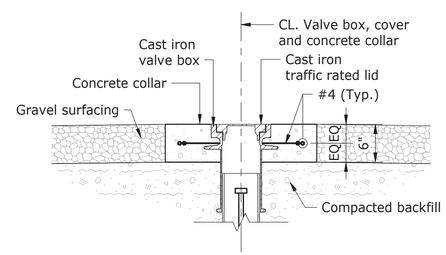

B TYPICAL VALVE BOX - SECTION

Scale: 1" = 1'-0"

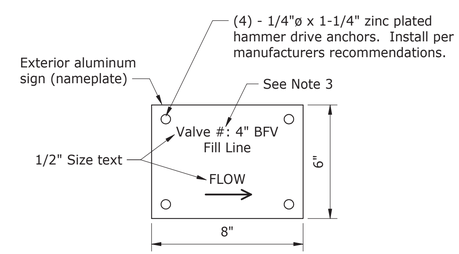

2 DETAIL

(NTS)

NOTES

1. For Notes and Abbreviations, see (60403).
2. For control point locations and coordinates, see (60403).
3. On nameplate, include:
   A. Valve identification number from Piping and Instrumentation Diagram.
   B. Valve size and type (i.e. 4" BFV).
   C. Valve location (i.e. fill line, drain line).

0 1' 2' Scale: 1" = 1'-0"

0 20' 40' Scale: 1" = 20'

RECLAMATION
Managing Water in the West

ALWAYS THINK **SAFETY**

U.S. DEPARTMENT OF THE INTERIOR
BUREAU OF RECLAMATION

NAVAJO-GALLUP WATER SUPPLY PROJECT
NEW MEXICO

SAN JUAN LATERAL
PUMPING PLANT NOS. 4 AND 7

Kevin O'Shea
DESIGNED
Kevin O'Shea
DRAWN
Brandon Jackson
CHECKED
TECH. APPR. Brandon Jackson, P.E.
APPROVED Alfred I. Bernstein
Peer Reviewer - Plant Structures Group

DENVER, CO 2020-01-24

PUMPING PLANT NO. 4 SITE AND GRADING PLAN

SECTIONS

1695-D-60404

SURVEY CONTROL POINT COORDINATES		
POINT	NORTHING	EASTING
CP1	1,729,202.60	2,454,362.60
CP2	1,729,149.26	2,454,198.16

NOTE: No grid correction factor has been applied

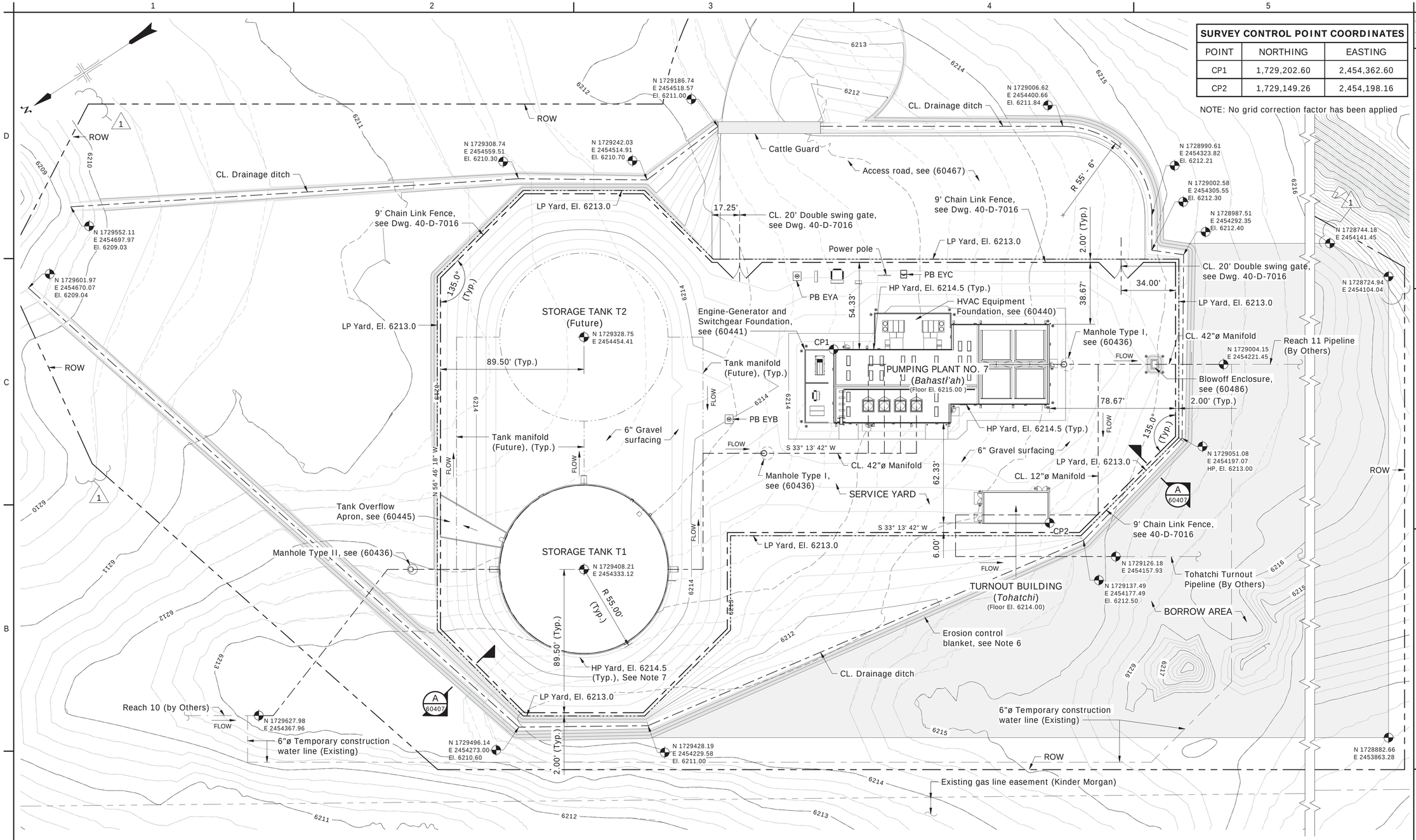

SITE AND GRADING PLAN

Scale: 1" = 30'-0"

LEGEND

	9' Chain Link Fence		Yard Extents
	Pipe Centerline		Finished Grade Contour Lines
	Right of Way (ROW)		Altered (Exisiting) Contour Lines
	Pipe (by Others)		Borrow Area Extents
	Future Features (by Others)		

ABBREVIATIONS

CL. Denotes centerline
CP Denotes field control point
HP Denotes high point
LP Denotes low point
PB Denotes pullbox
NAD Denotes North American Datum
Typ. Denotes Typical
ROW Denotes Right of Way
SIM. Denotes Similar

Pumping Plant No. 7	
Navajo Nation name	Bahastl'ah (Bah-hah-slah)
Meaning	Rounder inner corner; cove/"Twin Lakes"

NOTES

1. For Service Yard Surfacing Plan, See (60408)
2. All control point coordinates are shown in New Mexico State Coordinate System, West Zone (NAD83) horizontal datum.
3. All vertical elevations are based on NAVD88 vertical datum.
4. Yard elevations are to top of gravel surfacing.
5. Permanent slopes are 2:1, unless noted otherwise.
6. Seed and install erosion control blanket on permanent side slopes and other disturbed areas as directed by the COR.
7. Existing power pole and power lines to be relocated outside of the yard, north of the water storage tanks. See specificatons.
8. The yard high point elevation at the water storage tank identified on drawing assumes a steel tank supported on a ringwall foundation. If a concrete tank is provided and additional soil cover is required for frost protection, the finish grade elevation around the tank may be raised and shall be graded uniformaly between other site elevation callouts.
9. For Drawing Index, see (60396) and (60397).

0 30' 60'
Scale: 1" = 30'

RECLAMATION
Managing Water in the West

ALWAYS THINK SAFETY

U.S. DEPARTMENT OF THE INTERIOR
BUREAU OF RECLAMATION
NAVAJO-GALLUP WATER SUPPLY PROJECT
NEW MEXICO

SAN JUAN LATERAL
PUMPING PLANT NOS. 4 AND 7

REV NO	STA.	2020-02-24	Revised ROW boundry
1	D	Kevin O'Shea, P.E.	RC

Kevin O'Shea
DESIGNED
Kevin O'Shea
DRAWN
Brandon Jackson
CHECKED
Brandon Jackson, P.E.
TECH. APPR. Brandon Jackson, P.E.
Alfred I. Bernstein
APPROVED Alfred I. Bernstein
Peer Reviewer - Plant Structures Group

DENVER, CO 2020-01-24

PUMPING PLANT NO. 7
SITE AND GRADING PLAN

PLAN

1695-D-60406

RECLAMATION
Managing Water in the West

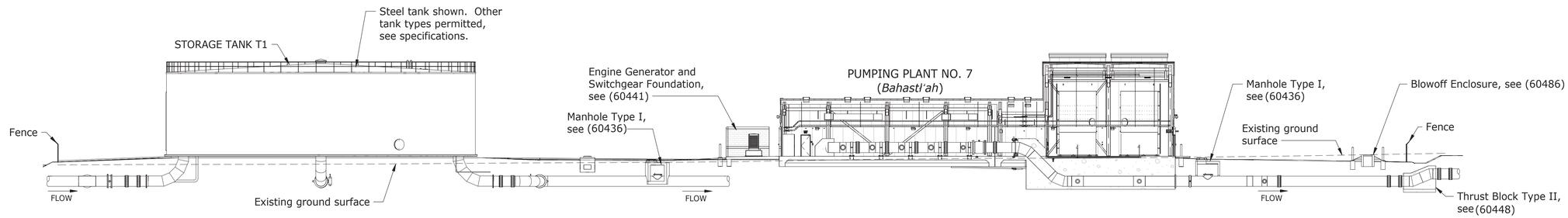

LONGITUDINAL SECTION THRU SERVICE YARD

Scale: 1" = 20'-0"

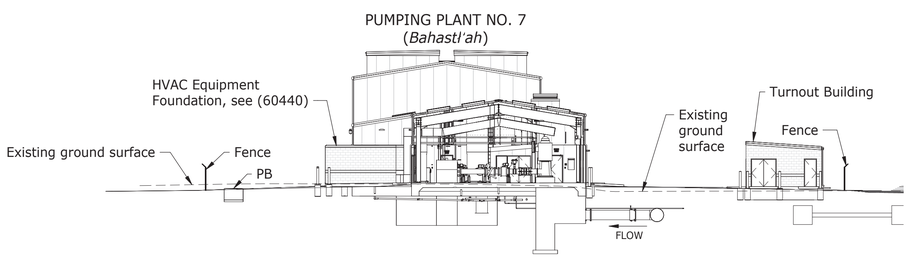

TRANSVERSE SECTION THRU SERVICE YARD

Scale: 1" = 20'-0"

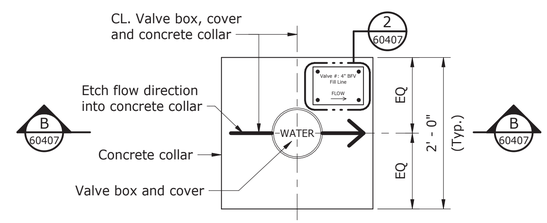

TYPICAL VALVE BOX - PLAN

Scale: 1" = 1'-0"

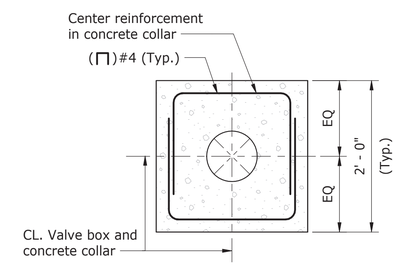

TYPICAL VALVE BOX - SECTIONAL PLAN

Scale: 1" = 1'-0"

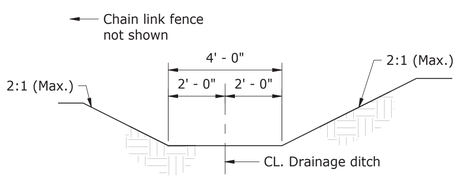

A 60406 SECTION - TYPICAL TRAPEZOIDIAL DRAINAGE DITCH

(NTS)

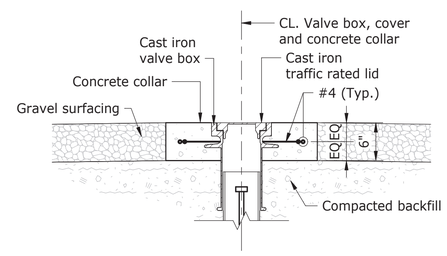

B 60407 TYPICAL VALVE BOX - SECTION

Scale: 1" = 1'-0"

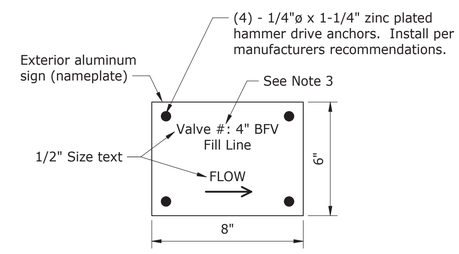

2 60407 DETAIL

(NTS)

NOTES

1. For Notes and Abbreviations, see (60406).
2. For control point locations and coordinates, see (60406).
3. On nameplate, include:
   A. Valve identification number from Piping and Instrumentation Diagram.
   B. Valve size and type (i.e. 4" BFV).
   C. Valve location (i.e. fill line, drain line).

0 1' 2' Scale: 1" = 1'-0"

0 20' 40' Scale: 1" = 20'

ALWAYS THINK **SAFETY**

U.S. DEPARTMENT OF THE INTERIOR
BUREAU OF RECLAMATION

NAVAJO-GALLUP WATER SUPPLY PROJECT
NEW MEXICO

SAN JUAN LATERAL
PUMPING PLANT NOS. 4 AND 7

Kevin O'Shea
DESIGNED
Kevin O'Shea
DRAWN
Brandon Jackson
CHECKED
TECH. APPR. Brandon Jackson, P.E.
APPROVED Alfred I. Bernstein
Peer Reviewer - Plant Structures Group

DENVER, CO 2020-01-24

PUMPING PLANT NO. 7 SITE AND GRADING PLAN

SECTIONS

1695-D-60407

RECLAMATION
Managing Water in the West

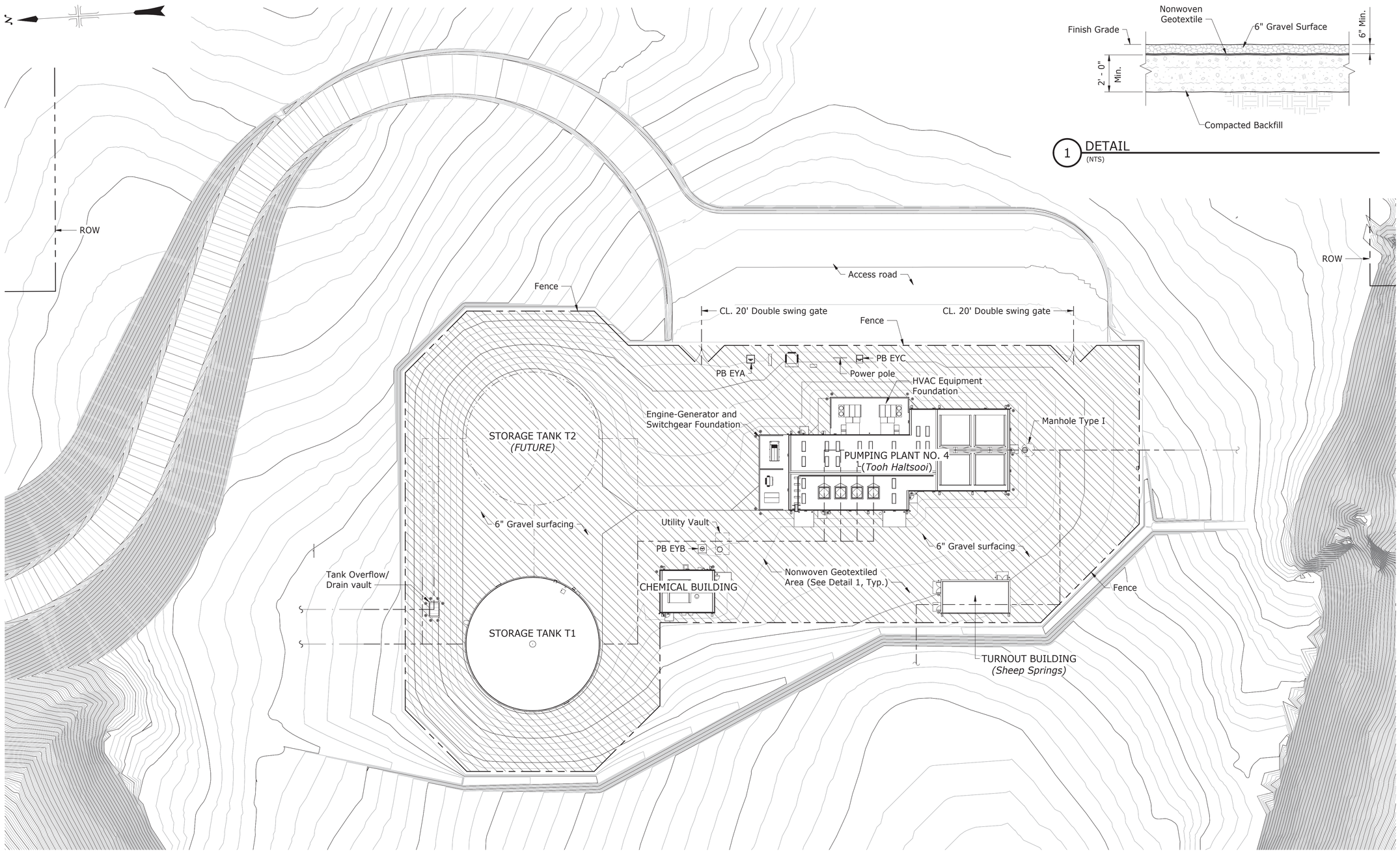

1 DETAIL
(NTS)

SERVICE YARD SURFACING PLAN

Scale: 1" = 30'-0"

NOTES

1. For locations of features, see (60403).
2. For Drawing Index, see (60396) and (60397).

0 30' 60'
Scale: 1" = 30'

ALWAYS THINK **SAFETY**

U.S. DEPARTMENT OF THE INTERIOR
BUREAU OF RECLAMATION
NAVAJO-GALLUP WATER SUPPLY PROJECT
NEW MEXICO
SAN JUAN LATERAL
PUMPING PLANT NOS. 4 AND 7

Kevin O'Shea
DESIGNED
Kevin O'Shea
DRAWN
Brandon Jackson
CHECKED
TECH. APPR. Brandon Jackson, P.E.
APPROVED Alfred I. Bernstein
Peer Reviewer - Plant Structures Group

DENVER, CO 2020-01-24

PUMPING PLANT NO. 4
SERVICE YARD
SURFACING

PLAN AND DETAILS

1695-D-60405

RECLAMATION
Managing Water in the West

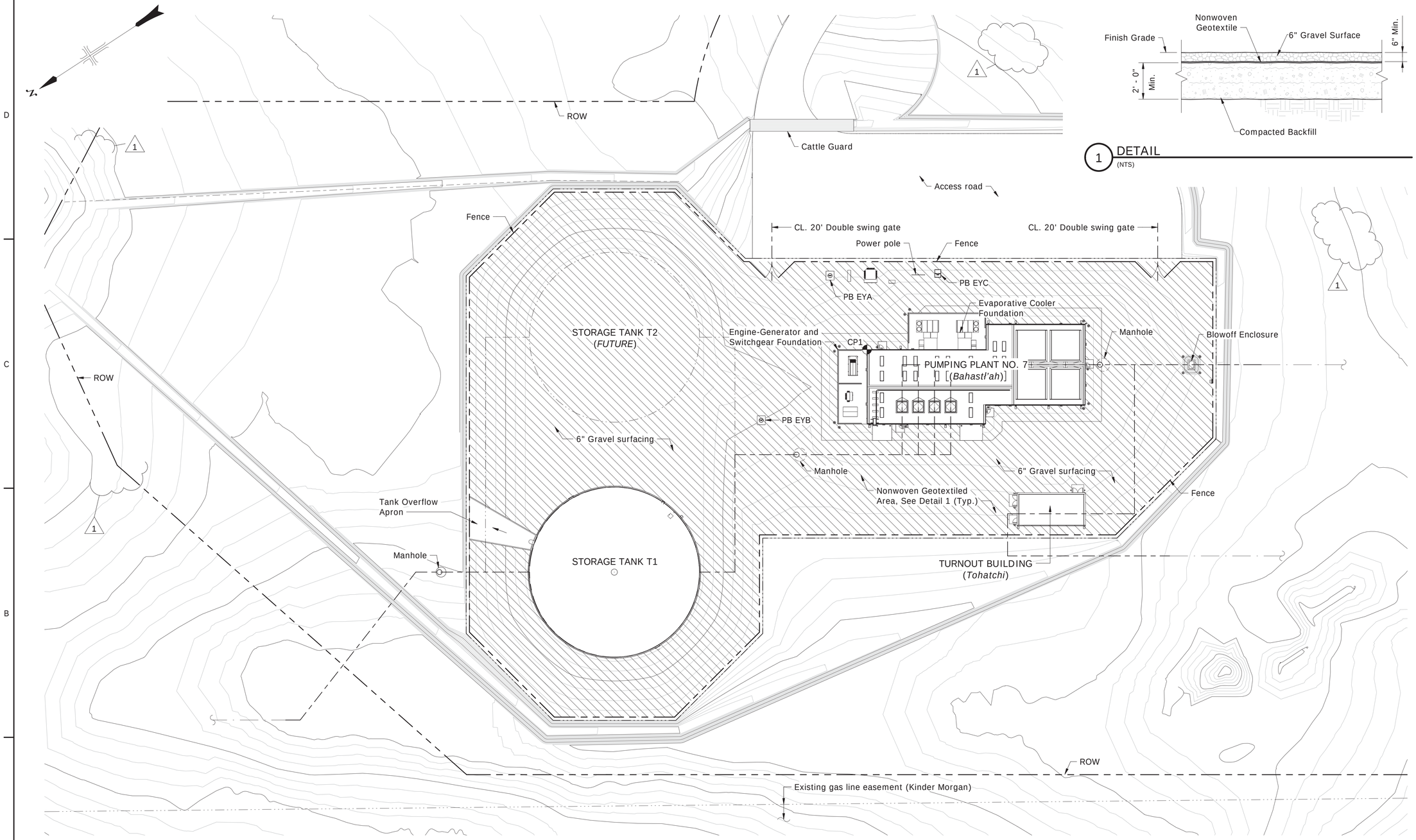

SERVICE YARD SURFACING PLAN

Scale: 1" = 30'-0"

1 DETAIL
(NTS)

NOTES

1. For locations of features, see (60406).
2. For Drawing Index, see (60396) and (60397).

0 30' 60'
Scale: 1" = 30'

ALWAYS THINK **SAFETY**

U.S. DEPARTMENT OF THE INTERIOR
BUREAU OF RECLAMATION
NAVAJO-GALLUP WATER SUPPLY PROJECT
NEW MEXICO

SAN JUAN LATERAL
PUMPING PLANT NOS. 4 AND 7

REV NO	STA	DATE		
1	D	2020-02-24	Kevin O'Shea, P.E.	Revised ROW boundry

Kevin O'Shea
DESIGNED
Kevin O'Shea
DRAWN
Brandon Jackson
CHECKED
Brandon Jackson, P.E.
TECH. APPR. Brandon Jackson, P.E.
Alfred I. Bernstein
APPROVED Alfred I. Bernstein
Peer Reviewer - Plant Structures Group

DENVER, CO 2020-01-24

PUMPING PLANT NO. 7 SERVICE YARD SURFACING

PLAN AND DETAILS

1695-D-60408

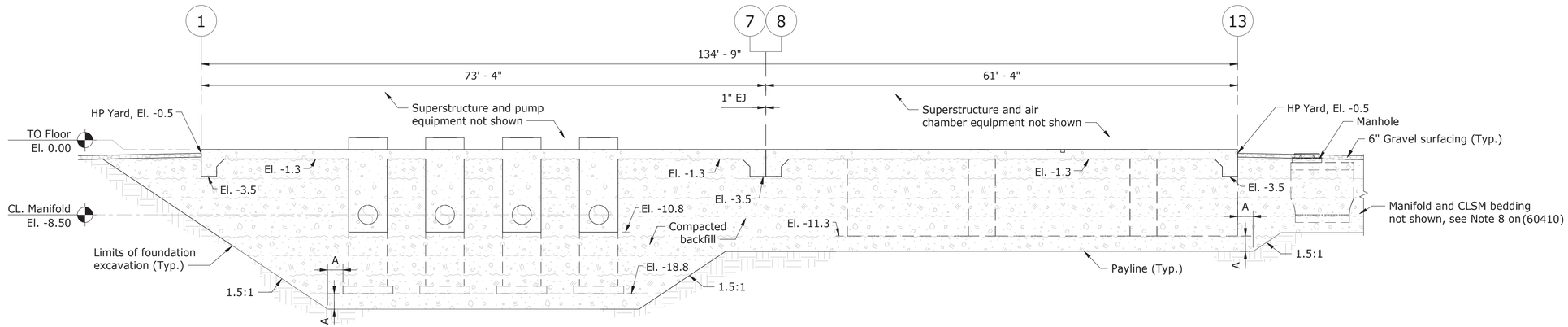

TYPICAL LONGITUDINAL SECTION - PUMPING PLANT AND AIR CHAMBERS

(NTS)

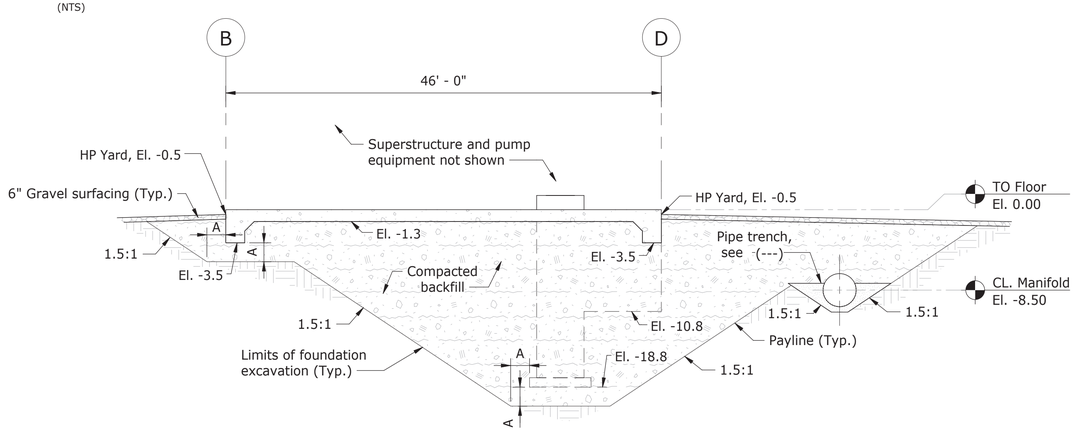

TYPICAL TRANSVERSE SECTION - PUMPING PLANT: PUMP ROOM

(NTS)

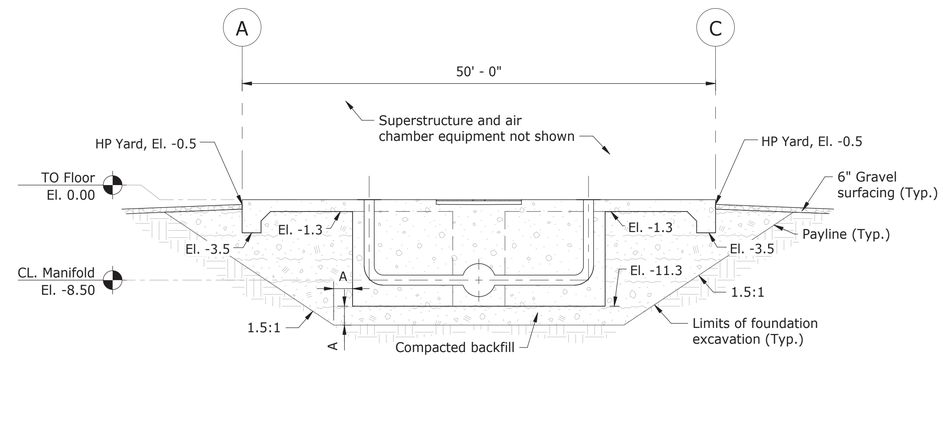

TYPICAL TRANSVERSE SECTION - PUMPING PLANT: AIR CHAMBER ROOM

(NTS)

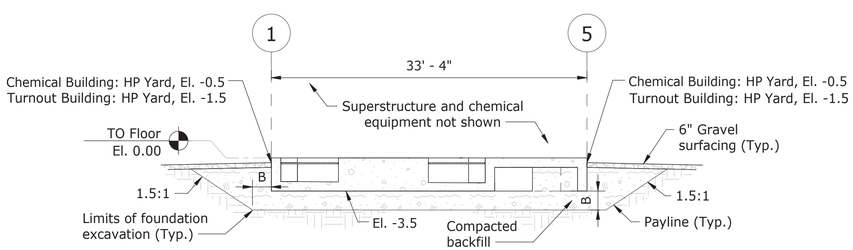

TYPICAL LONGITUDINAL SECTION - CHEMICAL BUILDING (TURNOUT BUILDING SIM.)

(NTS)

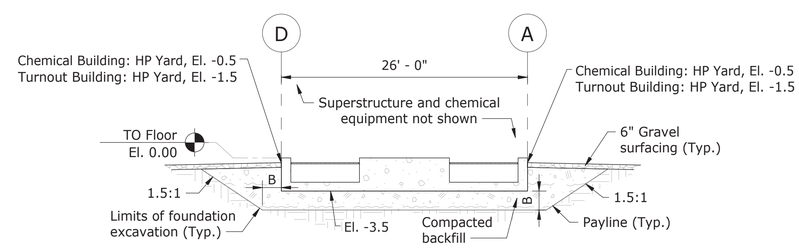

TYPICAL TRANSVERSE SECTION - CHEMICAL BUILDING (TURNOUT BUILDING SIM.)

(NTS)

STRUCTURAL EXCAVATION VARIABLES			
PUMPING PLANT	DATUM (FT)	EXCAVATION DIMENSIONS (FT)	
		A	B
PUMPING PLANT NO. 4	EL. 5867.50	2.0	2.0
PUMPING PLANT NO. 7	EL. 6215.00	2.0	2.0 (See Note 3)

NOTES:
1. All elevations are based on NAVD88 vertical datum.
2. The datum elevation(s) identified in the table correspond to the El. 0.0 elevation identified on the drawing. All elevations reported on the drawings are relative to the El. 0.0 elevation unless noted otherwise.
3. Dimension applies to the Pumping Plant No. 7 Turnout Building only.

NOTES

1. For locations of Pumping Plant No. 4 features, see (60403).
2. For locations of Pumping Plant No. 7 features, see (60406).
3. Sloping, shoring, and benching shall be in accordance with Reclamation Safety and Health Standards.
4. Excavation and backfill requirements for the precast concrete manholes are similar to those detailed for the flowmeter vault. See drawing 1695-D-60410.

RECLAMATION
Managing Water in the West

ALWAYS THINK SAFETY

U.S. DEPARTMENT OF THE INTERIOR
BUREAU OF RECLAMATION

NAVAJO-GALLUP WATER SUPPLY PROJECT
NEW MEXICO

SAN JUAN LATERAL
PUMPING PLANT NOS. 4 AND 7

Kevin O'Shea
DESIGNED
Kevin O'Shea
DRAWN
Brandon Jackson
CHECKED
TECH. APPR. Brandon Jackson, P.E.
APPROVED Alfred I. Bernstein
Peer Reviewer - Plant Structures Group

DENVER, CO 2020-01-24

STRUCTURAL EXCAVATION AND BACKFILL

TYPICAL SECTIONS

1695-D-60409

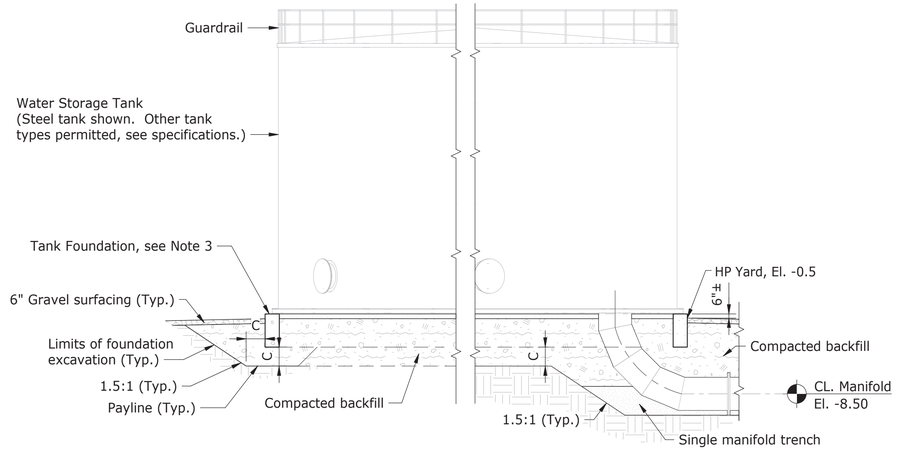

TYPICAL SECTION - WATER STORAGE TANK

(NTS)

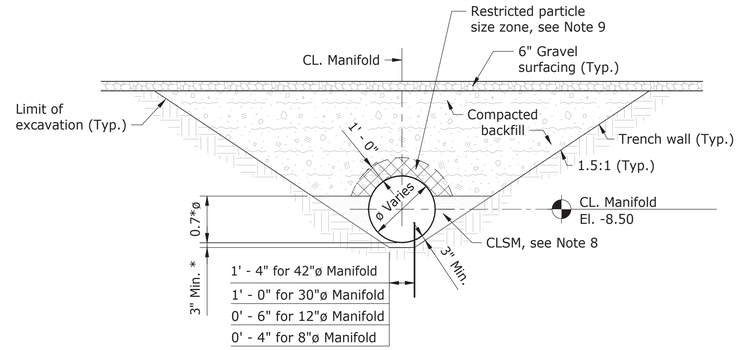

SINGLE MANIFOLD TRENCH

(NTS)

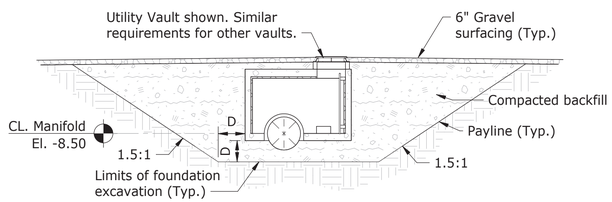

TYPICAL TRANSVERSE SECTION - UTILITY VAULT

(NTS)

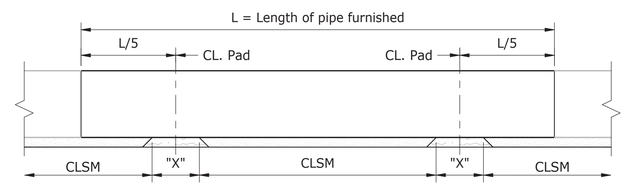

PIPE I.D.	"X"
12" - 27"	0.05L
30" - 66"	0.10L
69" - 114"	0.15L

NOTE: Soil pads allow observation of the CLSM flowing from one side of the pipe to the other. Other material may be submitted in lieu of soil pads for approval by COR. Soil pads shall not exceed the strength of the CLSM. Sand bags are not permitted.

CLSM INSTALLATION WITH SOIL PADS

(NTS)

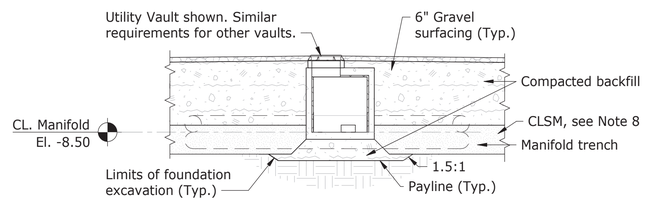

TYPICAL LONGITUDINAL SECTION - UTILITY VAULT

(NTS)

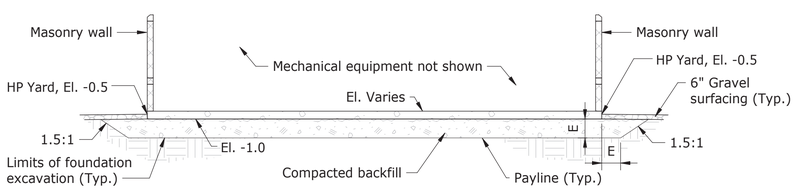

TYPICAL SECTION - EQUIPMENT FOUNDATION AND ENCLOSURE

(NTS)

STRUCTURAL EXCAVATION VARIABLES				
PUMPING PLANT	DATUM (FT)	EXCAVATION DIMENSIONS (FT)		
		C	D	E
PUMPING PLANT NO. 4	EL. 5867.50	2.0	2.0	2.0
PUMPING PLANT NO. 7	EL. 6215.00	2.0	2.0	2.0

NOTES:
1. All elevations are based on NAVD88 vertical datum.
2. The datum elevation(s) identified in the table correspond to the El. 0.0 elevation identified on the drawing. All elevations reported on the drawings are relative to the El. 0.0 elevation unless noted otherwise.

NOTES

1. For locations of Pumping Plant No. 4 features, see (60403).
2. For locations of Pumping Plant No. 7 features, see (60406).
3. The tank foundation (by others - Specifications Section 33 16 40) shown is conceptual. The tabulated excavation dimensions identified on this drawing are applicable to all shallow tank foundation types and are to be considered minimums.
4. Unless detailed otherwise, excavation requirements for all Precast Concrete Structures are similar to those detailed for the Precast Concrete Utility Vault.
5. Sloping, shoring, and benching shall be in accordance with Reclamation Safety and Health Standards.
6. Warning tape is not shown but is required, see Specifications.
7. Compact backfill for all yard pipe.
8. Suspend CLSM pipe bedding and use native pipe bedding material within the extents of the precast concrete structures such that the area directly below the vault remains free-draining.
9. Refer to Specifications Section 31 23 22 - Pipe Trench Earthwork for restricted particle size requirements.
10. PP Denotes pumping plant.
11. Dia. Denotes nominal pipe diameter.

RECLAMATION
Managing Water in the West

ALWAYS THINK **SAFETY**

U.S. DEPARTMENT OF THE INTERIOR
BUREAU OF RECLAMATION
NAVAJO-GALLUP WATER SUPPLY PROJECT
NEW MEXICO
SAN JUAN LATERAL
PUMPING PLANT NOS. 4 AND 7

Kevin O'Shea
DESIGNED
Kevin O'Shea
DRAWN
Brandon Jackson
CHECKED
TECH. APPR. Brandon Jackson, P.E.
APPROVED Alfred I. Bernstein
Peer Reviewer - Plant Structures Group

DENVER, CO 2020-01-24

STRUCTURAL AND PIPE TRENCH EXCAVATION AND BACKFILL

TYPICAL SECTIONS

1695-D-60410

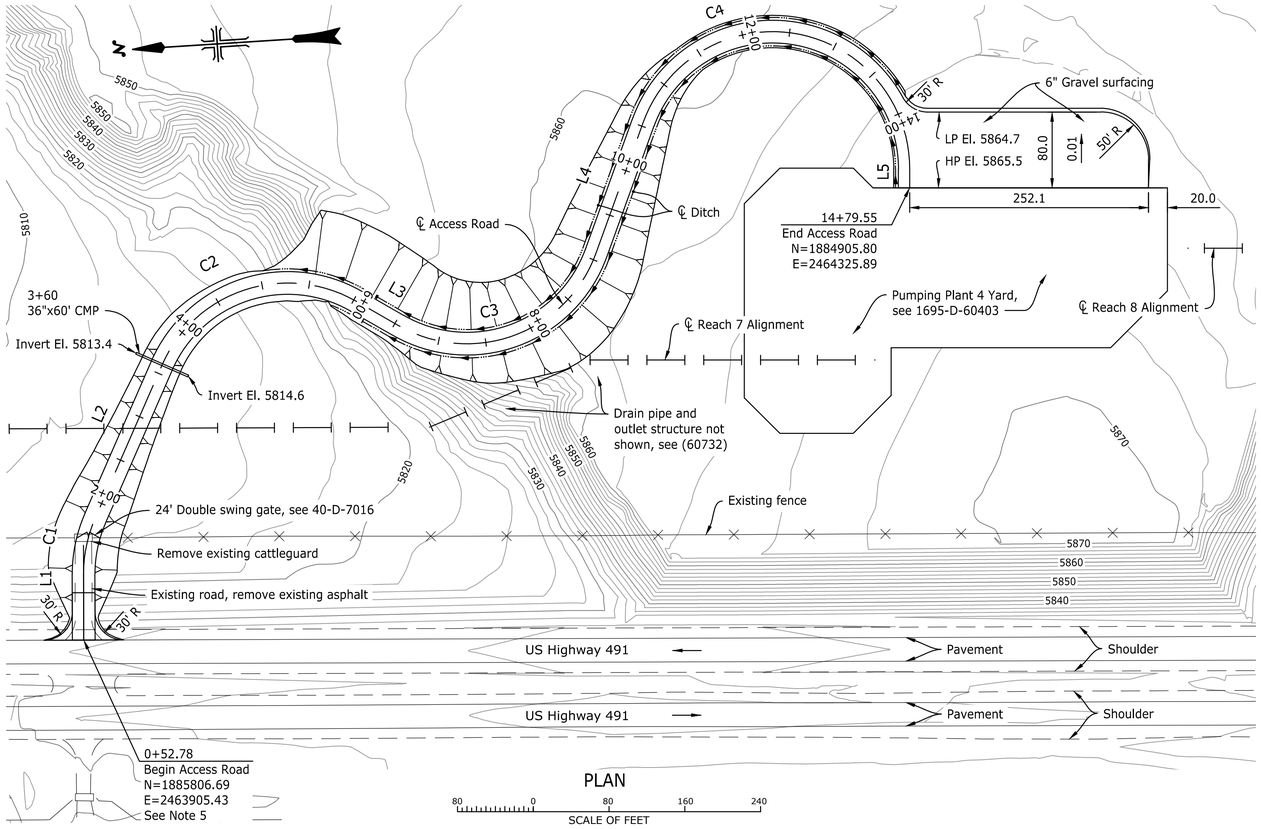

PLAN

SCALE OF FEET

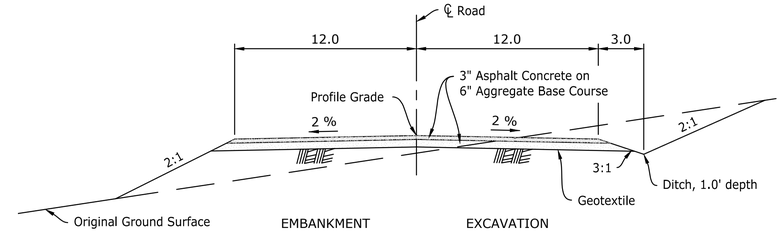

TYPICAL SECTION

0+00 TO 0+50
NO SCALE

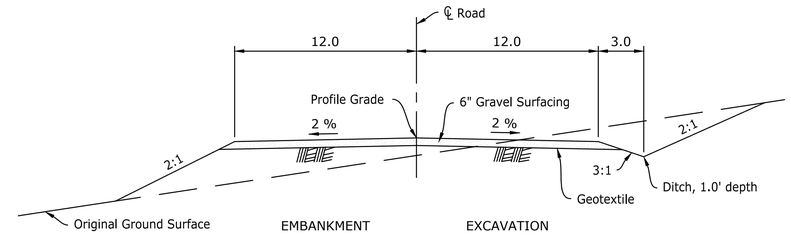

TYPICAL SECTION

0+50 TO END
NO SCALE

ALIGNMENT CURVE DATA								
CURVE	BC STA.	PI STA.	EC STA.	LENGTH	RADIUS	DELTA	TANGENT	CHORD
C1	1+22.33	1+52.78	1+82.36	60.02	145.00	23°43'02"	30.45	59.59
C2	3+59.02	5+20.86	6+02.69	243.67	145.00	96°16'58"	161.84	215.99
C3	6+54.53	8+27.33	9+07.60	253.07	145.00	100°00'00"	172.80	222.15
C4	10+54.21	18+83.96	14+59.57	405.36	145.00	160°10'31"	829.75	285.67

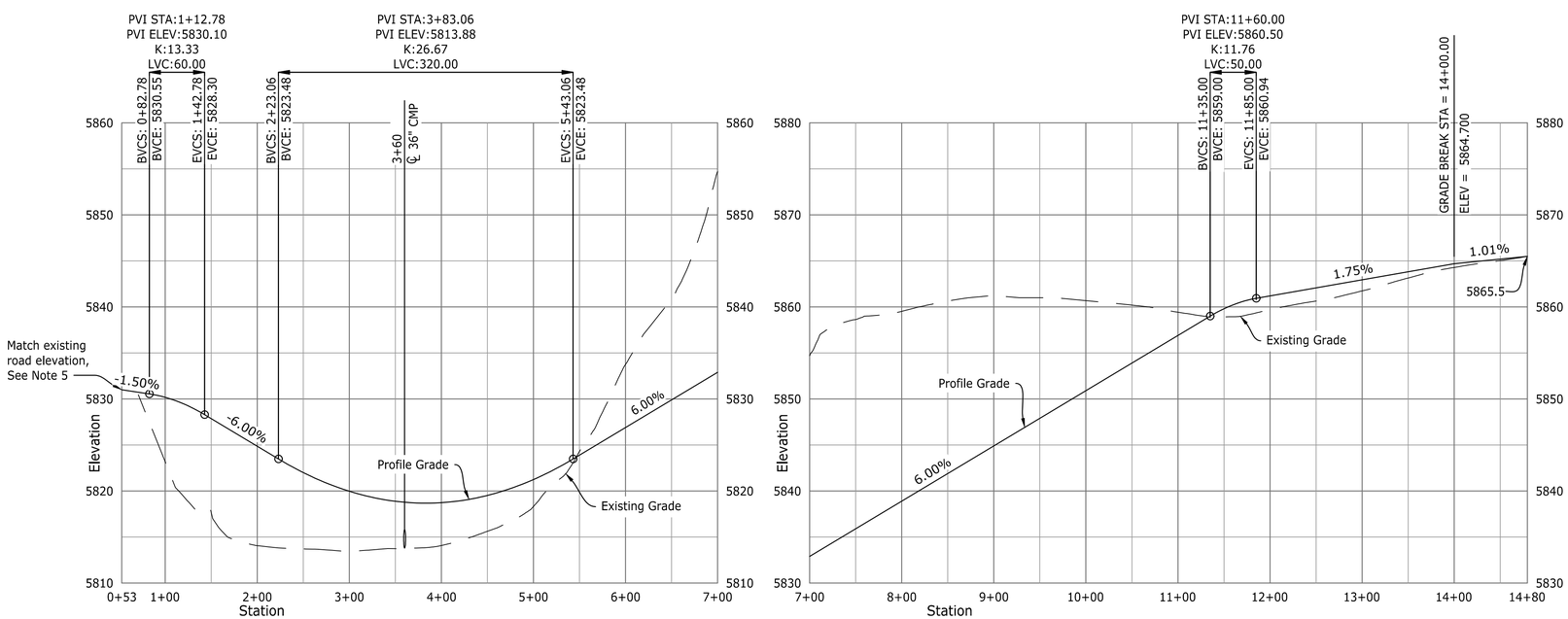

ACCESS ROAD PROFILE

ALIGNMENT LINE DATA				
LINE #	START STA	END STA	LENGTH	BEARING
L1	0+52.78	1+22.33	69.55	S86° 30' 00.01"E
L2	1+82.36	3+59.02	176.67	S62° 46' 57.68"E
L3	6+02.69	6+54.53	51.84	S33° 30' 00.00"W
L4	9+07.60	10+54.21	146.61	S66° 30' 00.00"E
L5	14+59.57	14+79.55	19.99	N86° 19' 29.33"W

NOTES

1. Design speed 20 mph.
2. Culvert details may be adjusted in the field to match existing conditions. Culvert must have at least one foot of cover and maintain at least a 0.02 slope to drain.
3. Install traffic delineators along edges of road at 100-ft spacing on tangents and 30-ft spacing on curves. Traffic delineators shall be single white reflector on tubular flexible post as shown on New Mexico Department of Transportation Standard Drawing 703-01 sheets 1 thru 3.
4. Prior to substantial completion, repair, regrade, and surface roadway as directed by COR.
5. Location of new US 491 lanes is approximate. Field verify location and elevation of intersection and adjust as directed by COR. Do not exceed 6.00% maximum road grade.

ABBREVIATIONS

BVCE	Begin vertical curve elevation
BVCS	Begin vertical curve station
CMP	Corrugated metal pipe
EVCE	End vertical curve elevation
EVCS	End vertical curve station
HP	High point
K	Rate of vertical curve curvature
LP	Low point
LVC	Length of vertical curve
PVI	Point of vertical intersection

RECLAMATION
Managing Water in the West

ALWAYS THINK SAFETY

U.S. DEPARTMENT OF THE INTERIOR
BUREAU OF RECLAMATION
NAVAJO-GALLUP WATER SUPPLY PROJECT
NEW MEXICO

SAN JUAN LATERAL

PUMPING PLANT NOS. 4 AND 7

REV NO	DATE	BY	DESCRIPTION
D 2	2020-06-01	Leavitt, Mark E P.E.	ADDED NEW US HIGHWAY 491 LANES. REVISED ALIGNMENT AND INTERSECTION AT US 491. ADDED NOTE 5.
D 1	2019-12-12	MARK LEAVITT, P.E.	GENERAL REVISIONS.

Mark Leavitt
DESIGNED
Mark Leavitt
DRAWN
Clark Larsen
CHECKED
Leavitt, Mark E P.E.
TECH. APPR.
Clough, Nicholas W P.E.
APPROVED
ADMIN APPROVAL - Civil Engineer

DENVER, CO 2018-08-08

PUMPING PLANT NO. 4
ACCESS ROAD

PLAN, PROFILE, AND SECTION

1695-D-60466

SHEET 1

Released

LAST SAVED DATE 2019-12-12
LAST SAVED BY MLEAVITT

CAD SYSTEM AutoCAD Civil 3D
CAD FILENAME 1695-D-60466-RD-1.DWG

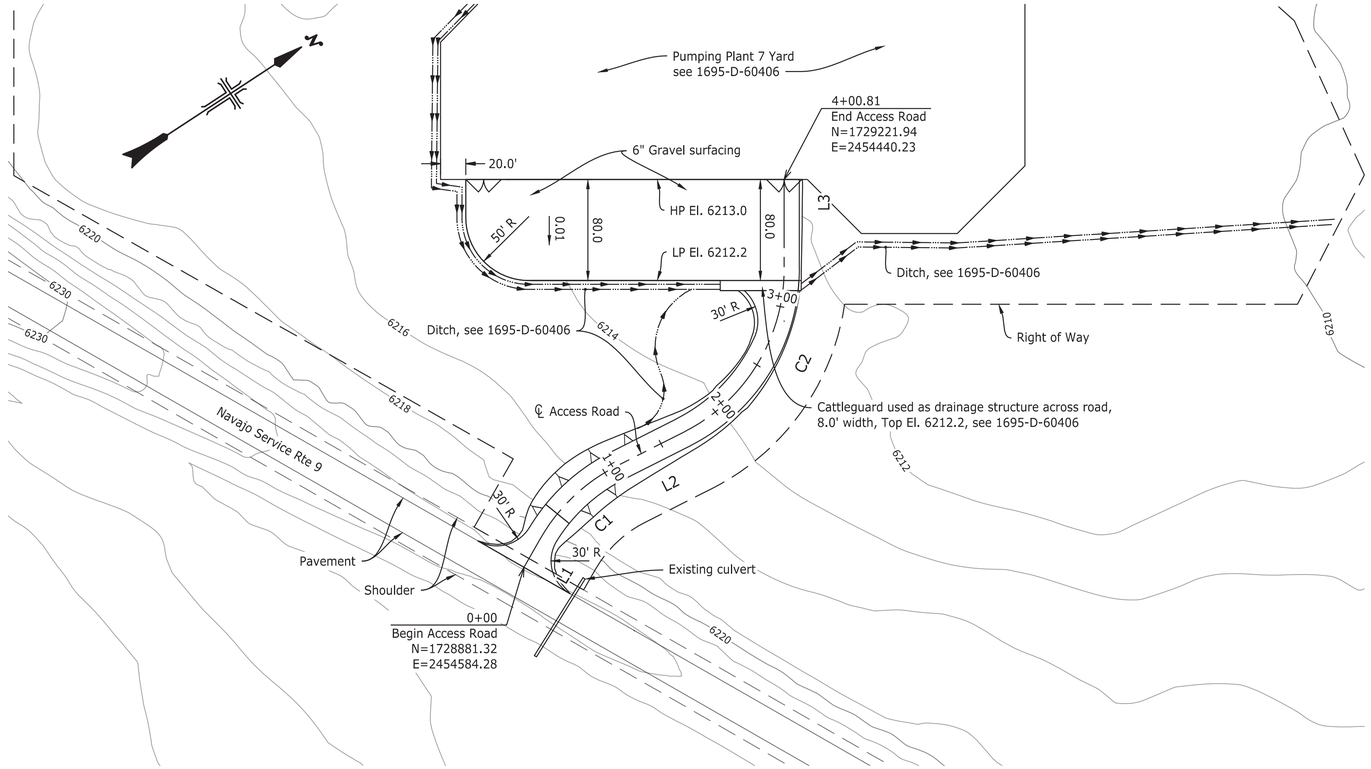

PLAN

SCALE OF FEET

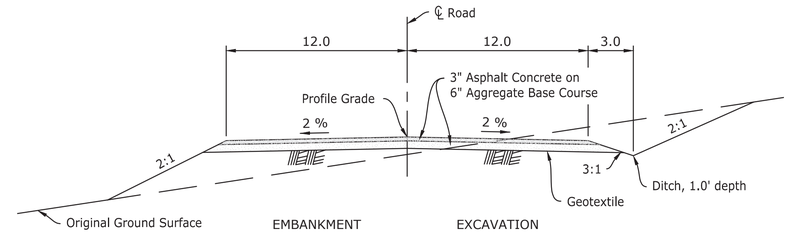

TYPICAL SECTION

0+00 TO 0+50

NO SCALE

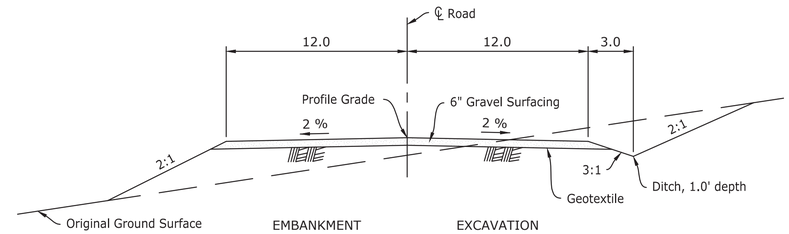

TYPICAL SECTION

0+50 TO END

NO SCALE

ALIGNMENT CURVE DATA								
CURVE	BC STA.	PI STA.	EC STA.	LENGTH	RADIUS	DELTA	TANGENT	CHORD
C1	0+26.50	0+70.00	1+11.03	84.53	145.00	33°24'06"	43.50	83.34
C2	1+70.06	2+59.30	3+30.06	160.00	145.00	63°13'29"	89.25	152.01

ALIGNMENT LINE DATA				
LINE #	START STA	END STA	LENGTH	BEARING
L1	0+00.00	0+26.50	26.50	N26° 56' 55.21"W
L2	1+11.03	1+70.06	59.03	N6° 27' 10.77"E
L3	3+30.06	4+00.81	70.75	N56° 46' 18.34"W

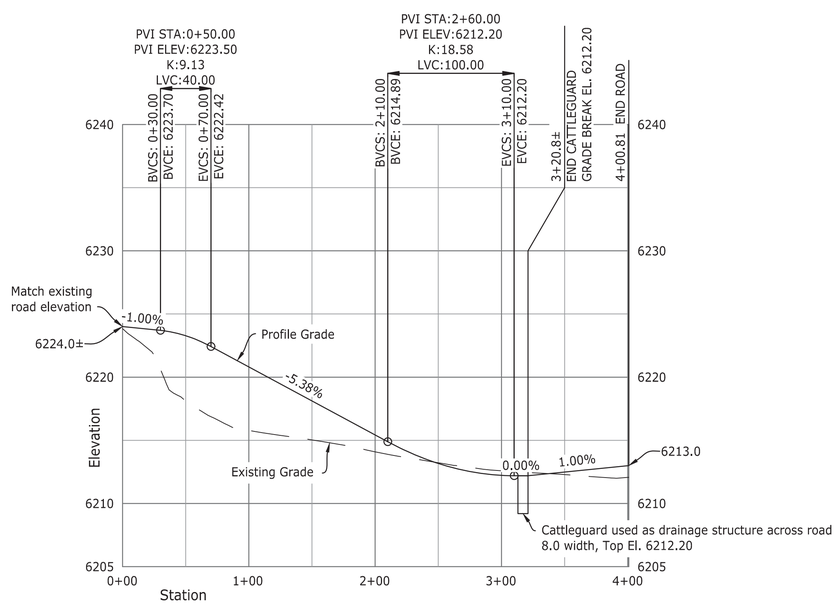

PROFILE

NOTES

1. Design speed 20 mph.
2. Install traffic delineators along edges of road at 100-ft spacing on tangents and 30-ft spacing on curves. Traffic delineators shall be single white reflector on tubular flexible post as shown on New Mexico Department of Transportation Standard Drawing 703-01 sheets 1 thru 3.

ABBREVIATIONS

BVCE	Begin vertical curve elevation
BVCS	Begin vertical curve station
CMP	Corrugated metal pipe
EVCE	End vertical curve elevation
EVCS	End vertical curve station
HP	High point
K	Rate of vertical curve curvature
LP	Low point
LVC	Length of vertical curve
PVI	Point of vertical intersection

RECLAMATION
Managing Water in the West

ALWAYS THINK SAFETY

U.S. DEPARTMENT OF THE INTERIOR
BUREAU OF RECLAMATION
NAVAJO-GALLUP WATER SUPPLY PROJECT
NEW MEXICO

SAN JUAN LATERAL

PUMPING PLANT NOS. 4 AND 7

REV NO		
1.2	2020-02-27 Clough, Nicholas W P.E.	D REVISED RIGHT OF WAY.

Mark Leavitt
DESIGNED
Mark Leavitt
DRAWN
Clark Larsen
CHECKED
Leavitt, Mark E P.E.
TECH. APPR.
Clough, Nicholas W P.E.
APPROVED
ADMIN APPROVAL - Civil Engineer

DENVER, CO 2018-08-08

PUMPING PLANT NO. 7
ACCESS ROAD

PLAN, PROFILE, AND
SECTION

1695-D-60467

SHEET 1

Released

LAST SAVED DATE
2020-02-27
LAST SAVED BY
MLEAVITT

CAD SYSTEM
AutoCAD Civil 3D
CAD FILENAME
1695-D-60467-RD-1.DWG

RECLAMATION
Managing Water in the West

SYMBOLS

BUILDING ELEVATION SYMBOL
INDICATES ELEVATION NUMBER
INDICATES SHEET NUMBER

BUILDING SECTION SYMBOL
INDICATES SECTION NUMBER
INDICATES SHEET NUMBER
"SIM" INDICATES SIMILAR SECTION

DETAIL SECTION SYMBOL
INDICATES SECTION NUMBER
INDICATES SHEET NUMBER
"SIM" INDICATES SIMILAR DETAIL

DETAIL CALLOUT SYMBOL
INDICATES DETAIL NUMBER
INDICATES SHEET NUMBER
"SIM" INDICATES SIMILAR DETAIL

INTERIOR ELEVATION SYMBOL
INDICATES ELEVATION NUMBER
INDICATES SHEET NUMBER

ROOM NAME

101 — ROOM NAME AND NUMBER

1 — BUILDING LINE SYMBOL

101 — DOOR SYMBOL

A — WINDOW OR LOUVER SYMBOL

T.O. CONC WALL ELEVATION — VERTICAL OR SPOT ELEVATION

ABBREVIATIONS

AC	AIR CHAMBER
APPROX.	APPROXIMATE
ARCH.	ARCHITECTURAL
ASHRAE	AMERICAN SOCIETY OF HEATING, REFRIGERATING AND AIR-CONDITIONING ENGINEERS
B.O.	BOTTOM OF
CB	CHEMICAL BUILDING
C.I.	CONTINUOUS INSULATION
℄	CENTER LINE
CMU	CONCRETE MASONRY UNIT(S)
CONC.	CONCRETE
DS	DOWNSPOUT
DWG.	DRAWING
EJ	EXPANSION JOINT
EL.	ELEVATION
EQ.	EQUAL
EVAP.	EVAPORATIVE
FACP	FIRE ALARM CONTROL PANEL
FRP	FIBERGLASS REINFORCED PLASTIC
IBC	INTERNATIONAL BUILDING CODE (2015)
IFC	INTERNATIONAL FIRE CODE (2015)
LCP	LIGHTING CONTROL PANEL
MAT'L	MATERIAL
MIN.	MINIMUM
O.D.	OUTSIDE DIAMETER
PP	PUMPING PLANT
QUANT.	QUANTITY
REF.	REFERENCE
SB	SPLASH BLOCK
SF	SQUARE FEET
SIM.	SIMILAR
THK	THICKNESS
THRHLD	THRESHOLD
T.O.	TOP OF
TYP.	TYPICAL

GENERAL NOTES

1. SEE (60396) AND (60397) FOR DRAWING INDEX.
2. SEE (60403) FOR PUMPING PLANT NO. 4 SITE PLAN.
3. SEE (60406) FOR PUMPING PLANT NO. 7 SITE PLAN.
4. SEE (60411) FOR PUMPING PLANT GENERAL ARRANGEMENT.
5. SEE (60428) FOR CHEMICAL BUILDING GENERAL ARRANGEMENT.
6. SEE (60435) FOR TURNOUT BUILDING GENERAL ARRANGEMENT.
7. ALL DIMENSIONS SHOWN ON DRAWINGS ARE TO FACE OF BUILDING GIRT, FACE OF STUD, FACE OF CMU, FACE OF CONCRETE, CENTERLINE OF COLUMN, CENTERLINE OF DOOR, CENTERLINE OF WINDOW OR LOUVER, EDGE OF DOOR FRAME, OR EDGE OF WINDOW OR LOUVER FRAME, UNLESS OTHERWISE NOTED ON DRAWING.
8. DO NOT USE METAL WALL OR ROOF PANELS AS SUPPORTS FOR CONDUIT, DUCTWORK, PIPING, PENETRATIONS, WINDOWS, DOORS, LOUVERS, OR SUPPORTS FOR ANY ITEMS ATTACHED TO THE INTERIOR OR EXTERIOR OF THE BUILDING. ALL ITEMS MUST BE INDEPENDENTLY SUPPORTED BY OTHER MEANS. FIELD CUTTING PENETRATIONS MUST BE PERFORMED AS RECOMMENDED BY THE PANEL MANUFACTURER. ALL PENETRATIONS MUST BE PROPERLY WEATHER SEALED TO ENSURE A WEATHER-TIGHT BUILDING ENVELOPE.
9. DETAILS SHOWN ON DRAWINGS MAY REQUIRE ADJUSTMENTS TO ACCOMMODATE METAL WALL OR ROOF PANEL MANUFACTURER'S STANDARD DETAILS. CONTRACTOR SHALL COORDINATE WITH PANEL MANUFACTURER AND SUBMIT ACCEPTABLE DETAILS FOR APPROVAL PRIOR TO CONSTRUCTION.
10. ALL SEALANTS, GASKETS, AND SEALING MATERIALS MAY NOT BE SHOWN, BUT SHALL BE APPLIED AS RECOMMENDED AND REQUIRED BY THE WALL AND ROOF PANEL MANUFACTURER TO ENSURE A WEATHER-TIGHT BUILDING ENVELOPE.
11. ALL NECESSARY EXPANSION JOINTS FOR WALL AND ROOF PANELS MAY NOT SHOWN ON DRAWINGS. EXPANSION JOINTS SHALL BE PROVIDED PER MANUFACTURER'S RECOMMENDATIONS.
12. MECHANICAL, ELECTRICAL, PLUMBING, STRUCTURAL, AND SITE INFORMATION SHOWN ON ARCHITECTURAL DRAWINGS IS PROVIDED FOR CLARITY AND/OR GENERAL LOCATION PURPOSES ONLY. ALL ELEMENTS MAY NOT BE SHOWN ON ARCHITECTURAL DRAWINGS. SEE MECHANICAL, ELECTRICAL, PLUMBING, STRUCTURAL, AND SITE WORK DRAWINGS FOR ADDITIONAL INFORMATION.
13. ROOM AND DOOR NUMBERS SHOWN ON DRAWINGS ARE FOR CONSTRUCTION PURPOSES ONLY.
14. ROOF AND GUTTER DE-ICING SYSTEM NOT SHOWN ON DRAWINGS. SEE SPECIFICATIONS SECTION 07 41 13.

ALWAYS THINK **SAFETY**

U.S. DEPARTMENT OF THE INTERIOR
BUREAU OF RECLAMATION
NAVAJO-GALLUP WATER SUPPLY PROJECT
NEW MEXICO

SAN JUAN LATERAL
PUMPING PLANT NOS. 4 AND 7

C. TOBIN
DESIGNED
C. TOBIN
DRAWN
KEVIN O'SHEA
CHECKED
TECH. APPR. KEVIN O'SHEA, P.E.
APPROVED ALFRED I. BERNSTEIN
Peer Reviewer - PLANT STRUCTURES GROUP

DENVER, CO 2020-01-24

ARCHITECTURAL

GENERAL NOTES, SYMBOLS, AND ABBREVIATIONS

1695-D-60366

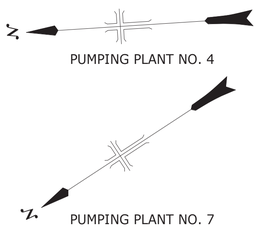

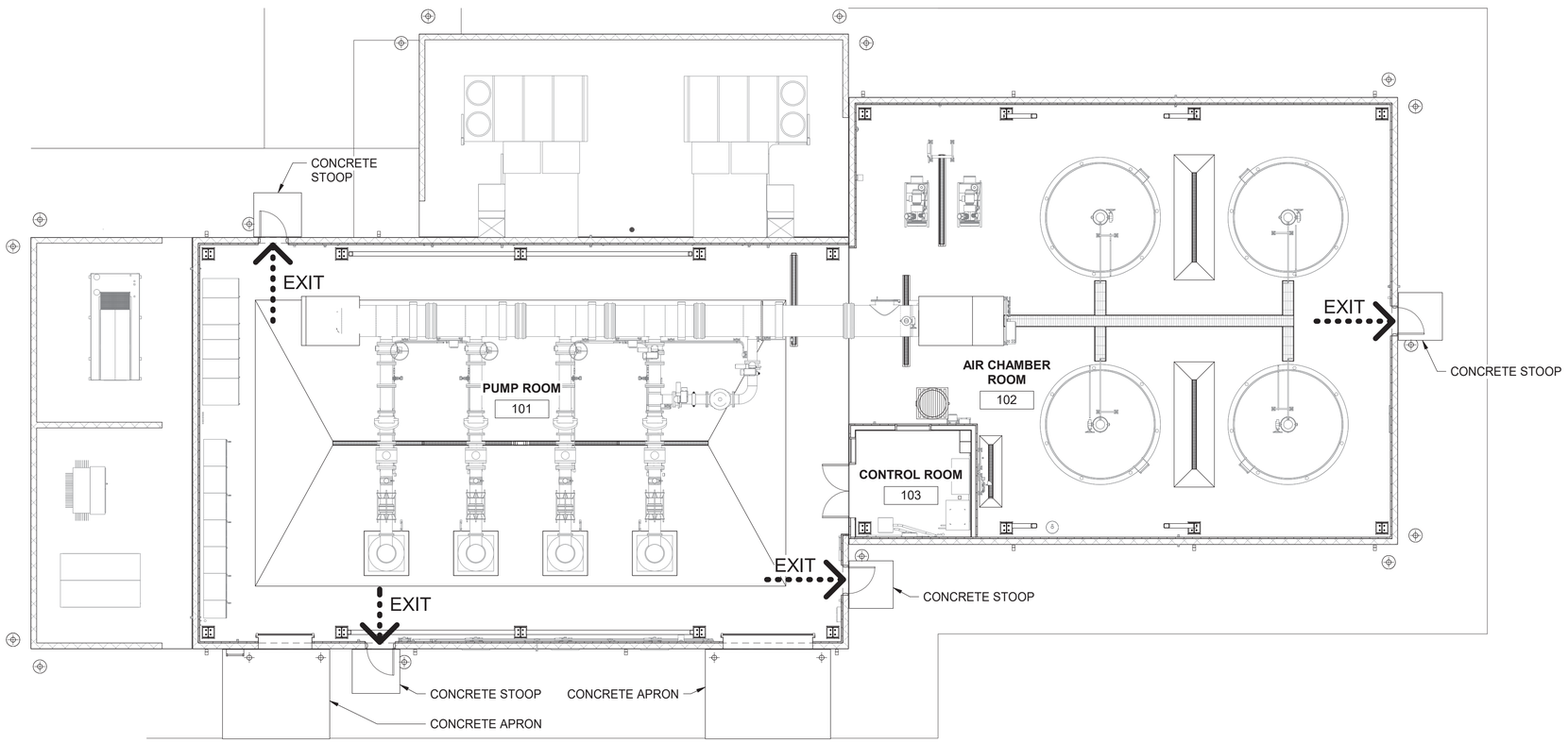

1 LIFE SAFETY PLAN - PUMPING PLANT

BUILDING CODE SUMMARY - PUMPING PLANT

ALL WORK TO COMPLY WITH THE 2015 INTERNATIONAL BUILDING CODE (IBC)

OCCUPANCY TYPE:
MODERATE-HAZARD FACTORY INDUSTRIAL GROUP F-1 (IBC 306.2)

CONSTRUCTION TYPE: V-B (IBC 602.5)

ALLOWABLE AREA: 8,500 SF (IBC TABLE 506.2)
ACTUAL AREA: 6,445 SF (CALCULATED AS DEFINED PER IBC 502.1)

ALLOWABLE HEIGHT: 40 FEET, 1 STORY (IBC TABLES 504.3 AND 504.4)
ACTUAL HEIGHT: 34 FEET-8 INCHES, 1 STORY (CALCULATED AS DEFINED PER IBC 502.1)

OCCUPANT LOAD (IBC TABLE 1004.1.2):
6,445 SF "INDUSTRIAL AREAS" / 100 GROSS = 65 TOTAL OCCUPANT LOAD

REQUIRED NUMBER OF EXITS: TWO (IBC TABLES 1006.2.1 AND 1006.3.1)
NUMBER OF EXITS PROVIDED: FOUR

FIRE RESISTANCE RATINGS (IBC TABLE 601):
PRIMARY STRUCTURAL FRAME: 0 HOURS
BEARING WALLS (EXTERIOR AND INTERIOR): 0 HOURS
NONBEARING WALLS AND PARTITIONS, EXTERIOR: 0 HOURS (IBC TABLE 602)
NONBEARING WALLS AND PARTITIONS, INTERIOR: 0 HOURS
FLOOR CONSTRUCTION AND ASSOCIATED SECONDARY MEMBERS: 0 HOURS
ROOF CONSTRUCTION AND ASSOCIATED SECONDARY MEMBERS: 0 HOURS

PLUMBING FIXTURES: NOT PROVIDED (IBC 2902.1)

CLIMATE ZONE (ASHRAE 90.1): 5B
INSULATION VALUES:
ROOF (INSULATION ENTIRELY ABOVE DECK): R-30 C.I. MIN.
WALLS, ABOVE GRADE (METAL BUILDING): R-19 C.I. MIN.
WALLS, ABOVE GRADE (MASS): R-11.4 C.I. MIN.

NOTES

1. SEE (60366) FOR ARCHITECTURAL GENERAL NOTES, SYMBOLS, AND ABBREVIATIONS.

0 4' 8' 16'

RECLAMATION
Managing Water in the West

ALWAYS THINK **SAFETY**

U.S. DEPARTMENT OF THE INTERIOR
BUREAU OF RECLAMATION
NAVAJO-GALLUP WATER SUPPLY PROJECT
NEW MEXICO
SAN JUAN LATERAL
PUMPING PLANT NOS. 4 AND 7

C. TOBIN
DESIGNED
C. TOBIN
DRAWN
KEVIN O'SHEA
CHECKED
TECH. APPR. KEVIN O'SHEA, P.E.
APPROVED ALFRED I. BERNSTEIN
Peer Reviewer - PLANT STRUCTURES GROUP

DENVER, CO 2020-01-24

PUMPING PLANT ARCHITECTURAL

BUILDING CODE SUMMARY AND LIFE SAFETY PLAN

1695-D-60367

RECLAMATION
Managing Water in the West

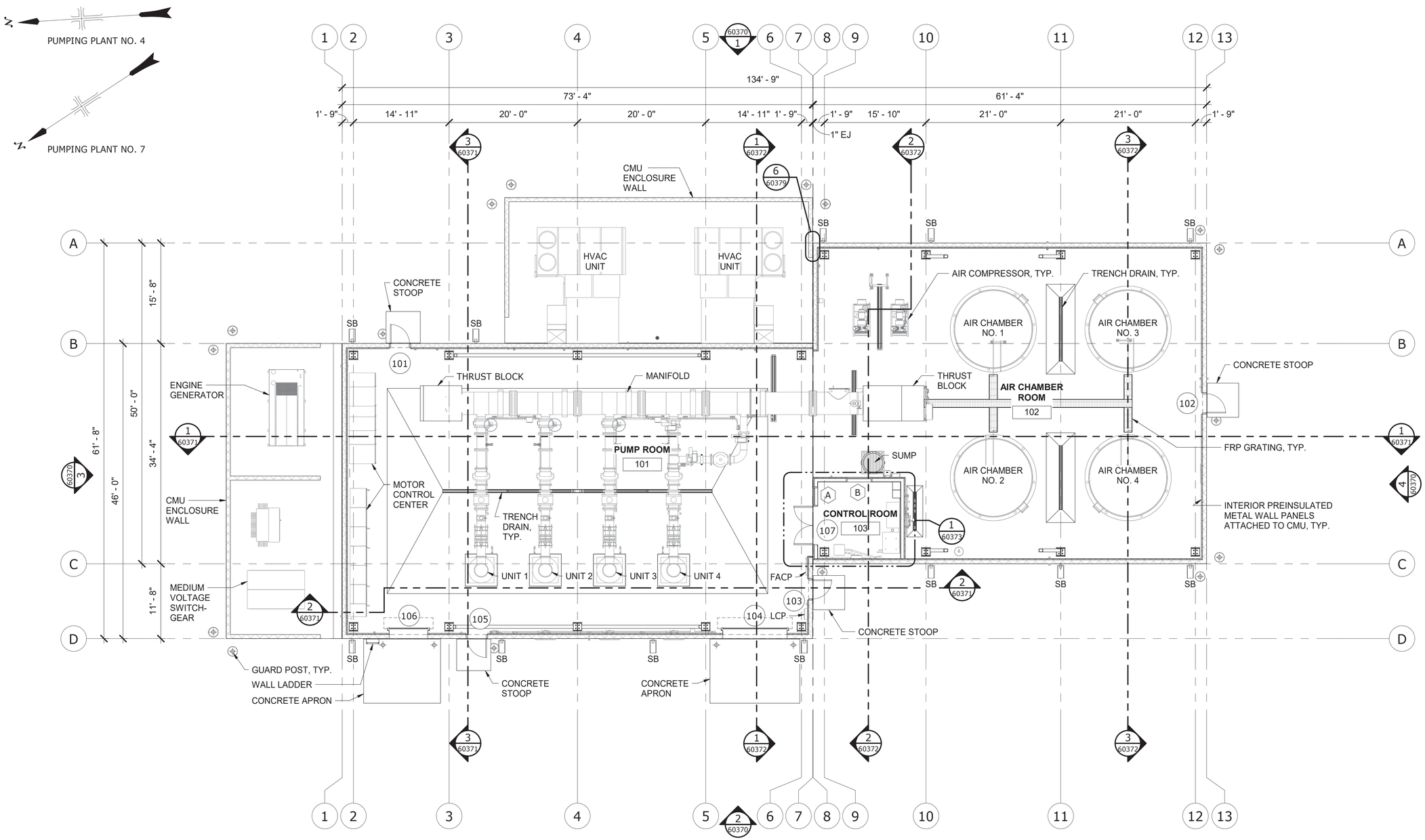

1 FLOOR PLAN - PUMPING PLANT

NOTES

1. SEE (60366) FOR ARCHITECTURAL GENERAL NOTES, SYMBOLS, AND ABBREVIATIONS.

0 4' 8' 16'

ALWAYS THINK **SAFETY**

U.S. DEPARTMENT OF THE INTERIOR
BUREAU OF RECLAMATION

NAVAJO-GALLUP WATER SUPPLY PROJECT
NEW MEXICO

SAN JUAN LATERAL
PUMPING PLANT NOS. 4 AND 7

C. TOBIN
DESIGNED
C. TOBIN
DRAWN
KEVIN O'SHEA
CHECKED
TECH. APPR. KEVIN O'SHEA, P.E.
APPROVED ALFRED I. BERNSTEIN
Peer Reviewer - PLANT STRUCTURES GROUP

DENVER, CO 2020-01-24

PUMPING PLANT ARCHITECTURAL

FLOOR PLAN

1695-D-60368

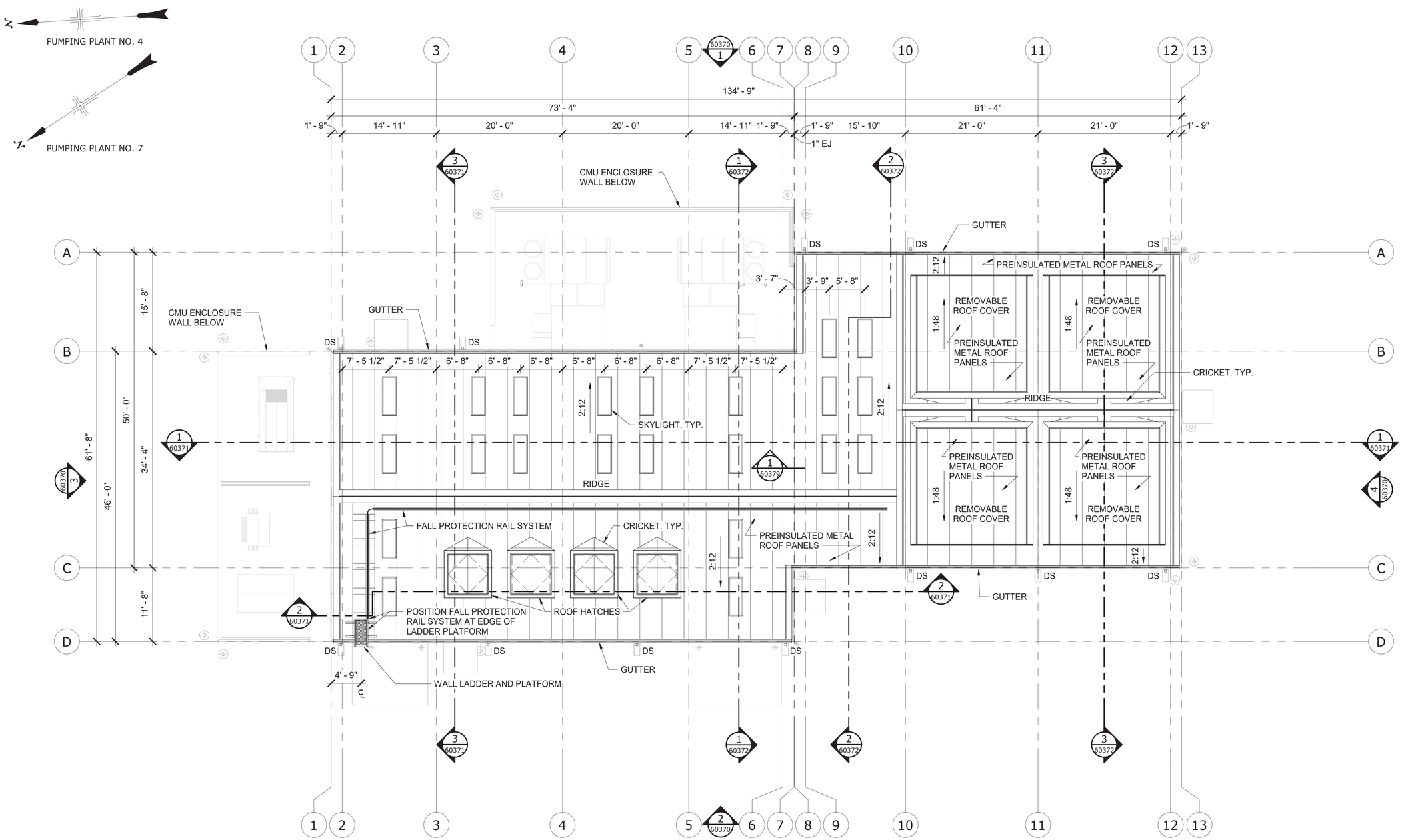

1 ROOF PLAN - PUMPING PLANT

NOTES

1. SEE (60366) FOR ARCHITECTURAL GENERAL NOTES, SYMBOLS, AND ABBREVIATIONS.
2. SEE (60377) FOR ROOF DETAILS.
3. SKYLIGHT DIMENSIONS ON THIS DRAWING ARE TO CENTERLINE OF SKYLIGHT.
4. SEE (60372) FOR ADDITIONAL SKYLIGHT LOCATION DIMENSIONS.
5. PROVIDE ROOF CRICKETS AT SKYLIGHTS AS REQUIRED FOR PROPER ROOF DRAINAGE.

0 4' 8' 16'

RECLAMATION
Managing Water in the West

ALWAYS THINK SAFETY

U.S. DEPARTMENT OF THE INTERIOR
BUREAU OF RECLAMATION

NAVAJO-GALLUP WATER SUPPLY PROJECT
NEW MEXICO

SAN JUAN LATERAL
PUMPING PLANT NOS. 4 AND 7

C. TOBIN
DESIGNED
C. TOBIN
DRAWN
KEVIN O'SHEA
CHECKED
TECH. APPR. KEVIN O'SHEA, P.E.
APPROVED ALFRED I. BERNSTEIN
Peer Reviewer - PLANT STRUCTURES GROUP

DENVER, CO 2020-01-24

PUMPING PLANT ARCHITECTURAL

ROOF PLAN

1695-D-60369

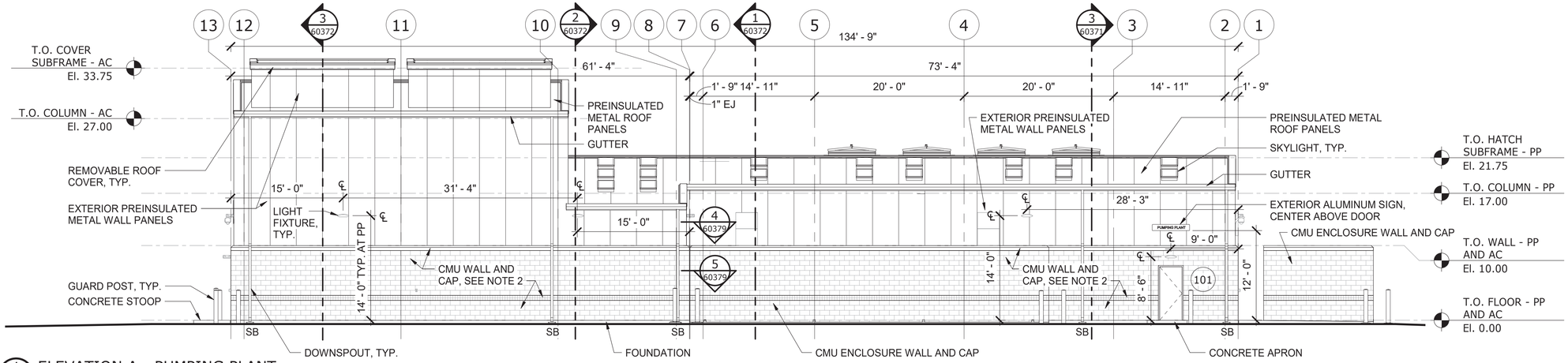

1 60368 ELEVATION A - PUMPING PLANT

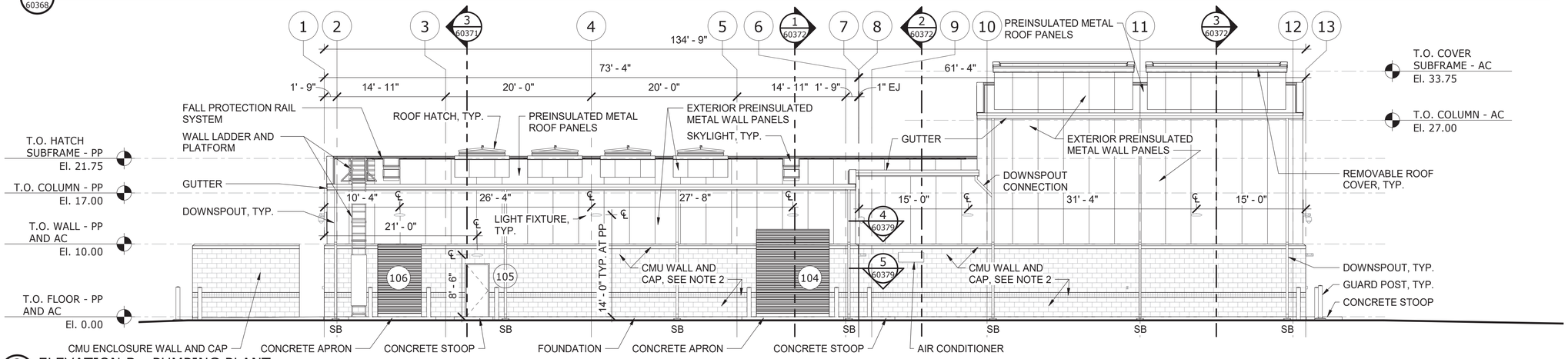

2 60368 ELEVATION B - PUMPING PLANT

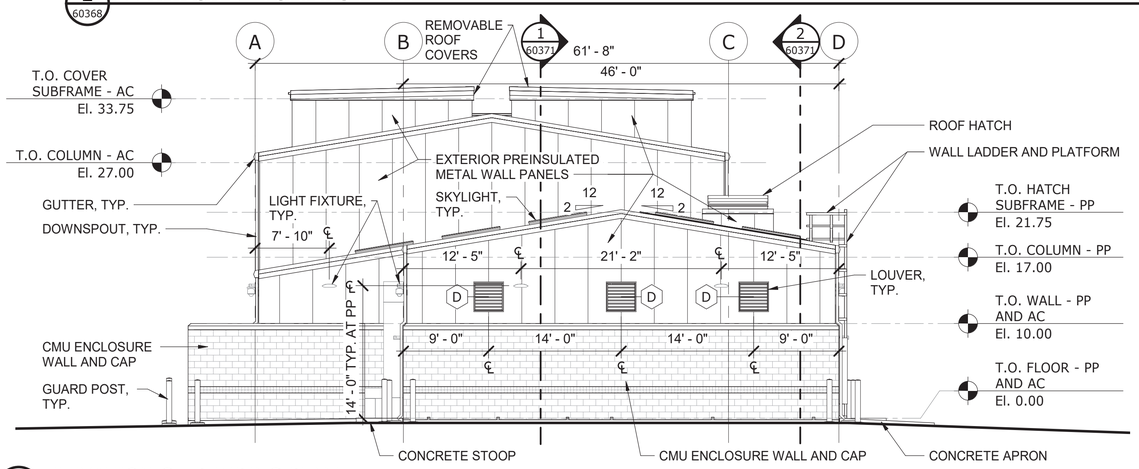

3 60368 ELEVATION C - PUMPING PLANT

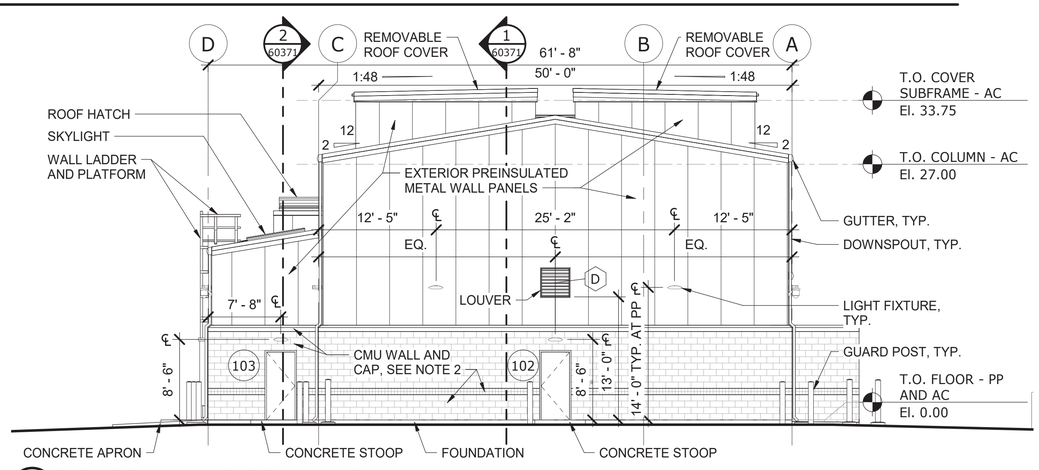

4 60368 ELEVATION D - PUMPING PLANT

NOTES

1. SEE (60366) FOR ARCHITECTURAL GENERAL NOTES, SYMBOLS, AND ABBREVIATIONS.
2. SEE (60378) FOR CMU WALL COURSING AND PATTERN DETAILS.

0 4' 8' 16'

RECLAMATION
Managing Water in the West

ALWAYS THINK SAFETY

U.S. DEPARTMENT OF THE INTERIOR
BUREAU OF RECLAMATION

NAVAJO-GALLUP WATER SUPPLY PROJECT
NEW MEXICO

SAN JUAN LATERAL
PUMPING PLANT NOS. 4 AND 7

C. TOBIN
DESIGNED
C. TOBIN
DRAWN
KEVIN O'SHEA
CHECKED
TECH. APPR. KEVIN O'SHEA, P.E.
APPROVED ALFRED T. BERNSTEIN
Peer Reviewer - PLANT STRUCTURES GROUP
DENVER, CO 2020-01-24

PUMPING PLANT ARCHITECTURAL

EXTERIOR ELEVATIONS

1695-D-60370

RECLAMATION
Managing Water in the West

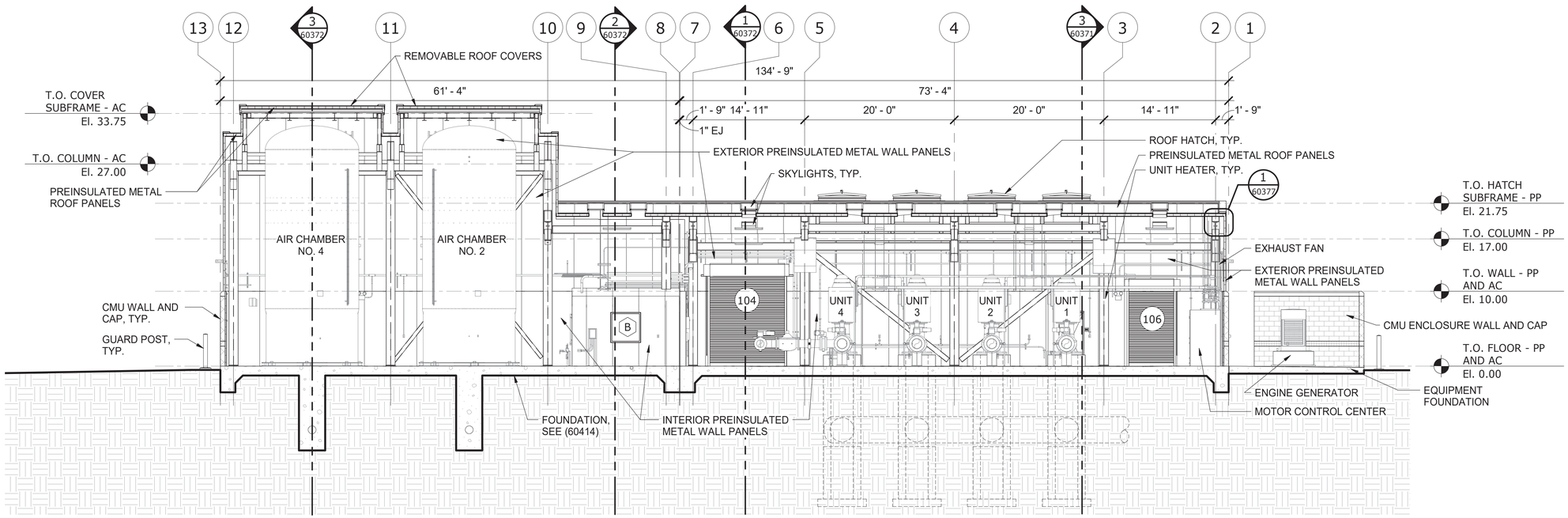

1 60368 BUILDING SECTION A - PUMPING PLANT

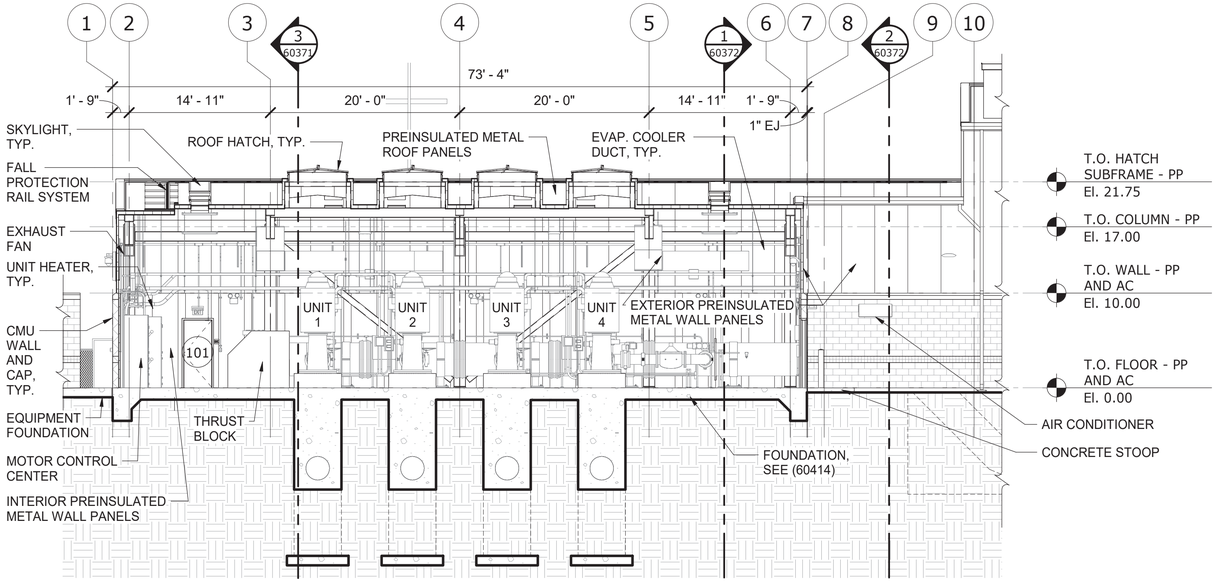

2 60368 BUILDING SECTION B - PUMPING PLANT

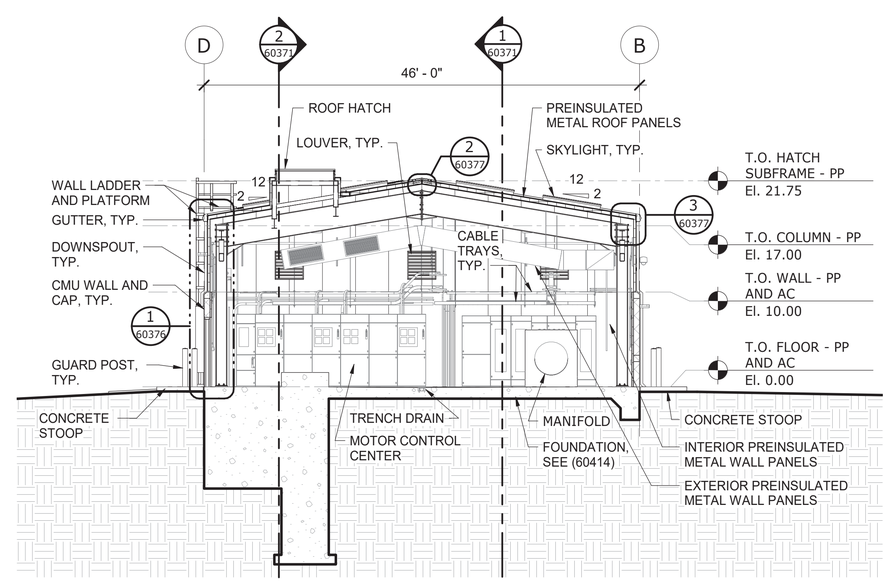

3 60368 BUILDING SECTION C - PUMPING PLANT

NOTES

1. SEE (60366) FOR ARCHITECTURAL GENERAL NOTES, SYMBOLS, AND ABBREVIATIONS.

0 4' 8' 16'

ALWAYS THINK **SAFETY**

U.S. DEPARTMENT OF THE INTERIOR
BUREAU OF RECLAMATION

NAVAJO-GALLUP WATER SUPPLY PROJECT
NEW MEXICO

SAN JUAN LATERAL
PUMPING PLANT NOS. 4 AND 7

DESIGNED	C. TOBIN
DRAWN	C. TOBIN
CHECKED	KEVIN O'SHEA
TECH. APPR.	KEVIN O'SHEA, P.E.
APPROVED (Peer Reviewer - PLANT STRUCTURES GROUP)	ALFRED I. BERNSTEIN
DENVER, CO	2020-01-24

PUMPING PLANT ARCHITECTURAL

BUILDING SECTIONS

1695-D-60371

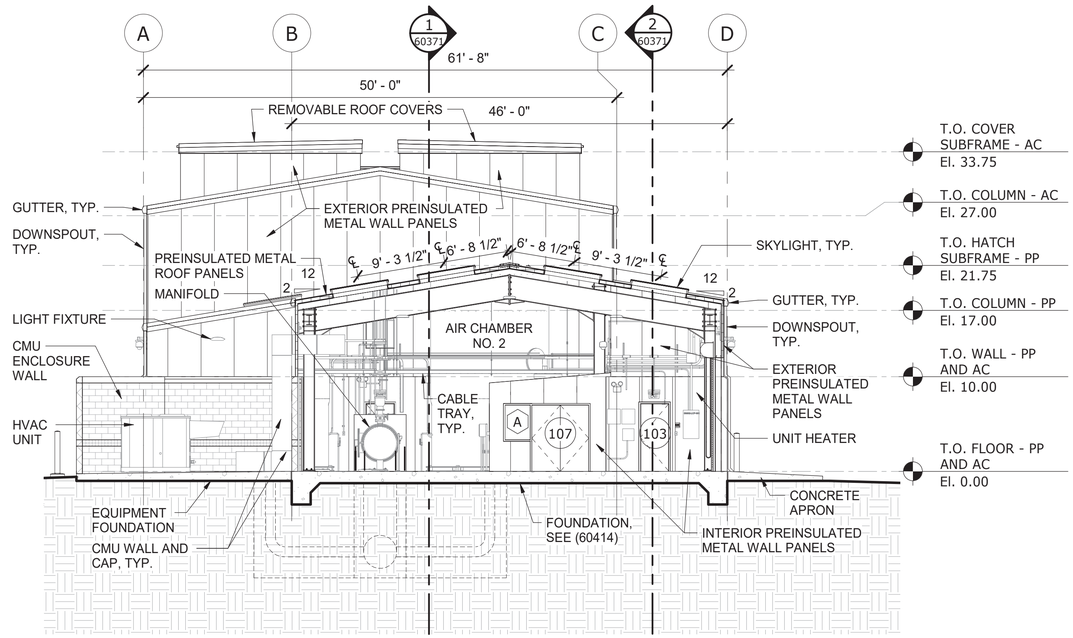

1 60368 BUILDING SECTION D - PUMPING PLANT

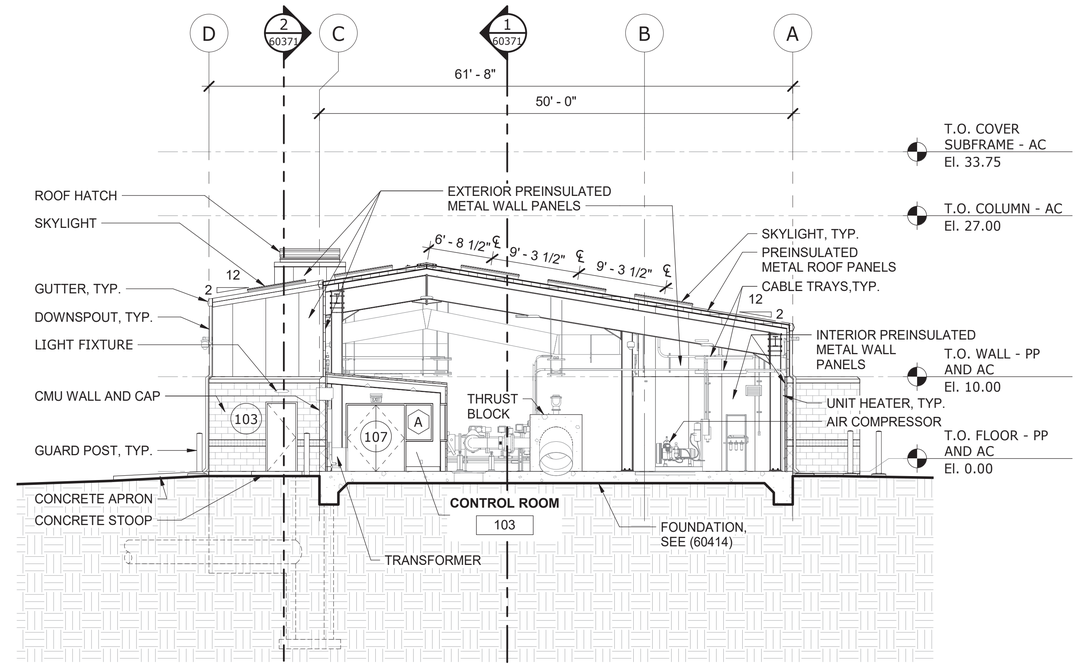

2 60368 BUILDING SECTION E - PUMPING PLANT

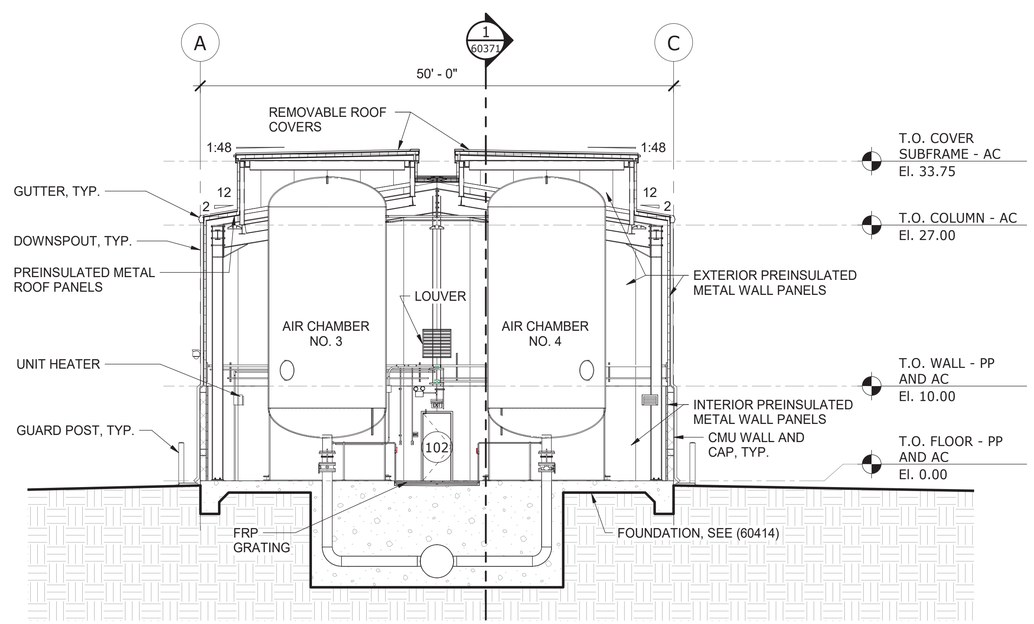

3 60368 BUILDING SECTION F - PUMPING PLANT

NOTES

1. SEE (60366) FOR ARCHITECTURAL GENERAL NOTES, SYMBOLS, AND ABBREVIATIONS.

0 4' 8' 16'

RECLAMATION
Managing Water in the West

ALWAYS THINK **SAFETY**

U.S. DEPARTMENT OF THE INTERIOR
BUREAU OF RECLAMATION

NAVAJO-GALLUP WATER SUPPLY PROJECT
NEW MEXICO

SAN JUAN LATERAL
PUMPING PLANT NOS. 4 AND 7

C. TOBIN
DESIGNED
C. TOBIN
DRAWN
KEVIN O'SHEA
CHECKED
TECH. APPR. KEVIN O'SHEA, P.E.
APPROVED ALFRED I. BERNSTEIN
Peer Reviewer - PLANT STRUCTURES GROUP

DENVER, CO 2020-01-24

PUMPING PLANT ARCHITECTURAL

BUILDING SECTIONS

1695-D-60372

RECLAMATION
Managing Water in the West

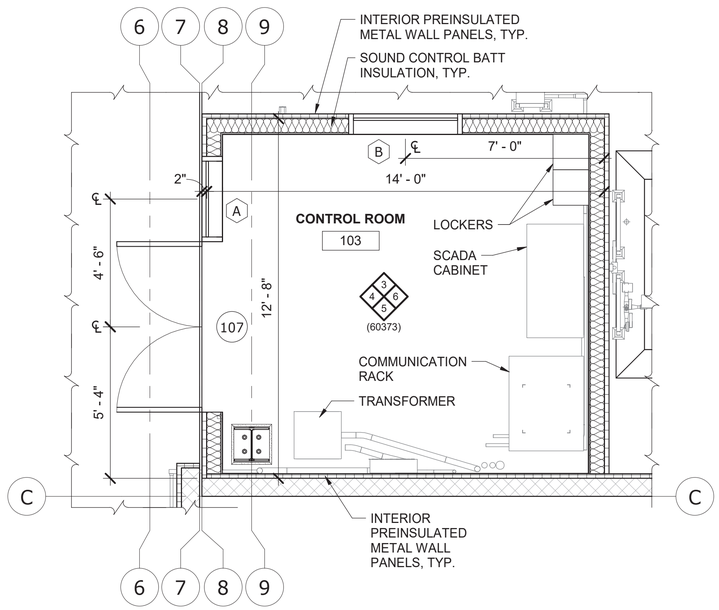

1 FLOOR PLAN - CONTROL ROOM
60368

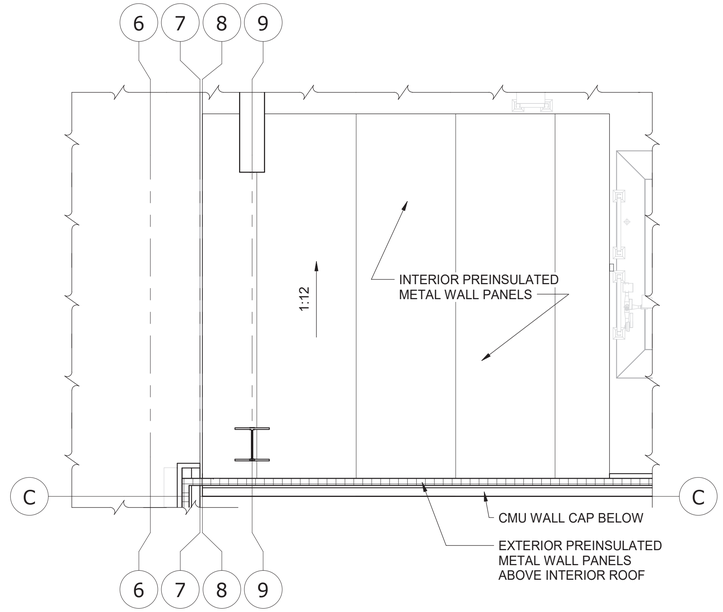

2 INTERIOR ROOF PLAN - CONTROL ROOM

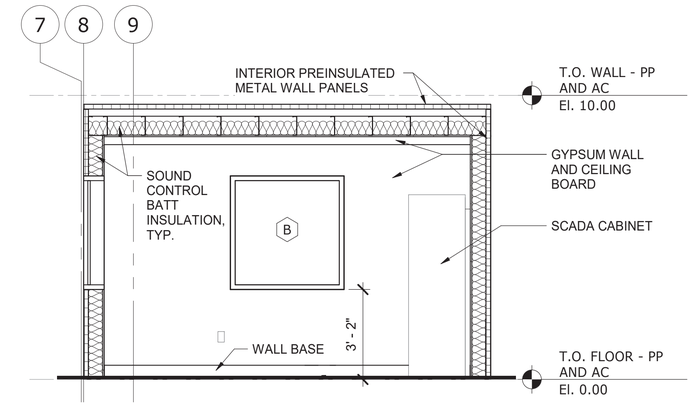

3 INTERIOR ELEVATION A - CONTROL ROOM

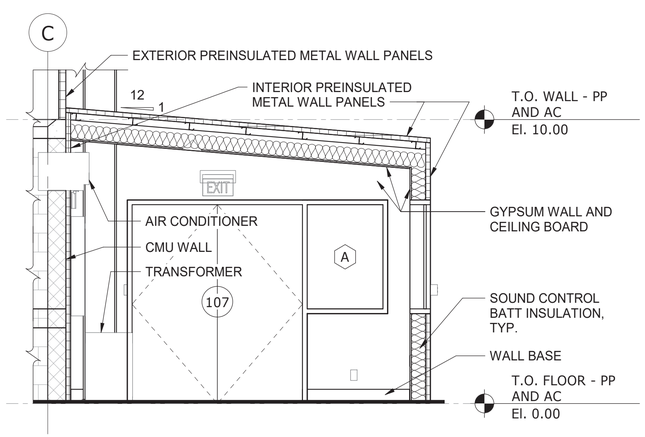

4 INTERIOR ELEVATION B - CONTROL ROOM

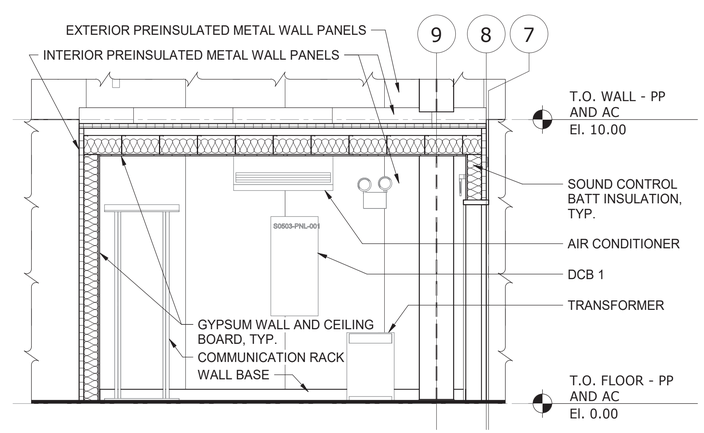

5 INTERIOR ELEVATION C - CONTROL ROOM

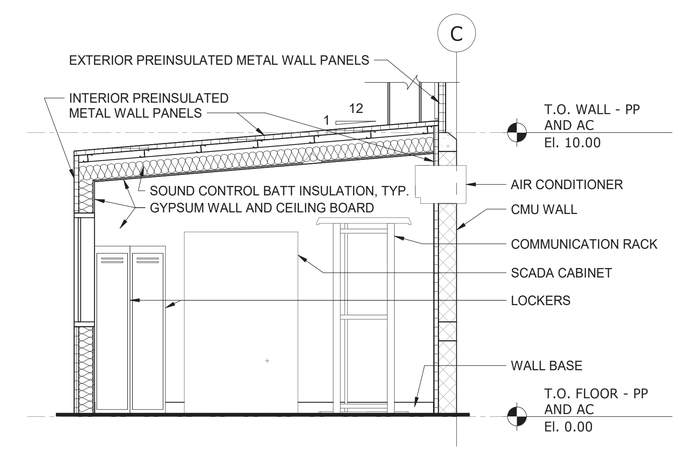

6 INTERIOR ELEVATION D - CONTROL ROOM

NOTES

1. SEE (60366) FOR ARCHITECTURAL GENERAL NOTES, SYMBOLS, AND ABBREVIATIONS.

0 2' 4' 6'

ALWAYS THINK **SAFETY**

U.S. DEPARTMENT OF THE INTERIOR
BUREAU OF RECLAMATION
NAVAJO-GALLUP WATER SUPPLY PROJECT
NEW MEXICO

SAN JUAN LATERAL
PUMPING PLANT NOS. 4 AND 7

C. TOBIN
DESIGNED
C. TOBIN
DRAWN
KEVIN O'SHEA
CHECKED
TECH. APPR. KEVIN O'SHEA, P.E.
APPROVED ALFRED I. BERNSTEIN
Peer Reviewer - PLANT STRUCTURES GROUP

DENVER, CO 2020-01-24

PUMPING PLANT ARCHITECTURAL

CONTROL ROOM - PLAN, ROOF PLAN, AND INTERIOR ELEVATIONS

1695-D-60373

RECLAMATION
Managing Water in the West

DOOR SCHEDULE

DOOR NUMBER	DOOR WIDTH	DOOR HEIGHT	DOOR THK	DOOR TYPE	DOOR MAT'L	DOOR FINISH	FRAME TYPE	FRAME MAT'L	FRAME FINISH	DETAIL HEAD	DETAIL JAMB	DETAIL THRHLD	REMARKS
001	6'-0"	7'-10"	1 3/4"	A	STEEL	PAINTED	1	STEEL	PAINTED	4	6	5	EXTERIOR, PAIRED DOORS, GROUTED FRAME.
002	3'-0"	7'-2"	1 3/4"	B	STEEL	PAINTED	2	STEEL	PAINTED	4	6	5	EXTERIOR, SINGLE DOOR, GROUTED FRAME.
101	3'-0"	7'-2"	1 3/4"	B	STEEL	PAINTED	2	STEEL	PAINTED	4	6	5	EXTERIOR, SINGLE DOOR, GROUTED FRAME.
102	3'-0"	7'-2"	1 3/4"	B	STEEL	PAINTED	2	STEEL	PAINTED	4	6	5	EXTERIOR, SINGLE DOOR, GROUTED FRAME.
103	3'-0"	7'-2"	1 3/4"	B	STEEL	PAINTED	2	STEEL	PAINTED	4	6	5	EXTERIOR, SINGLE DOOR, GROUTED FRAME.
104	10'-0"	12'-0"	EXTERIOR ROLL-UP DOOR. DIMENSIONS PROVIDED ARE CLEAR OPENING DIMENSIONS. INSTALL IN ACCORDANCE WITH SPECIFICATIONS SECTION 08 33 20 AND MANUFACTURER'S DRAWINGS AND INSTRUCTIONS.										
105	3'-0"	7'-2"	1 3/4"	B	STEEL	PAINTED	2	STEEL	PAINTED	4	6	5	EXTERIOR, SINGLE DOOR, GROUTED FRAME.
106	6'-0"	10'-0"	EXTERIOR ROLL-UP DOOR. DIMENSIONS PROVIDED ARE CLEAR OPENING DIMENSIONS. INSTALL IN ACCORDANCE WITH SPECIFICATIONS SECTION 08 33 20 AND MANUFACTURER'S DRAWINGS AND INSTRUCTIONS.										
107	6'-0"	7'-0"	1 3/4"	C	STEEL	PAINTED	3	STEEL	PAINTED	8	7	9	INTERIOR, PAIRED DOORS, ATTACHED WINDOW.

WINDOW SCHEDULE

WINDOW MARK	WINDOW WIDTH	WINDOW HEIGHT	WINDOW QUANT.	FRAME TYPE	FRAME MAT'L	FRAME FINISH	DETAIL HEAD	DETAIL JAMB	DETAIL SILL	REMARKS
A	3'-0"	4'-0"	1	3	STEEL	PAINTED	10	12	11	INTERIOR, FIXED, INSULATED GLAZING.
B	4'-0"	4'-0"	1	4	STEEL	PAINTED	10	12	11	INTERIOR, FIXED, INSULATED GLAZING.

LOUVER SCHEDULE

LOUVER MARK	LOUVER WIDTH	LOUVER HEIGHT	LOUVER QUANT.	LOUVER DESCRIPTION	REMARKS
D	3'-0"	3'-0"	4	VENT	SEE MECHANICAL DRAWINGS, SPECIFICATIONS, AND MANUFACTURER'S DRAWINGS FOR MOUNTING DETAILS.
E	1'-4"	1'-4"	4	INTAKE	SEE MECHANICAL DRAWINGS, SPECIFICATIONS, AND MANUFACTURER'S DRAWINGS FOR MOUNTING DETAILS.

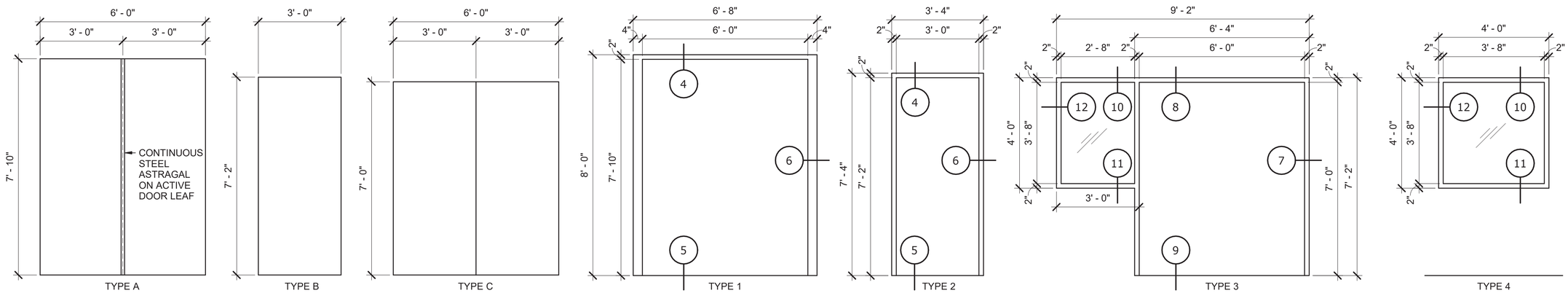

1 DOOR TYPES

2 DOOR FRAME TYPES

3 WINDOW FRAME TYPES

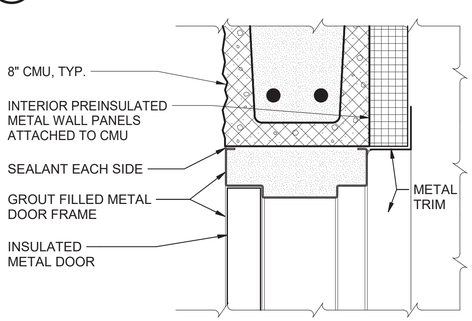

4 DOOR HEAD DETAIL AT CMU

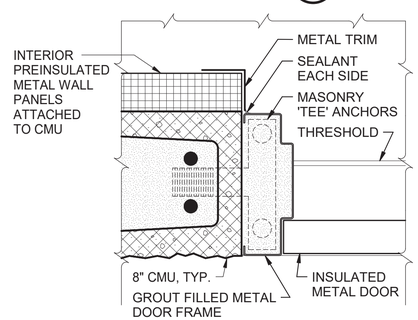

6 DOOR JAMB DETAIL AT CMU

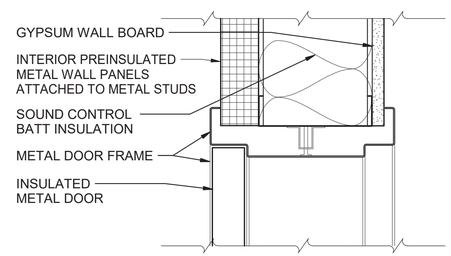

8 DOOR HEAD DETAIL AT INTERIOR

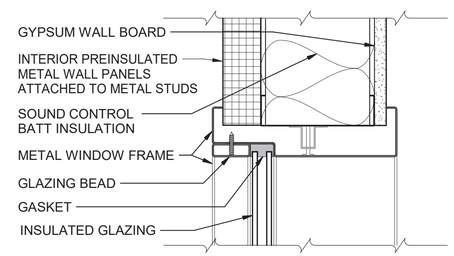

10 WINDOW HEAD DETAIL

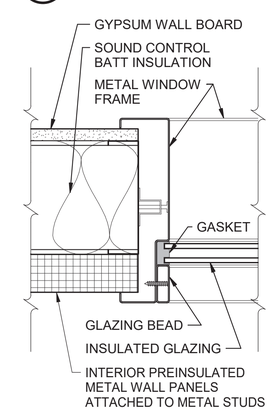

12 WINDOW JAMB DETAIL

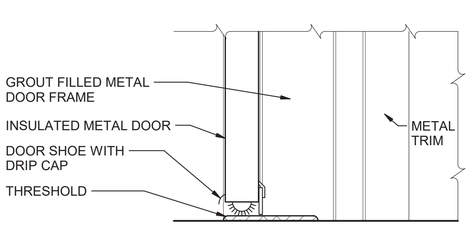

5 DOOR THRESHOLD DETAIL AT CMU

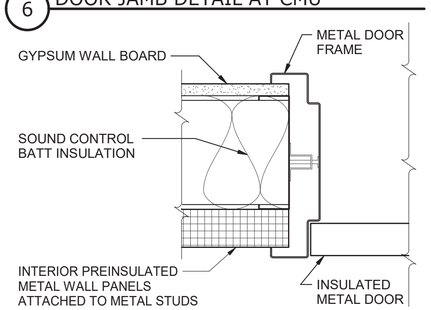

7 DOOR JAMB DETAIL AT INTERIOR

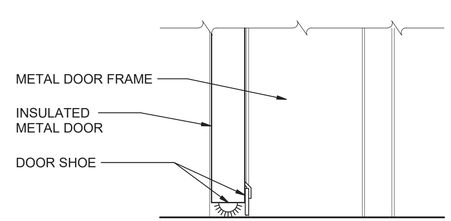

9 DOOR THRESHOLD DETAIL AT INTERIOR

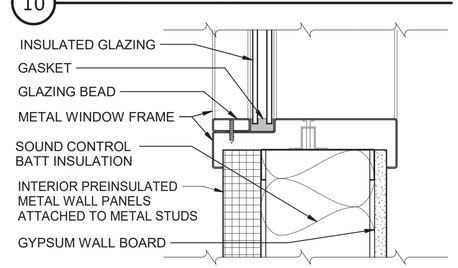

11 WINDOW SILL DETAIL

0 1' 2' 4'
DETAILS 1 - 3

0 3" 6" 9"
DETAILS 4 - 12

NOTES

1. SEE (60366) FOR ARCHITECTURAL GENERAL NOTES, SYMBOLS, AND ABBREVIATIONS.
2. ALL DOOR HARDWARE NOT SHOWN ON DETAIL DRAWINGS.

ALWAYS THINK **SAFETY**

U.S. DEPARTMENT OF THE INTERIOR
BUREAU OF RECLAMATION

NAVAJO-GALLUP WATER SUPPLY PROJECT
NEW MEXICO

SAN JUAN LATERAL
PUMPING PLANT NOS. 4 AND 7

C. TOBIN
DESIGNED
C. TOBIN
DRAWN
KEVIN O'SHEA
CHECKED
TECH. APPR. KEVIN O'SHEA, P.E.
APPROVED ALFRED I. BERNSTEIN
Peer Reviewer - PLANT STRUCTURES GROUP

DENVER, CO 2020-01-24

PUMPING PLANT AND CHEMICAL BUILDING ARCHITECTURAL

DOOR, WINDOW, AND LOUVER SCHEDULES AND DETAILS

1695-D-60374

1 DETAIL 1

2 DETAIL 2

SIGN SCHEDULE

BUILDING	DESCRIPTION	SIGN TYPE	SIGN TEXT	REMARKS	QUANT.	DWG. REF.
PUMPING PLANT	BUILDING IDENTITY SIGN: PUMPING PLANT	EXTERIOR ALUMINUM	TO BE DETERMINED BY GOVERNMENT	SEE 1/60370 FOR MOUNTING LOCATION, SEE DETAIL 1 FOR SIGN DETAILS	1	1/60370
CHEMICAL BUILDING	BUILDING IDENTITY SIGN: CHEMICAL BUILDING	EXTERIOR ALUMINUM	TO BE DETERMINED BY GOVERNMENT	SEE 2/60387 FOR MOUNTING LOCATION, SEE DETAIL 2 FOR SIGN DETAILS	1	2/60387
CHEMICAL BUILDING	HAZARD IDENTIFICATION SIGNS: LARGE/EXTERIOR	EXTERIOR ALUMINUM	TO BE DETERMINED BY GOVERNMENT	SEE 1, 2, 3, & 4/60387 FOR MOUNTING LOCATIONS, SEE DETAIL 3 FOR SIGN DETAILS	4	1/60387, 2/60387, 3/60387, 4/60387
CHEMICAL BUILDING	HAZARD IDENTIFICATION SIGNS: SMALL/EXTERIOR	EXTERIOR ALUMINUM	TO BE DETERMINED BY GOVERNMENT	SEE 1 & 4/60387, AND DETAIL 9 FOR MOUNTING LOCATIONS, SEE DETAIL 4 FOR SIGN DETAILS	2	1/60387, 4/60387
CHEMICAL BUILDING	DANGER SODIUM HYPOCHLORITE SIGNS	EXTERIOR ALUMINUM	"DANGER SODIUM HYPOCHLORITE"	SEE 1 & 4/60387, AND DETAIL 9 FOR MOUNTING LOCATIONS OF TWO SIGNS AT CHEMICAL BUILDING, SEE 60476 FOR MOUNTING LOCATION AT STORAGE TANK T1, SEE DETAIL 5 FOR SIGN DETAILS	3	1/60387, 4/60387, 60476
CHEMICAL BUILDING	DANGER NO SMOKING SIGNS	EXTERIOR ALUMINUM	"DANGER NO SMOKING"	SEE 1 & 4/60387, AND DETAIL 9 FOR MOUNTING LOCATIONS, SEE DETAIL 6 FOR SIGN DETAILS	2	1/60387, 4/60387
CHEMICAL BUILDING	HAZARD IDENTIFICATION SIGNS: LARGE/INTERIOR	INTERIOR ALUMINUM	TO BE DETERMINED BY GOVERNMENT	CENTER ON EAST AND WEST WALLS AS SHOWN ON 1/60388, MOUNTING HEIGHT APPROX. 11' - 6" AT CENTER OF SIGN FROM T.O. FLOOR, MOUNT ON BUILDING GIRTS, SEE DETAIL 3 FOR SIGN DETAILS	2	1/60388
CHEMICAL BUILDING	DANGER NO SMOKING SIGNS	INTERIOR ALUMINUM	"DANGER NO SMOKING"	SEE 3/60388, AND DETAIL 10 FOR MOUNTING LOCATIONS, ALSO MOUNT AT DOOR 002 (SEE 1/60388), SEE DETAIL 6 FOR SIGN DETAILS	2	1/60387, 4/60387
PUMPING PLANT	WATER QUALITY SAMPLING STATION ONLY SIGN	INTERIOR ALUMINUM	"WATER QUALITY SAMPLING STATION ONLY"	LOCATE AT GRAB SAMPLE STATION, SEE DETAIL 7 FOR SIGN DETAILS	1	-
PUMPING PLANT AND CHEMICAL BUILDING	EXIT SIGNS	INTERIOR ACRYLIC	"EXIT"	SEE DETAIL 10 FOR TYPICAL MOUNTING LOCATION, MOUNT AT ALL EGRESS DOORS (001, 002, 101, 102, 103, & 105), SEE DETAIL 8 FOR SIGN DETAILS	6	-

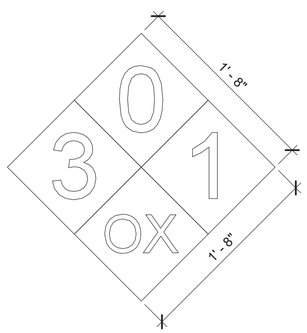

3 DETAIL 3

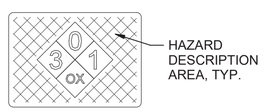

4 DETAIL 4

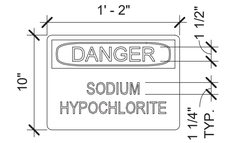

5 DETAIL 5

6 DETAIL 6

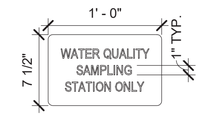

7 DETAIL 7

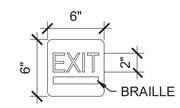

8 DETAIL 8

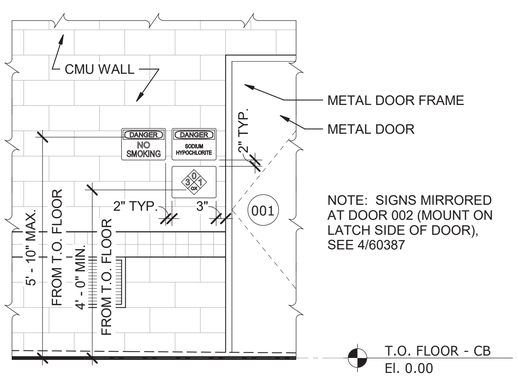

9 DETAIL 9

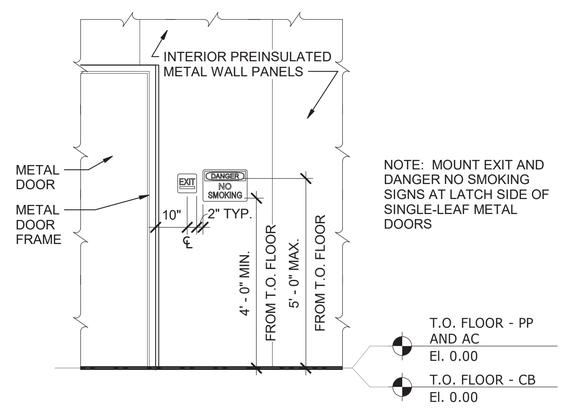

10 DETAIL 10

NOTES

1. SEE (60366) FOR ARCHITECTURAL GENERAL NOTES, SYMBOLS, AND ABBREVIATIONS.
2. SEE SPECIFICATIONS SECTION 10 14 00 FOR SIGNAGE.
3. SIGN SCHEDULE IS NOT ALL INCLUSIVE. IT INCLUDES ALL ARCHITECTURAL SIGNS. PROVIDE ADDITIONAL SIGNS WHERE REQUIRED BY CODE, AS SHOWN ON DRAWINGS, AND AS DIRECTED IN SPECIFICATIONS.
4. SIGN AND SIGN TEXT AND CONTENT DIMENSIONS ARE APPROXIMATE.
5. GOVERNMENT MAY CHANGE SIGN TEXT AND OTHER SIGN CONTENT.

RECLAMATION
Managing Water in the West

ALWAYS THINK **SAFETY**

U.S. DEPARTMENT OF THE INTERIOR
BUREAU OF RECLAMATION

NAVAJO-GALLUP WATER SUPPLY PROJECT
NEW MEXICO

SAN JUAN LATERAL
PUMPING PLANT NOS. 4 AND 7

C. TOBIN
DESIGNED
C. TOBIN
DRAWN
KEVIN O'SHEA
CHECKED
TECH. APPR. KEVIN O'SHEA, P.E.
APPROVED ALFRED I. BERNSTEIN
Peer Reviewer - PLANT STRUCTURES GROUP

DENVER, CO 2020-01-24

PUMPING PLANT AND CHEMICAL BUILDING ARCHITECTURAL

SIGN SCHEDULE AND DETAILS

1695-D-60375

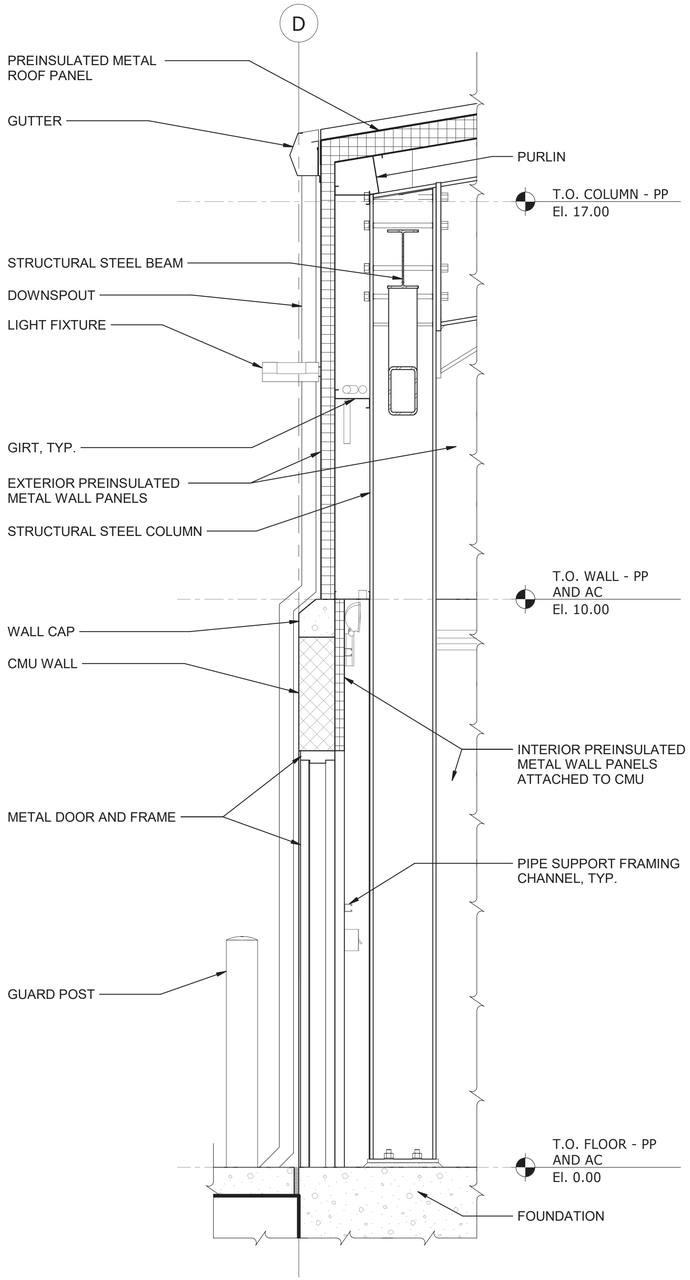

1 60371 WALL SECTION - PUMPING PLANT

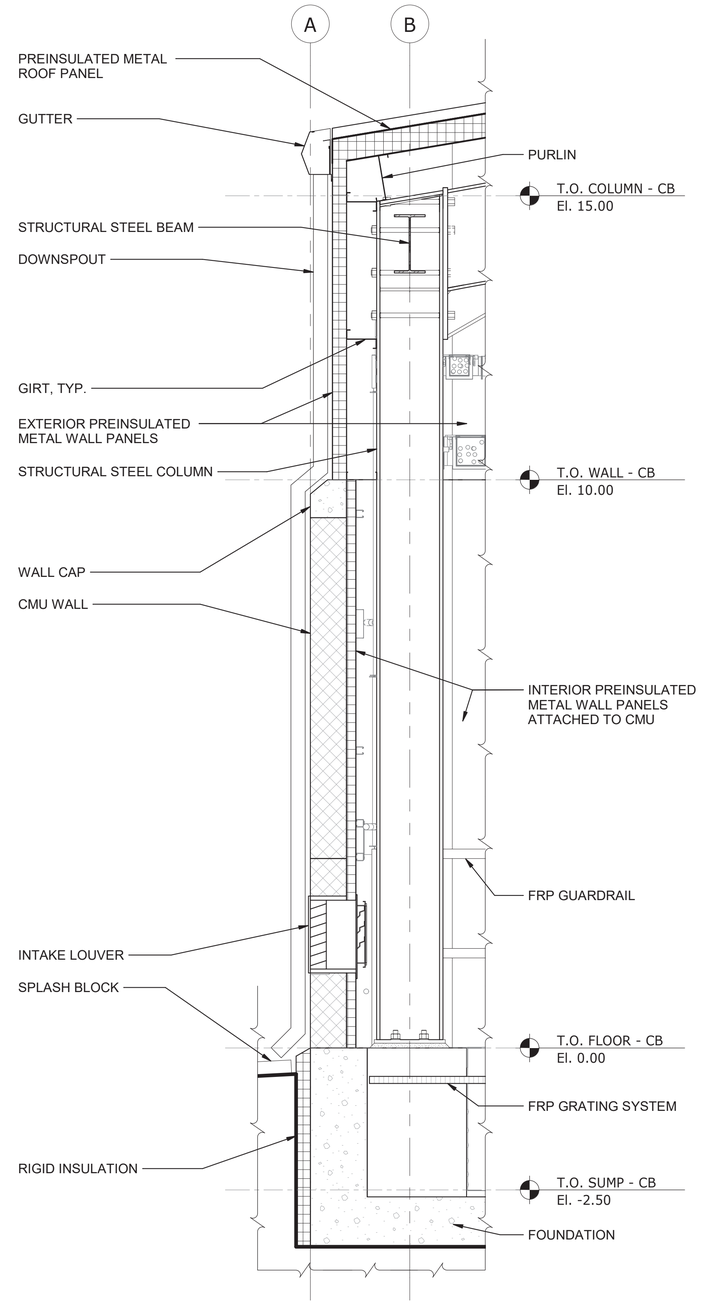

2 60388 WALL SECTION - CHEMICAL BUILDING

NOTES

1. SEE (60366) FOR ARCHITECTURAL GENERAL NOTES, SYMBOLS, AND ABBREVIATIONS.

0 1' 2' 3'

RECLAMATION
Managing Water in the West

ALWAYS THINK **SAFETY**

U.S. DEPARTMENT OF THE INTERIOR
BUREAU OF RECLAMATION
NAVAJO-GALLUP WATER SUPPLY PROJECT
NEW MEXICO

SAN JUAN LATERAL
PUMPING PLANT NOS. 4 AND 7

C. TOBIN
DESIGNED
C. TOBIN
DRAWN
KEVIN O'SHEA
CHECKED
TECH. APPR. KEVIN O'SHEA, P.E.
APPROVED ALFRED I. BERNSTEIN
Peer Reviewer - PLANT STRUCTURES GROUP

DENVER, CO 2020-01-24

PUMPING PLANT AND CHEMICAL BUILDING ARCHITECTURAL

WALL SECTIONS

1695-D-60376

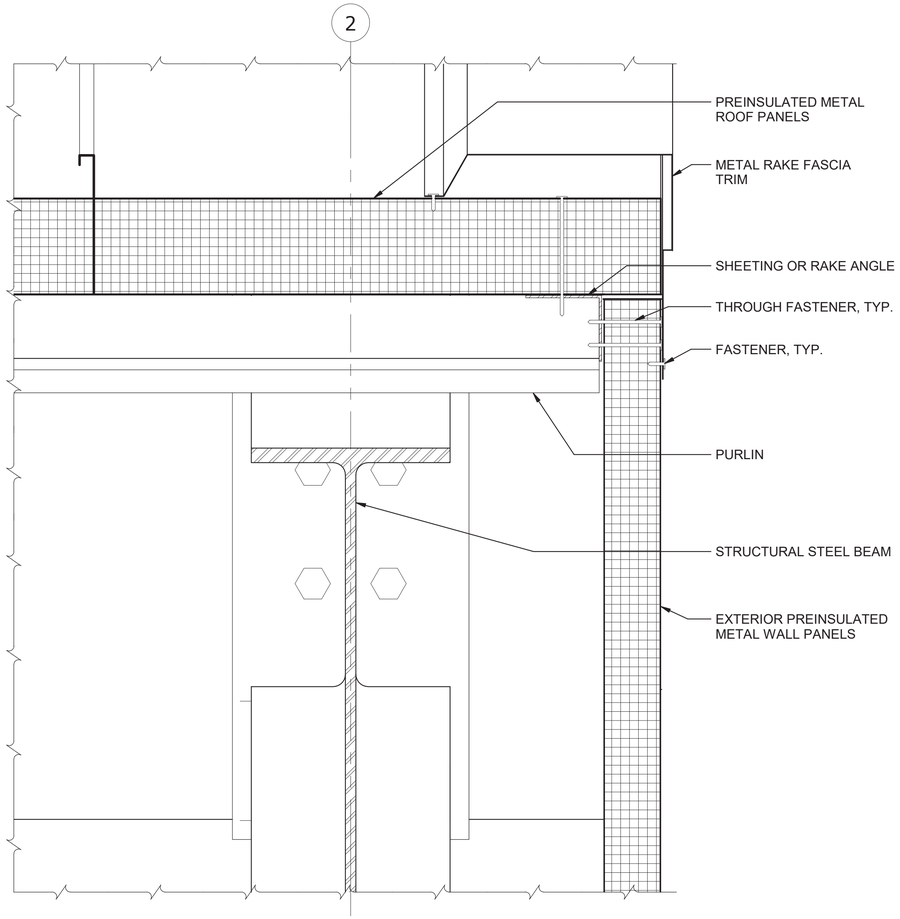

1 60371 RAKE DETAIL

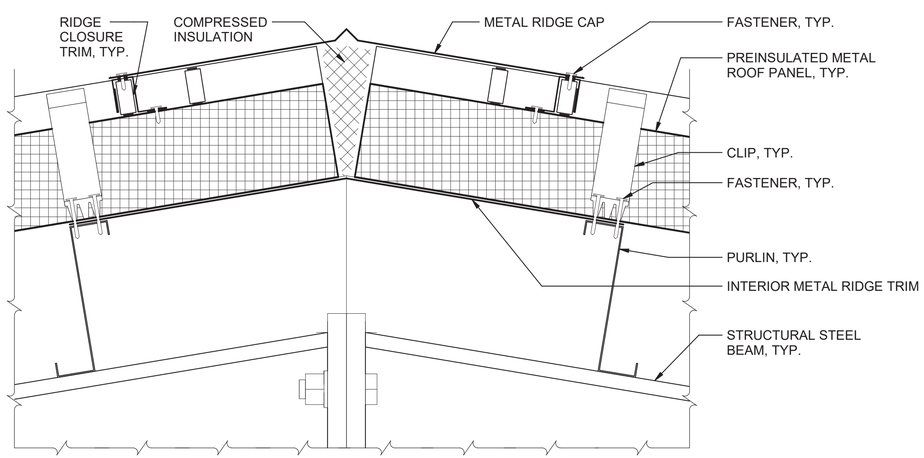

2 60371 RIDGE DETAIL

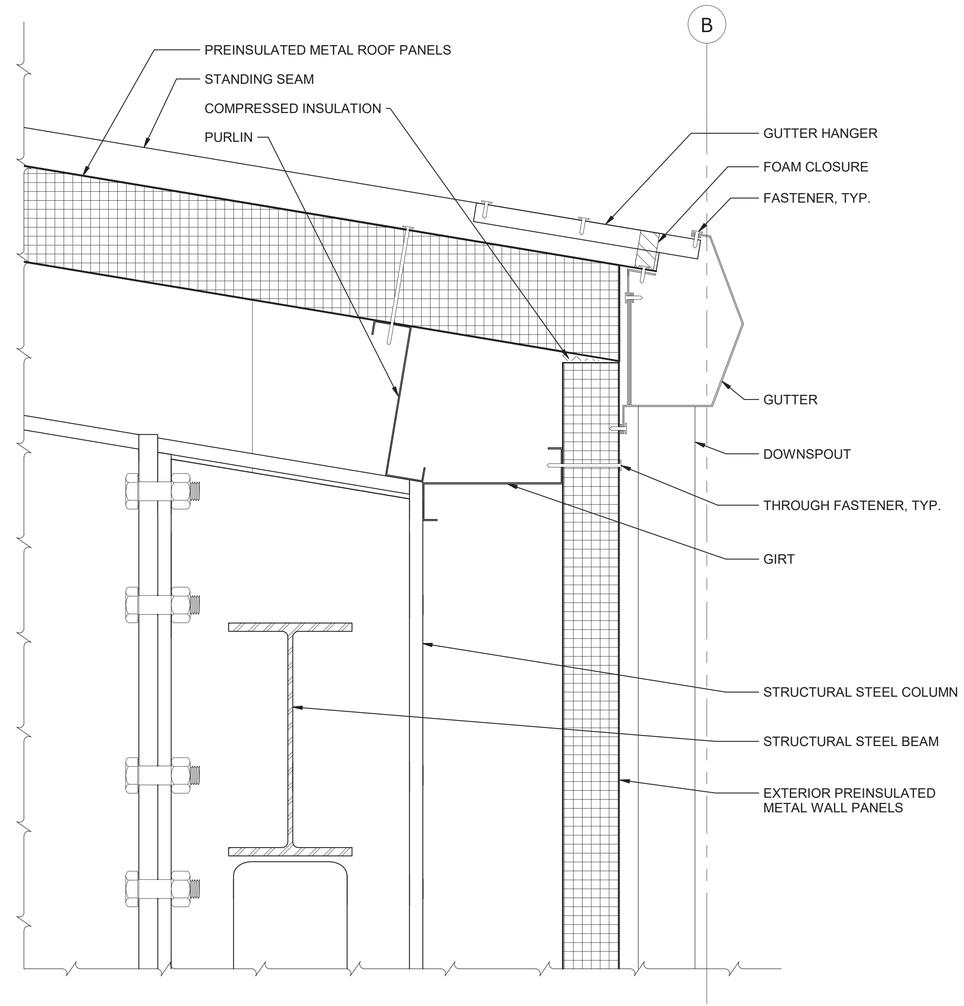

3 60371 EAVE DETAIL

NOTES

1. SEE (60366) FOR ARCHITECTURAL GENERAL NOTES, SYMBOLS, AND ABBREVIATIONS.

0 3" 6" 9"

RECLAMATION
Managing Water in the West

ALWAYS THINK **SAFETY**

U.S. DEPARTMENT OF THE INTERIOR
BUREAU OF RECLAMATION

NAVAJO-GALLUP WATER SUPPLY PROJECT
NEW MEXICO

SAN JUAN LATERAL
PUMPING PLANT NOS. 4 AND 7

C. TOBIN
DESIGNED
C. TOBIN
DRAWN
KEVIN O'SHEA
CHECKED
TECH. APPR. KEVIN O'SHEA, P.E.
APPROVED ALFRED T. BERNSTEIN
Peer Reviewer - PLANT STRUCTURES GROUP

DENVER, CO 2020-01-24

PUMPING PLANT AND CHEMICAL BUILDING ARCHITECTURAL

ROOF DETAILS

1695-D-60377

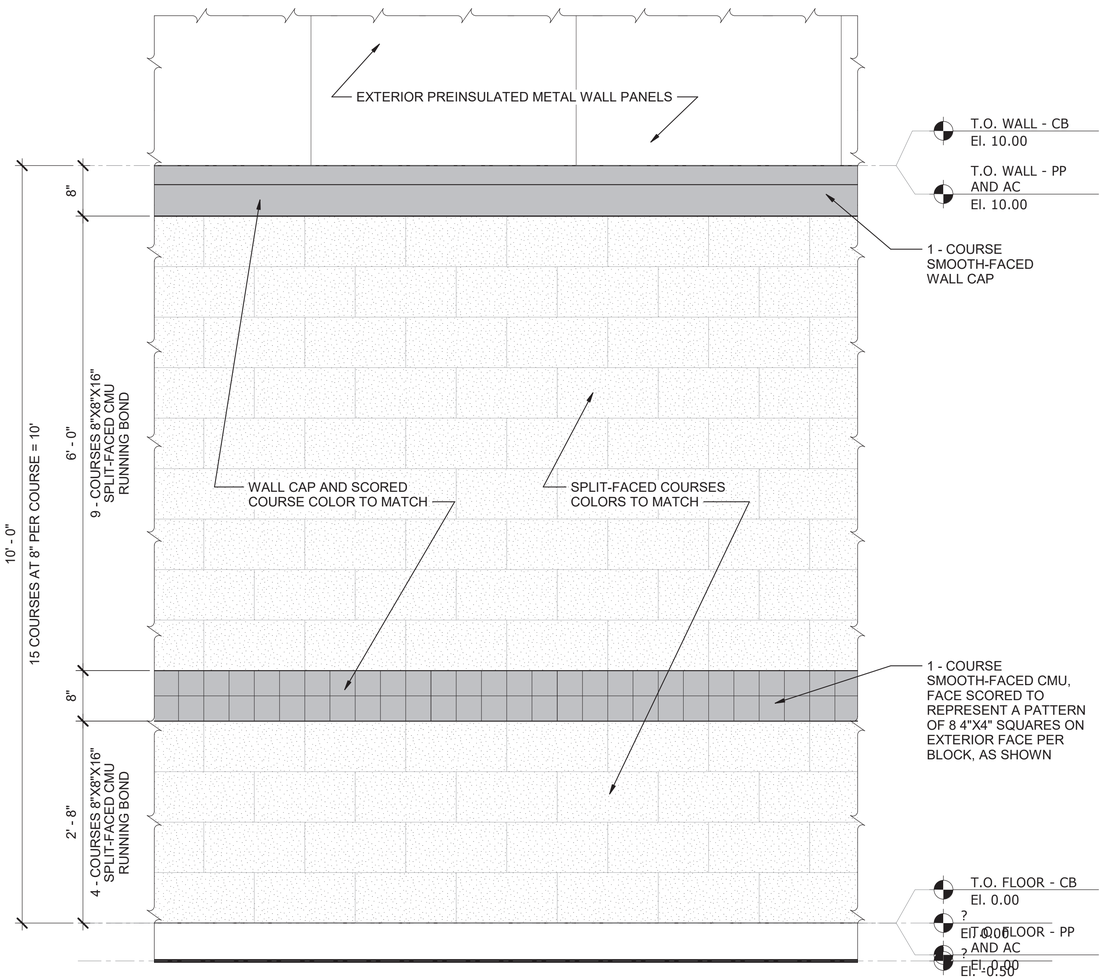

1 TYPICAL MASONRY UNIT COURSING AT BUILDING WALLS

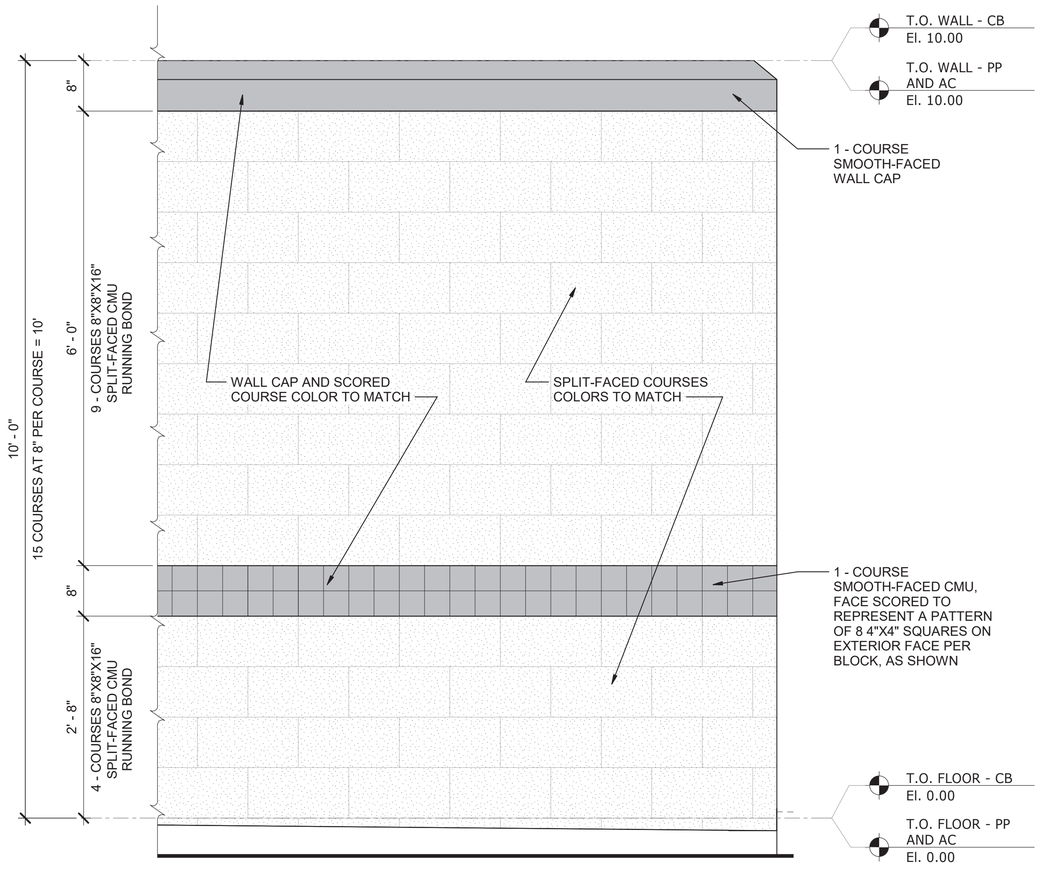

2 TYPICAL MASONRY UNIT COURSING AT ENCLOSURE WALLS

NOTES

1. SEE (60366) FOR ARCHITECTURAL GENERAL NOTES, SYMBOLS, AND ABBREVIATIONS.

0 1' 2'

RECLAMATION
Managing Water in the West

ALWAYS THINK **SAFETY**

U.S. DEPARTMENT OF THE INTERIOR
BUREAU OF RECLAMATION

NAVAJO-GALLUP WATER SUPPLY PROJECT
NEW MEXICO

SAN JUAN LATERAL
PUMPING PLANT NOS. 4 AND 7

C. TOBIN
DESIGNED
C. TOBIN
DRAWN
KEVIN O'SHEA
CHECKED
TECH. APPR. KEVIN O'SHEA, P.E.
APPROVED ALFRED I. BERNSTEIN
Peer Reviewer - PLANT STRUCTURES GROUP

DENVER, CO 2020-01-24

PUMPING PLANT AND CHEMICAL BUILDING ARCHITECTURAL

DETAILS

1695-D-60378

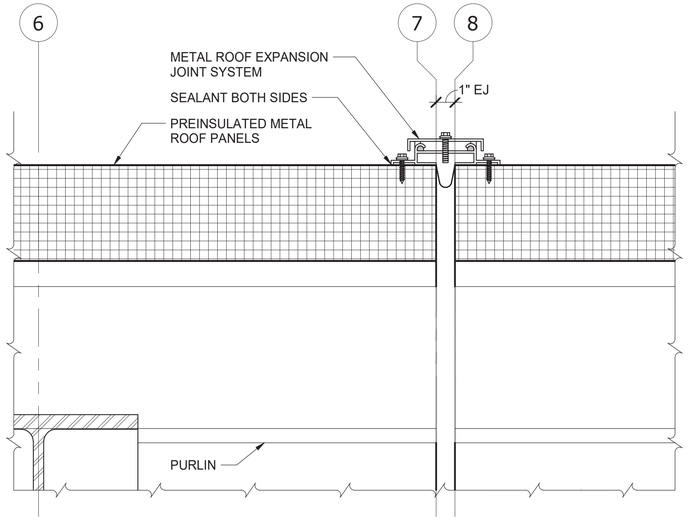

1 60369 EJ AT ROOF

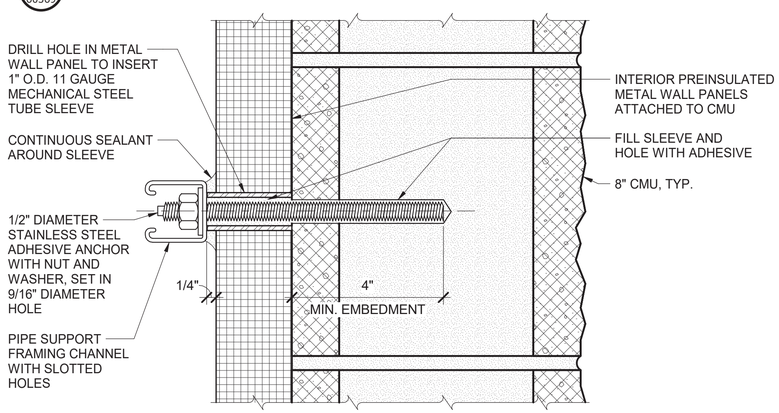

2 TYPICAL THRU WALL PANEL ANCHOR ATTACHMENT DETAIL AT GROUT FILLED BLOCKS

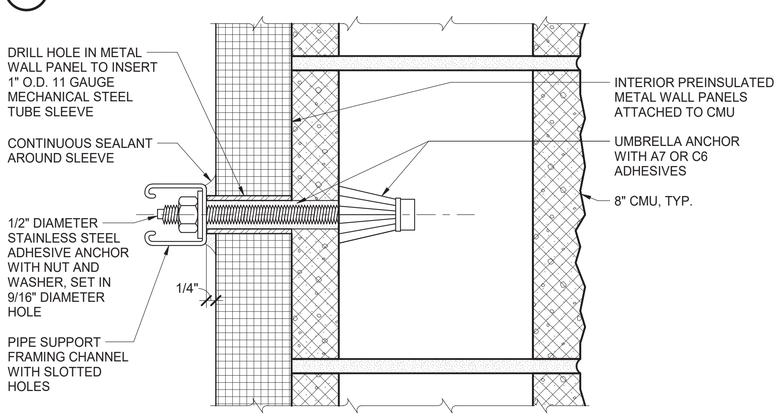

3 TYPICAL THRU WALL PANEL ANCHOR ATTACHMENT DETAIL AT NON-GROUT FILLED BLOCKS

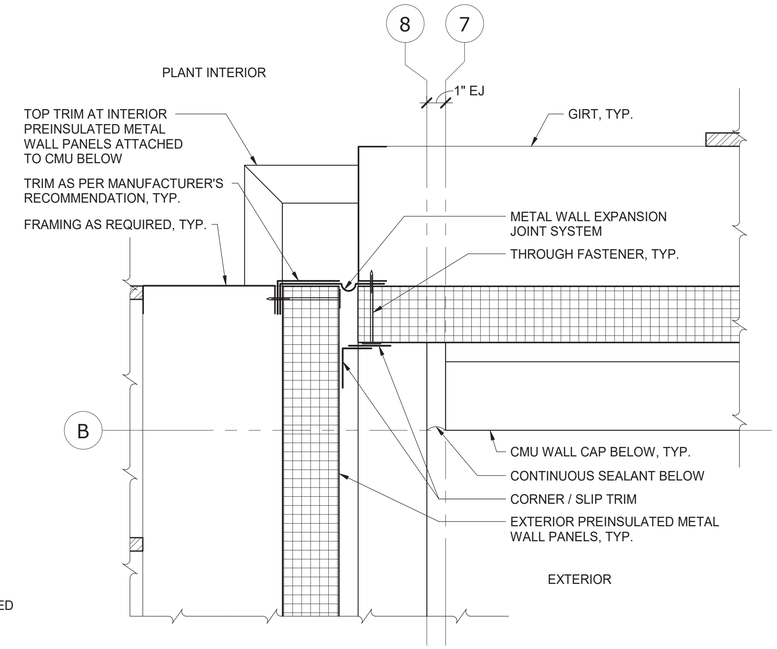

4 60370 EJ AT WALL ABOVE El. 10.00

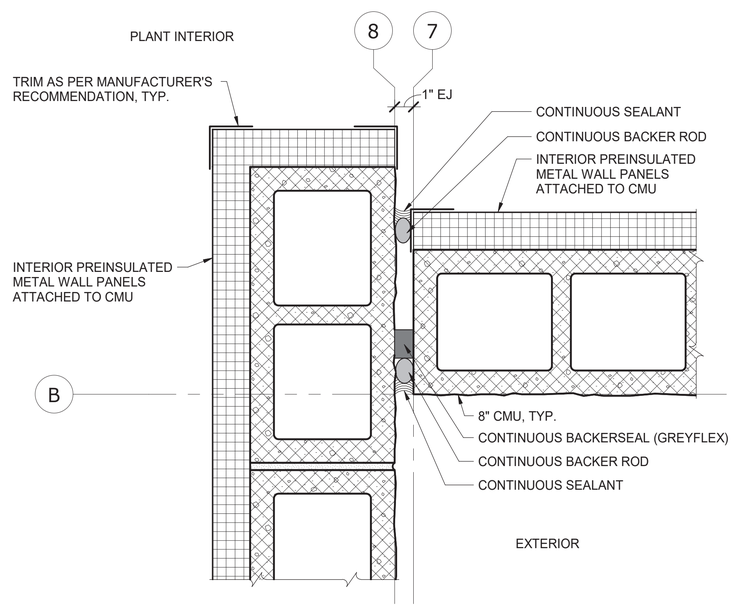

5 60370 EJ AT WALL BELOW El. 10.00

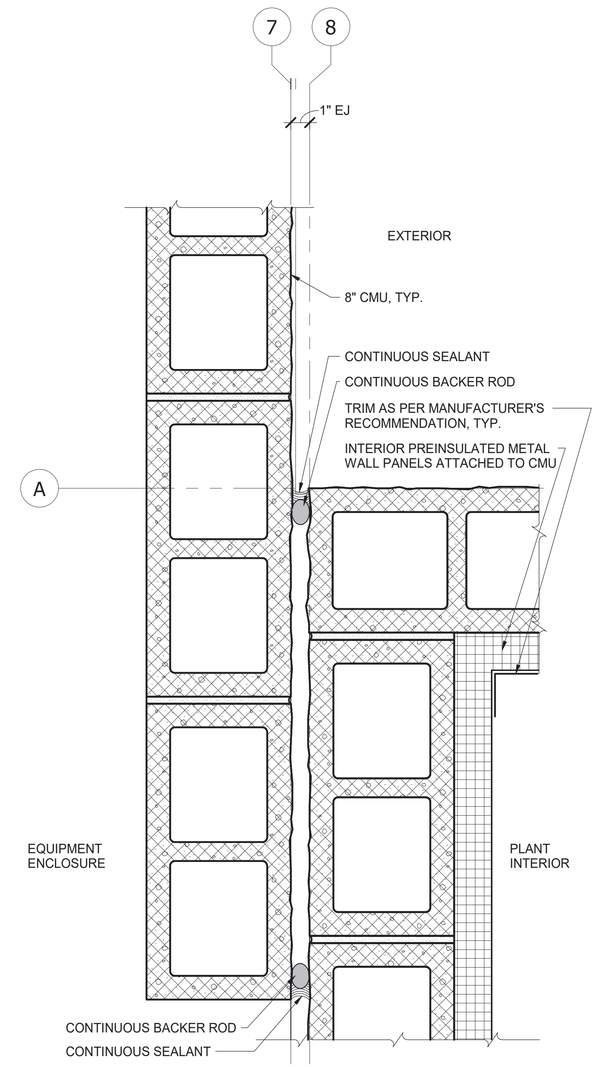

6 60368 EJ AT ENCLOSURE / BUILDING WALL INTERSECTION

NOTES

1. SEE (60366) FOR ARCHITECTURAL GENERAL NOTES, SYMBOLS, AND ABBREVIATIONS.

0 3" 6" 9"
DETAILS 1, 4, 5, 6

0 1" 2" 3" 4"
DETAILS 2, 3

RECLAMATION
Managing Water in the West

ALWAYS THINK **SAFETY**

U.S. DEPARTMENT OF THE INTERIOR
BUREAU OF RECLAMATION

NAVAJO-GALLUP WATER SUPPLY PROJECT
NEW MEXICO

SAN JUAN LATERAL
PUMPING PLANT NOS. 4 AND 7

C. TOBIN
DESIGNED
C. TOBIN
DRAWN
KEVIN O'SHEA
CHECKED
TECH. APPR. KEVIN O'SHEA, P.E.
APPROVED ALFRED I. BERNSTEIN
Peer Reviewer - PLANT STRUCTURES GROUP

DENVER, CO 2020-01-24

PUMPING PLANT AND CHEMICAL BUILDING ARCHITECTURAL

DETAILS

1695-D-60379

RECLAMATION
Managing Water in the West

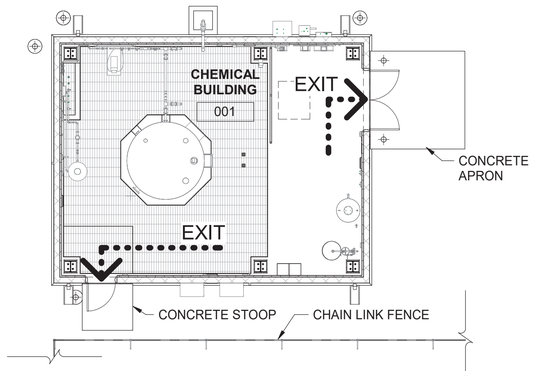

1 LIFE SAFETY PLAN - CHEMICAL BUILDING

0 4' 8' 16'

BUILDING CODE SUMMARY - CHEMICAL BUILDING

ALL WORK TO COMPLY WITH THE 2015 INTERNATIONAL BUILDING CODE (IBC) AND THE 2015 INTERNATIONAL FIRE CODE (IFC)

OCCUPANCY TYPES:
HIGH-HAZARD GROUP H (IBC 307.1)
SUB-CATEGORY HAZARD GROUP H-4 (IBC 307.6)

CONSTRUCTION TYPE: V-B (IBC 602.5)

ALLOWABLE AREA: 6,500 SF (IBC TABLE 506.2)
ACTUAL AREA: 867 SF (CALCULATED AS DEFINED PER IBC 502.1)

ALLOWABLE HEIGHT: 40 FEET, 2 STORIES (IBC TABLES 504.3 AND 504.4)
ACTUAL HEIGHT: 23 FEET-2 INCHES, 2 STORIES (CALCULATED AS DEFINED PER IBC 502.1)

OCCUPANT LOAD (IBC TABLE 1004.1.2):
867 SF "INDUSTRIAL AREAS" / 100 GROSS = 9 TOTAL OCCUPANT LOAD

REQUIRED NUMBER OF EXITS: ONE (IBC TABLES 1006.2.1, 1006.3.1, AND 1006.3.2(2))
NUMBER OF EXITS PROVIDED: TWO

FIRE RESISTANCE RATINGS (IBC TABLE 601):
PRIMARY STRUCTURAL FRAME: 0 HOURS
BEARING WALLS (EXTERIOR AND INTERIOR): 0 HOURS
NONBEARING WALLS AND PARTITIONS, EXTERIOR: 0 HOURS (IBC TABLE 602)
NONBEARING WALLS AND PARTITIONS, INTERIOR: 0 HOURS
FLOOR CONSTRUCTION AND ASSOCIATED SECONDARY MEMBERS: 0 HOURS
ROOF CONSTRUCTION AND ASSOCIATED SECONDARY MEMBERS: 0 HOURS

PLUMBING FIXTURES: NOT PROVIDED (IBC 2902.1)

CLIMATE ZONE (ASHRAE 90.1): 5B
INSULATION VALUES:
ROOF (INSULATION ENTIRELY ABOVE DECK): R-30 C.I. MIN.
WALLS, ABOVE GRADE (METAL BUILDING): R-19 C.I. MIN.
WALLS, ABOVE GRADE (MASS): R-11.4 C.I. MIN.
FLOORS (MASS) (TANK-LEVEL BELOW GRADE WALLS INCLUDED): R-14.6 C.I. MIN.

HAZARD PROTECTION METHODS FOR GROUP H OCCUPANCIES (IBC 414.1.3):
MECHANICAL VENTILATION SYSTEMS: PROVIDED PER IBC 414.3, IFC 5004.3.1, IFC 5405.1.2, AND IFC 6003.1.5.3
AUTOMATIC SPRINKLER SYSTEM: NOT PROVIDED PER NFPA 400 (2013 EDITION) 6.2.1.1.4
AUTOMATIC FIRE DETECTION SYSTEM: PROVIDED PER IBC 415.3
EMERGENCY ALARMS: PROVIDED PER IBC 415.5 AND IFC 5004.9
TEMPERATURE AND PRESSURE CONTROL EQUIPMENT: PROVIDED PER IBC 414.4 AND IFC 5004.8
MONITOR CONTROL EQUIPMENT: PROVIDED PER IFC 5004.10
EMERGENCY POWER: PROVIDED PER IBC 414.5.2 AND IFC 5004.7
SPILL CONTROL, DRAINAGE, AND CONTAINMENT: PROVIDED PER IBC 414.5.3, IFC 5004.2.1, AND IFC 5004.2.2
LIQUID-TIGHT, NON-COMBUSTIBLE FLOOR CONSTRUCTION: PROVIDED PER IBC 415.10.3, IFC 5004.12, IFC 5404.1.1, AND IFC 6003.1.4.1
PIPING, TUBING, VALVES, FITTINGS, TANKS, AND EQUIPMENT STANDARDS: MET PER IFC 5003.2
LIQUID TRANSFER STANDARDS: MET PER IFC 5405.1.1 AND IFC 6003.1.5.1
SEISMIC PROTECTION OF MACHINERY AND EQUIPMENT: PROVIDED PER IFC 5003.2.8
SYSTEM TESTING AT TIME OF INSTALLATION: PROVIDED PER IFC 5003.2.9
HAZARD IDENTIFICATION SIGNS: PROVIDED PER IFC 5003.5
NO SMOKING SIGNS: PROVIDED PER IFC 5003.7.1

N

PUMPING PLANT NO. 4

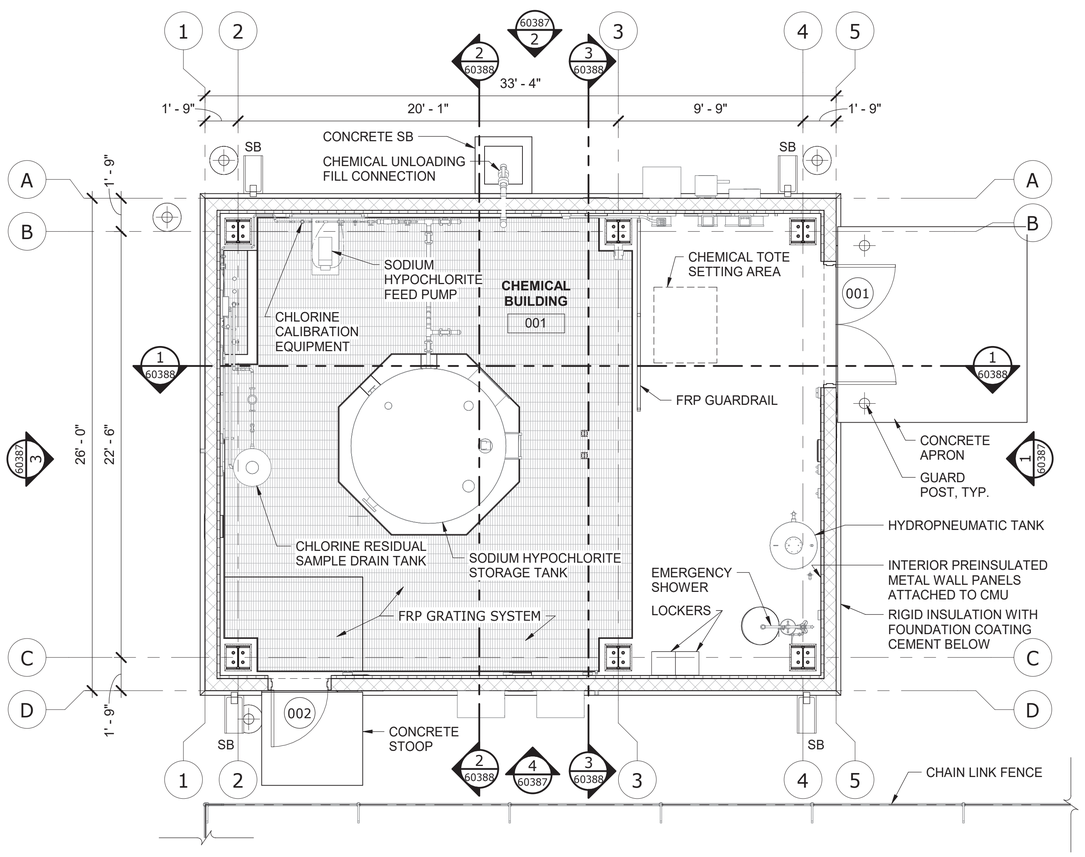

2 FLOOR PLAN - CHEMICAL BUILDING

0 2' 4' 8'

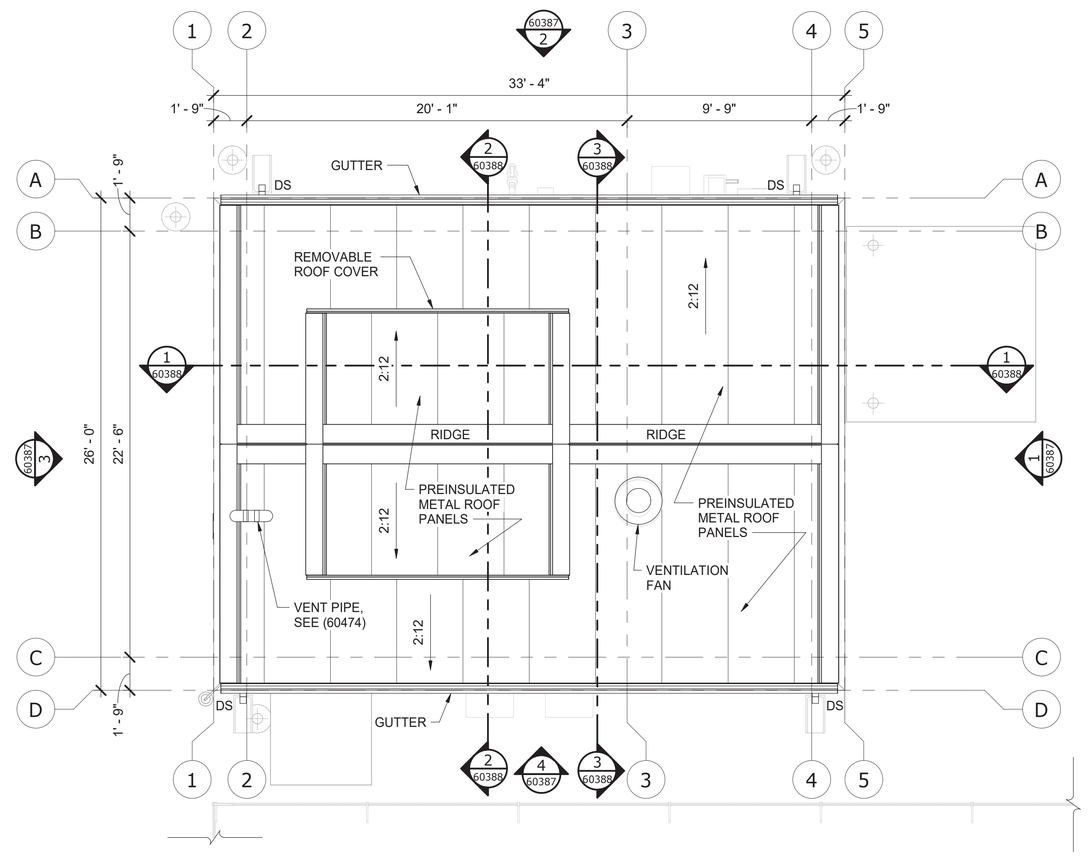

3 ROOF PLAN - CHEMICAL BUILDING

0 2' 4' 8'

NOTES

1. SEE (60366) FOR ARCHITECTURAL GENERAL NOTES, SYMBOLS, AND ABBREVIATIONS.
2. SEE (60377) FOR ROOF DETAILS.

ALWAYS THINK **SAFETY**

U.S. DEPARTMENT OF THE INTERIOR
BUREAU OF RECLAMATION
NAVAJO-GALLUP WATER SUPPLY PROJECT
NEW MEXICO

SAN JUAN LATERAL
PUMPING PLANT NOS. 4 AND 7

C. TOBIN
DESIGNED
C. TOBIN
DRAWN
KEVIN O'SHEA
CHECKED
TECH. APPR. KEVIN O'SHEA, P.E.
APPROVED ALFRED I. BERNSTEIN
Peer Reviewer - PLANT STRUCTURES GROUP

DENVER, CO 2020-01-24

CHEMICAL BUILDING ARCHITECTURAL

BUILDING CODE SUMMARY, LIFE SAFETY PLAN, FLOOR PLAN, AND ROOF PLAN

1695-D-60386

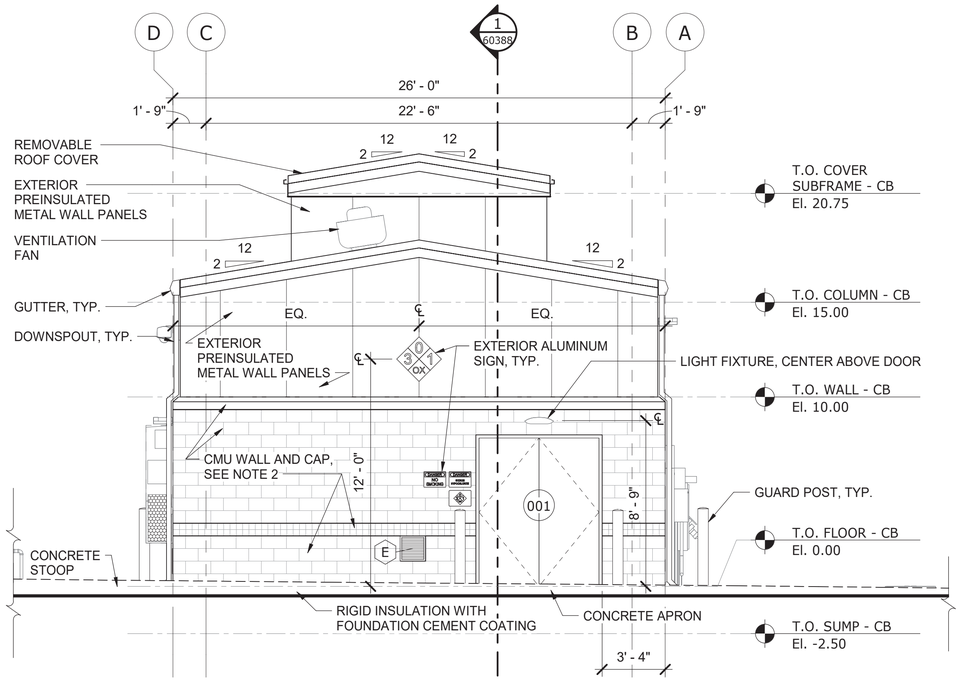

1 60386 SOUTH ELEVATION - CHEMICAL BUILDING

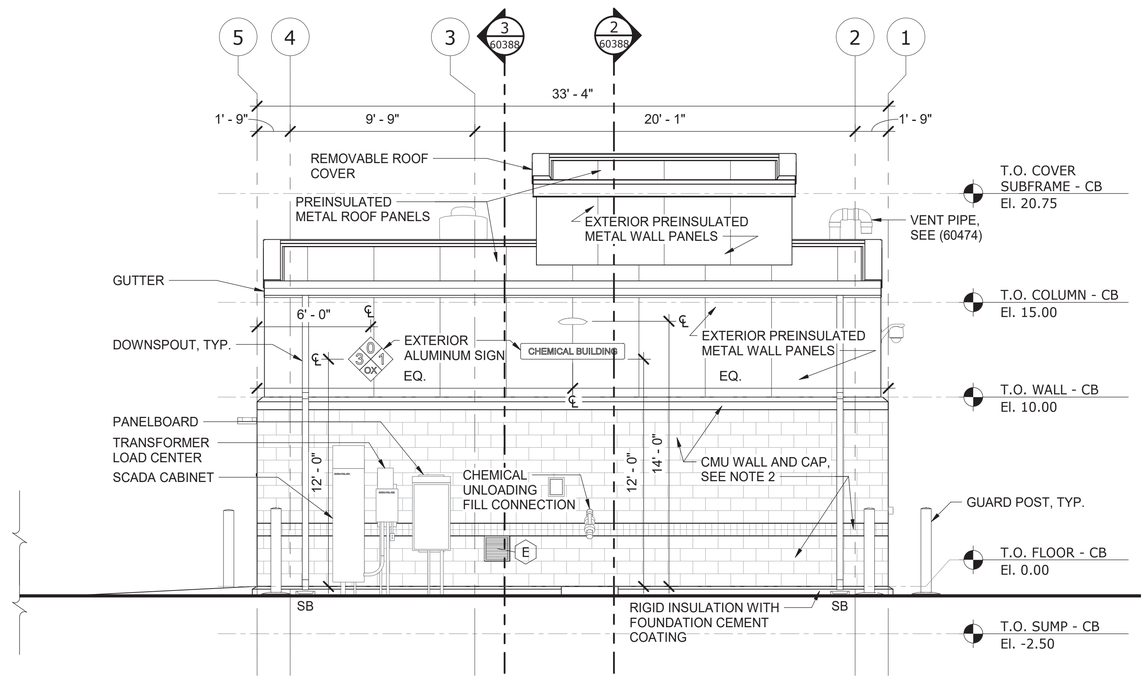

2 60386 EAST ELEVATION - CHEMICAL BUILDING

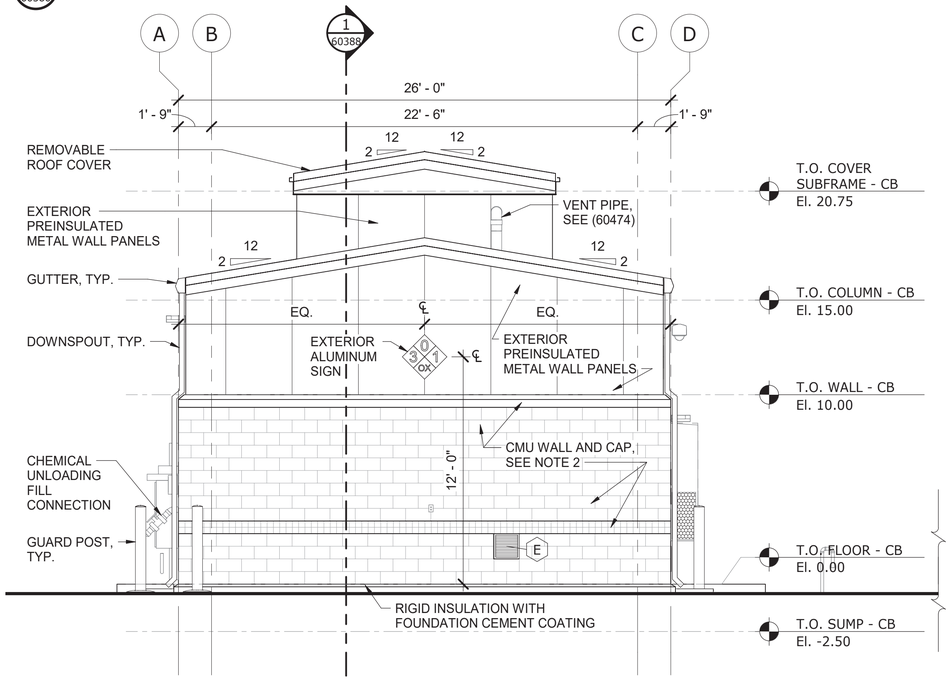

3 60386 NORTH ELEVATION - CHEMICAL BUILDING

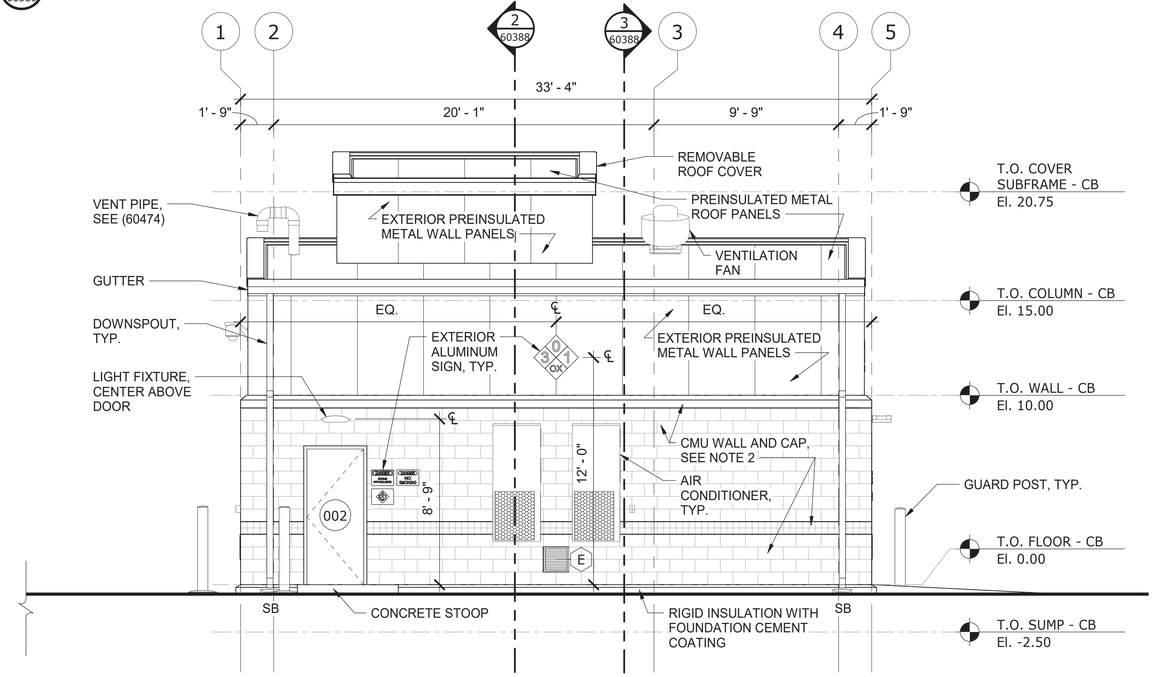

4 60386 WEST ELEVATION - CHEMICAL BUILDING

NOTES

1. SEE (60366) FOR ARCHITECTURAL GENERAL NOTES, SYMBOLS, AND ABBREVIATIONS.
2. SEE (60378) FOR CMU WALL COURSING AND PATTERN DETAILS.

0 2' 4' 8'

RECLAMATION
Managing Water in the West

ALWAYS THINK **SAFETY**

U.S. DEPARTMENT OF THE INTERIOR
BUREAU OF RECLAMATION
NAVAJO-GALLUP WATER SUPPLY PROJECT
NEW MEXICO

SAN JUAN LATERAL
PUMPING PLANT NOS. 4 AND 7

DESIGNED	C. TOBIN
DRAWN	C. TOBIN
CHECKED	KEVIN O'SHEA
TECH. APPR.	KEVIN O'SHEA, P.E.
APPROVED	ALFRED I. BERNSTEIN Peer Reviewer - PLANT STRUCTURES GROUP
DENVER, CO	2020-01-24

CHEMICAL BUILDING ARCHITECTURAL

EXTERIOR ELEVATIONS

1695-D-60387

RECLAMATION
Managing Water in the West

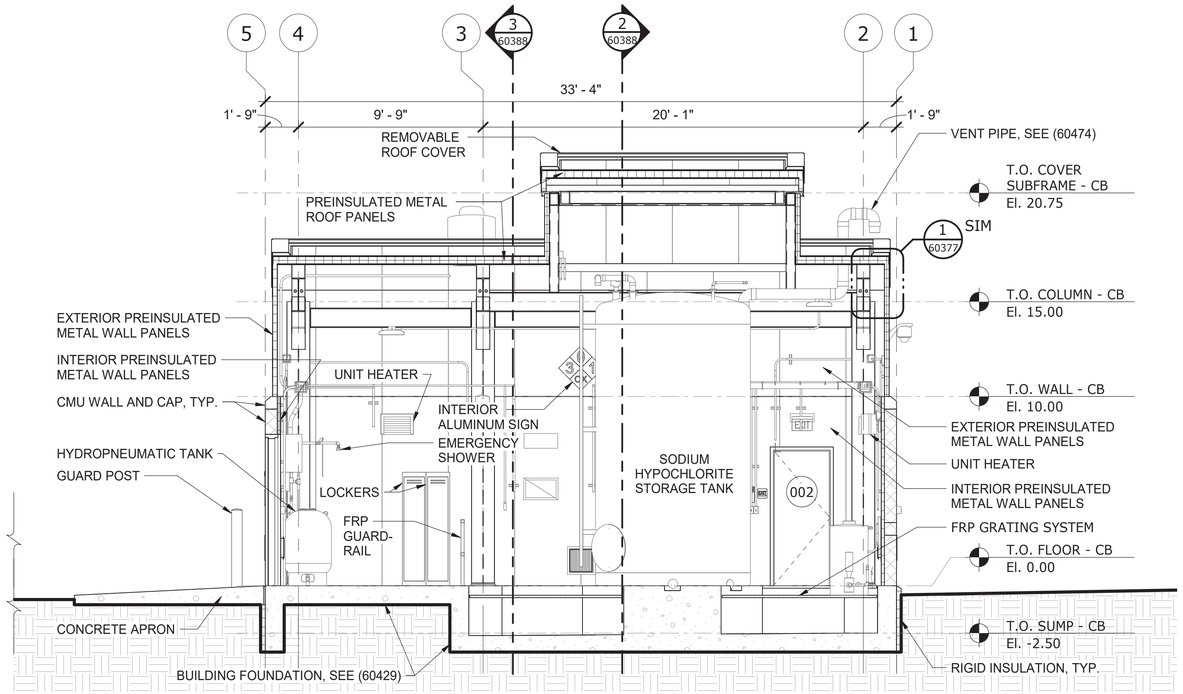

1 60386 BUILDING SECTION A - CHEMICAL BUILDING

NOTES

1. SEE (60366) FOR ARCHITECTURAL GENERAL NOTES, SYMBOLS, AND ABBREVIATIONS.

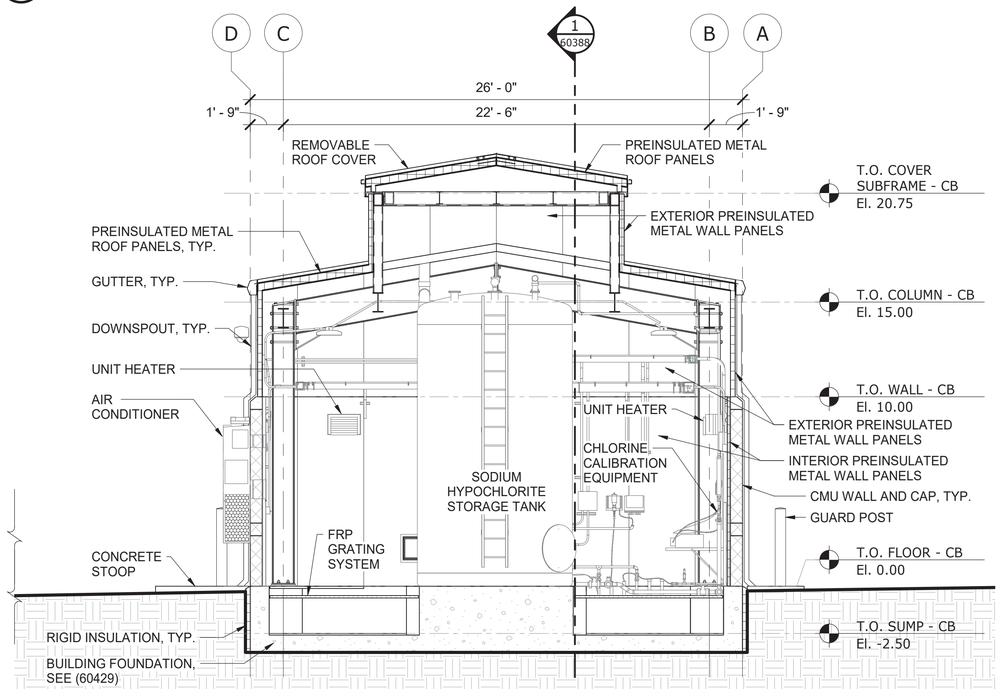

2 60386 BUILDING SECTION B - CHEMICAL BUILDING

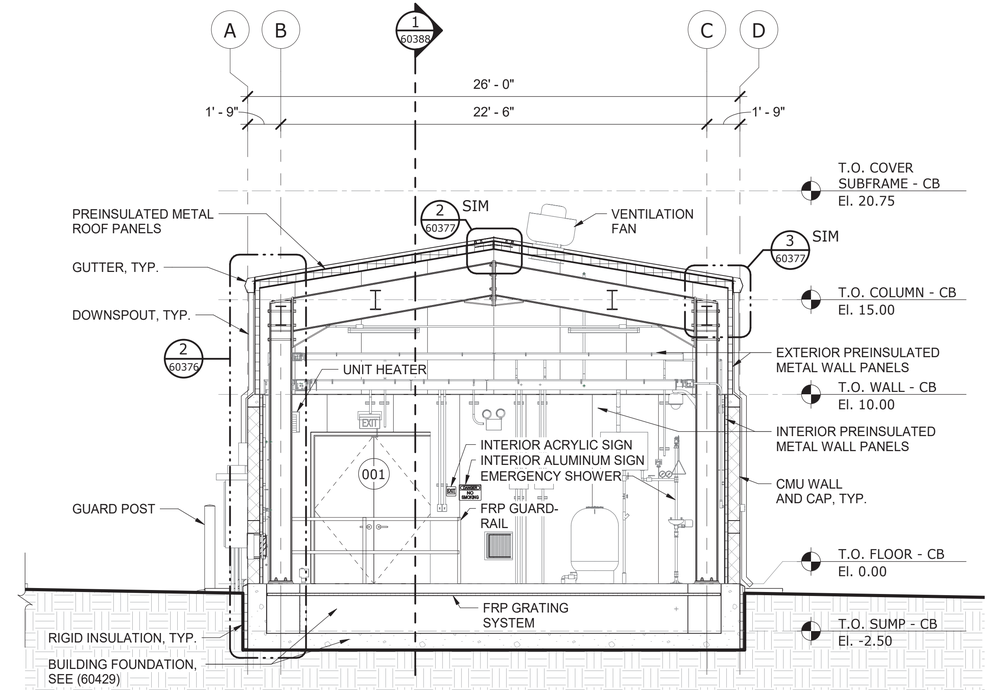

3 60386 BUILDING SECTION C - CHEMICAL BUILDING

0 2' 4' 8'

ALWAYS THINK **SAFETY**

U.S. DEPARTMENT OF THE INTERIOR
BUREAU OF RECLAMATION

NAVAJO-GALLUP WATER SUPPLY PROJECT
NEW MEXICO

SAN JUAN LATERAL
PUMPING PLANT NOS. 4 AND 7

DESIGNED	C. TOBIN
DRAWN	C. TOBIN
CHECKED	KEVIN O'SHEA
TECH. APPR.	KEVIN O'SHEA, P.E.
APPROVED	ALFRED I. BERNSTEIN Peer Reviewer - PLANT STRUCTURES GROUP
DENVER, CO	2020-01-24

CHEMICAL BUILDING ARCHITECTURAL

BUILDING SECTIONS

1695-D-60388

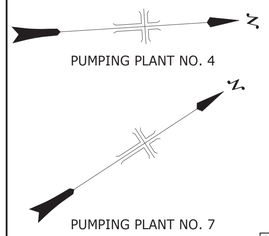

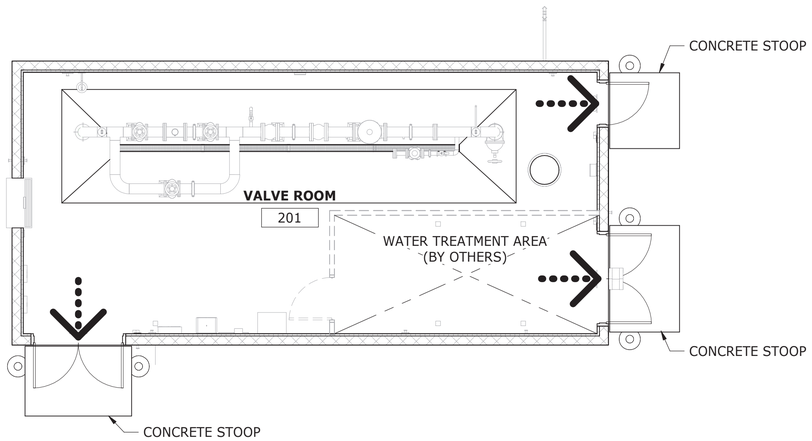

LIFE SAFETY PLAN - TURNOUT BUILDING

Scale: 3/16" = 1'-0"

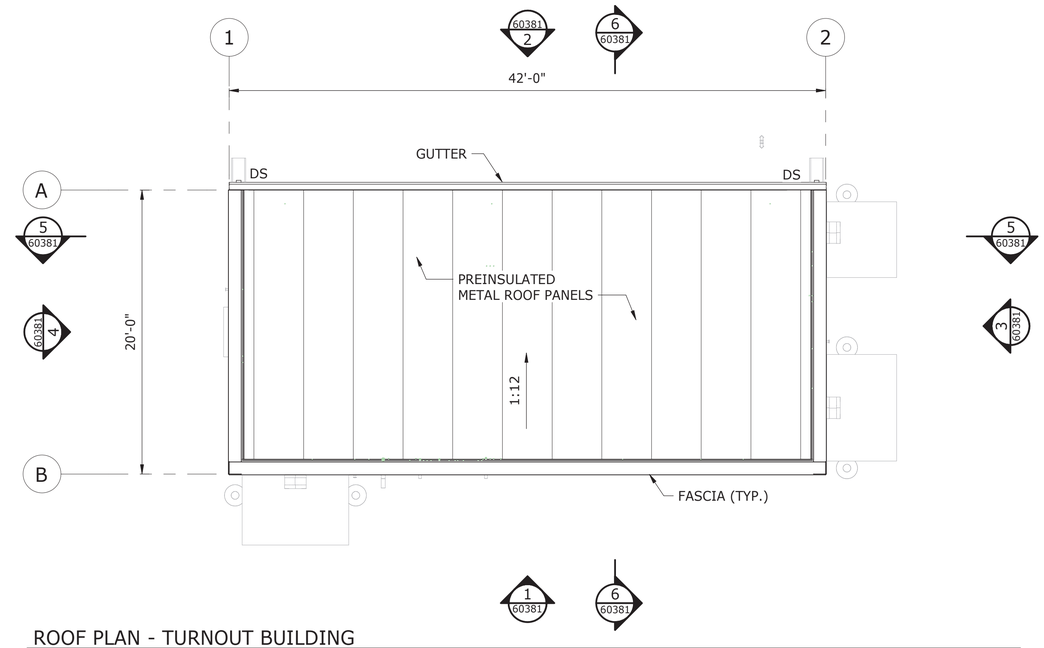

ROOF PLAN - TURNOUT BUILDING

Scale: 3/16" = 1'-0"

BUILDING CODE SUMMARY - TURNOUT BUILDING

ALL WORK TO COMPLY WITH THE 2015 INTERNATIONAL BUILDING CODE (IBC)

OCCUPANCY TYPE:
MODERATE-HAZARD FACTORY INDUSTRIAL GROUP F-1 (IBC 306.2)

CONSTRUCTION TYPE: V-B (IBC 602.5)

ALLOWABLE AREA: 8,500 SF (IBC TABLE 506.2)
ACTUAL AREA: 743 SF (CALCULATED AS DEFINED PER IBC 502.1)

ALLOWABLE HEIGHT: 40 FEET, 1 STORY (IBC TABLES 504.3 AND 504.4)
ACTUAL HEIGHT: 9 FEET-8 INCHES, 1 STORY (CALCULATED AS DEFINED PER IBC 502.1)

OCCUPANT LOAD (IBC TABLE 1004.1.2):
743 SF "INDUSTRIAL AREAS" / 100 GROSS = 8 TOTAL OCCUPANT LOAD

REQUIRED NUMBER OF EXITS: TWO (IBC TABLES 1006.2.1 AND 1006.3.1)
NUMBER OF EXITS PROVIDED: THREE

FIRE RESISTANCE RATINGS (IBC TABLE 601):
PRIMARY STRUCTURAL FRAME: 0 HOURS
BEARING WALLS (EXTERIOR AND INTERIOR): 0 HOURS
NONBEARING WALLS AND PARTITIONS, EXTERIOR: 0 HOURS (IBC TABLE 602)
NONBEARING WALLS AND PARTITIONS, INTERIOR: 0 HOURS
FLOOR CONSTRUCTION AND ASSOCIATED SECONDARY MEMBERS: 0 HOURS
ROOF CONSTRUCTION AND ASSOCIATED SECONDARY MEMBERS: 0 HOURS

PLUMBING FIXTURES: NOT PROVIDED (IBC 2902.1)

CLIMATE ZONE (ASHRAE 90.1): 5B
INSULATION VALUES:
ROOF (INSULATION ENTIRELY ABOVE DECK): R-30 C.I. MIN.
WALLS, ABOVE GRADE (MASS): R-11.4 C.I. MIN.

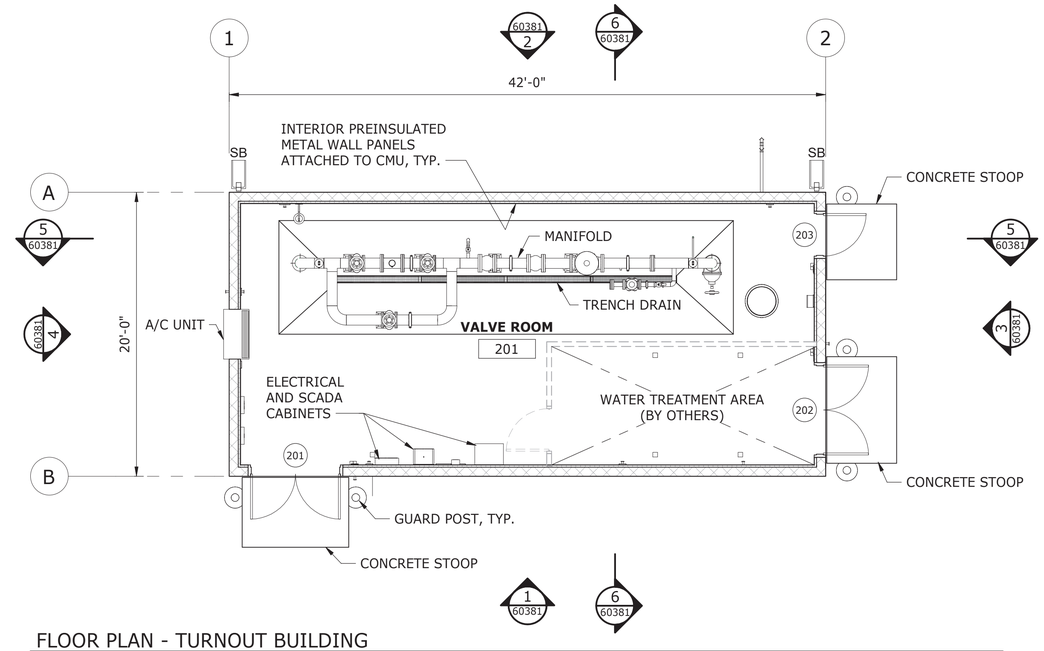

FLOOR PLAN - TURNOUT BUILDING

Scale: 3/16" = 1'-0"

NOTES

1. FOR ARCHITECTURAL GENERAL NOTES, SYMBOLS, AND ABBREVIATIONS, SEE (60366).
2. UPON THE COMPLETION OF WATER TREATMENT AREA (BY OTHERS), THE BUILDING CODE ANALYSIS PROVIDED HEREIN WILL NO LONGER BE VALID AND WILL REQUIRE REVISION.
3. SEE (60382) FOR ROOF DETAILS.

0 5' 10'
Scale: 3/16" = 1'-0"

RECLAMATION
Managing Water in the West

ALWAYS THINK SAFETY

U.S. DEPARTMENT OF THE INTERIOR
BUREAU OF RECLAMATION
NAVAJO-GALLUP WATER SUPPLY PROJECT
NEW MEXICO
SAN JUAN LATERAL
PUMPING PLANT NOS. 4 AND 7

Sara Putnam
DESIGNED
Sara Putnam
DRAWN
Kevin O'Shea
CHECKED
TECH. APPR. Kevin O'Shea, P.E.
APPROVED Alfred I. Bernstein
Peer Reviewer - Plant Structures Group

DENVER, CO 2020-01-24

TURNOUT BUILDING ARCHITECTURAL

BUILDING CODE SUMMARY, LIFE SAFETY PLAN, FLOOR PLAN, AND ROOF PLAN

1695-D-60380

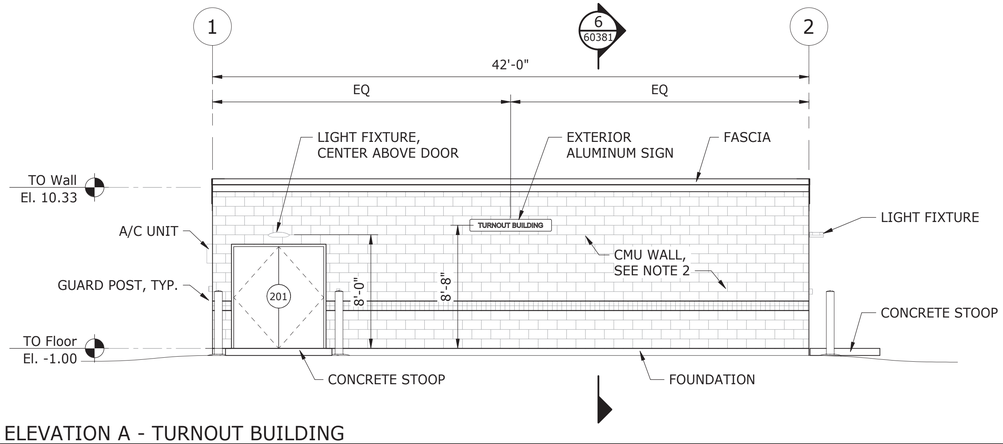

1 60380 ELEVATION A - TURNOUT BUILDING

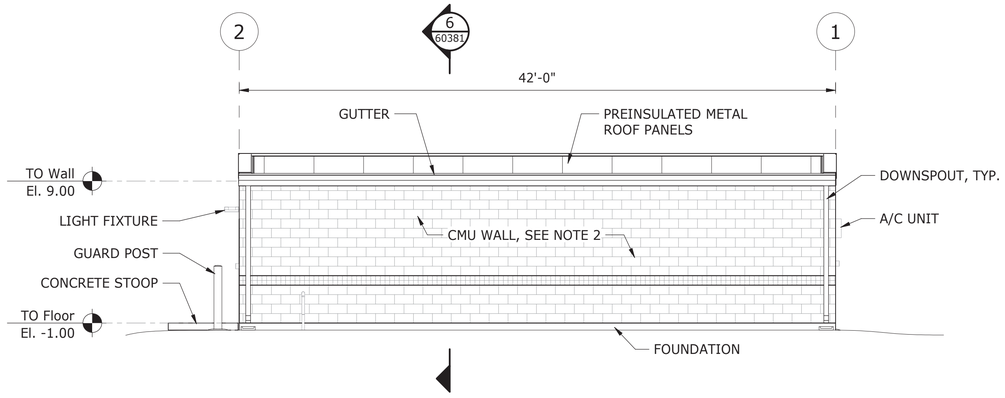

2 60380 ELEVATION B - TURNOUT BUILDING
Scale: 3/16" = 1'-0"

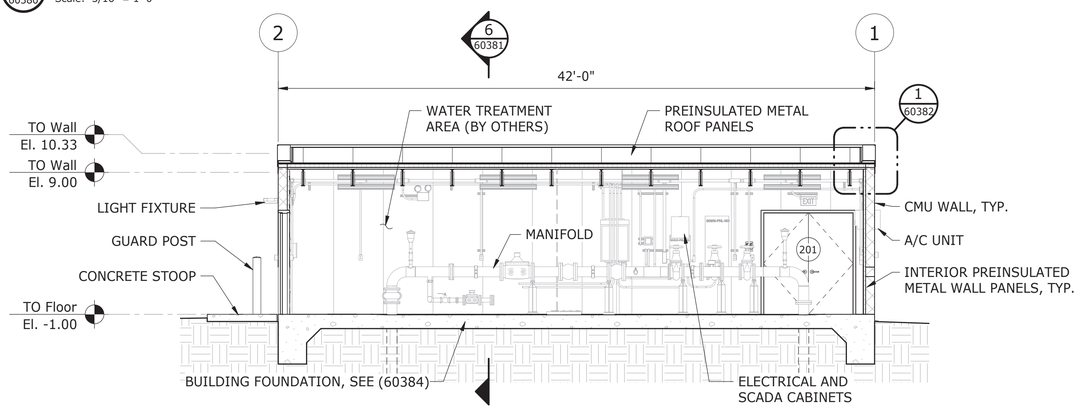

5 60380 BUILDING SECTION A - TURNOUT BUILDING
Scale: 3/16" = 1'-0"

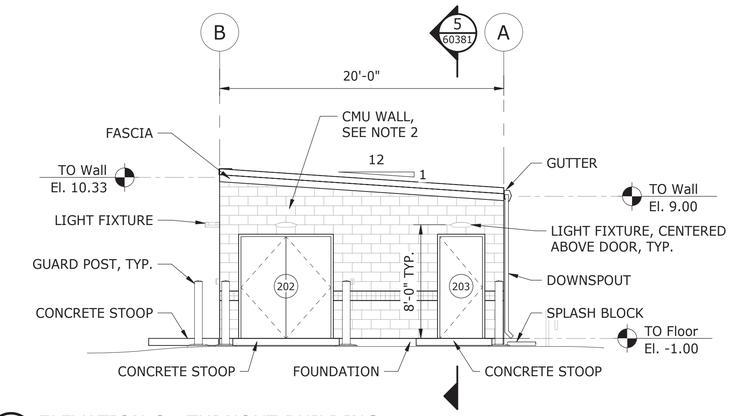

3 60380 ELEVATION C - TURNOUT BUILDING
Scale: 3/16" = 1'-0"

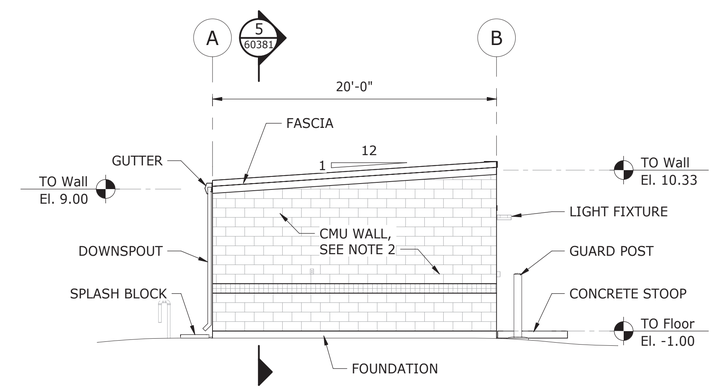

4 60380 ELEVATION D - TURNOUT BUILDING
Scale: 3/16" = 1'-0"

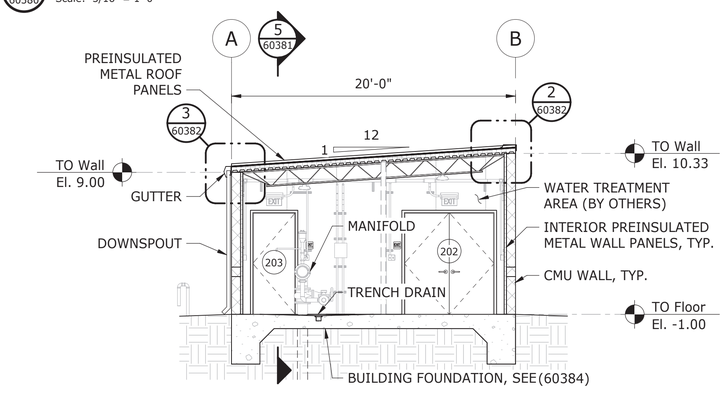

6 60380 BUILDING SECTION B - TURNOUT BUILDING
Scale: 3/16" = 1'-0"

NOTES

1. FOR ARCHITECTURAL GENERAL NOTES, SYMBOLS, AND ABBREVIATIONS, SEE (60366).
2. SEE (60382) FOR CMU WALL COURSING AND PATTERN DETAILS.

0 5' 10'
Scale: 3/16" = 1'-0"

RECLAMATION
Managing Water in the West

ALWAYS THINK **SAFETY**

U.S. DEPARTMENT OF THE INTERIOR
BUREAU OF RECLAMATION
NAVAJO-GALLUP WATER SUPPLY PROJECT
NEW MEXICO

SAN JUAN LATERAL
PUMPING PLANT NOS. 4 AND 7

Sara Putnam
DESIGNED
Sara Putnam
DRAWN
Kevin O'Shea
CHECKED
TECH. APPR. Kevin O'Shea, P.E.
APPROVED Alfred I. Bernstein
Peer Reviewer - Plant Structures Group

DENVER, CO 2020-01-24

TURNOUT BUILDING ARCHITECTURAL

EXTERIOR ELEVATIONS AND BUILDING SECTIONS

1695-D-60381

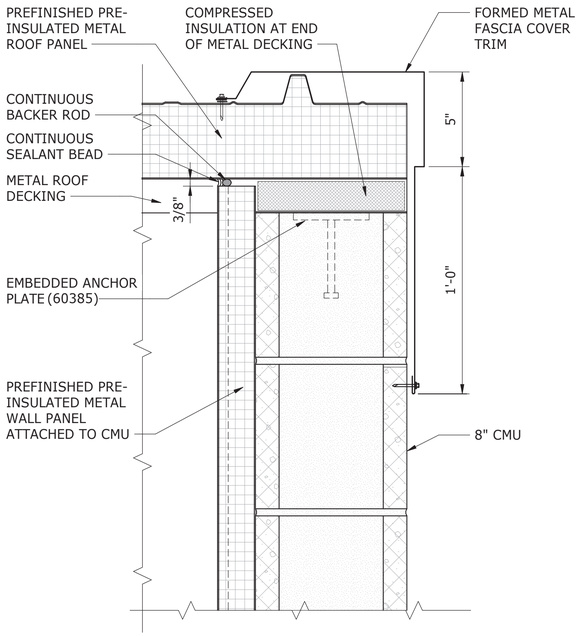

1 60381 RAKE DETAIL

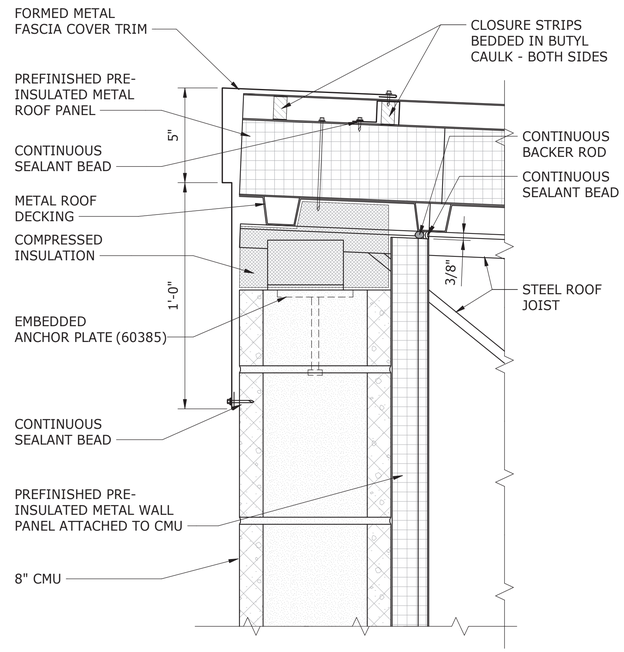

2 60381 HIGH EAVE DETAIL

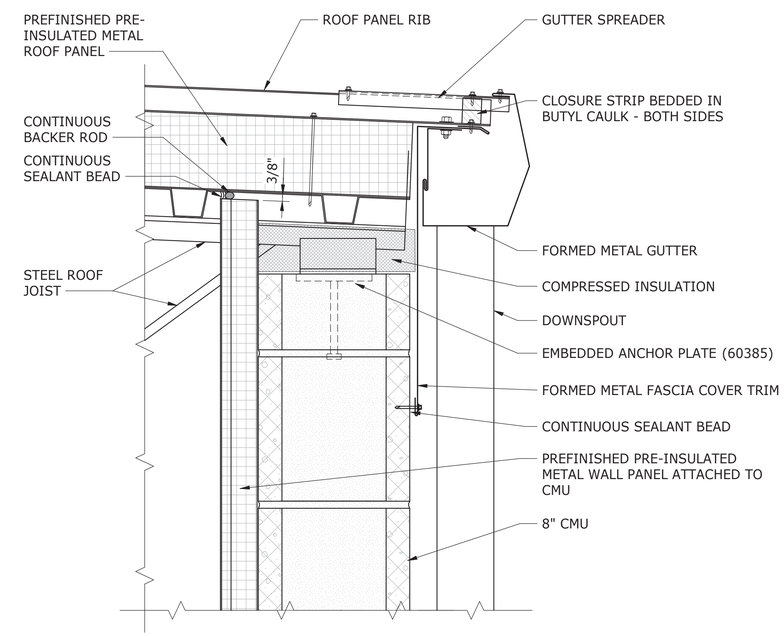

3 60381 LOW EAVE DETAIL

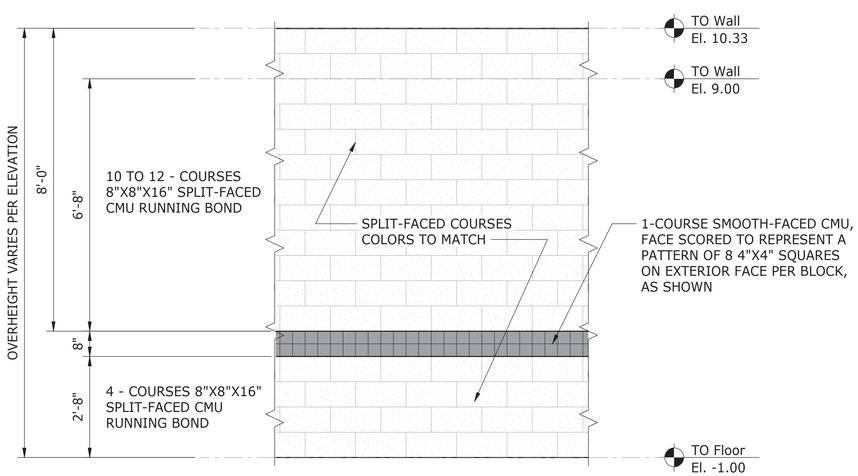

TYPICAL MASONRY UNIT COURSING AT ENCLOSURE WALLS

NOTES

1. FOR ARCHITECTURAL GENERAL NOTES, SYMBOLS, AND ABBREVIATIONS, SEE (60366).
2. FOR TYPICAL THRU WALL PANEL ATTACHMENT DETAILS, SEE (60379).

RECLAMATION
Managing Water in the West

ALWAYS THINK **SAFETY**

U.S. DEPARTMENT OF THE INTERIOR
BUREAU OF RECLAMATION
NAVAJO-GALLUP WATER SUPPLY PROJECT
NEW MEXICO
SAN JUAN LATERAL
PUMPING PLANT NOS. 4 AND 7

DESIGNED	Sara Putnam
DRAWN	Sara Putnam
CHECKED	Kevin O'Shea
TECH. APPR.	Kevin O'Shea, P.E.
APPROVED	Alfred I. Bernstein, Peer Reviewer - Plant Structures Group
DENVER, CO	2020-01-24

TURNOUT BUILDING ARCHITECTURAL

DETAILS

1695-D-60382

RECLAMATION
Managing Water in the West

SIGN SCHEDULE

DESCRIPTION	SIGN TYPE	SIGN TEXT	REMARKS	QUANT.	DWG. REF.
BUILDING IDENTITY SIGN: TURNOUT BUILDING	EXTERIOR ALUMINUM	TO BE DETERMINED BY GOVERNMENT	SEE 1/60381 FOR MOUNTING LOCATION, SEE DETAIL 1 FOR SIGN DETAILS	1	1/60381
WATER QUALITY SAMPLING STATION ONLY SIGN	INTERIOR ALUMINUM	"WATER QUALITY SAMPLING STATION ONLY"	LOCATE AT GRAB SAMPLE TAPS, SEE DETAIL 7/60375 FOR SIGN DETAILS	2	-
EXIT SIGNS	INTERIOR ACRYLIC	"EXIT"	SEE DETAIL 2 FOR TYPICAL MOUNTING LOCATION, MOUNT AT ALL EGRESS DOORS (201, 202, & 203), SEE DETAIL 8/60375 FOR SIGN DETAILS	3	-

DOOR SCHEDULE

DOOR NUMBER	DOOR						FRAME			DETAIL			REMARKS
	WIDTH	HEIGHT	THK	TYPE	MAT'L	FINISH	TYPE	MAT'L	FINISH	HEAD	JAMB	THRHLD	
201	6'-0"	7'-10"	1 3/4"	A	STEEL	PAINTED	1	STEEL	PAINTED	4	6	5	EXTERIOR, PAIRED DOORS, GROUTED FRAME.
202	6'-0"	7'-10"	1 3/4"	A	STEEL	PAINTED	1	STEEL	PAINTED	4	6	5	EXTERIOR, PAIRED DOORS, GROUTED FRAME.
203	3'-0"	7'-2"	1 3/4"	B	STEEL	PAINTED	2	STEEL	PAINTED	4	6	5	EXTERIOR, SINGLE DOOR, GROUTED FRAME.

1 DETAIL

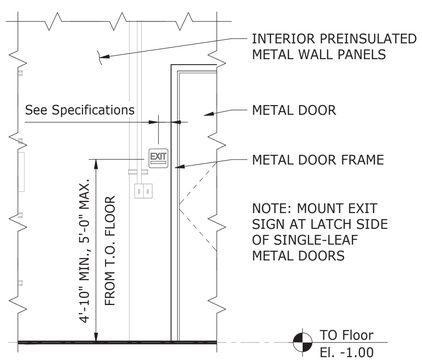

2 DETAIL

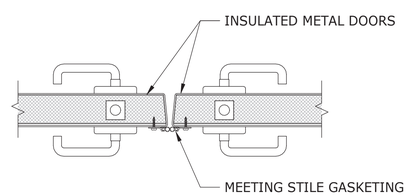

3 DETAIL

NOTES

1. FOR ARCHITECTURAL GENERAL NOTES, SYMBOLS, AND ABBREVIATIONS, SEE (60366).
2. FOR DOOR AND FRAME DETAILS, SEE (60374).
3. FOR ADDITIONAL SIGN DETAILS, SEE (60375).

ALWAYS THINK **SAFETY**

U.S. DEPARTMENT OF THE INTERIOR
BUREAU OF RECLAMATION
NAVAJO-GALLUP WATER SUPPLY PROJECT
NEW MEXICO
SAN JUAN LATERAL
PUMPING PLANT NOS. 4 AND 7

Sara Putnam
DESIGNED
Sara Putnam
DRAWN
Kevin O'Shea
CHECKED
TECH. APPR. Kevin O'Shea, P.E.
APPROVED Alfred I. Bernstein
Peer Reviewer - Plant Structures Group

DENVER, CO 2020-01-24

TURNOUT BUILDING ARCHITECTURAL

DOOR AND SIGN SCHEDULES AND DETAILS

1695-D-60383

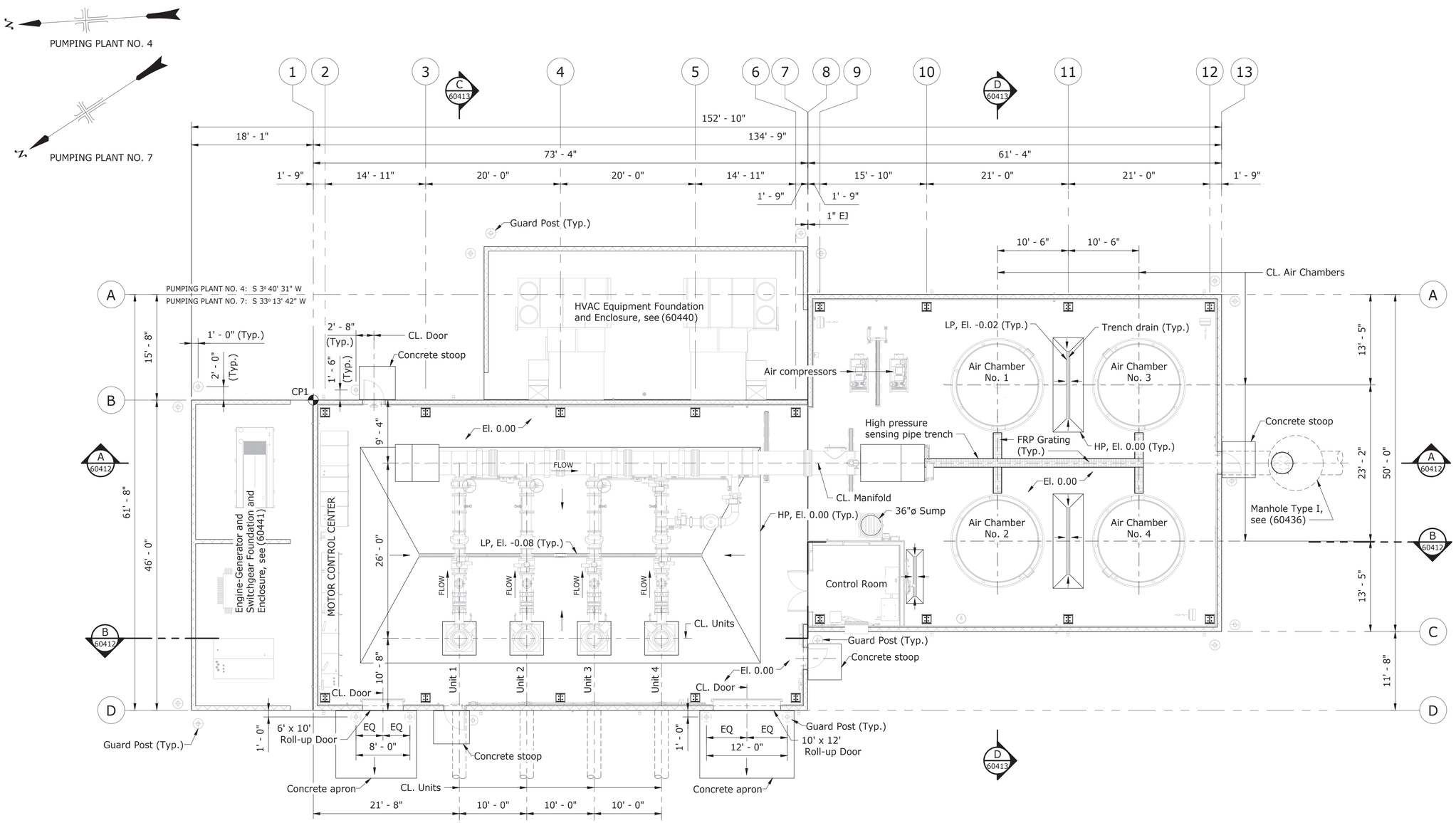

PLAN

Scale: 1/8" = 1'-0"

PUMPING PLANT	PUMP UNIT MOTOR HORSEPOWER			
	Unit 1	Unit 2	Unit 3	Unit 4
PUMPING PLANT NO. 4	1,000	1,000	1,000	1,000
PUMPING PLANT NO. 7	900	900	900	900

PUMPING PLANT	DATUM (FT)
PUMPING PLANT NO. 4	EL. 5867.50
PUMPING PLANT NO. 7	EL. 6215.00

NOTES:
1. All elevations are based on NAVD88 vertical datum.
2. The datum elevation(s) identified in the table correspond to the El. 0.0 elevation identified on the drawing. All elevations reported on the drawings are relative to the El. 0.0 elevation unless noted otherwise.

0 4' 8' 16'
Scale: 1/8" = 1'-0"

NOTES

1. For Structural Design Data and Loads, see (60399) and (60400).
2. Pumping Plant No. 4 control point coordinates, see (60403).
3. Pumping Plant No. 7 control point coordinates, see (60406).
4. For Drawing Index, see (60396) and (60397).
5. All guard posts are Type I, see 40-D-60002.

RECLAMATION
Managing Water in the West

ALWAYS THINK **SAFETY**

U.S. DEPARTMENT OF THE INTERIOR
BUREAU OF RECLAMATION
NAVAJO-GALLUP WATER SUPPLY PROJECT
NEW MEXICO

SAN JUAN LATERAL
PUMPING PLANT NOS. 4 AND 7

Kevin O'Shea
DESIGNED
Kevin O'Shea
DRAWN
Brandon Jackson
CHECKED
Brandon Jackson P.E.
TECH. APPR. Brandon Jackson, P.E.
APPROVED Alfred I. Bernstein
Peer Reviewer - Plant Structures Group

DENVER, CO 2020-01-24

PUMPING PLANT GENERAL ARRANGEMENT

PLAN

1695-D-60411

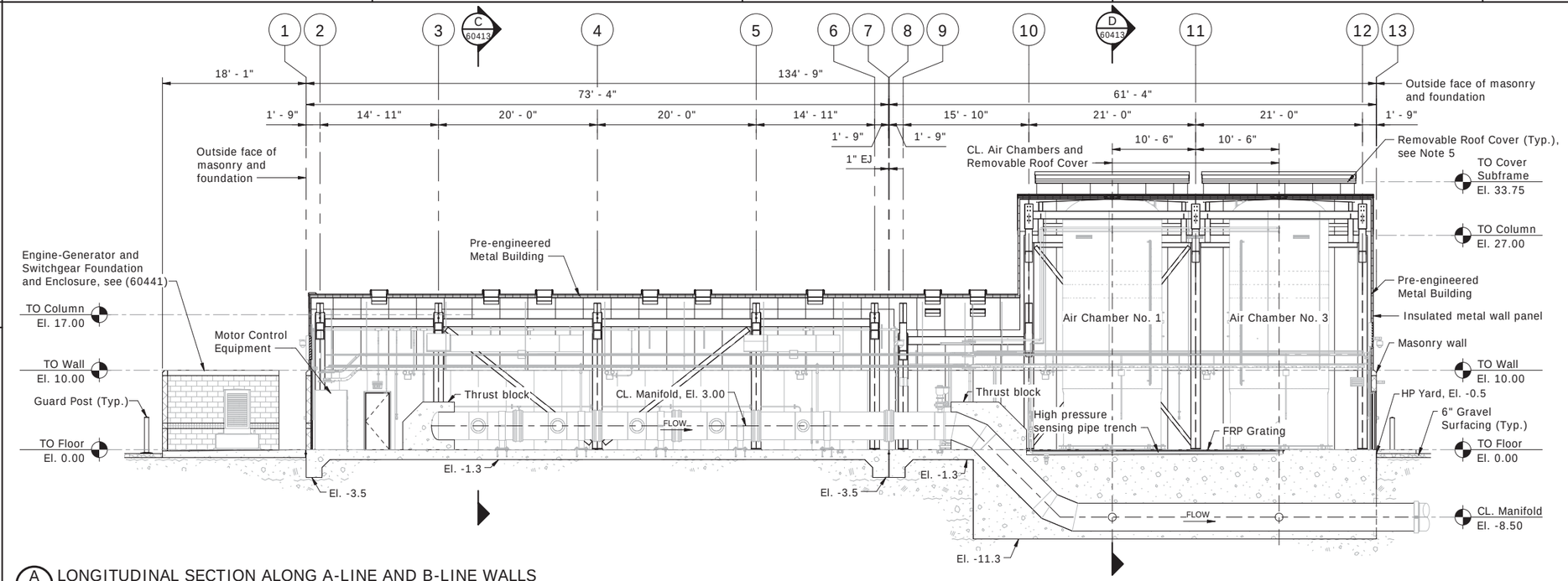

A 60411 LONGITUDINAL SECTION ALONG A-LINE AND B-LINE WALLS

Scale: 1/8" = 1'-0"

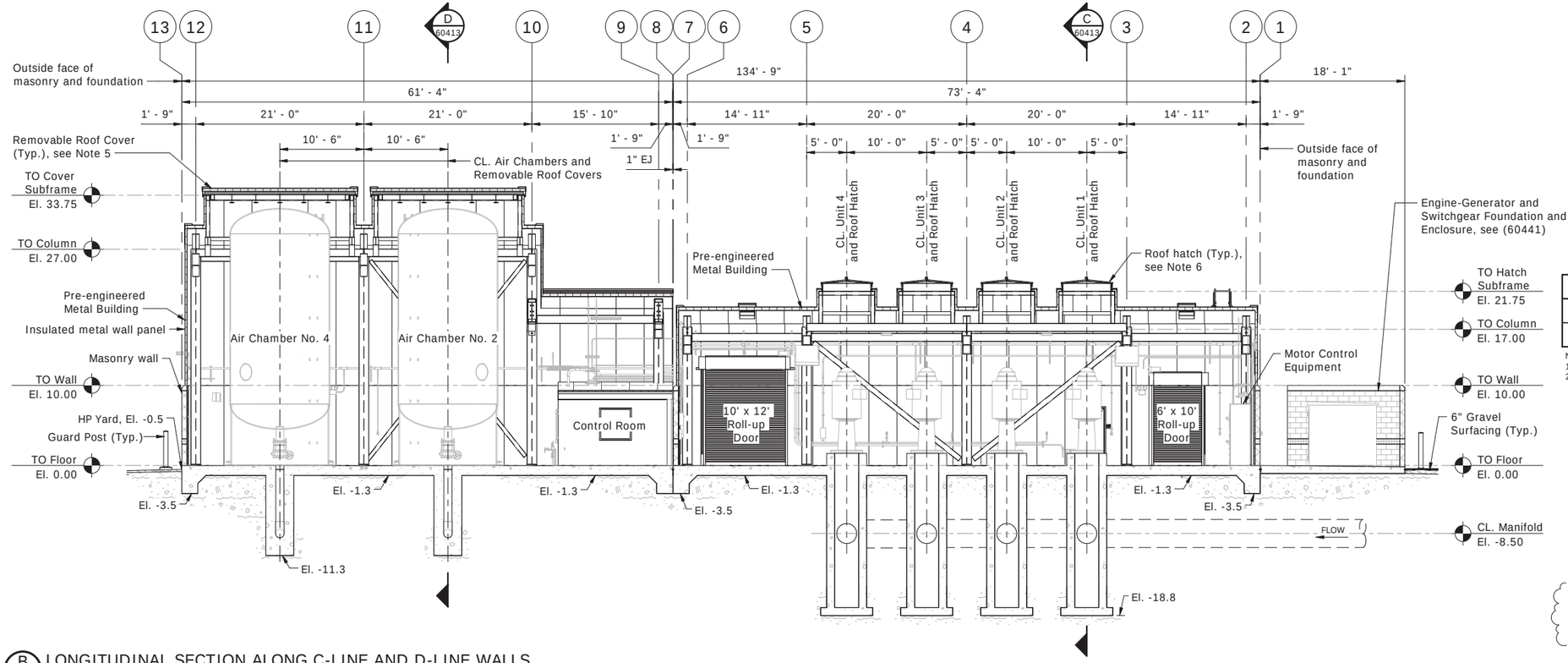

B 60411 LONGITUDINAL SECTION ALONG C-LINE AND D-LINE WALLS

Scale: 1/8" = 1'-0"

PUMPING PLANT	DATUM (FT)
PUMPING PLANT NO. 4	EL. 5867.50
PUMPING PLANT NO. 7	EL. 6215.00

NOTES:
1. All elevations are based on NAVD88 vertical datum.
2. The datum elevation(s) identified in the table correspond to the El. 0.0 elevation identified on the drawing. All elevations reported on the drawings are relative to the El. 0.0 elevation unless noted otherwise.

NOTES

1. For Structural Design Data and Loads, see (60399) and (60400).
2. For Drawing Index, see (60396) and (60397).
3. For foundation excavation requirements, see (60409) and (60410).
4. All guard posts are Type I, see 40-D-60002.
5. Removable roof cover subframe shall provide a 17'-6" x 17'-6" clear opening for installation and removal of the air chambers.
6. Government determines required roof hatch clear opening for installation and removal of the pump and motor units after reciept of approved Contractor-furnished drawings and data for the electrical and mechanical equipment.

0 4' 8' 16'
Scale: 1/8" = 1'-0"

RECLAMATION
Managing Water in the West

ALWAYS THINK SAFETY

U.S. DEPARTMENT OF THE INTERIOR
BUREAU OF RECLAMATION
NAVAJO-GALLUP WATER SUPPLY PROJECT
NEW MEXICO

SAN JUAN LATERAL
PUMPING PLANT NOS. 4 AND 7

REV NO	STA	2020-06-19	Revised Note 6.
1	D	Kevin O'Shea, P.E.	

Kevin O'Shea
DESIGNED
Kevin O'Shea
DRAWN
Brandon Jackson
CHECKED
Brandon Jackson, P.E.
TECH. APPR. Brandon Jackson, P.E.
Alfred I. Bernstein
APPROVED Alfred I. Bernstein
Peer Reviewer - Plant Structures Group

DENVER, CO 2020-01-24

PUMPING PLANT GENERAL ARRANGEMENT

SECTIONS

1695-D-60412

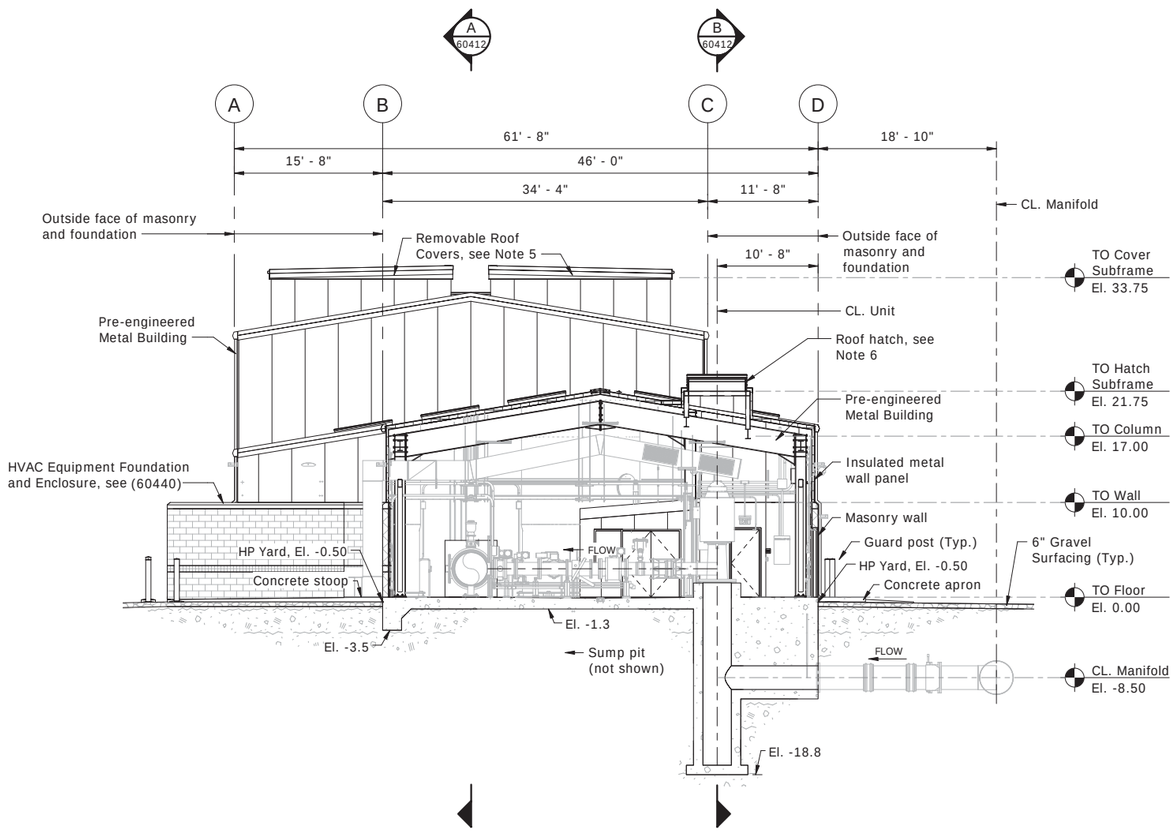

C 60411 TRANSVERSE SECTION THRU UNIT 1

Scale: 1/8" = 1'-0"

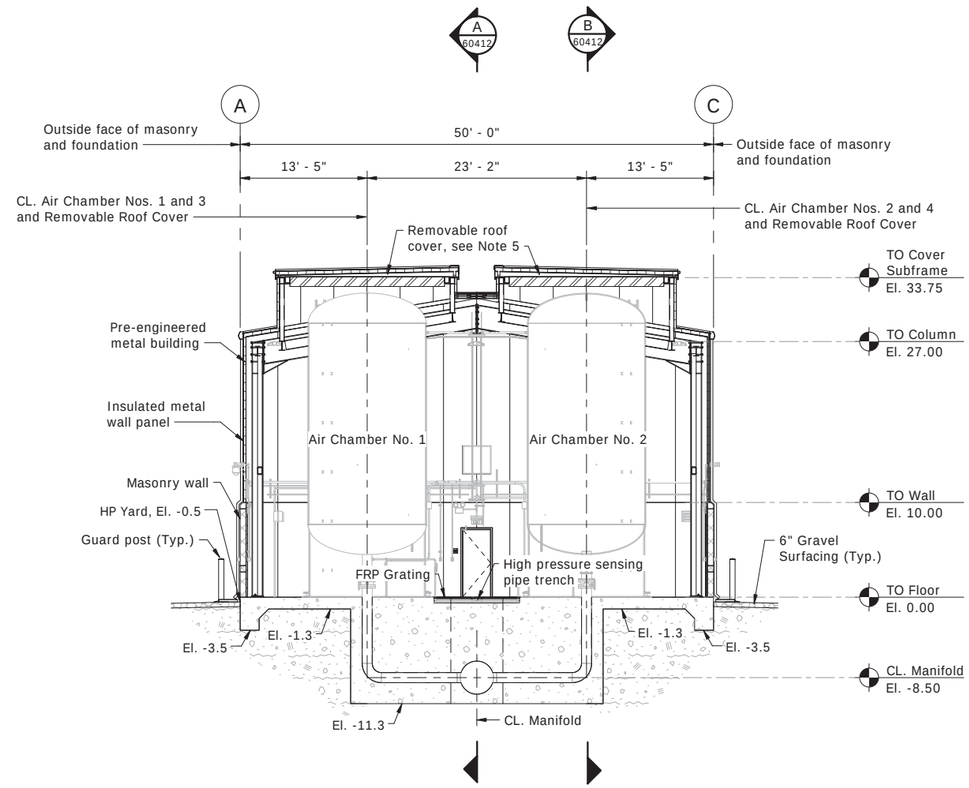

D 60411 TRANSVERSE SECTION THRU AIR CHAMBER NOS. 1 AND 2

Scale: 1/8" = 1'-0"

PUMPING PLANT	DATUM (FT)
PUMPING PLANT NO. 4	EL. 5867.50
PUMPING PLANT NO. 7	EL. 6215.00

NOTES:
1. All elevations are based on NAVD88 vertical datum.
2. The datum elevation(s) identified in the table correspond to the El. 0.0 elevation identified on the drawing. All elevations reported on the drawings are relative to the El. 0.0 elevation unless noted otherwise.

0 4' 8' 16'
Scale: 1/8" = 1'-0"

NOTES

1. For Structural Design Data and Loads, see (60399) and (60400).
2. For Drawing Index, see (60396) and (60397).
3. For foundation excavation requirements, see (60409) and (60410).
4. All guard posts are Type I, see 40-D-60002.
5. Removable roof cover subframe shall provide a 17'-6" x 17'-6" clear opening for installation and removal of the air chambers.
6. Government determines required roof hatch clear opening for installation and removal of the pump and motor units after reciept of approved Contractor-furnished drawings and data for the electrical and mechanical equipment.

RECLAMATION
Managing Water in the West

ALWAYS THINK SAFETY

U.S. DEPARTMENT OF THE INTERIOR
BUREAU OF RECLAMATION
NAVAJO-GALLUP WATER SUPPLY PROJECT
NEW MEXICO

SAN JUAN LATERAL
PUMPING PLANT NOS. 4 AND 7

REV NO	STA	2020-06-19	Revised Note 6
1	D	Kevin O'Shea, P.E.	

Kevin O'Shea
DESIGNED
Kevin O'Shea
DRAWN
Brandon Jackson
CHECKED
Brandon Jackson, P.E.
TECH. APPR.
Alfred I. Bernstein
APPROVED
Peer Reviewer - Plant Structures Group

DENVER, CO 2020-01-24

PUMPING PLANT GENERAL ARRANGEMENT

SECTIONS

1695-D-60413

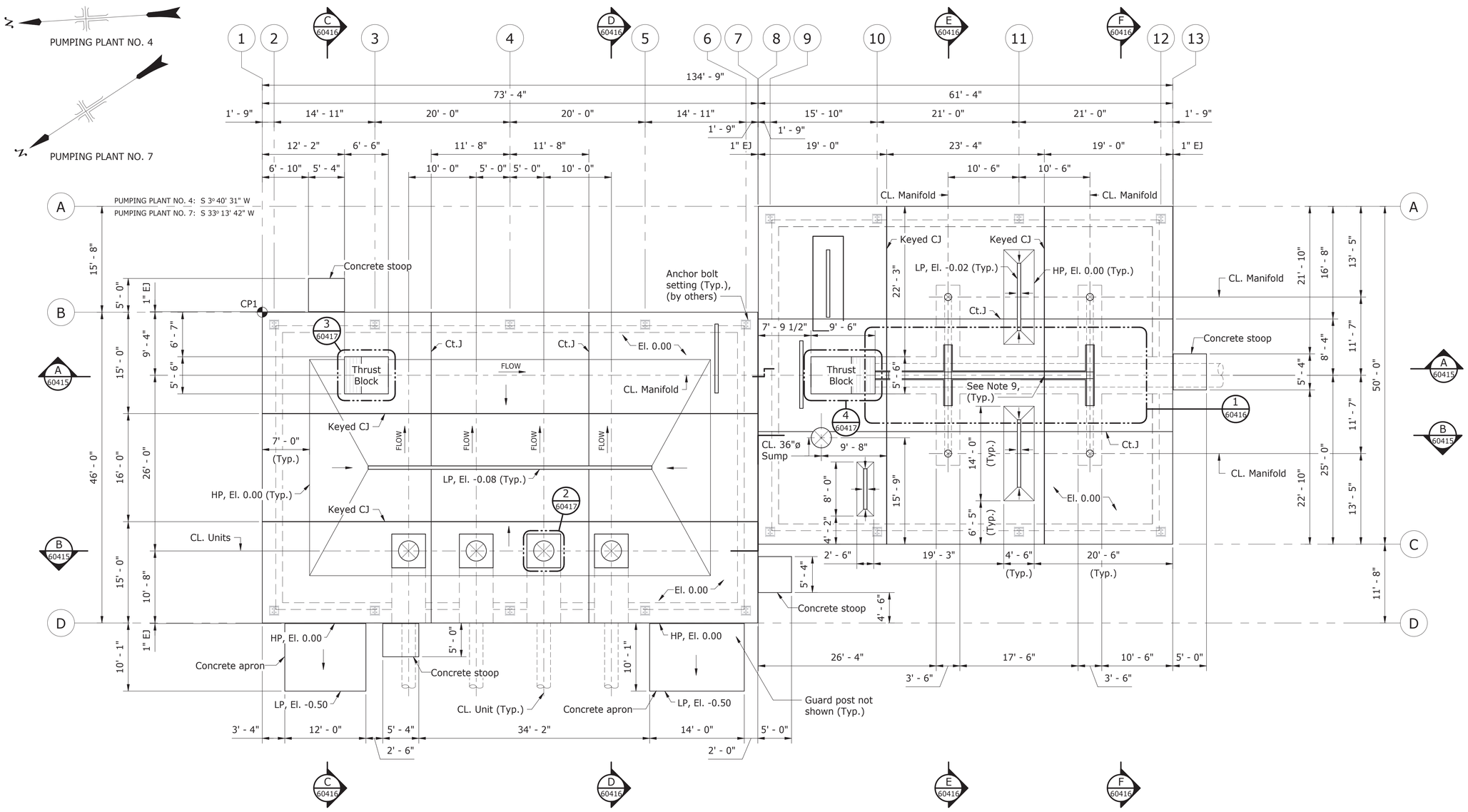

PLAN

Scale: 1/8" = 1'-0"

CONCRETE OUTLINE GENERAL NOTES

For abbreviations, concrete symbols, and additional concrete outline general notes, see 40-D-60003.

Structural design for cast-in-place structural concrete is based on concrete with a compressive strength of 4,500 pounds per square inch at 28 days and reinforcement with a minimum yield strength of 60,000 pounds per square inch.

Dimensions not shown are the same dimensions for identical details and sections shown elsewhere on the drawings.

Where concrete with varying thickness is shown on the drawings, vary thickness of concrete uniformly between dimensions and elevations shown.

Pipe sleeves and embedded piping 12 inches in diameter and larger are shown on the outline drawings. Smaller diameter pipe sleeves or piping may or may not be shown.

Not all embedded items are shown on the outline drawings.

Before placing concrete on grade, make sure that all buried material below the concrete is in place.

For details of method of building forms for successive lifts, see 40-D-5246.

For details of construction and contraction joints, see 40-D-5247.

For details of construction joint keys, see 40-D-5249.

All horizontal construction joints shall be thoroughly cleaned and roughened to a full amplitude of approximately 1/4 inch.

Backfill shall not be placed against the walls until concrete has attained a compressive strength of 4,500 pounds per square inch.

Conduit shall not be larger in outside diameter than one-third of the overall thickness of the slab, wall, or beam in which they are embedded.

Conduit shall not be spaced closer than 3 diameters or widths on center.

Conduit shall be located within the middle third of the cross sectional depth of the member, slab, or wall in which they are embedded. For conduit larger than 3-inches in diameter, locate as close as possible to the middle third of the cross sectional depth of the member.

PUMPING PLANT	DATUM (FT)
PUMPING PLANT NO. 4	EL. 5867.50
PUMPING PLANT NO. 7	EL. 6215.00

NOTES:
1. All elevations are based on NAVD88 vertical datum.
2. The datum elevation(s) identified in the table correspond to the El. 0.0 elevation identified on the drawing. All elevations reported on the drawings are relative to the El. 0.0 elevation unless noted otherwise.

0 4' 8' 16'
Scale: 1/8" = 1'-0"

NOTES

1. For Structural Design Data and Loads, see (60399) and (60400).
2. Pumping Plant No. 4 control point coordinates, see (60403).
3. Pumping Plant No. 7 control point coordinates, see (60406).
4. For Drawing Index, see (60396) and (60397).
5. For floor drain locations, see (60489).
6. For reinforcement design, see (60418).
7. For typical control joint detail, see (60418).
8. For typical expansion joint detail, see (60417).
9. Suspend keyed construction joint detail when the identified keyed construction joint crosses formed trench sections. Provide a regular construction joint in these areas.

RECLAMATION
Managing Water in the West

ALWAYS THINK SAFETY

U.S. DEPARTMENT OF THE INTERIOR
BUREAU OF RECLAMATION
NAVAJO-GALLUP WATER SUPPLY PROJECT
NEW MEXICO

SAN JUAN LATERAL
PUMPING PLANT NOS. 4 AND 7

Brandon Jackson
DESIGNED
Brandon Jackson
DRAWN
Sara Putnam
CHECKED
TECH. APPR. Kevin O'Shea, P.E.
APPROVED Alfred I. Bernstein
Peer Reviewer - Plant Structures Group

DENVER, CO 2020-01-24

PUMPING PLANT CONCRETE OUTLINE

PLAN

1695-D-60414

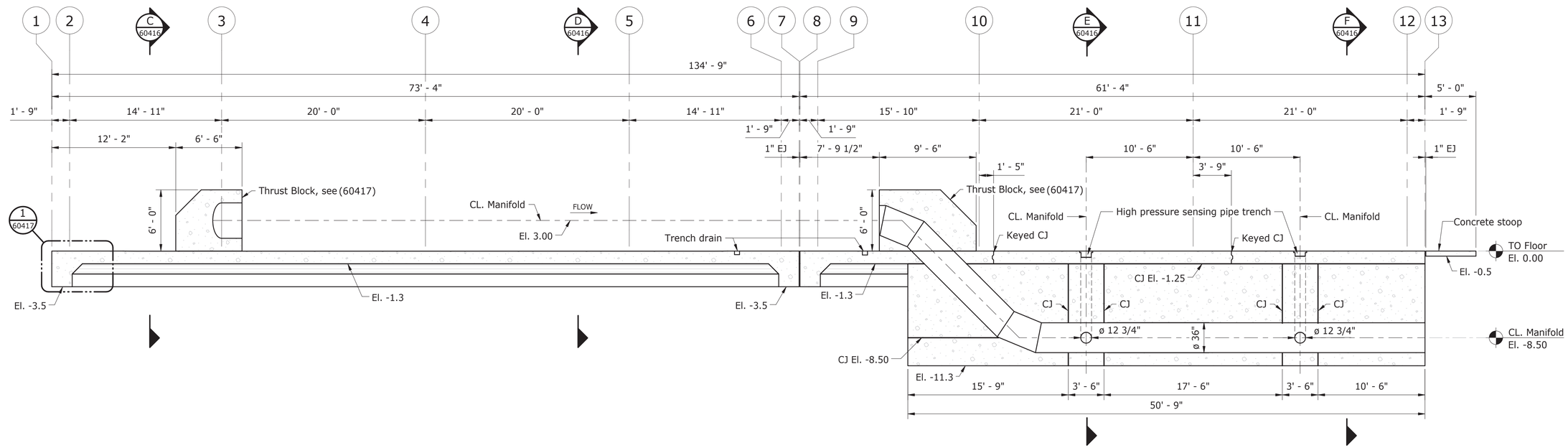

A 60414 SECTION
Scale: 3/16" = 1'-0"

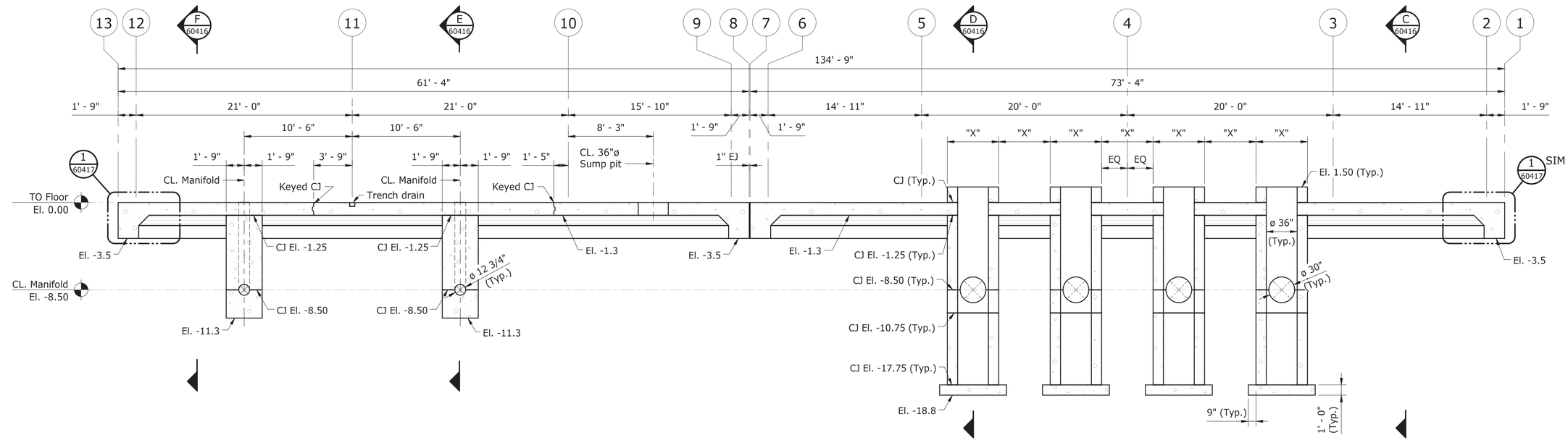

B 60414 SECTION
Scale: 3/16" = 1'-0"

PUMPING PLANT	DATUM (FT)
PUMPING PLANT NO. 4	EL. 5867.50
PUMPING PLANT NO. 7	EL. 6215.00

NOTES:
1. All elevations are based on NAVD88 vertical datum.
2. The datum elevation(s) identified in the table correspond to the El. 0.0 elevation identified on the drawing. All elevations reported on the drawings are relative to the El. 0.0 elevation unless noted otherwise.

NOTES

1. For concrete outline general notes, see (60414).
2. For reinforcement design, see (60419).
3. Government determines "X" dimension after reciept of approved Contractor-furnished drawings and data for the electrical and mechanical equipment.

0 5' 10'
Scale: 3/16" = 1'-0"

RECLAMATION
Managing Water in the West

ALWAYS THINK **SAFETY**

U.S. DEPARTMENT OF THE INTERIOR
BUREAU OF RECLAMATION
NAVAJO-GALLUP WATER SUPPLY PROJECT
NEW MEXICO

SAN JUAN LATERAL
PUMPING PLANT NOS. 4 AND 7

Brandon Jackson
DESIGNED
Brandon Jackson
DRAWN
Sara Putnam
CHECKED
K. O'Shea P.E.
TECH. APPR. Kevin O'Shea, P.E.
APPROVED Alfred I. Bernstein
Peer Reviewer - Plant Structures Group

DENVER, CO 2020-01-24

PUMPING PLANT CONCRETE OUTLINE

SECTIONS

1695-D-60415

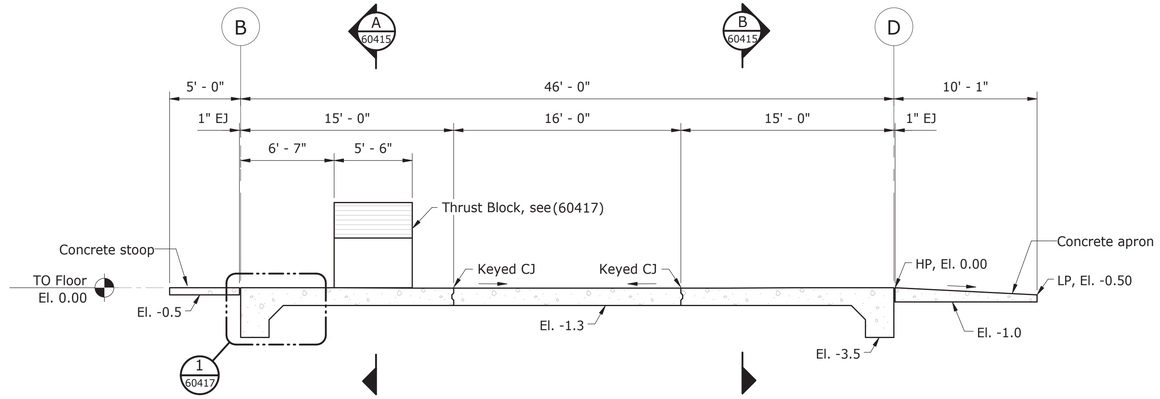

C 60414 SECTION
Scale: 3/16" = 1'-0"

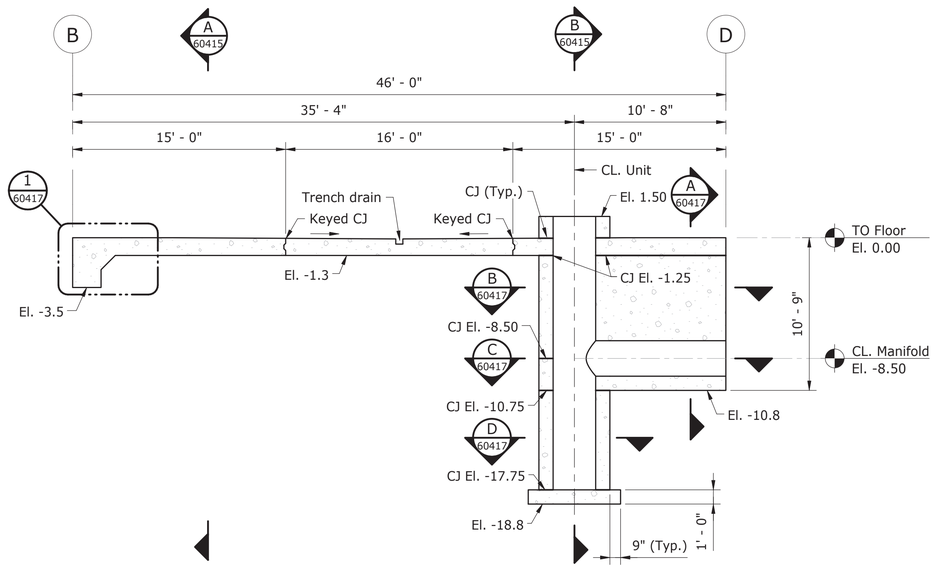

D 60414 SECTION
Scale: 3/16" = 1'-0"

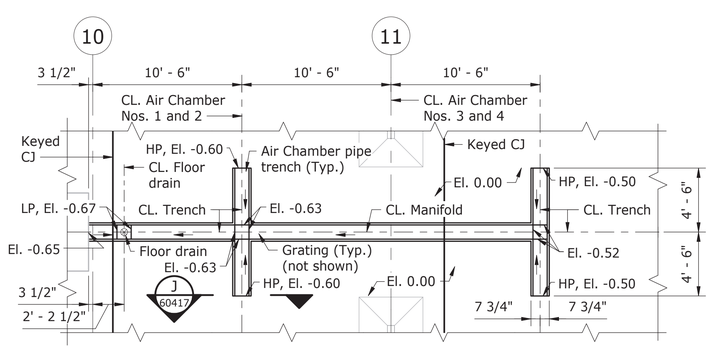

1 60414 DETAIL - HIGH PRESSURE SENSING LINE TRENCH
Scale: 3/16" = 1'-0"

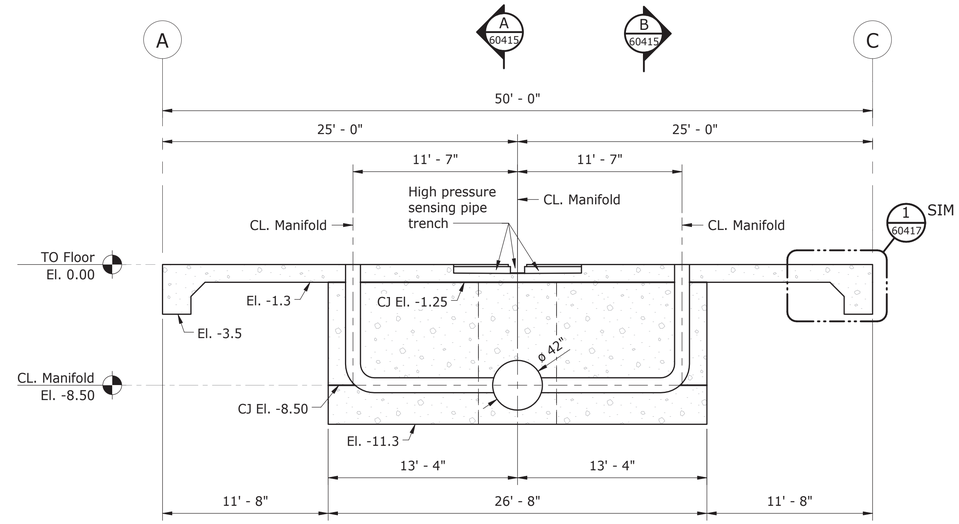

E 60414 SECTION
Scale: 3/16" = 1'-0"

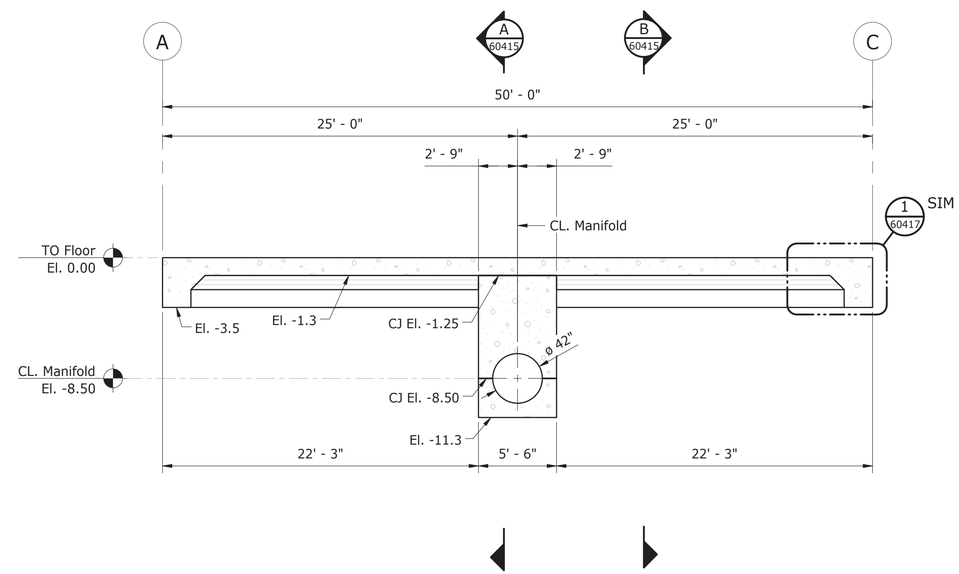

F 60414 SECTION
Scale: 3/16" = 1'-0"

PUMPING PLANT	DATUM (FT)
PUMPING PLANT NO. 4	EL. 5867.50
PUMPING PLANT NO. 7	EL. 6215.00

NOTES:
1. All elevations are based on NAVD88 vertical datum.
2. The datum elevation(s) identified in the table correspond to the El. 0.0 elevation identified on the drawing. All elevations reported on the drawings are relative to the El. 0.0 elevation unless noted otherwise.

0 5' 10'
Scale: 3/16" = 1'-0"

NOTES

1. For concrete outline general notes, see (60414).
2. For reinforcement design, see (60420)

RECLAMATION
Managing Water in the West

ALWAYS THINK **SAFETY**

U.S. DEPARTMENT OF THE INTERIOR
BUREAU OF RECLAMATION

NAVAJO-GALLUP WATER SUPPLY PROJECT
NEW MEXICO

SAN JUAN LATERAL
PUMPING PLANT NOS. 4 AND 7

Brandon Jackson
DESIGNED
Brandon Jackson
DRAWN
Sara Putnam
CHECKED
TECH. APPR. Kevin O'Shea, P.E.
APPROVED Alfred I. Bernstein
Peer Reviewer - Plant Structures Group

DENVER, CO 2020-01-24

PUMPING PLANT CONCRETE OUTLINE

SECTIONS

1695-D-60416

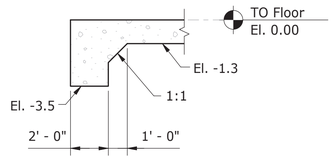

1 (60415) DETAIL - THICKENED EDGE
Scale: 1/4" = 1'-0"

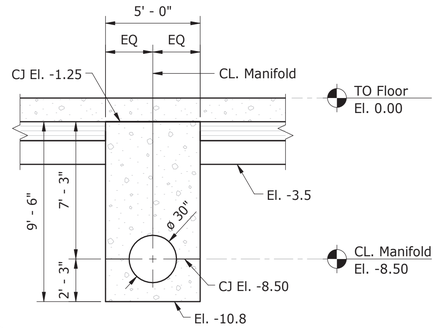

A (60416) SECTION
Scale: 1/4" = 1'-0"

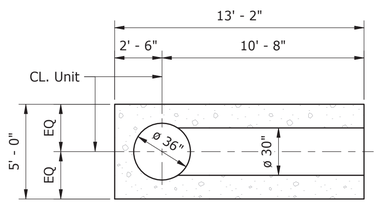

C (60416) SECTION
Scale: 1/4" = 1'-0"

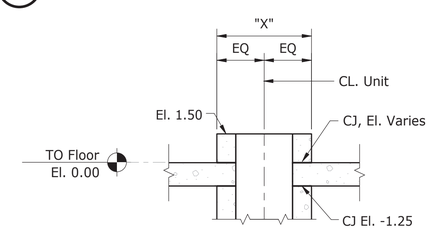

E (60417) SECTION
Scale: 1/4" = 1'-0"

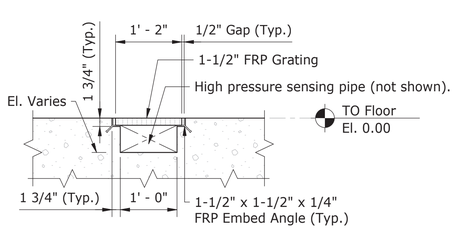

J (60416) SECTION
Scale: 3/4" = 1'-0"

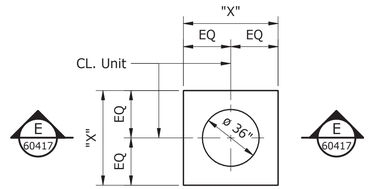

2 (60414) DETAIL - PUMP PEDESTAL
Scale: 1/4" = 1'-0"

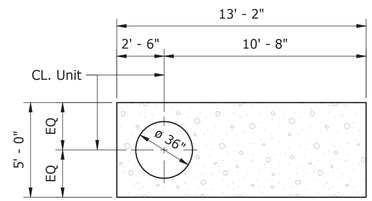

B (60416) SECTION
Scale: 1/4" = 1'-0"

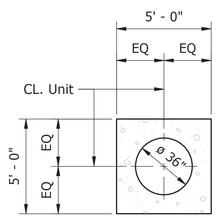

D (60416) SECTION
Scale: 1/4" = 1'-0"

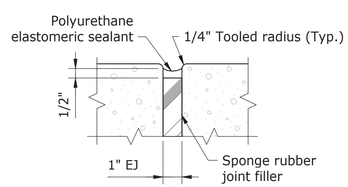

TYPICAL EXPANSION JOINT
(NTS)

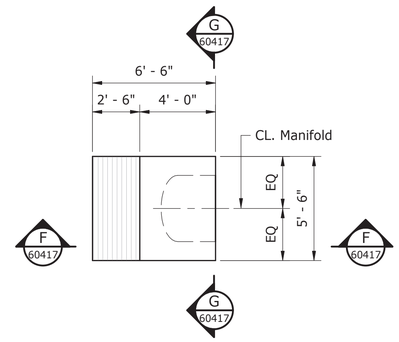

3 (60414) DETAIL - UPSTREAM THRUST BLOCK
Scale: 1/4" = 1'-0"

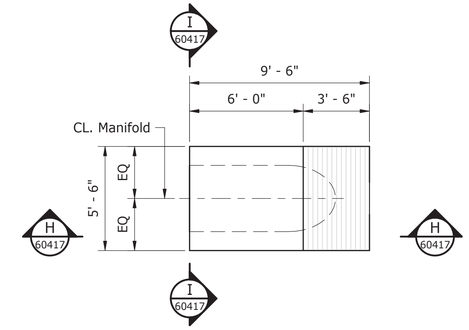

4 (60414) DETAIL - DOWNSTREAM THRUST BLOCK
Scale: 1/4" = 1'-0"

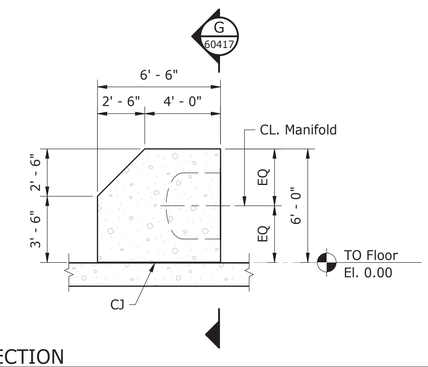

F (60417) SECTION
Scale: 1/4" = 1'-0"

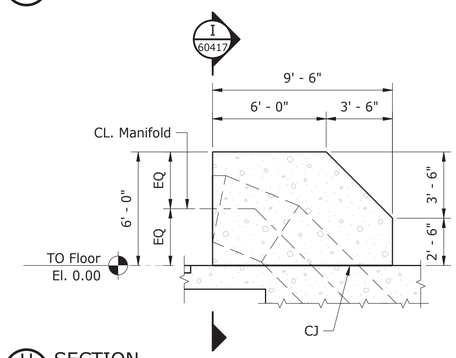

H (60417) SECTION
Scale: 1/4" = 1'-0"

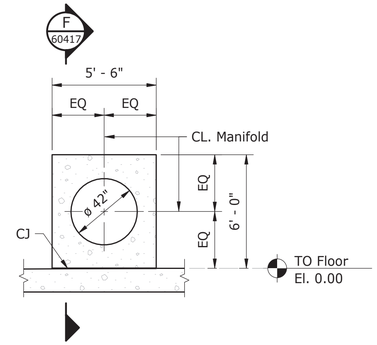

G (60417) SECTION
Scale: 1/4" = 1'-0"

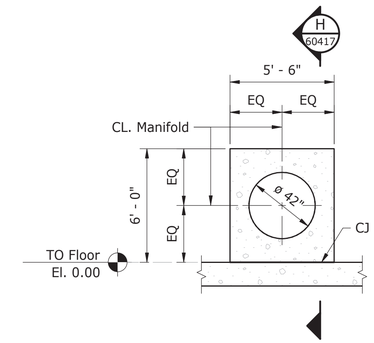

I (60417) SECTION
Scale: 1/4" = 1'-0"

PUMPING PLANT	DATUM (FT)
PUMPING PLANT NO. 4	EL. 5867.50
PUMPING PLANT NO. 7	EL. 6215.00

NOTES:
1. All elevations are based on NAVD88 vertical datum.
2. The datum elevation(s) identified in the table correspond to the El. 0.0 elevation identified on the drawing. All elevations reported on the drawings are relative to the El. 0.0 elevation unless noted otherwise.

NOTES

1. For concrete outline general notes, see (60414).
2. For reinforcement design, see (60421)
3. Government determines "X" dimension after reciept of Contractor-furnished drawings and data for the electrical and mechanical equipment.

0 2' 4' 8'
Scale: 1/4" = 1'-0"

0 1' 2' 3'
Scale: 3/4" = 1'-0"

RECLAMATION
Managing Water in the West

ALWAYS THINK **SAFETY**

U.S. DEPARTMENT OF THE INTERIOR
BUREAU OF RECLAMATION
NAVAJO-GALLUP WATER SUPPLY PROJECT
NEW MEXICO

SAN JUAN LATERAL
PUMPING PLANT NOS. 4 AND 7

Brandon Jackson
DESIGNED
Brandon Jackson
DRAWN
Sara Putnam
CHECKED
TECH. APPR. Kevin O'Shea, P.E.
APPROVED Alfred I. Bernstein
Peer Reviewer - Plant Structures Group

DENVER, CO 2020-01-24

PUMPING PLANT CONCRETE OUTLINE

SECTIONS AND DETAILS

1695-D-60417

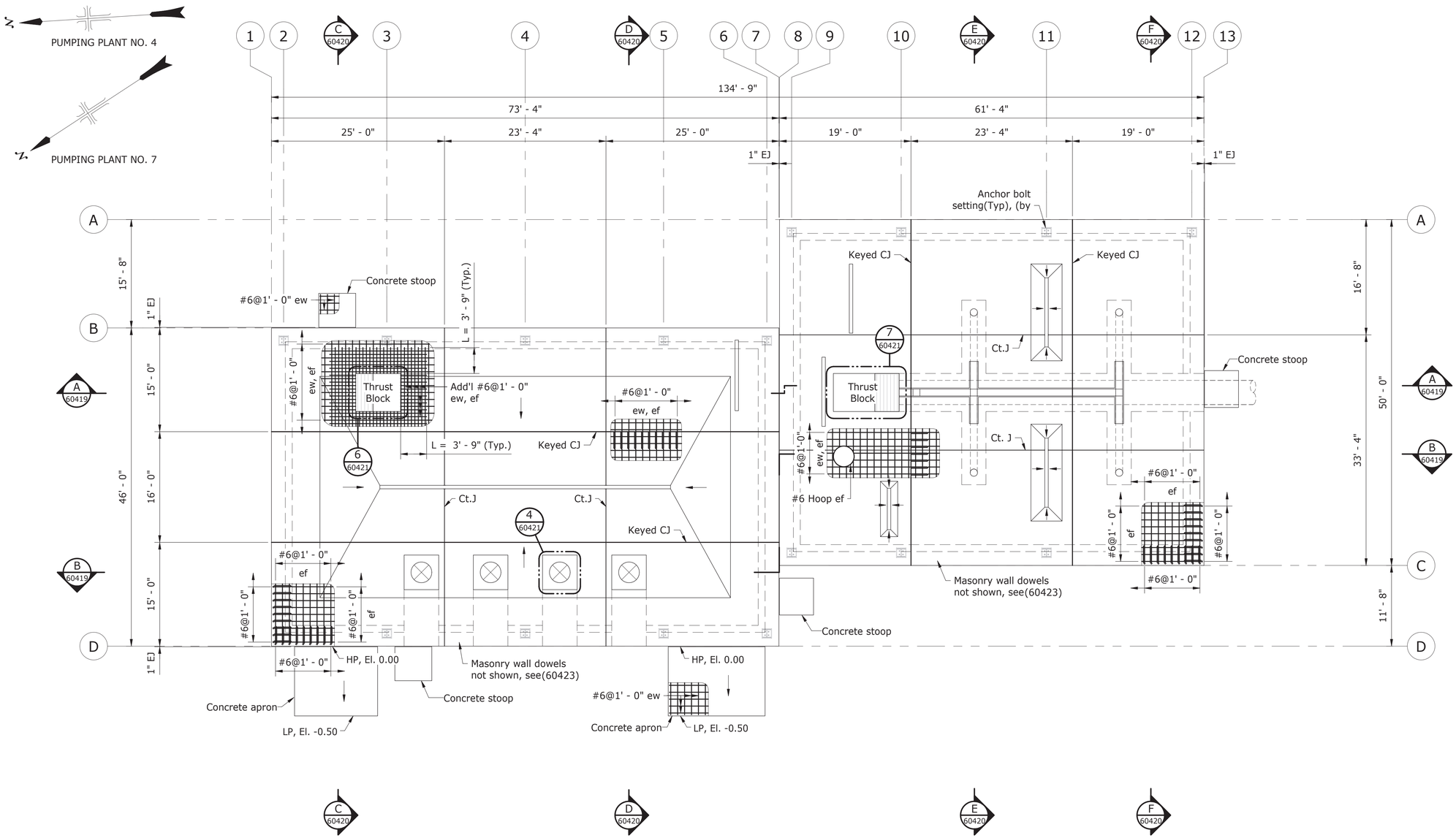

PLAN

Scale: 1/8" = 1'-0"

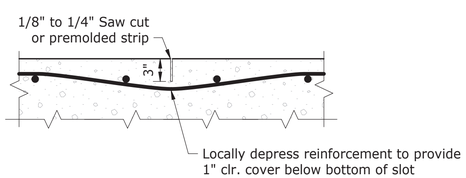

TYPICAL CONTROL JOINT

(NTS)

REINFORCEMENT DESIGN GENERAL NOTES

For notes to designers and detailers, and for additional reinforcement general notes, see 40-D-60003.

For minimum requirements for detailing reinforcement, see 40-D-60004.

Structural design for cast-in-place structural concrete is based on concrete with a compressive strength of 4,500 pounds per square inch at 28 days with a minimum yield strength of 60,000 pounds per square inch.

"L" denotes length of reinforcement.

"L_s" denotes lap splice length, see 40-D-60004.

For add'l reinforcement around openings, see 40-D-60004.

Reinforcement not shown is similar to that shown elsewhere on the drawing for similar details.

Splices in reinforcement at construction joints may be shifted to agree with sequence of construction

PUMPING PLANT	DATUM (FT)
PUMPING PLANT NO. 4	EL. 5867.50
PUMPING PLANT NO. 7	EL. 6215.00

NOTES:
1. All elevations are based on NAVD88 vertical datum.
2. The datum elevation(s) identified in the table correspond to the El. 0.0 elevation identified on the drawing. All elevations reported on the drawings are relative to the El. 0.0 elevation unless noted otherwise.

0 4' 8' 16'
Scale: 1/8" = 1'-0"

NOTES

1. For Structural Design Data and Loads, see (60399) and (60400).
2. Pumping Plant No. 4 control point coordinates, see (60403).
3. Pumping Plant No. 7 control point coordinates, see (60406).
4. For Drawing Index, see (60396) and (60397).
5. For concrete outline, see (60414).

RECLAMATION
Managing Water in the West

ALWAYS THINK SAFETY

U.S. DEPARTMENT OF THE INTERIOR
BUREAU OF RECLAMATION
NAVAJO-GALLUP WATER SUPPLY PROJECT
NEW MEXICO

SAN JUAN LATERAL
PUMPING PLANT NOS. 4 AND 7

Brandon Jackson
DESIGNED
Brandon Jackson
DRAWN
Sara Putnam
CHECKED
TECH. APPR. Kevin O'Shea, P.E.
APPROVED Alfred I. Bernstein
Peer Reviewer - Plant Structures Group

DENVER, CO 2020-01-24

PUMPING PLANT REINFORCEMENT DESIGN

PLAN

1695-D-60418

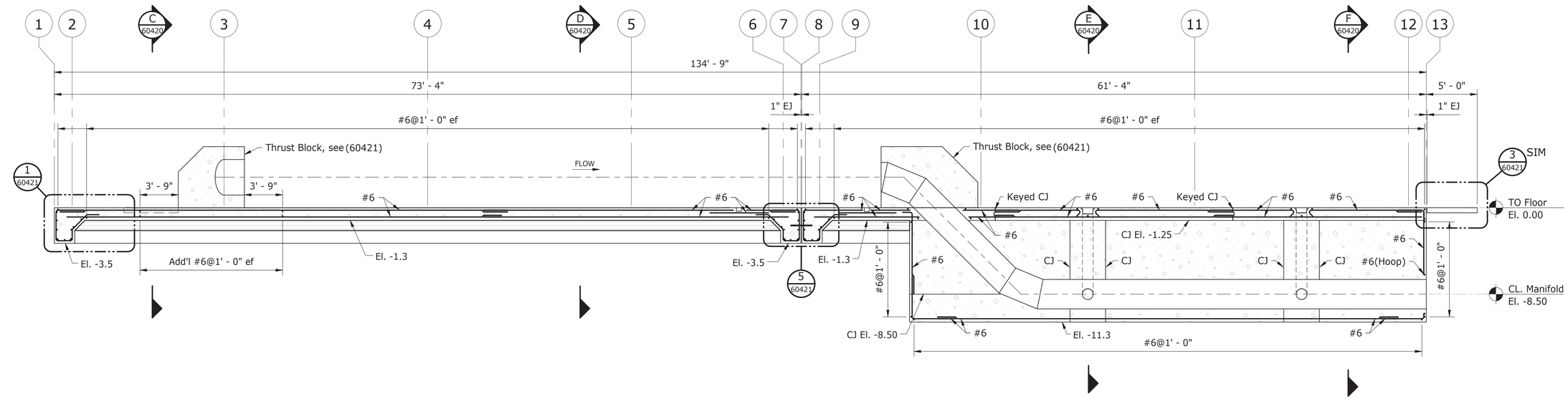

A 60418 SECTION
Scale: 3/16" = 1'-0"

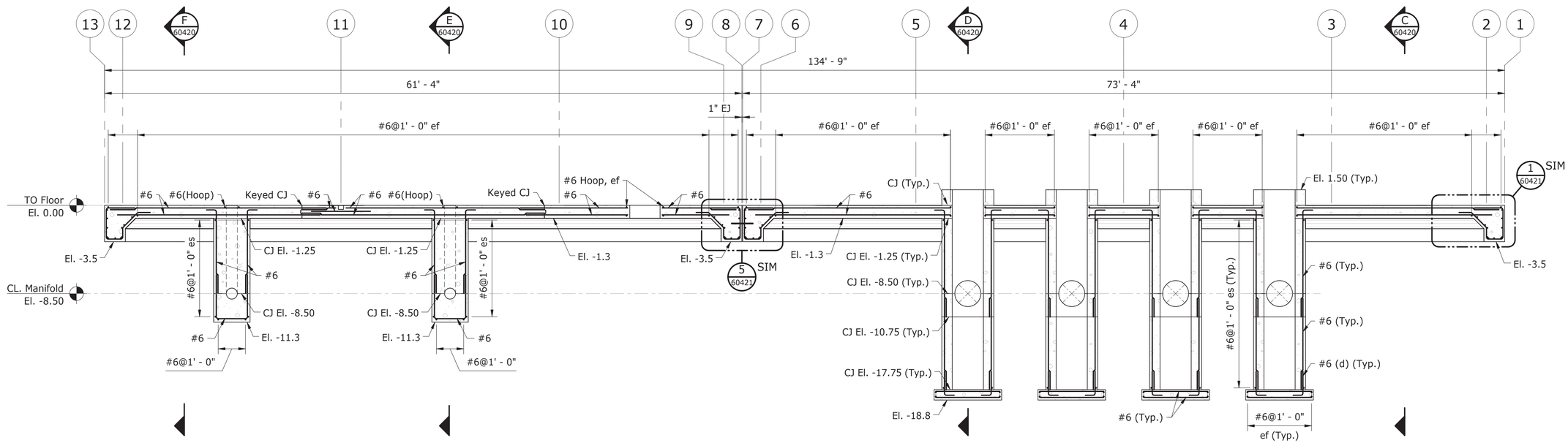

B 60418 SECTION
Scale: 3/16" = 1'-0"

PUMPING PLANT	DATUM (FT)
PUMPING PLANT NO. 4	EL. 5867.50
PUMPING PLANT NO. 7	EL. 6215.00

NOTES:
1. All elevations are based on NAVD88 vertical datum.
2. The datum elevation(s) identified in the table correspond to the El. 0.0 elevation identified on the drawing. All elevations reported on the drawings are relative to the El. 0.0 elevation unless noted otherwise.

NOTES

1. For reinforcement design general notes, see (60418).
2. For concrete outline, see (60415).

0 5' 10'
Scale: 3/16" = 1'-0"

RECLAMATION
Managing Water in the West

ALWAYS THINK **SAFETY**

U.S. DEPARTMENT OF THE INTERIOR
BUREAU OF RECLAMATION
NAVAJO-GALLUP WATER SUPPLY PROJECT
NEW MEXICO

SAN JUAN LATERAL
PUMPING PLANT NOS. 4 AND 7

Brandon Jackson
DESIGNED
Brandon Jackson
DRAWN
Sara Putnam
CHECKED
TECH. APPR. Kevin O'Shea, P.E.
APPROVED Alfred I. Bernstein
Peer Reviewer - Plant Structures Group

DENVER, CO 2020-01-24

PUMPING PLANT REINFORCEMENT DESIGN

SECTIONS

1695-D-60419

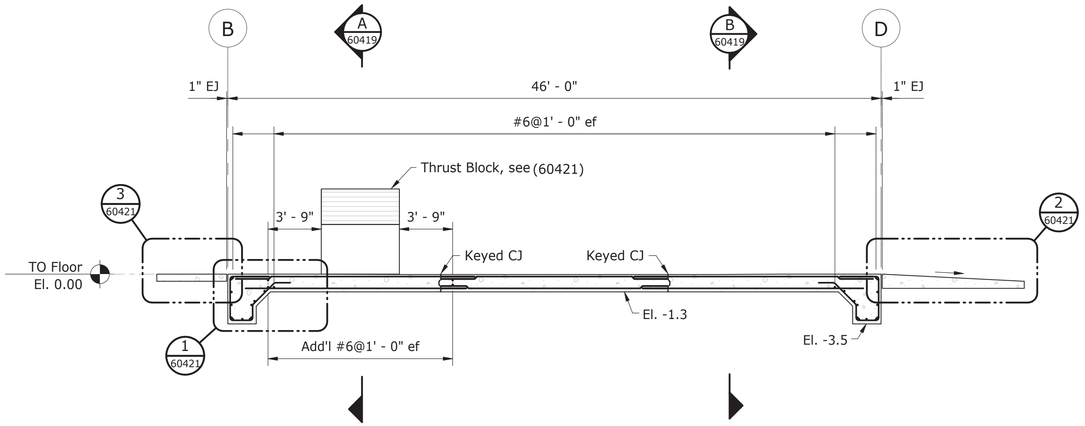

C 60418 SECTION
Scale: 3/16" = 1'-0"

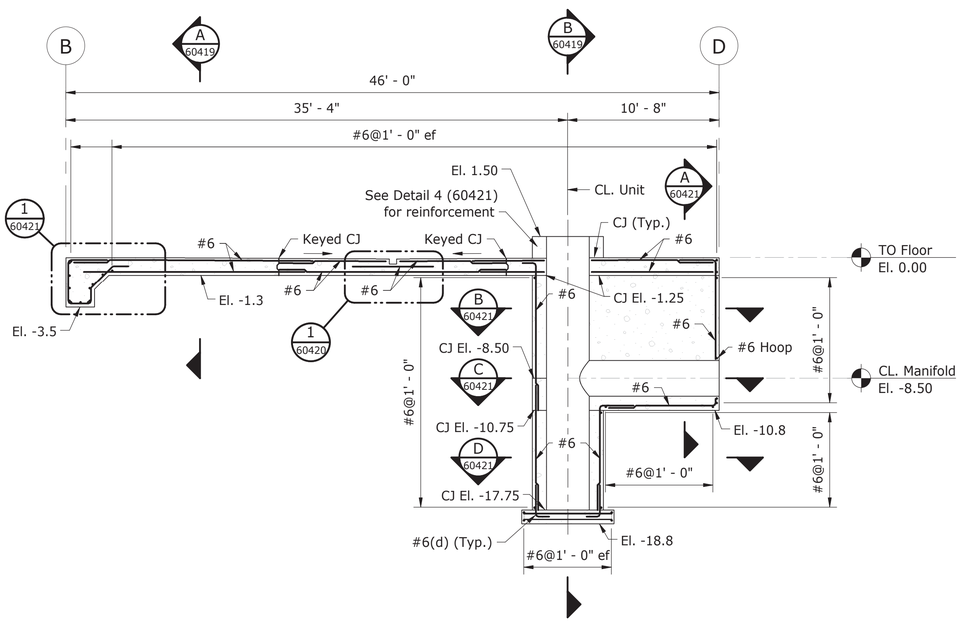

D 60418 SECTION
Scale: 3/16" = 1'-0"

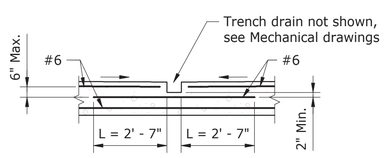

1 DETAIL
Scale: 3/8" = 1'-0"

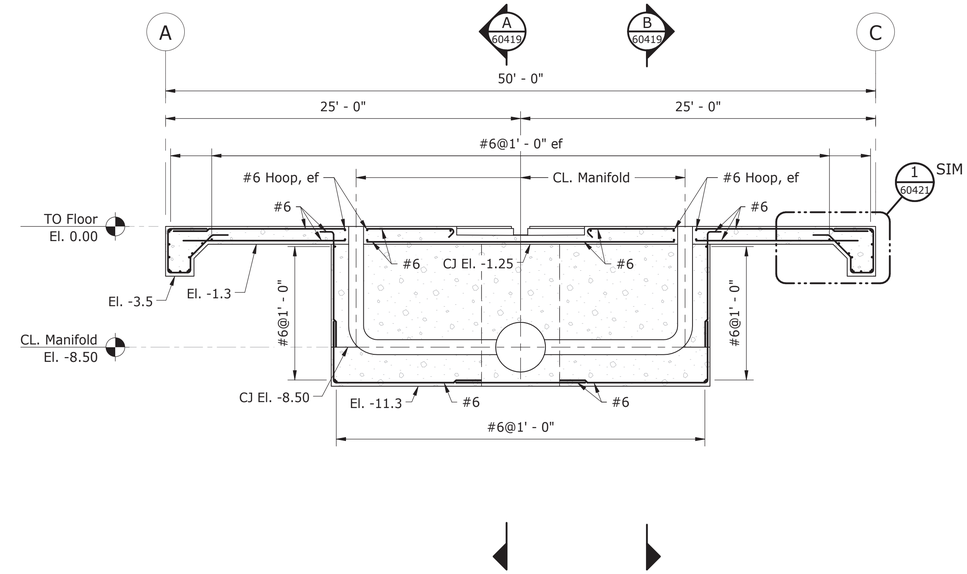

E 60418 SECTION
Scale: 3/16" = 1'-0"

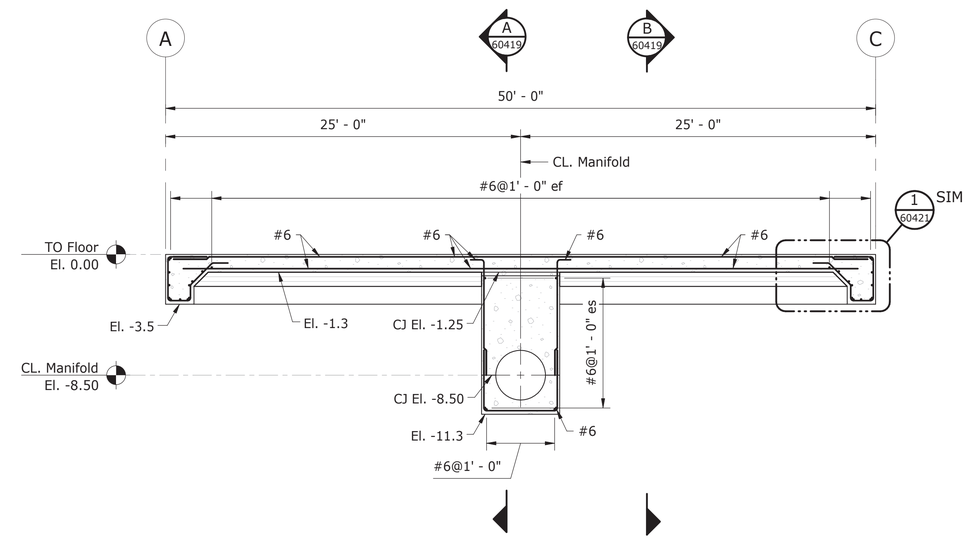

F 60418 SECTION
Scale: 3/16" = 1'-0"

PUMPING PLANT	DATUM (FT)
PUMPING PLANT NO. 4	EL. 5867.50
PUMPING PLANT NO. 7	EL. 6215.00

NOTES:
1. All elevations are based on NAVD88 vertical datum.
2. The datum elevation(s) identified in the table correspond to the El. 0.0 elevation identified on the drawing. All elevations reported on the drawings are relative to the El. 0.0 elevation unless noted otherwise.

NOTES

1. For reinforcement design general notes, see (60418).
2. For concrete outline, see (60416).

0 5' 10' Scale: 3/16" = 1'-0"
0 2' 4' 6' Scale: 3/8" = 1'-0"

RECLAMATION
Managing Water in the West

ALWAYS THINK SAFETY

U.S. DEPARTMENT OF THE INTERIOR
BUREAU OF RECLAMATION
NAVAJO-GALLUP WATER SUPPLY PROJECT
NEW MEXICO

SAN JUAN LATERAL
PUMPING PLANT NOS. 4 AND 7

DESIGNED	Brandon Jackson
DRAWN	Brandon Jackson
CHECKED	Sara Putnam
TECH. APPR.	Kevin O'Shea, P.E.
APPROVED Peer Reviewer - Plant Structures Group	Alfred I. Bernstein
DENVER, CO	2020-01-24

PUMPING PLANT REINFORCEMENT DESIGN

SECTIONS

1695-D-60420

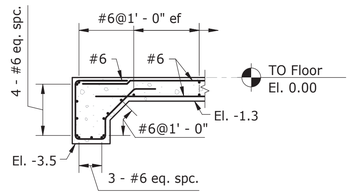

1 60419 DETAIL - THICKENED EDGE
Scale: 1/4" = 1'-0"

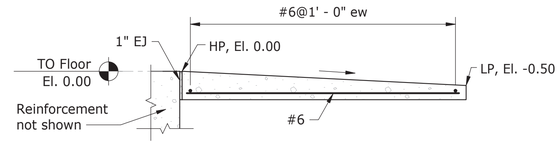

2 60420 DETAIL - CONCRETE APRON
Scale: 3/8" = 1'-0"

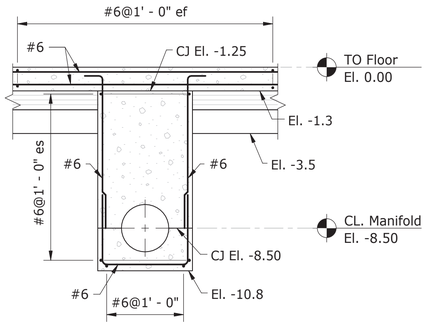

A 60420 SECTION
Scale: 1/4" = 1'-0"

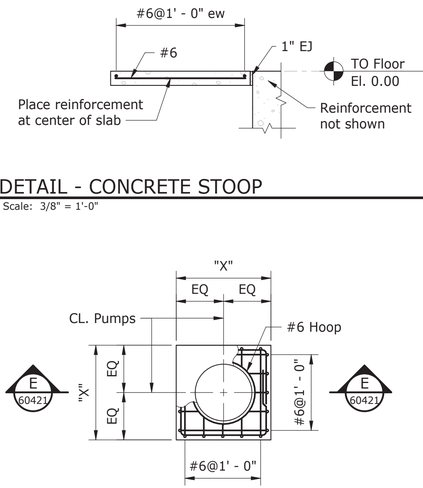

3 60419 DETAIL - CONCRETE STOOP
Scale: 3/8" = 1'-0"

4 60418 DETAIL - PUMP PEDESTAL
Scale: 1/4" = 1'-0"

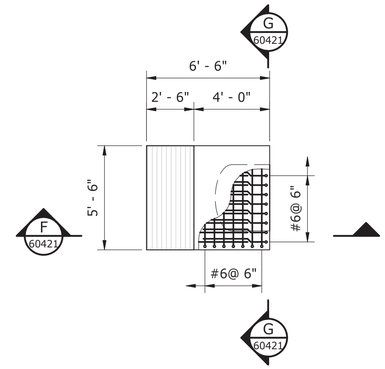

6 60418 DETAIL - UPSTREAM THRUST BLOCK
Scale: 1/4" = 1'-0"

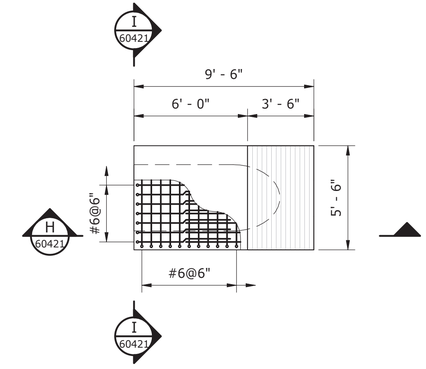

7 60418 DETAIL - DOWNSTREAM THRUST BLOCK
Scale: 1/4" = 1'-0"

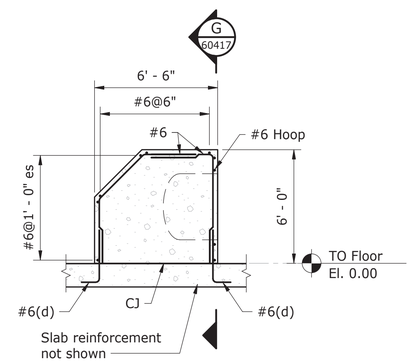

F 60421 SECTION
Scale: 1/4" = 1'-0"

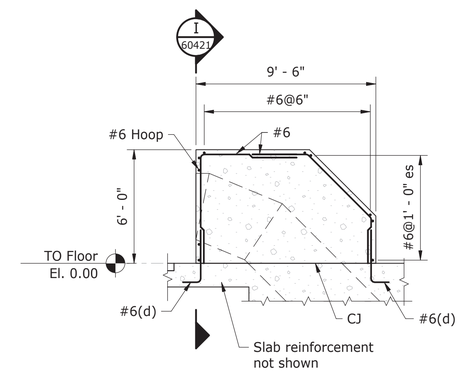

H 60421 SECTION
Scale: 1/4" = 1'-0"

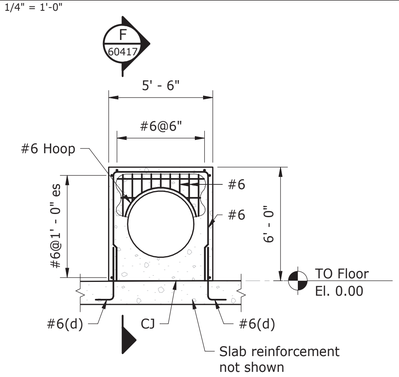

G 60421 SECTION
Scale: 1/4" = 1'-0"

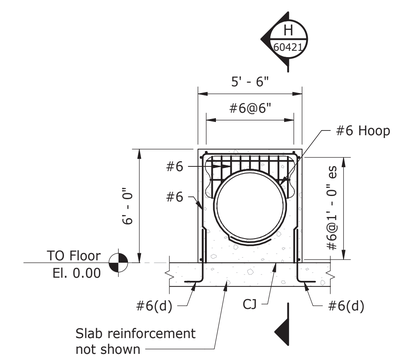

I 60421 SECTION
Scale: 1/4" = 1'-0"

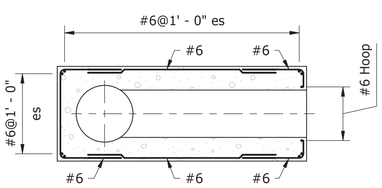

B 60420 SECTION
Scale: 1/4" = 1'-0"

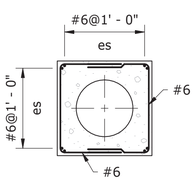

C 60420 SECTION
Scale: 1/4" = 1'-0"

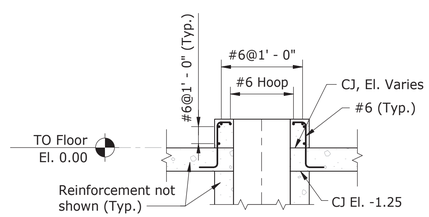

E 60421 SECTION
Scale: 1/4" = 1'-0"

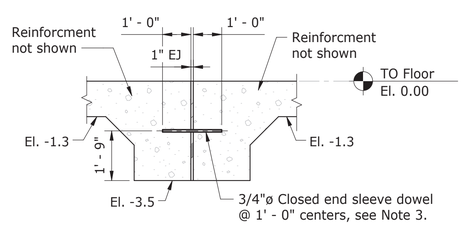

5 60419 DETAIL
Scale: 3/8" = 1'-0"

PUMPING PLANT	DATUM (FT)
PUMPING PLANT NO. 4	EL. 5867.50
PUMPING PLANT NO. 7	EL. 6215.00

NOTES:
1. All elevations are based on NAVD88 vertical datum.
2. The datum elevation(s) identified in the table correspond to the El. 0.0 elevation identified on the drawing. All elevations reported on the drawings are relative to the El. 0.0 elevation unless noted otherwise.

NOTES

1. For reinforcement design general notes, see (60418).
2. For concrete outline, see (60417).
3. Speed dowel system, see Specifications.
4. Government determines "X" dimension after reciept of approved Contractor-furnished drawings and data for the electrical and mechanical equipment.

0 2' 4' 6'
Scale: 3/8" = 1'-0"

0 2' 4' 8'
Scale: 1/4" = 1'-0"

RECLAMATION
Managing Water in the West

ALWAYS THINK **SAFETY**

U.S. DEPARTMENT OF THE INTERIOR
BUREAU OF RECLAMATION

NAVAJO-GALLUP WATER SUPPLY PROJECT
NEW MEXICO

SAN JUAN LATERAL
PUMPING PLANT NOS. 4 AND 7

Brandon Jackson
DESIGNED
Brandon Jackson
DRAWN
Sara Putnam
CHECKED
TECH. APPR. Kevin O'Shea, P.E.
APPROVED Alfred I. Bernstein
Peer Reviewer - Plant Structures Group

DENVER, CO 2020-01-24

PUMPING PLANT REINFORCEMENT DESIGN

SECTIONS AND DETAILS

1695-D-60421

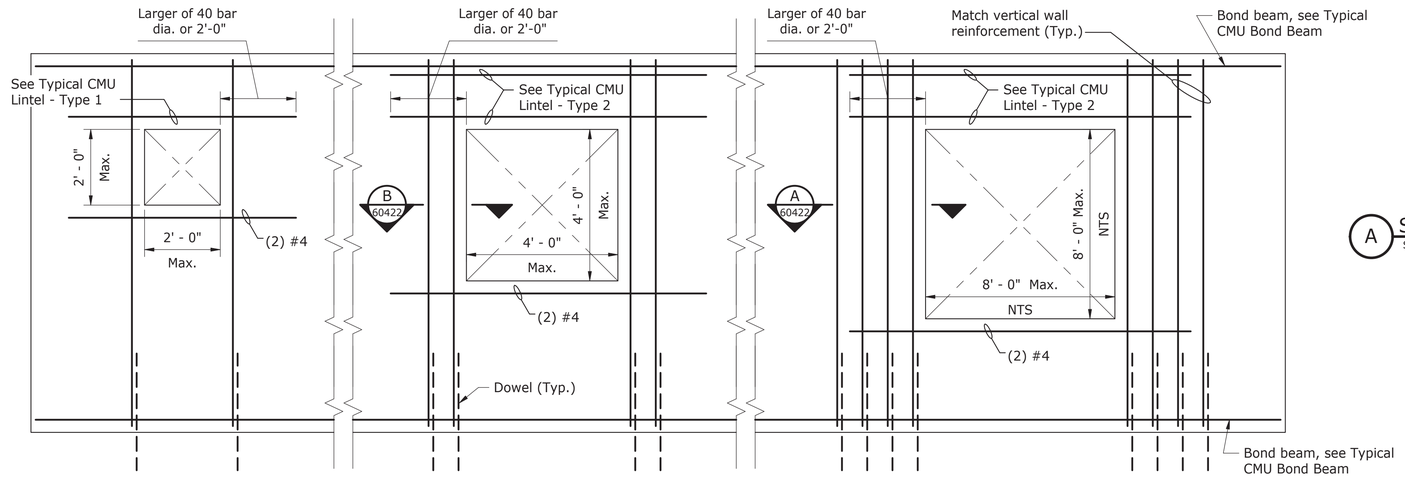

CASE 1: Applies to (1) all openings in non-structural partitions over 100 sq. in. (2) any opening 2'-0" or less in each direction but over 100 sq. in. in structural or exterior walls.

CASE 2: Applies to structural and exterior walls when opening exceeds 2'-0" but not more than 4'-0" in either direction.

CASE 3: Applies to structural and exterior walls when opening exceeds 4'-0" in either direction, but not more than 8'-0".

TYPICAL CMU WALL ELEVATION

Scale: 1/2" = 1'-0"

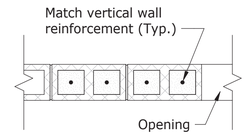

A SECTION
Scale: 3/4" = 1'-0"

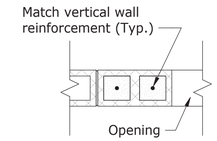

B SECTION
Scale: 3/4" = 1'-0"

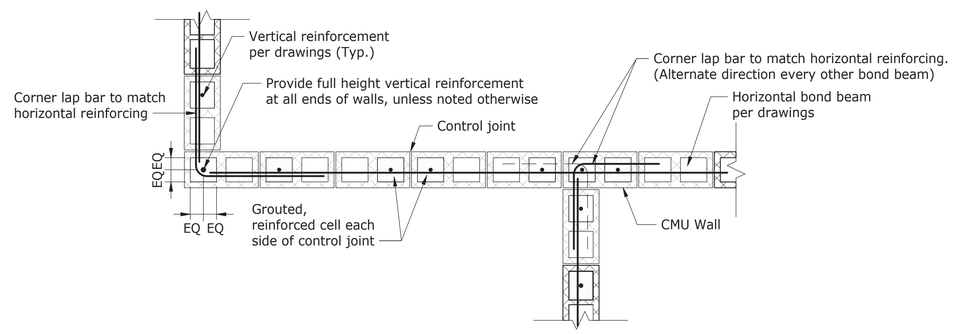

TYPICAL CMU WALL DETAILS

Scale: 3/4" = 1'-0"

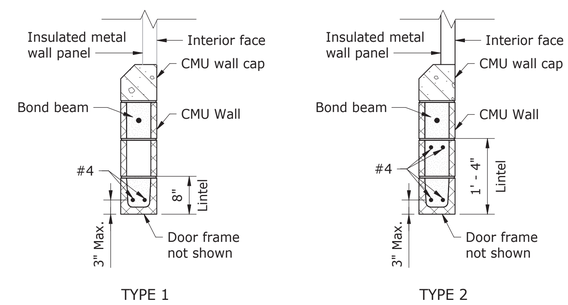

TYPICAL CMU LINTEL

Scale: 3/4" = 1'-0"

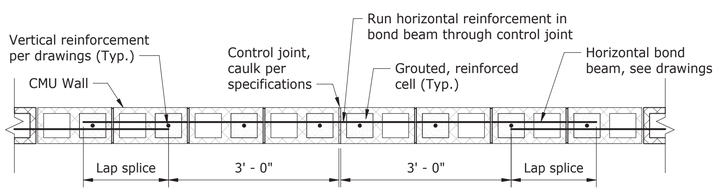

TYPICAL CMU BOND BEAM AND BOND BEAM CONTROL JOINT

Scale: 3/4" = 1'-0"

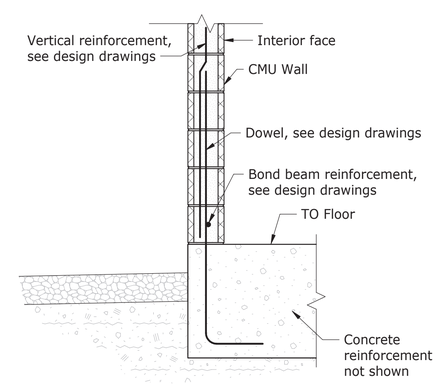

TYPICAL CMU WALL SECTION

Scale: 3/4" = 1'-0"

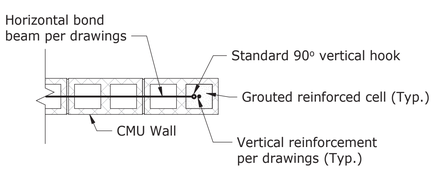

TYPICAL CMU END WALL DETAIL

Scale: 3/4" = 1'-0"

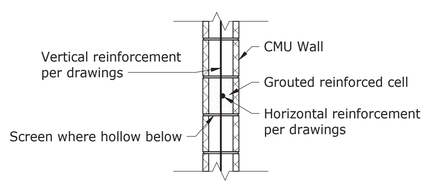

TYPICAL CMU BOND BEAM

Scale: 3/4" = 1'-0"

MASONRY DESIGN GENERAL NOTES

Notes apply to masonry shown on structural drawings and shall be the minimum requirements for masonry shown on architectural drawings.

CMU denotes Concrete Masonry Unit, see specifications.

Concrete Masonry:

Compressive strength of masonry:	f'_m = 1,500-psi
Grout strength at 28 days:	f'_g = 2,000-psi
Mortar:	Type N

Special Inspections and Testing of masonry construction shall be conducted in accordance with the 2015 International Building Code, Chapter 17. See drawings (60401) and (60402).

Provide light weight load-bearing "hollow" concrete masonry units for general use. Provide normal weight and/or "solid" units where specifically indicated. Non-load bearing units unacceptable. Obtain each type of exposed material from one manufacturer for entire project.

Provide necessary concrete masonry units shapes and sizes, bond beam units, lintel units, and corner units as required to satisfy conditions indicated on the drawings. Include half-size units where required.

Not all penetrations through concrete masonry walls have been shown. Details shown are typical unless noted otherwise.

Dimensions of concrete masonry units are nominal block dimensions.

Thoroughly roughen and clean concrete surfaces on which masonry units are to be placed.

Coordinate block outs, reveals, holes, openings and built in items with all contract documents and trades.

Grout cells solid at: Reinforcing, bond beams and inserts. Additional cell grouting may be required, see drawings.

Provide bond beams at sill lines, bottom edge of openings (extended 2'-0" past opening), top of walls, roof lines, top of parapets and at 10'-0" o.c. maximum between. Bond beam shall be continuous unless noted otherwise.

Control Joints: Unless noted otherwise, control joint spacing shall be provided at a length to height of wall ratio 1.5:1, and not to exceed 25ft.

Control joints must be a minimum of 2'-0" outboard of opening.

Reinforcing bars splice length, development length, clear cover, standard hooks and minimum bend diameters shall be in accordance with TMS 602-13.

Splice bars using contact lap splices.

Provide standard hooks on bars terminating into a masonry face in walls at openings, heads, jambs, expansion joints, and ends.

Continue vertical reinforcing through construction joints.

Vertical reinforcing bars shall be centered in the concrete masonry unit and shall be held in position top and bottom and in intervals not exceeding 4'-0" using rebar positioners, see specifications.

Provide ladder type horizontal joint reinforcing at 16" o.c., see specifications.

Horizontal joint reinforcing shall be lapped no less than 6" for all splices, including corners and tees where no control joint is used.

Continue reinforcing through control joints and around corners unless noted otherwise.

Number and location of splices to be determined by contractor.

Dowels from concrete to be furnished and placed by concrete contractor.

Provide vertical wall reinforcing at all wall corners; end walls; each side of openings and at each side of control and expansion joints. Match vertical bars in wall.

NOTES

1. For Structural Design Data and Loads, see (60399) and (60400).

0 1' 2' 4'
Scale: 1/2" = 1'-0"

0 1' 2' 3'
Scale: 3/4" = 1'-0"

RECLAMATION
Managing Water in the West

ALWAYS THINK **SAFETY**

U.S. DEPARTMENT OF THE INTERIOR
BUREAU OF RECLAMATION
NAVAJO-GALLUP WATER SUPPLY PROJECT
NEW MEXICO
SAN JUAN LATERAL
PUMPING PLANT NOS. 4 AND 7

DESIGNED	Brandon Jackson
DRAWN	Brandon Jackson
CHECKED	Sara Putnam
TECH. APPR.	Kevin O'Shea, P.E.
APPROVED	Alfred I. Bernstein, Peer Reviewer - Plant Structures Group
DENVER, CO	2020-01-24

MASONRY

GENERAL NOTES AND TYPICAL DETAILS

1695-D-60422

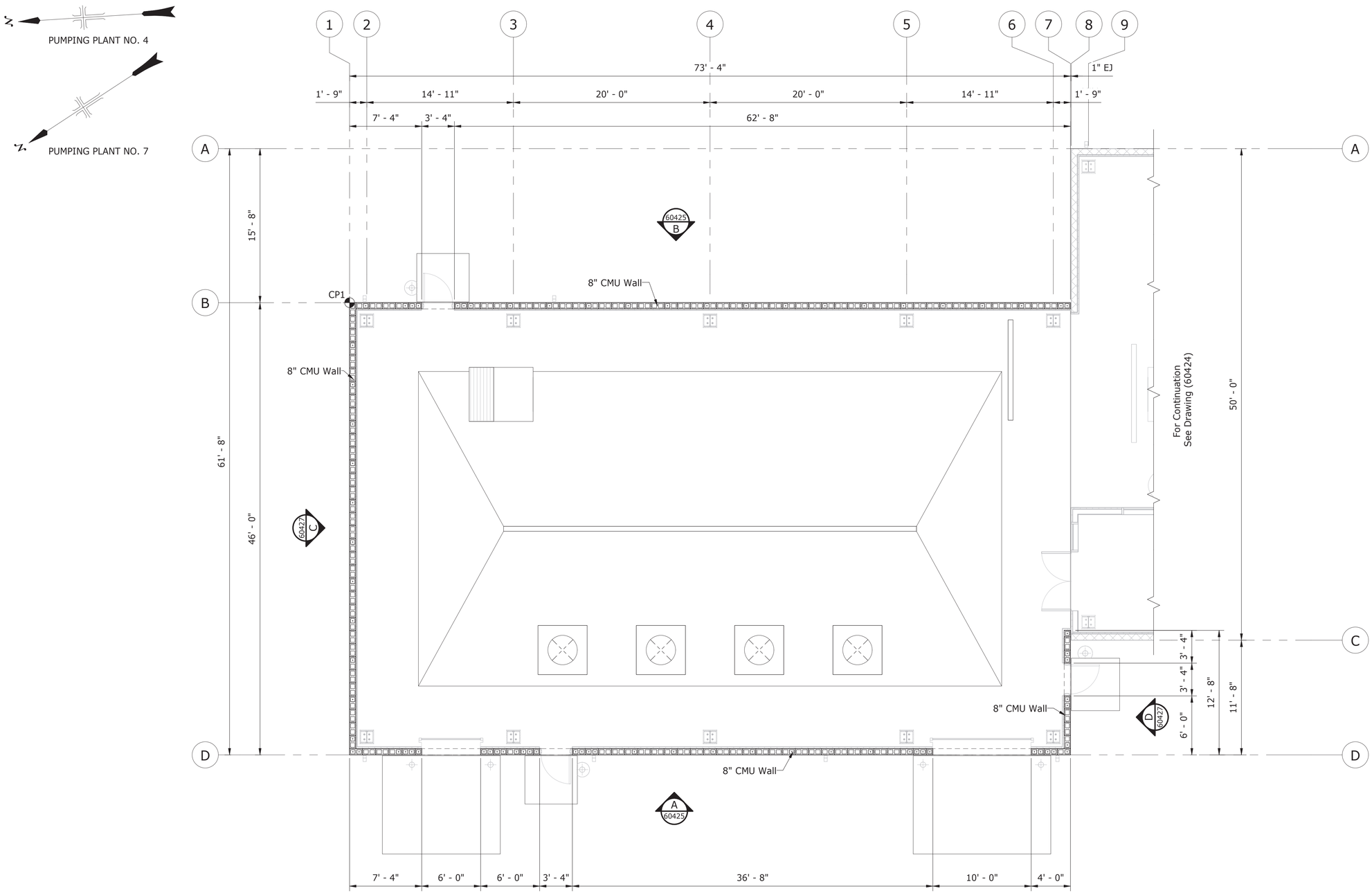

PLAN - PUMPING PLANT

Scale: 3/16" = 1'-0"

PUMPING PLANT	DATUM (FT)
PUMPING PLANT NO. 4	EL. 5867.50
PUMPING PLANT NO. 7	EL. 6215.00

NOTES:
1. All elevations are based on NAVD88 vertical datum.
2. The datum elevation(s) identified in the table correspond to the El. 0.0 elevation identified on the drawing. All elevations reported on the drawings are relative to the El. 0.0 elevation unless noted otherwise.

NOTES

1. For Masonry Design General Notes, see (60422).
2. For Typical Details, see (60422).
3. For Structural Design Data and Loads, see (60399) and (60400).
4. Pumping Plant No. 4 control point coordinates, see (60403).
5. Pumping Plant No. 7 control point coordinates, see (60406).
6. For Drawing Index, see (60396) and (60397).

0 5' 10'
Scale: 3/16" = 1'-0"

RECLAMATION
Managing Water in the West

ALWAYS THINK **SAFETY**

U.S. DEPARTMENT OF THE INTERIOR
BUREAU OF RECLAMATION
NAVAJO-GALLUP WATER SUPPLY PROJECT
NEW MEXICO

SAN JUAN LATERAL
PUMPING PLANT NOS. 4 AND 7

Brandon Jackson
DESIGNED
Brandon Jackson
DRAWN
Sara Putnam
CHECKED
TECH. APPR. Kevin O'Shea, P.E.
APPROVED Alfred I. Bernstein
Peer Reviewer - Plant Structures Group

DENVER, CO 2020-01-24

PUMPING PLANT MASONRY

PLAN

1695-D-60423

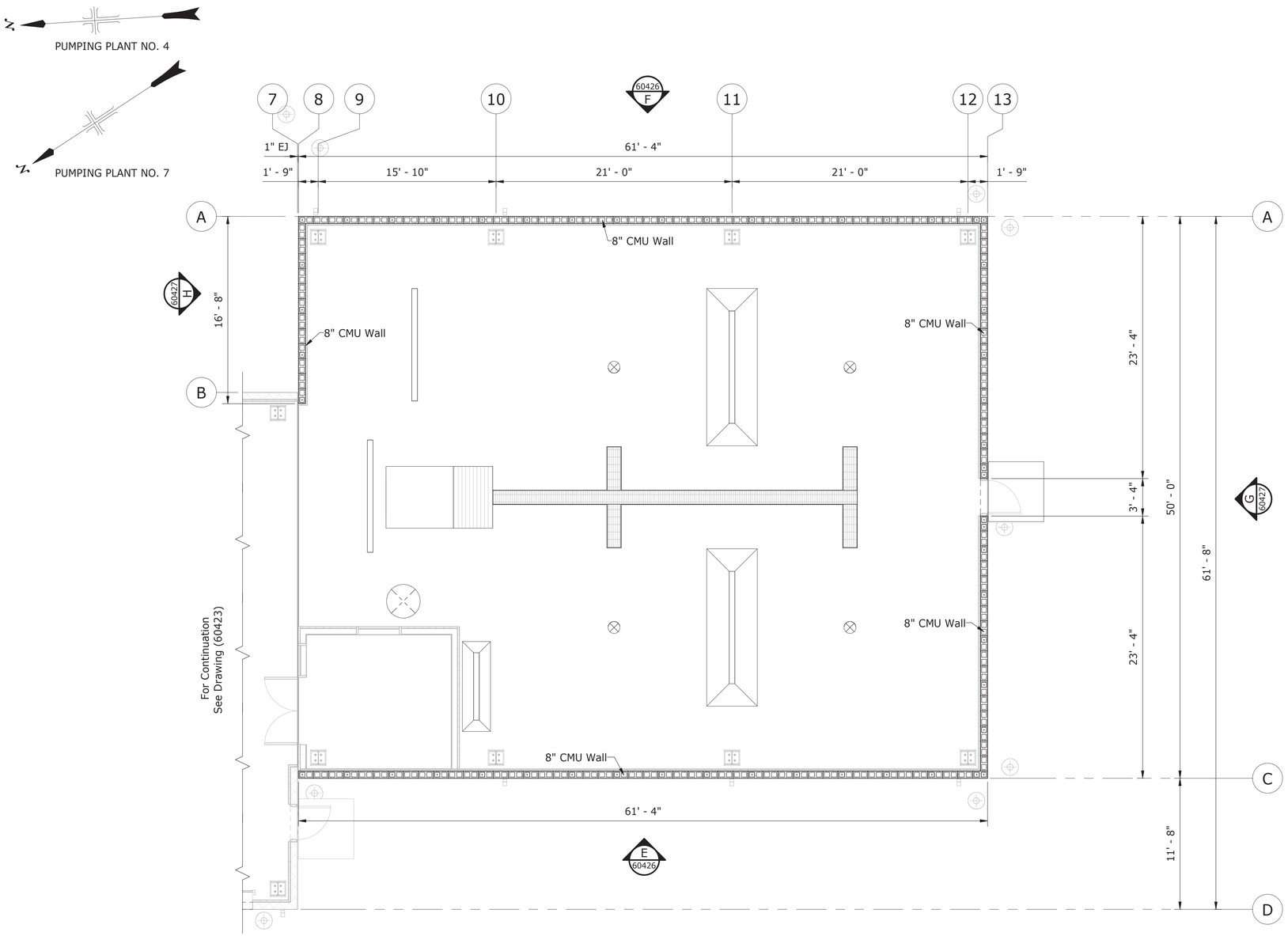

PLAN - AIR CHAMBER

Scale: 3/16" = 1'-0"

PUMPING PLANT	DATUM (FT)
PUMPING PLANT NO. 4	EL. 5867.50
PUMPING PLANT NO. 7	EL. 6215.00

NOTES:
1. All elevations are based on NAVD88 vertical datum.
2. The datum elevation(s) identified in the table correspond to the El. 0.0 elevation identified on the drawing. All elevations reported on the drawings are relative to the El. 0.0 elevation unless noted otherwise.

NOTES

1. For Masonry Design General Notes, see (60422).
2. For Structural Design Data and Loads, see (60399) and (60400).
3. For Typical Details, see (60422).
4. For Drawing Index, see (60396) and (60397).

0 5' 10'
Scale: 3/16" = 1'-0"

RECLAMATION
Managing Water in the West

ALWAYS THINK **SAFETY**

U.S. DEPARTMENT OF THE INTERIOR
BUREAU OF RECLAMATION
NAVAJO-GALLUP WATER SUPPLY PROJECT
NEW MEXICO

SAN JUAN LATERAL
PUMPING PLANT NOS. 4 AND 7

Brandon Jackson
DESIGNED
Brandon Jackson
DRAWN
Sara Putnam
CHECKED
TECH. APPR. Kevin O'Shea, P.E.
APPROVED Alfred I. Bernstein
Peer Reviewer - Plant Structures Group

DENVER, CO 2020-01-24

PUMPING PLANT MASONRY

PLAN

1695-D-60424

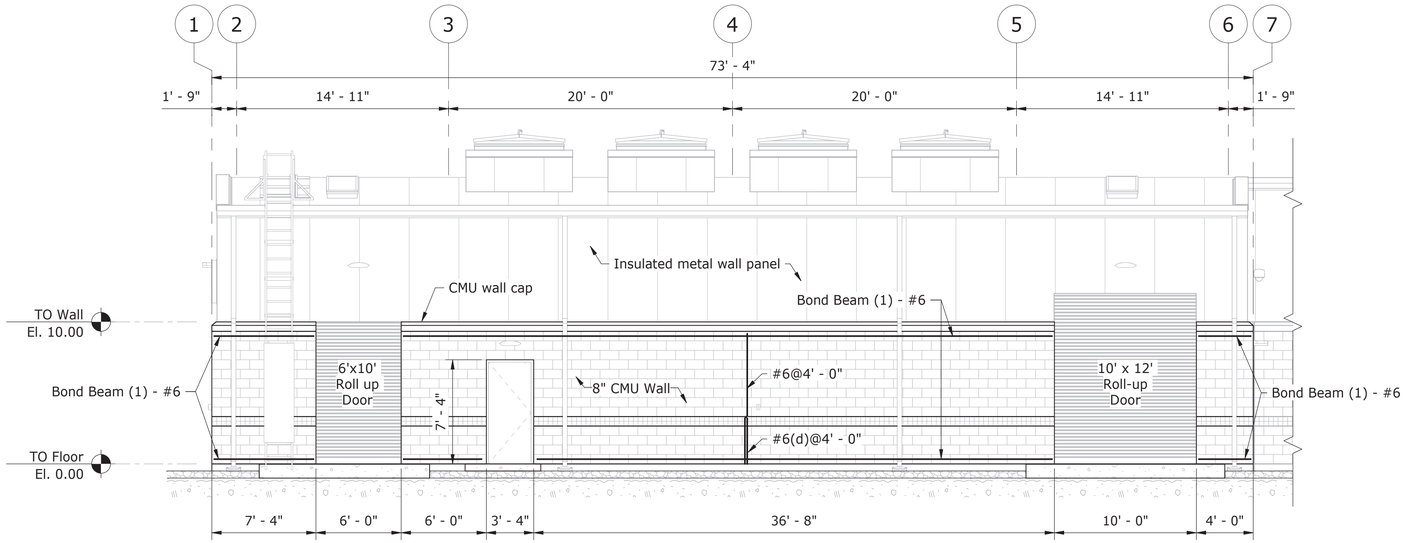

A 60423 ELEVATION - PUMPING PLANT: PUMP ROOM
Scale: 3/16" = 1'-0"

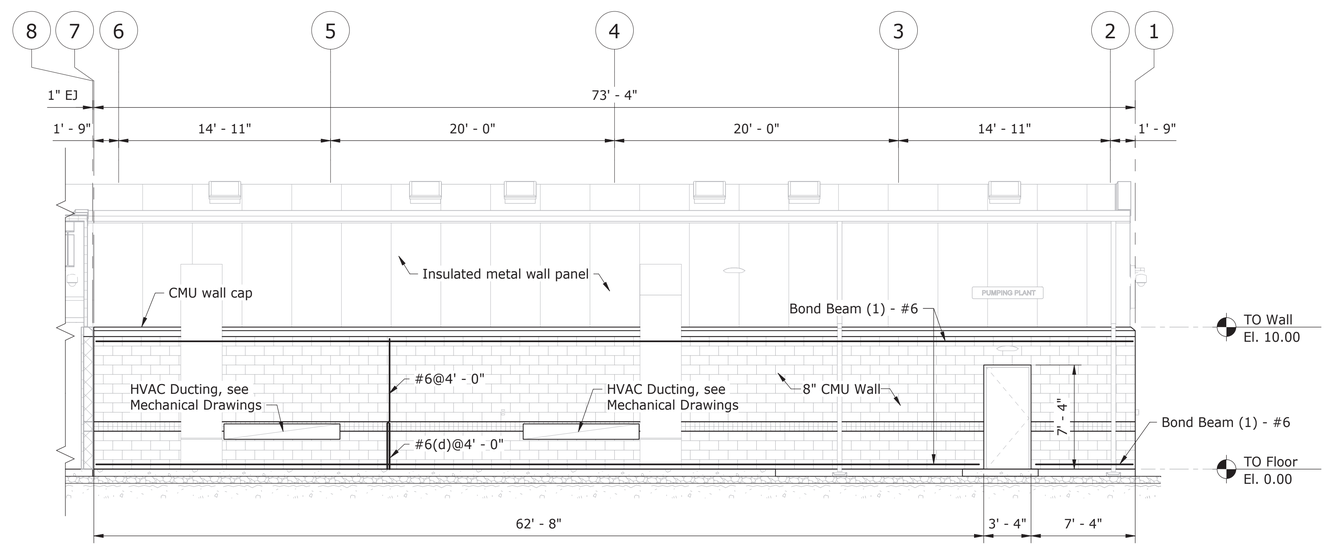

B 60423 ELEVATION - PUMPING PLANT: PUMP ROOM
Scale: 3/16" = 1'-0"

PUMPING PLANT	DATUM (FT)
PUMPING PLANT NO. 4	EL. 5867.50
PUMPING PLANT NO. 7	EL. 6215.00

NOTES:
1. All elevations are based on NAVD88 vertical datum.
2. The datum elevation(s) identified in the table correspond to the El. 0.0 elevation identified on the drawing. All elevations reported on the drawings are relative to the El. 0.0 elevation unless noted otherwise.

NOTES

1. For Masonry Design General Notes, see (60422).
2. For Typical Details, see (60422).

0 5' 10'
Scale: 3/16" = 1'-0"

RECLAMATION
Managing Water in the West

ALWAYS THINK **SAFETY**

U.S. DEPARTMENT OF THE INTERIOR
BUREAU OF RECLAMATION

NAVAJO-GALLUP WATER SUPPLY PROJECT
NEW MEXICO

SAN JUAN LATERAL
PUMPING PLANT NOS. 4 AND 7

Brandon Jackson
DESIGNED
Brandon Jackson
DRAWN
Sara Putnam
CHECKED
TECH. APPR. Kevin O'Shea, P.E.
APPROVED Alfred I. Bernstein
Peer Reviewer - Plant Structures Group

DENVER, CO 2020-01-24

PUMPING PLANT MASONRY

ELEVATIONS

1695-D-60425

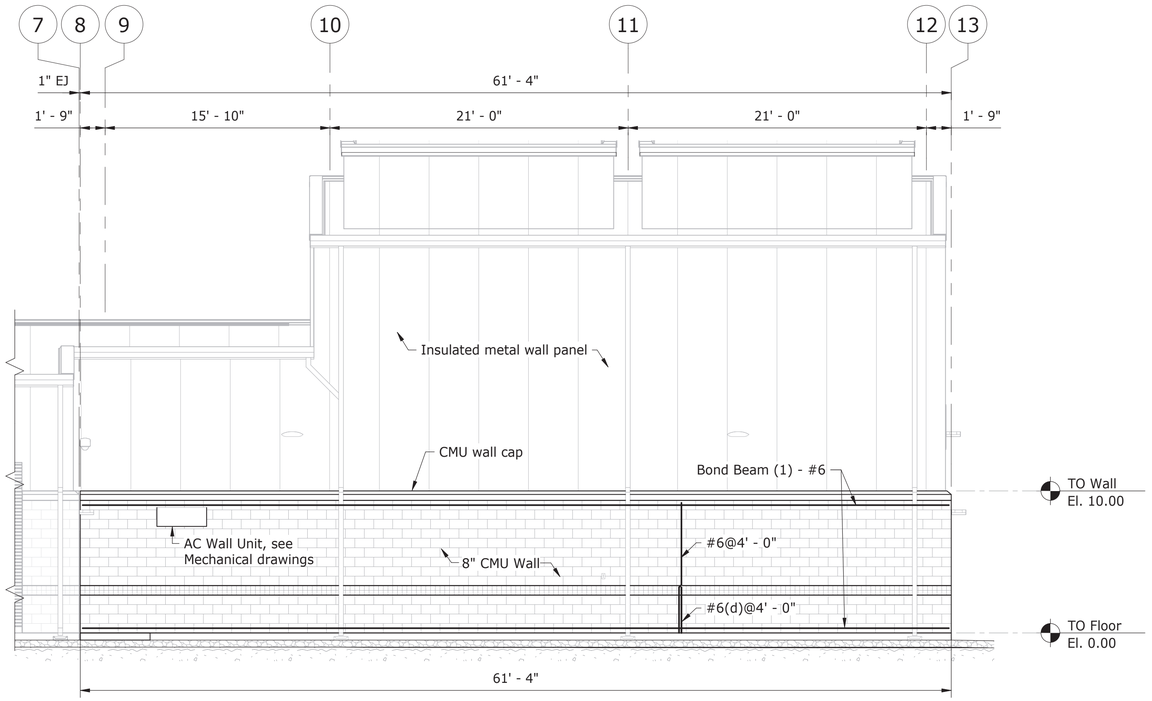

E 60424 ELEVATION - PUMPING PLANT: AIR CHAMBER ROOM

Scale: 3/16" = 1'-0"

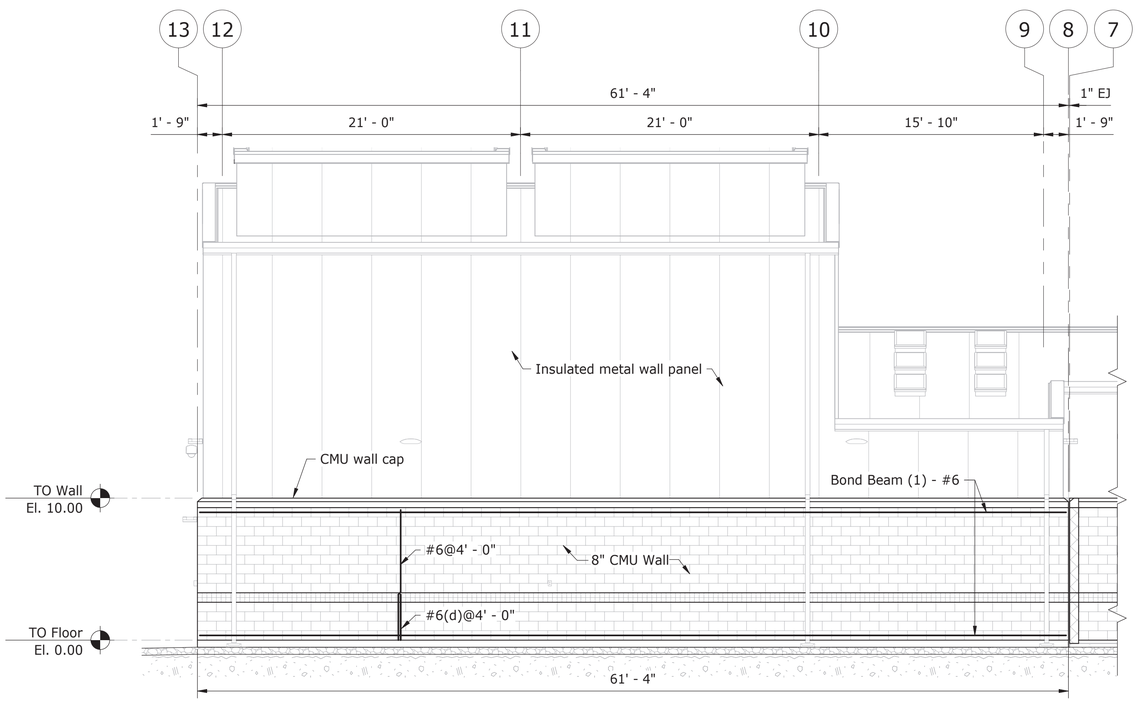

F 60424 ELEVATION - PUMPING PLANT: AIR CHAMBER ROOM

Scale: 3/16" = 1'-0"

PUMPING PLANT	DATUM (FT)
PUMPING PLANT NO. 4	EL. 5867.50
PUMPING PLANT NO. 7	EL. 6215.00

NOTES:
1. All elevations are based on NAVD88 vertical datum.
2. The datum elevation(s) identified in the table correspond to the El. 0.0 elevation identified on the drawing. All elevations reported on the drawings are relative to the El. 0.0 elevation unless noted otherwise.

NOTES

1. For Masonry Design General Notes, see (60422).
2. For Typical Details, see (60422).

0 5' 10'
Scale: 3/16" = 1'-0"

RECLAMATION
Managing Water in the West

ALWAYS THINK SAFETY

U.S. DEPARTMENT OF THE INTERIOR
BUREAU OF RECLAMATION
NAVAJO-GALLUP WATER SUPPLY PROJECT
NEW MEXICO

SAN JUAN LATERAL
PUMPING PLANT NOS. 4 AND 7

Brandon Jackson
DESIGNED
Brandon Jackson
DRAWN
Sara Putnam
CHECKED
TECH. APPR. Kevin O'Shea, P.E.
APPROVED Alfred I. Bernstein
Peer Reviewer - Plant Structures Group

DENVER, CO 2020-01-24

PUMPING PLANT MASONRY

ELEVATIONS

1695-D-60426

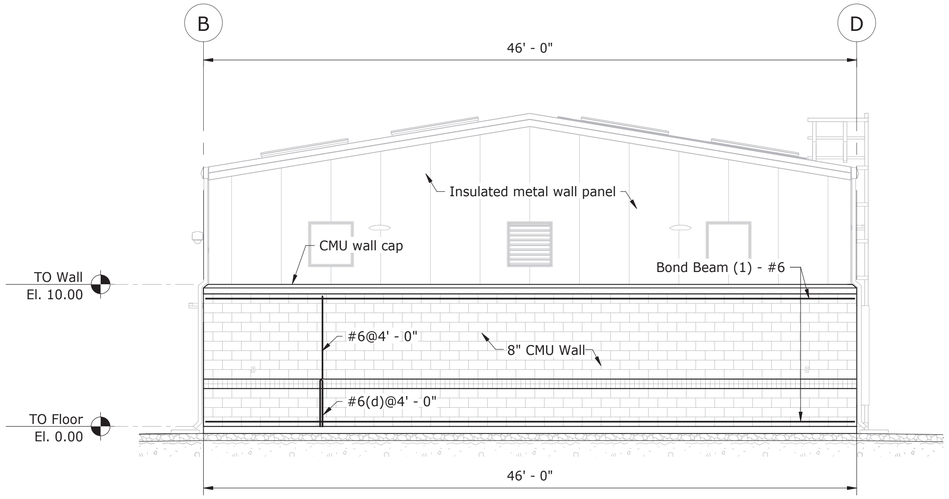

C 60423 ELEVATION - PUMPING PLANT: PUMP ROOM
Scale: 3/16" = 1'-0"

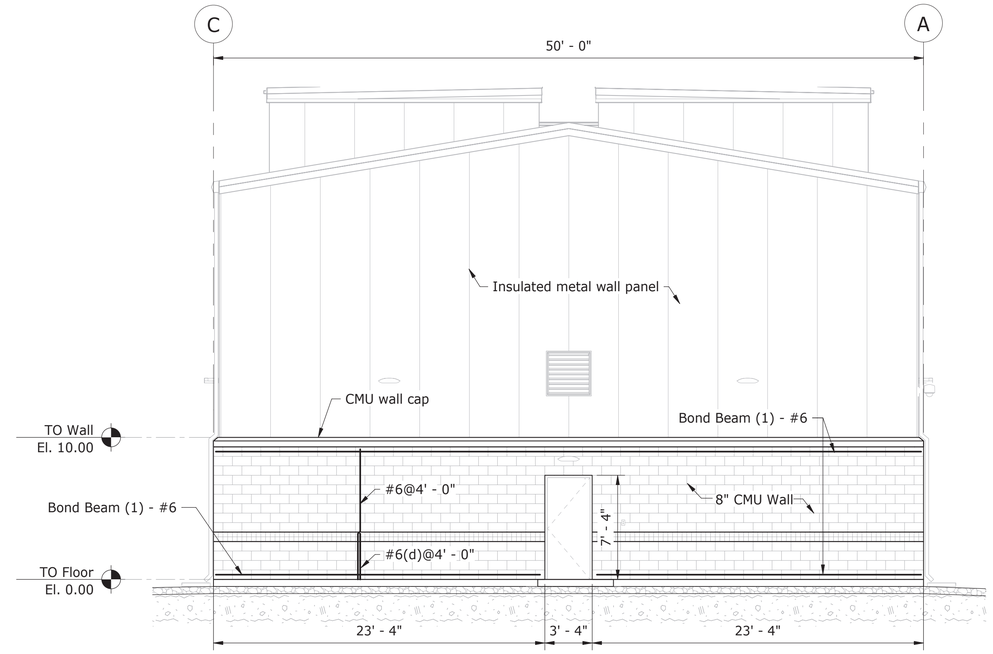

G 60424 ELEVATION - PUMPING PLANT: AIR CHAMBER ROOM
Scale: 3/16" = 1'-0"

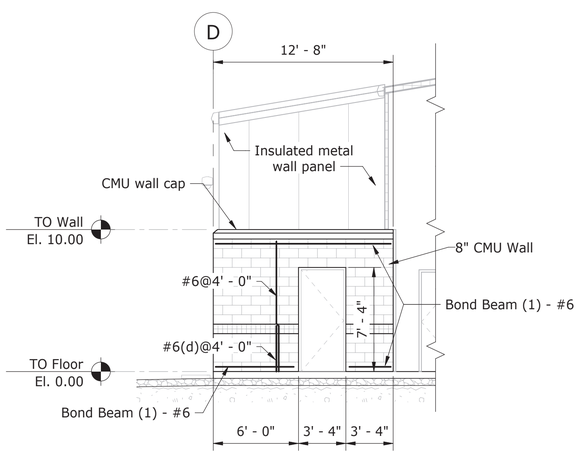

D 60423 ELEVATION - PUMPING PLANT: PUMP ROOM
Scale: 3/16" = 1'-0"

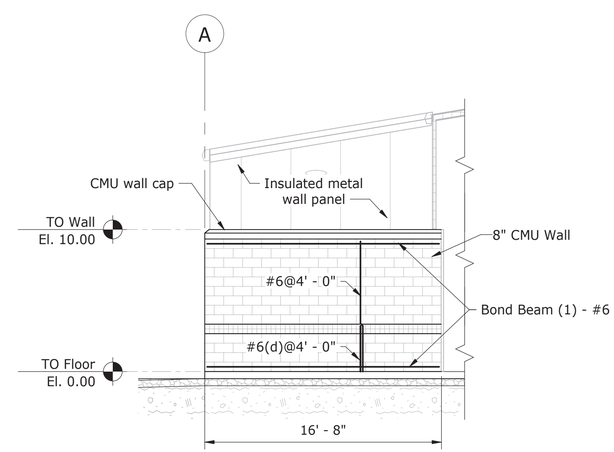

H 60424 ELEVATION - PUMPING PLANT: AIR CHAMBER ROOM
Scale: 3/16" = 1'-0"

PUMPING PLANT	DATUM (FT)
PUMPING PLANT NO. 4	EL. 5867.50
PUMPING PLANT NO. 7	EL. 6215.00

NOTES:
1. All elevations are based on NAVD88 vertical datum.
2. The datum elevation(s) identified in the table correspond to the El. 0.0 elevation identified on the drawing. All elevations reported on the drawings are relative to the El. 0.0 elevation unless noted otherwise.

NOTES

1. For Masonry Design General Notes, see (60422).
2. For Typical Details, see (60422).

0 5' 10'
Scale: 3/16" = 1'-0"

RECLAMATION
Managing Water in the West

ALWAYS THINK **SAFETY**

U.S. DEPARTMENT OF THE INTERIOR
BUREAU OF RECLAMATION
NAVAJO-GALLUP WATER SUPPLY PROJECT
NEW MEXICO
SAN JUAN LATERAL
PUMPING PLANT NOS. 4 AND 7

Brandon Jackson
DESIGNED
Brandon Jackson
DRAWN
Sara Putnam
CHECKED
TECH. APPR. Kevin O'Shea, P.E.
APPROVED Alfred I. Bernstein
Peer Reviewer - Plant Structures Group

DENVER, CO 2020-01-24

PUMPING PLANT MASONRY

ELEVATIONS

1695-D-60427

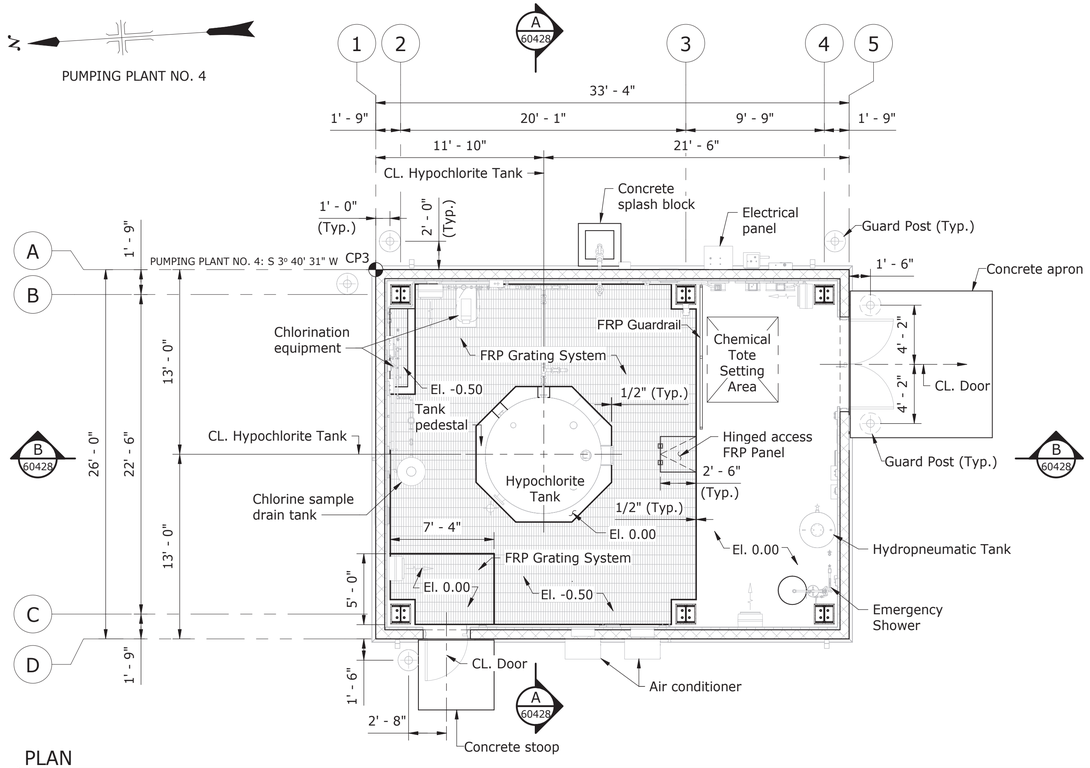

PLAN
Scale: 3/16" = 1'-0"

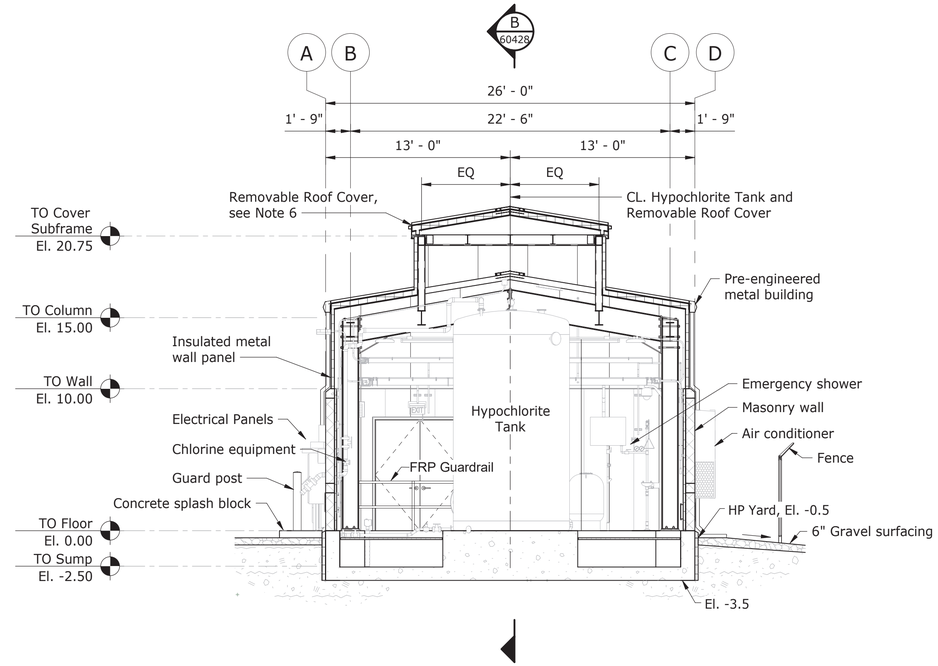

A 60428 SECTION
Scale: 3/16" = 1'-0"

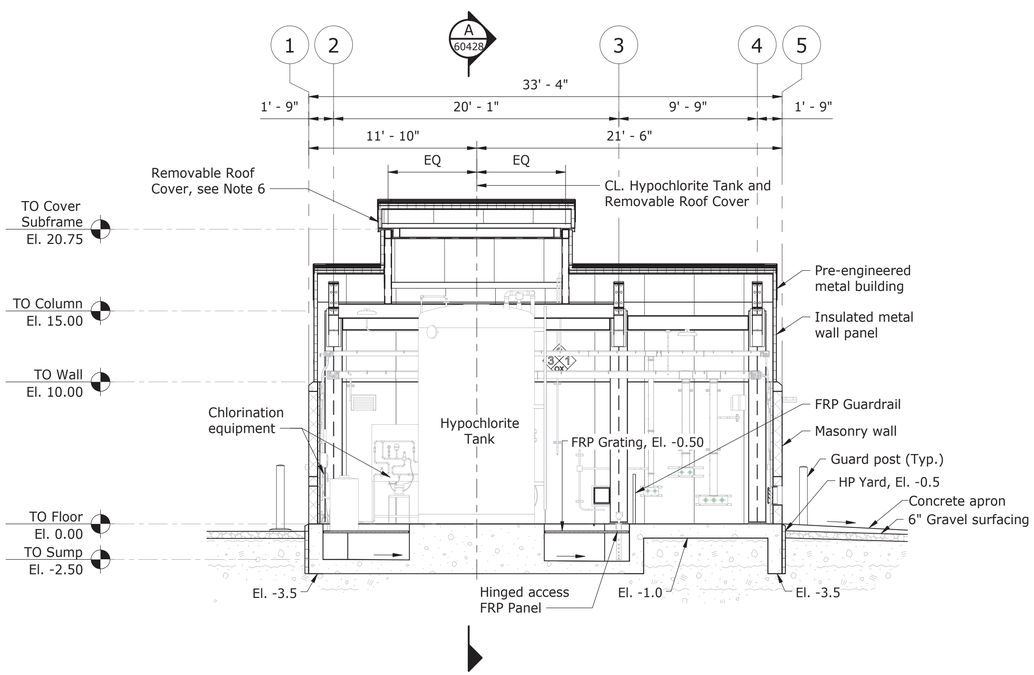

B 60428 SECTION
Scale: 3/16" = 1'-0"

PUMPING PLANT	DATUM (FT)
PUMPING PLANT NO. 4	EL. 5867.50

NOTES:
1. All elevations are based on NAVD88 vertical datum.
2. The datum elevation(s) identified in the table correspond to the El. 0.0 elevation identified on the drawing. All elevations reported on the drawings are relative to the El. 0.0 elevation unless noted otherwise.

0 2' 4' 8'
Scale: 1/4" = 1'-0"

0 5' 10'
Scale: 3/16" = 1'-0"

NOTES

1. For Structural Design Data and Loads, see (60399) and (60400).
2. For Chemical Building control point coordinates, see (60403).
3. For Drawing Index, see (60396) and (60397).
4. For FRP Platform, stairs, and guardrail, see Specifications.
5. All guard posts are Type I, see 40-D-60002.
6. Removable roof cover subframe shall provide a 12'-0" x 12'-0" clear opening for installation and removal of the Hypochlorite storage tank.

RECLAMATION
Managing Water in the West

ALWAYS THINK SAFETY

U.S. DEPARTMENT OF THE INTERIOR
BUREAU OF RECLAMATION
NAVAJO-GALLUP WATER SUPPLY PROJECT
NEW MEXICO

SAN JUAN LATERAL
PUMPING PLANT NOS. 4 AND 7

Sara Putnam
DESIGNED
Sara Putnam
DRAWN
Brandon Jackson
CHECKED
TECH. APPR. Kevin O'Shea, P.E.
APPROVED Alfred I. Bernstein
Peer Reviewer - Plant Structures Group

DENVER, CO 2020-01-24

CHEMICAL BUILDING GENERAL ARRANGMENT

PLAN AND SECTIONS

1695-D-60428

RECLAMATION
Managing Water in the West

PUMPING PLANT NO. 4

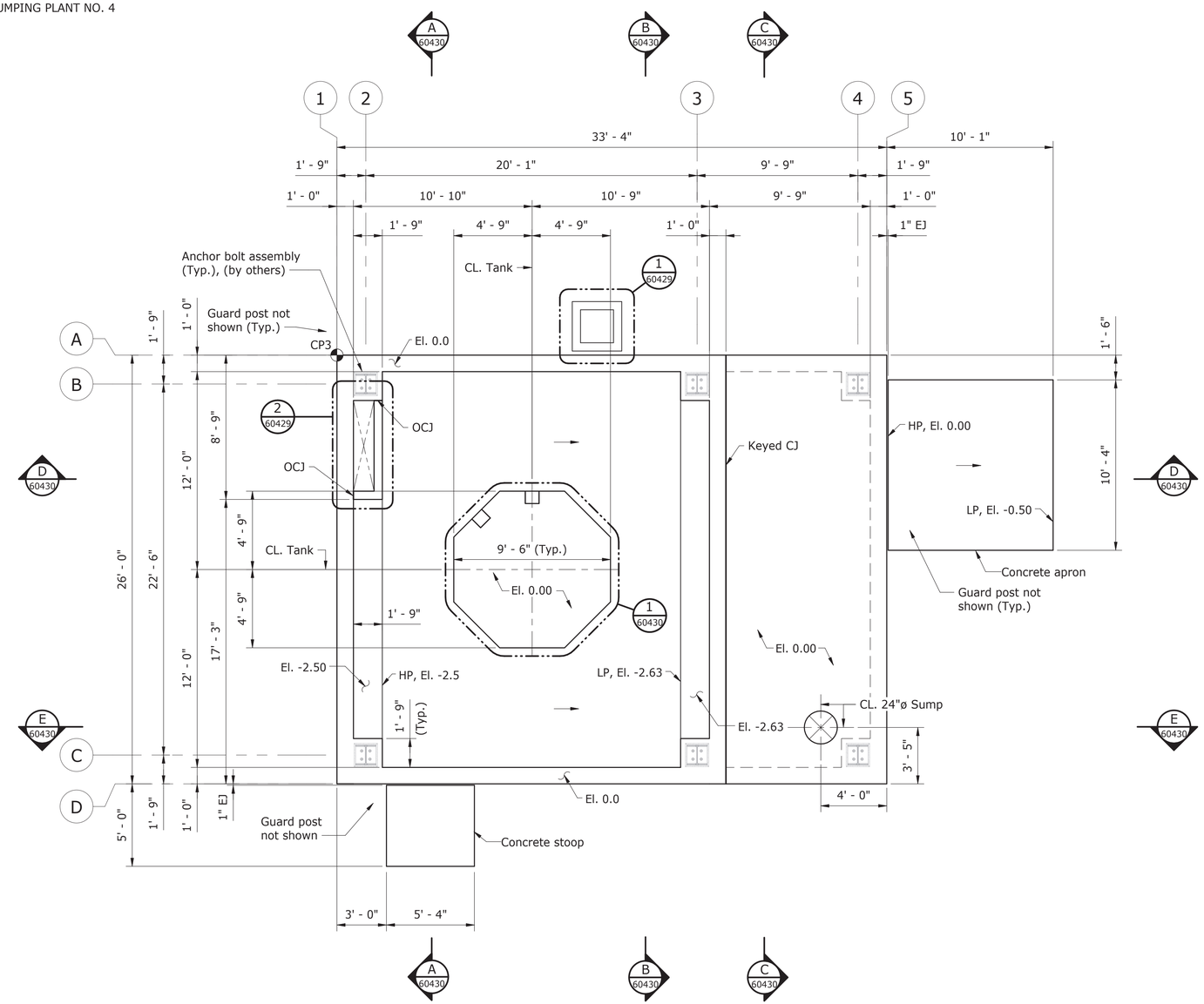

PLAN

Scale: 1/4" = 1'-0"

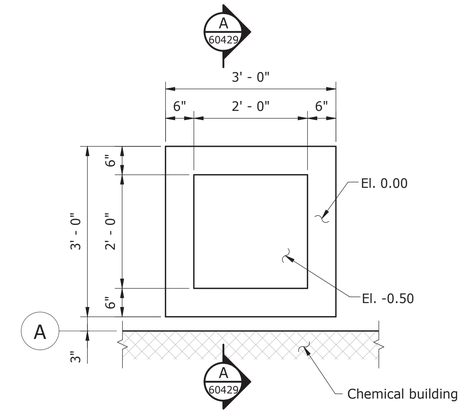

1 DETAIL - CONCRETE SPLASH BLOCK

Scale: 3/4" = 1'-0"

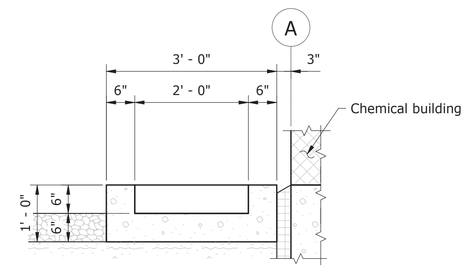

A SECTION

Scale: 3/4" = 1'-0"

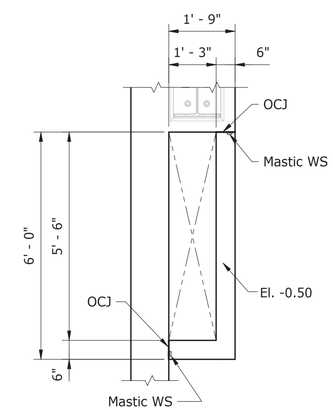

2 DETAIL

Scale: 1/2" = 1'-0"

NOTES

1. For Structural Design Data and Loads, see (60399) and (60400).
2. For Concrete General Notes, see (60414).
3. For Chemical Building control point coordinates, see (60403).
4. For Drawing Index, see (60396) and (60397).

PUMPING PLANT	DATUM (FT)
PUMPING PLANT NO. 4	EL. 5867.50

NOTES:
1. All elevations are based on NAVD88 vertical datum.
2. The datum elevation(s) identified in the table correspond to the El. 0.0 elevation identified on the drawing. All elevations reported on the drawings are relative to the El. 0.0 elevation unless noted otherwise.

0 1' 2' 3' Scale: 3/4" = 1'-0"
0 2' 4' 8' Scale: 1/4" = 1'-0"
0 1' 2' 4' Scale: 1/2" = 1'-0"

ALWAYS THINK **SAFETY**

U.S. DEPARTMENT OF THE INTERIOR
BUREAU OF RECLAMATION
NAVAJO-GALLUP WATER SUPPLY PROJECT
NEW MEXICO

SAN JUAN LATERAL
PUMPING PLANT NOS. 4 AND 7

Sara Putnam
DESIGNED
Sara Putnam
DRAWN
Brandon Jackson
CHECKED
TECH. APPR. Kevin O'Shea, P.E.
APPROVED Alfred I. Bernstein
Peer Reviewer - Plant Structures Group

DENVER, CO 2020-01-24

CHEMICAL BUILDING CONCRETE OUTLINE

PLAN

1695-D-60429

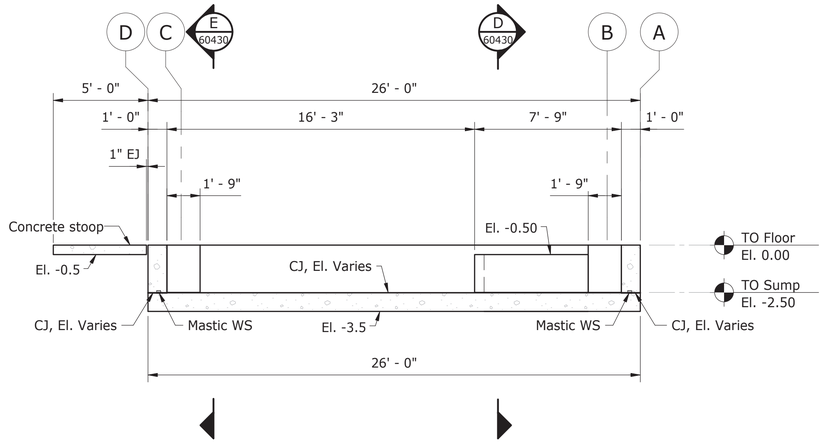

A 60429 SECTION
Scale: 1/4" = 1'-0"

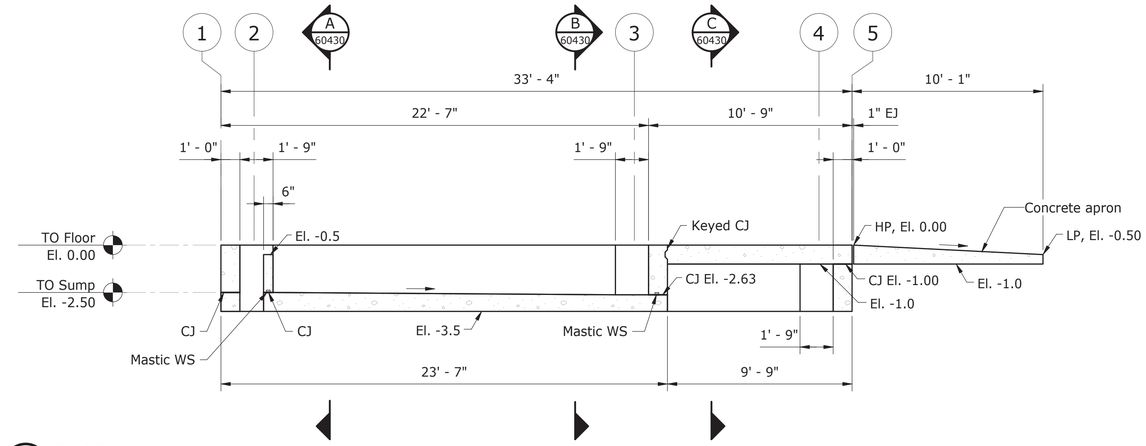

D 60429 SECTION
Scale: 1/4" = 1'-0"

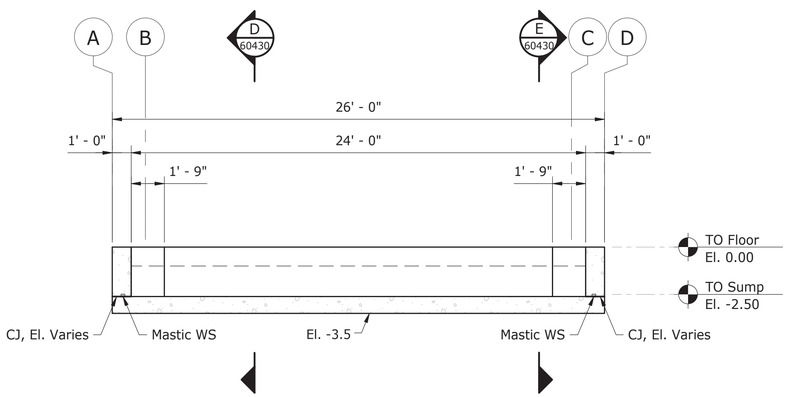

B 60429 SECTION
Scale: 1/4" = 1'-0"

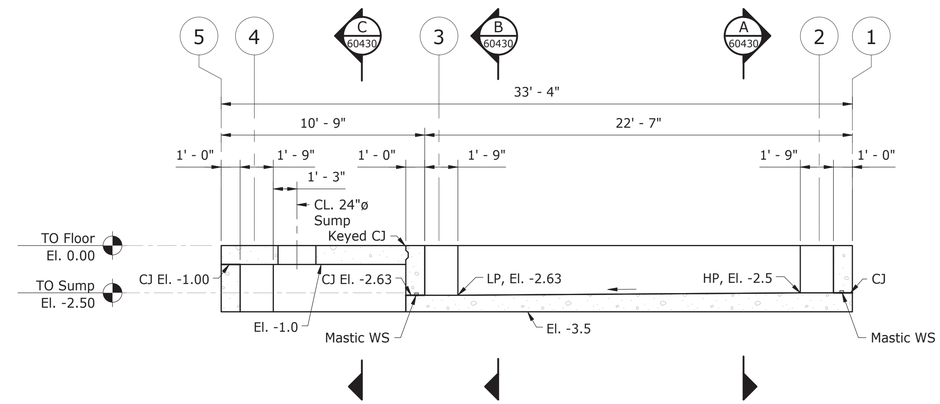

E 60429 SECTION
Scale: 1/4" = 1'-0"

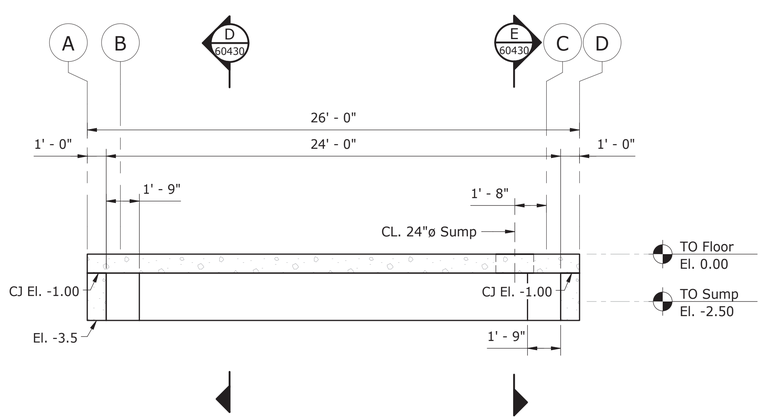

C 60429 SECTION
Scale: 1/4" = 1'-0"

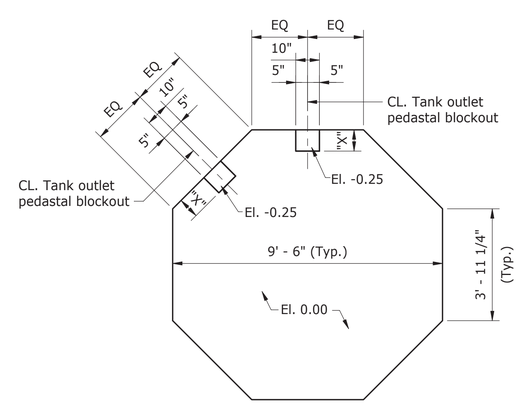

1 60429 DETAIL
Scale: 3/8" = 1'-0"

PUMPING PLANT	DATUM (FT)
PUMPING PLANT NO. 4	EL. 5867.50

NOTES:
1. All elevations are based on NAVD88 vertical datum.
2. The datum elevation(s) identified in the table correspond to the El. 0.0 elevation identified on the drawing. All elevations reported on the drawings are relative to the El. 0.0 elevation unless noted otherwise.

NOTES

1. For Concrete General Notes, see (60414).
2. Government determines "X" dimension after reciept of approved Contractor-furnished drawings and data for the Sodium Hypochlorite Storage Tank.

0 2' 4' 8'
Scale: 1/4" = 1'-0"

0 2' 4' 6'
Scale: 3/8" = 1'-0"

RECLAMATION
Managing Water in the West

ALWAYS THINK **SAFETY**

U.S. DEPARTMENT OF THE INTERIOR
BUREAU OF RECLAMATION

NAVAJO-GALLUP WATER SUPPLY PROJECT
NEW MEXICO

SAN JUAN LATERAL
PUMPING PLANT NOS. 4 AND 7

Sara Putnam
DESIGNED
Sara Putnam
DRAWN
Brandon Jackson
CHECKED
TECH. APPR. Kevin O'Shea, P.E.
APPROVED Alfred I. Bernstein
Peer Reviewer - Plant Structures Group

DENVER, CO 2020-01-24

CHEMICAL BUILDING CONCRETE OUTLINE

SECTIONS

1695-D-60430

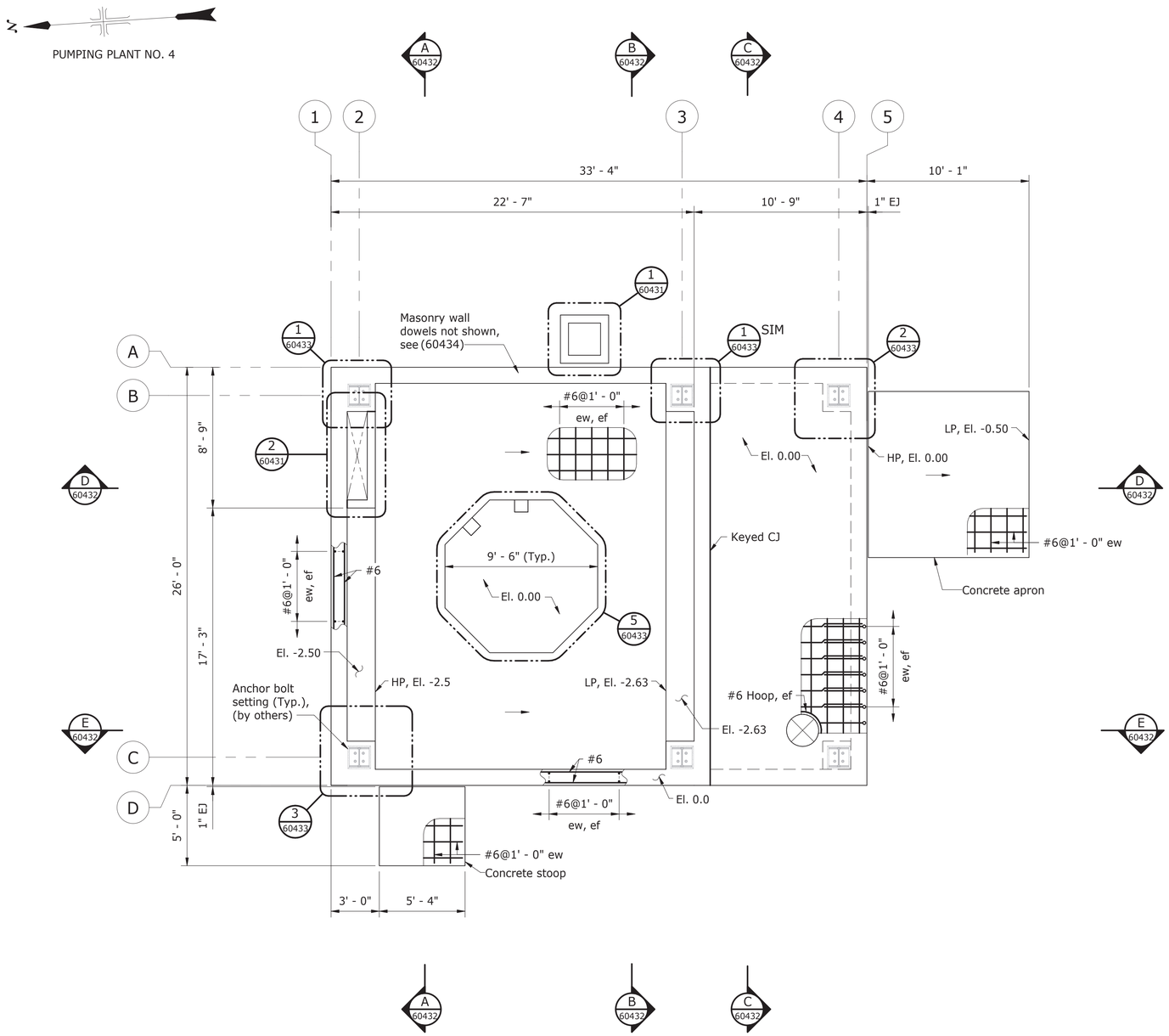

PLAN
Scale: 1/4" = 1'-0"

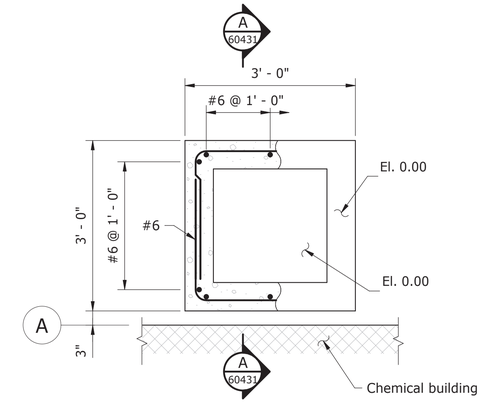

1 DETAIL - CONCRETE SPLASH BLOCK
Scale: 3/4" = 1'-0"

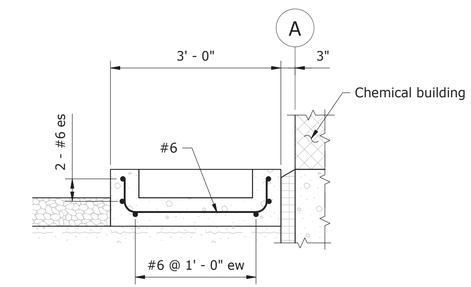

A SECTION
Scale: 3/4" = 1'-0"

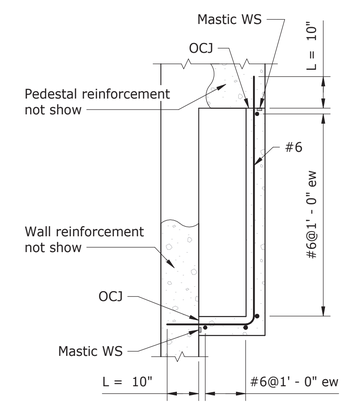

2 DETAIL
Scale: 1/2" = 1'-0"

NOTES

1. For reinforcement design general notes, see (60418).
2. For Structural Design Data and Loads, see (60399) and (60400).
3. Pumping Plant No. 4 control point coordinates, see (60403).
4. For Drawing Index, see (60396) and (60397).

PUMPING PLANT	DATUM (FT)
PUMPING PLANT NO. 4	EL. 5867.50

NOTES:
1. All elevations are based on NAVD88 vertical datum.
2. The datum elevation(s) identified in the table correspond to the El. 0.0 elevation identified on the drawing. All elevations reported on the drawings are relative to the El. 0.0 elevation unless noted otherwise.

0 1' 2' 3' Scale: 3/4" = 1'-0"
0 2' 4' 8' Scale: 1/4" = 1'-0"
0 1' 2' 4' Scale: 1/2" = 1'-0"

RECLAMATION
Managing Water in the West

ALWAYS THINK SAFETY

U.S. DEPARTMENT OF THE INTERIOR
BUREAU OF RECLAMATION
NAVAJO-GALLUP WATER SUPPLY PROJECT
NEW MEXICO

SAN JUAN LATERAL
PUMPING PLANT NOS. 4 AND 7

Sara Putnam
DESIGNED
Sara Putnam
DRAWN
Brandon Jackson
CHECKED
TECH. APPR. Kevin O'Shea, P.E.
APPROVED Alfred I. Bernstein
Peer Reviewer - Plant Structures Group

DENVER, CO 2020-01-24

CHEMICAL BUILDING REINFORCEMENT DESIGN

PLAN

1695-D-60431

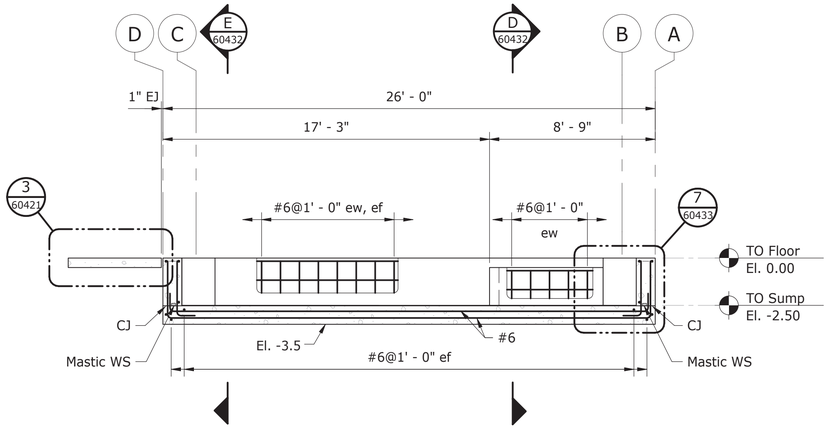

A 60431 SECTION
Scale: 1/4" = 1'-0"

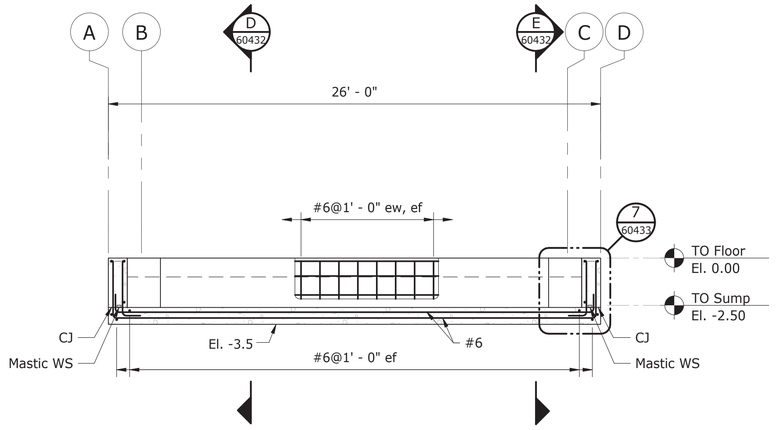

B 60431 SECTION
Scale: 1/4" = 1'-0"

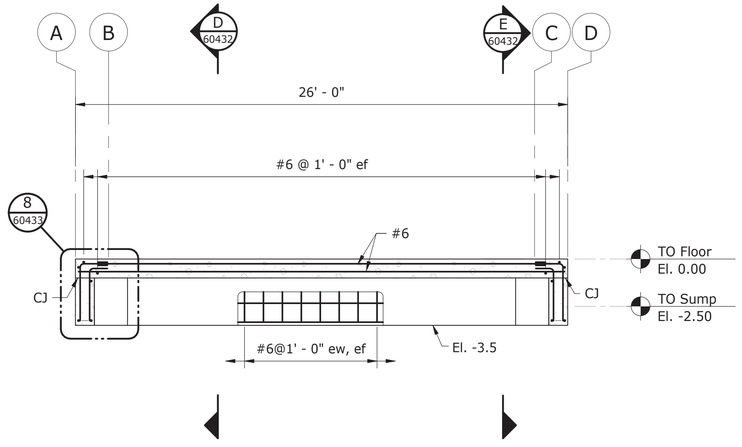

C 60431 SECTION
Scale: 1/4" = 1'-0"

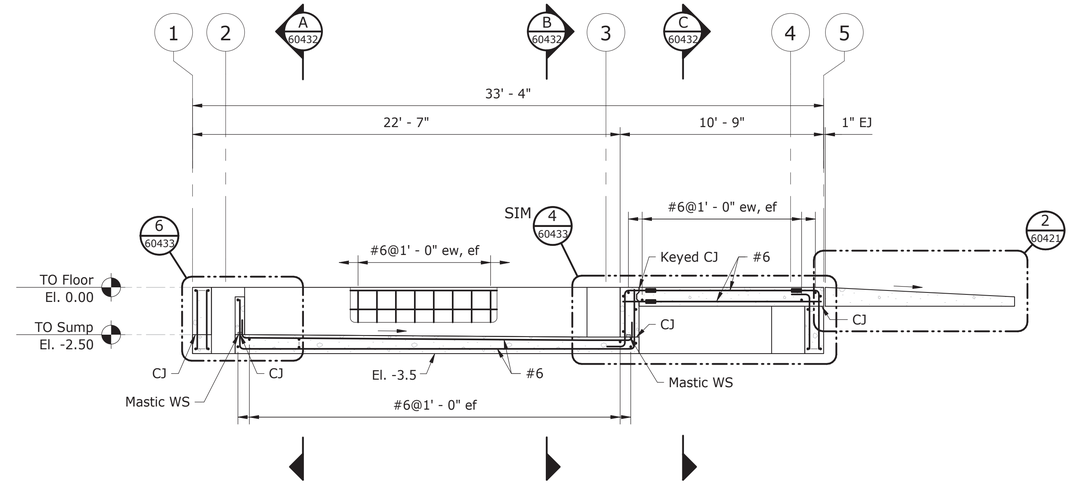

D 60431 SECTION
Scale: 1/4" = 1'-0"

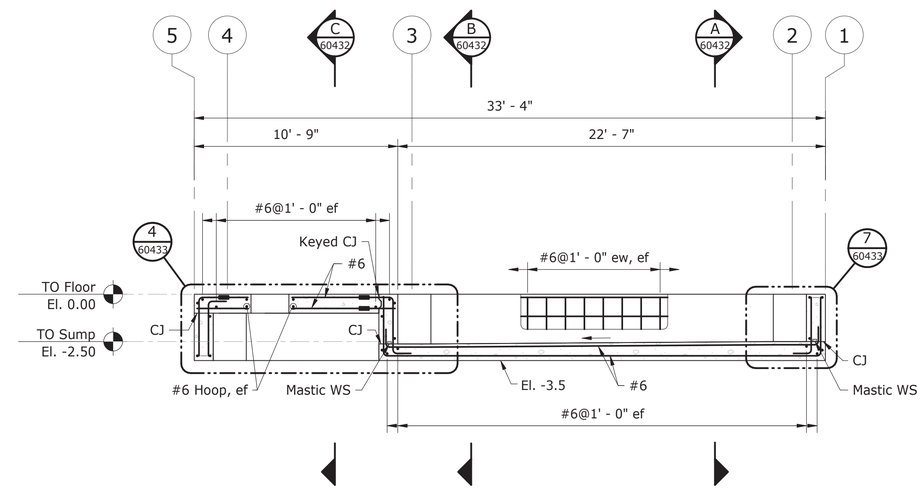

E 60431 SECTION
Scale: 1/4" = 1'-0"

PUMPING PLANT	DATUM (FT)
PUMPING PLANT NO. 4	EL. 5867.50

NOTES:
1. All elevations are based on NAVD88 vertical datum.
2. The datum elevation(s) identified in the table correspond to the El. 0.0 elevation identified on the drawing. All elevations reported on the drawings are relative to the El. 0.0 elevation unless noted otherwise.

NOTES

1. For reinforcement design general notes, see (60418).

0 2' 4' 8'
Scale: 1/4" = 1'-0"

RECLAMATION
Managing Water in the West

ALWAYS THINK **SAFETY**

U.S. DEPARTMENT OF THE INTERIOR
BUREAU OF RECLAMATION
NAVAJO-GALLUP WATER SUPPLY PROJECT
NEW MEXICO
SAN JUAN LATERAL
PUMPING PLANT NOS. 4 AND 7

Sara Putnam
DESIGNED
Sara Putnam
DRAWN
Brandon Jackson
CHECKED
TECH. APPR. Kevin O'Shea, P.E.
APPROVED Alfred I. Bernstein
Peer Reviewer - Plant Structures Group

DENVER, CO 2020-01-24

CHEMICAL BUILDING REINFORCEMENT DESIGN

SECTIONS

1695-D-60432

RECLAMATION
Managing Water in the West

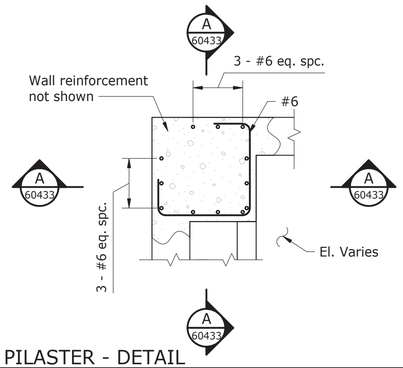

1 60431 PILASTER - DETAIL
Scale: 1/2" = 1'-0"

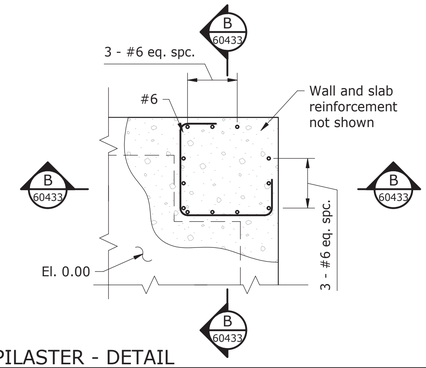

2 60431 PILASTER - DETAIL
Scale: 1/2" = 1'-0"

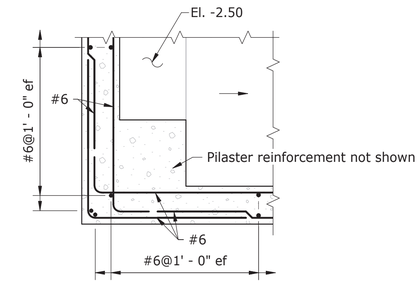

3 60431 DETAIL
Scale: 1/2" = 1'-0"

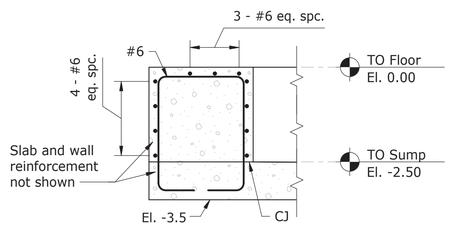

A 60433 SECTION
Scale: 1/2" = 1'-0"

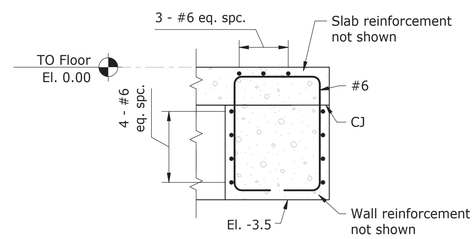

B 60433 SECTION
Scale: 1/2" = 1'-0"

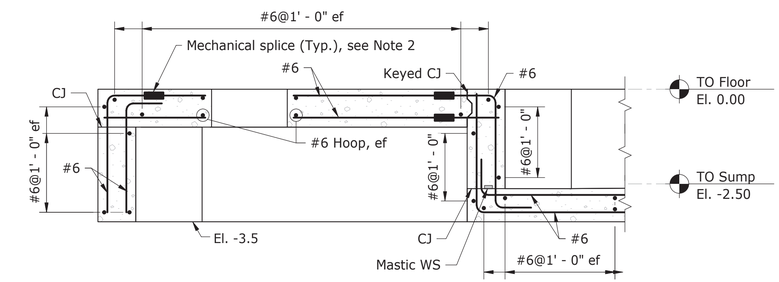

4 60432 DETAIL
Scale: 1/2" = 1'-0"

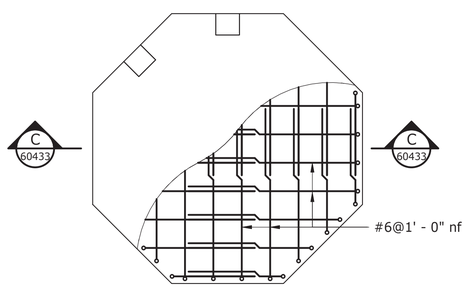

5 60431 DETAIL
Scale: 3/8" = 1'-0"

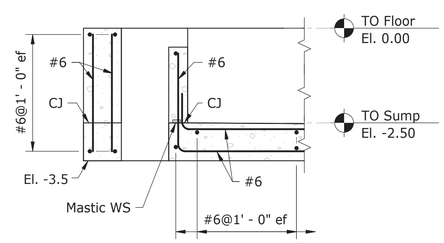

6 60432 DETAIL
Scale: 1/2" = 1'-0"

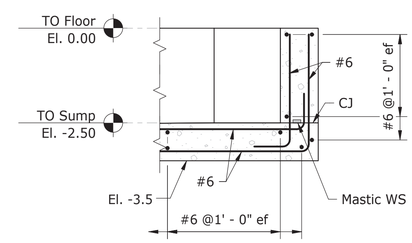

7 60432 RD - Wall 4
Scale: 1/2" = 1'-0"

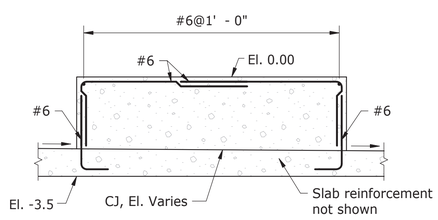

C 60433 SECTION
Scale: 3/8" = 1'-0"

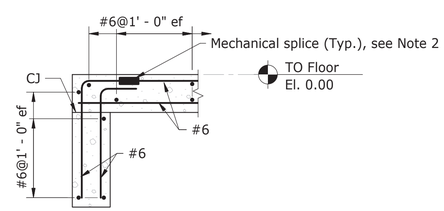

8 60432 DETAIL
Scale: 1/2" = 1'-0"

PUMPING PLANT	DATUM (FT)
PUMPING PLANT NO. 4	EL. 5867.50

NOTES:
1. All elevations are based on NAVD88 vertical datum.
2. The datum elevation(s) identified in the table correspond to the El. 0.0 elevation identified on the drawing. All elevations reported on the drawings are relative to the El. 0.0 elevation unless noted otherwise.

NOTES

1. For reinforcement design general Notes, see (60418).
2. Mechanical reinforcement splices may be provided to facilitate construction, see Specifications.

0 2' 4' 6' Scale: 3/8" = 1'-0"
0 1' 2' 4' Scale: 1/2" = 1'-0"

ALWAYS THINK **SAFETY**

U.S. DEPARTMENT OF THE INTERIOR
BUREAU OF RECLAMATION
NAVAJO-GALLUP WATER SUPPLY PROJECT
NEW MEXICO

SAN JUAN LATERAL
PUMPING PLANT NOS. 4 AND 7

Sara Putnam
DESIGNED
Sara Putnam
DRAWN
Brandon Jackson
CHECKED
TECH. APPR. Kevin O'Shea, P.E.
APPROVED Alfred I. Bernstein
Peer Reviewer - Plant Structures Group

DENVER, CO 2020-01-24

CHEMICAL BUILDING REINFORCEMENT DESIGN

DETAILS

1695-D-60433

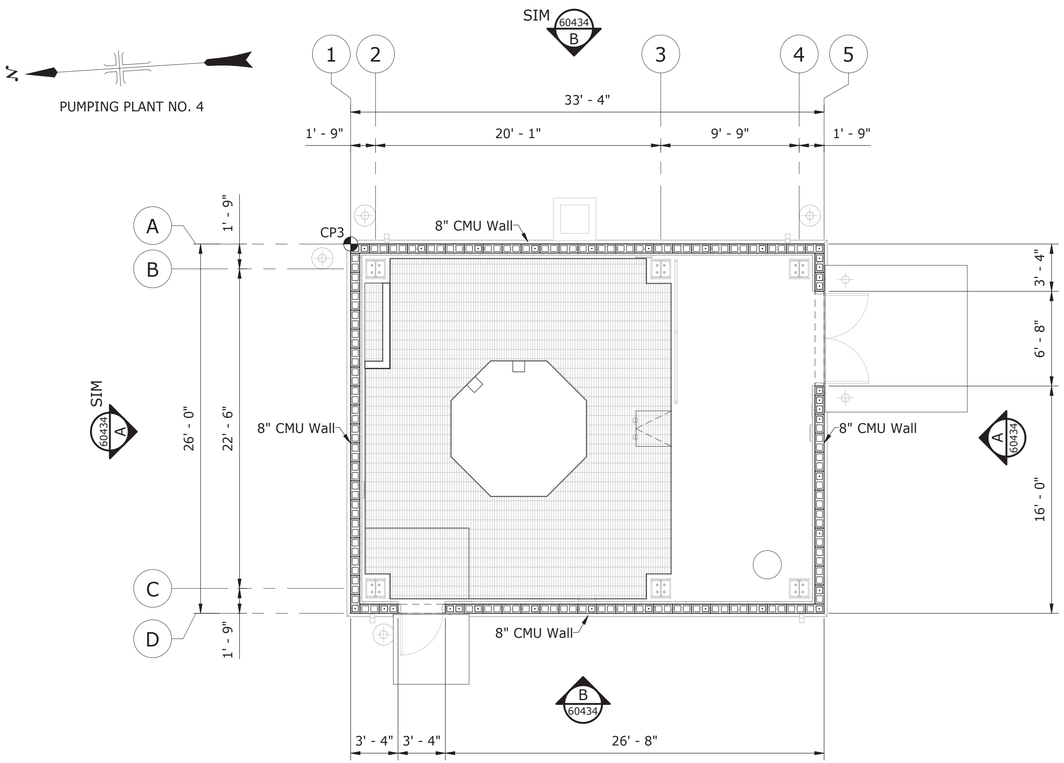

PLAN
Scale: 3/16" = 1'-0"

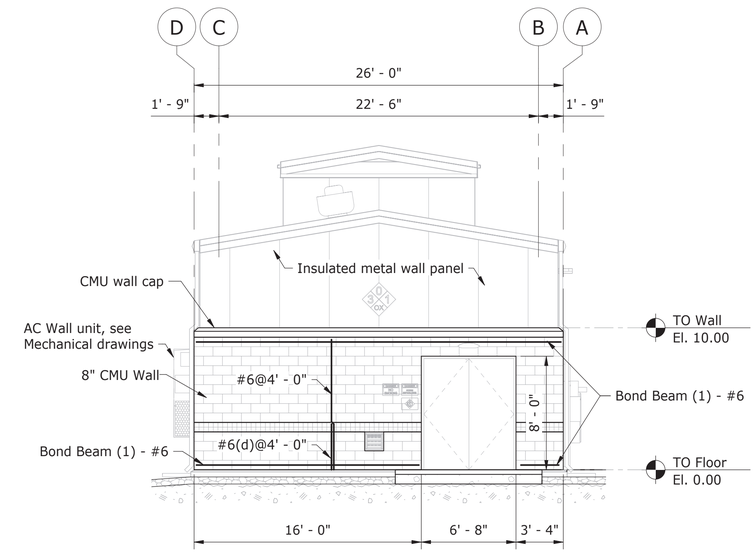

A ELEVATION
Scale: 3/16" = 1'-0"

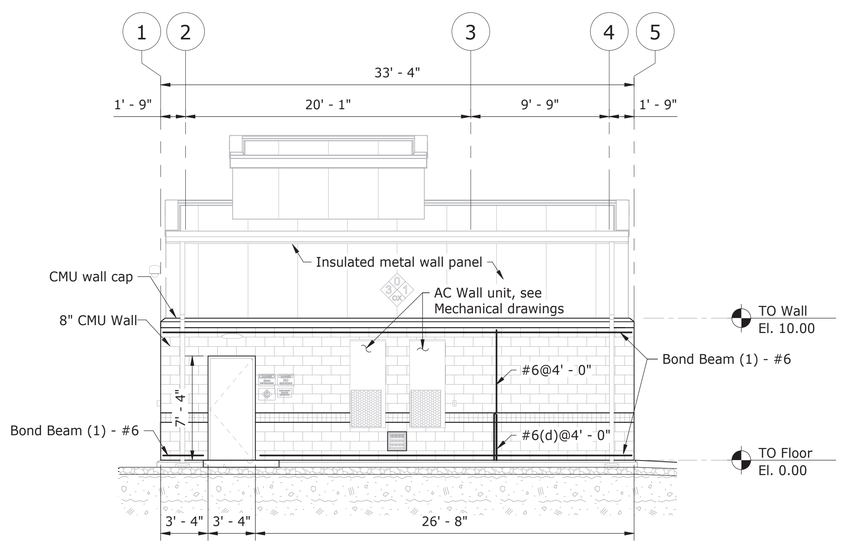

B ELEVATION
Scale: 3/16" = 1'-0"

PUMPING PLANT	DATUM (FT)
PUMPING PLANT NO. 4	EL. 5867.50

NOTES:
1. All elevations are based on NAVD88 vertical datum.
2. The datum elevation(s) identified in the table correspond to the El. 0.0 elevation identified on the drawing. All elevations reported on the drawings are relative to the El. 0.0 elevation unless noted otherwise.

NOTES

1. For Masonry Design General Notes, see (60422).
2. For Typical Details, see (60422).
3. For Structural Design Data and Loads, see (60399) and (60400).
4. For Chemical Building control point coordinates, see (60403).
5. For Drawing Index, see (60396) and (60397).

0 5' 10'
Scale: 3/16" = 1'-0"

RECLAMATION
Managing Water in the West

ALWAYS THINK **SAFETY**

U.S. DEPARTMENT OF THE INTERIOR
BUREAU OF RECLAMATION
NAVAJO-GALLUP WATER SUPPLY PROJECT
NEW MEXICO
SAN JUAN LATERAL
PUMPING PLANT NOS. 4 AND 7

Brandon Jackson
DESIGNED
Brandon Jackson
DRAWN
Sara Putnam
CHECKED
TECH. APPR. Kevin O'Shea, P.E.
APPROVED Alfred I. Bernstein
Peer Reviewer - Plant Structures Group

DENVER, CO 2020-01-24

CHEMICAL BUILDING MASONRY

PLAN AND ELEVATIONS

1695-D-60434

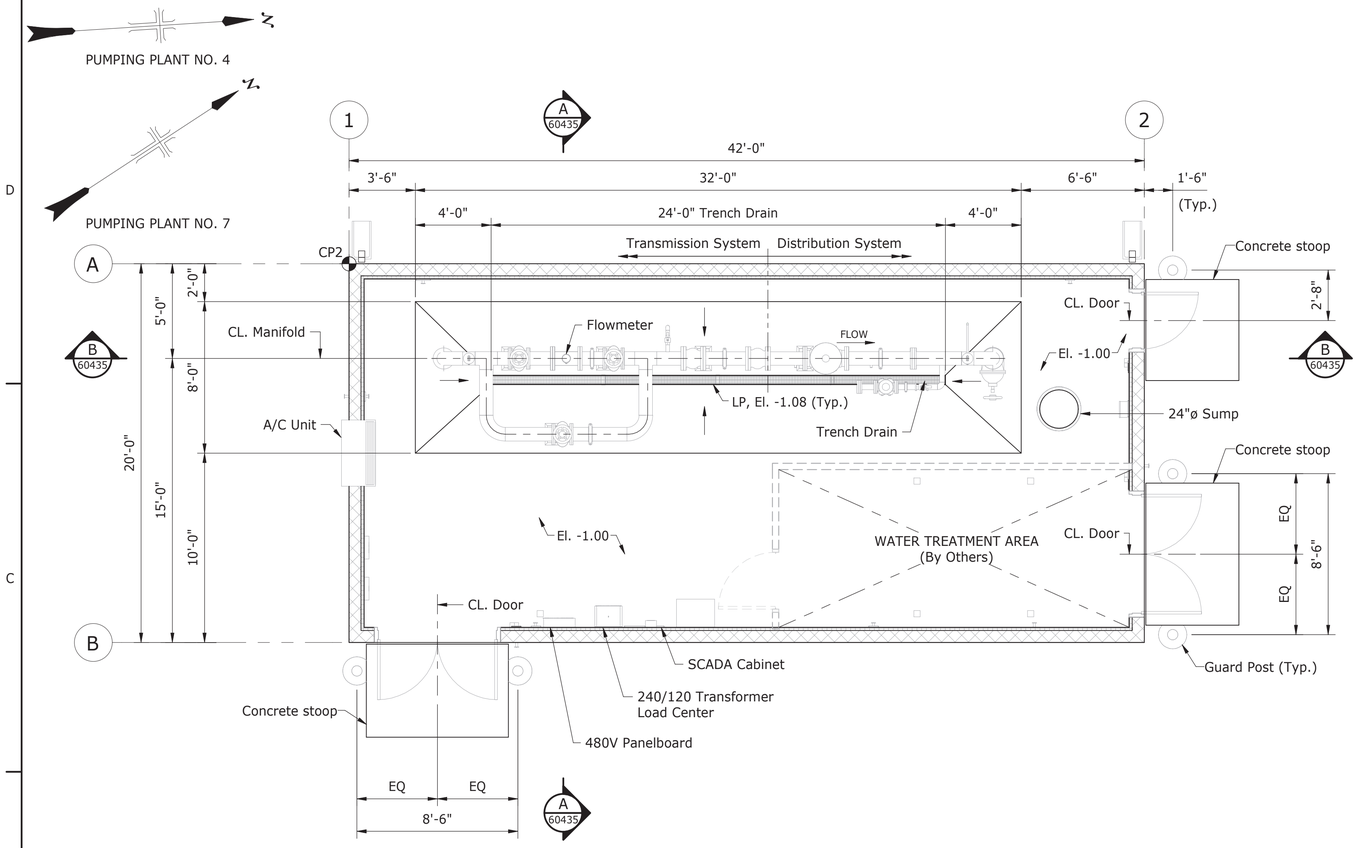

PLAN

Scale: 1/4" = 1'-0"

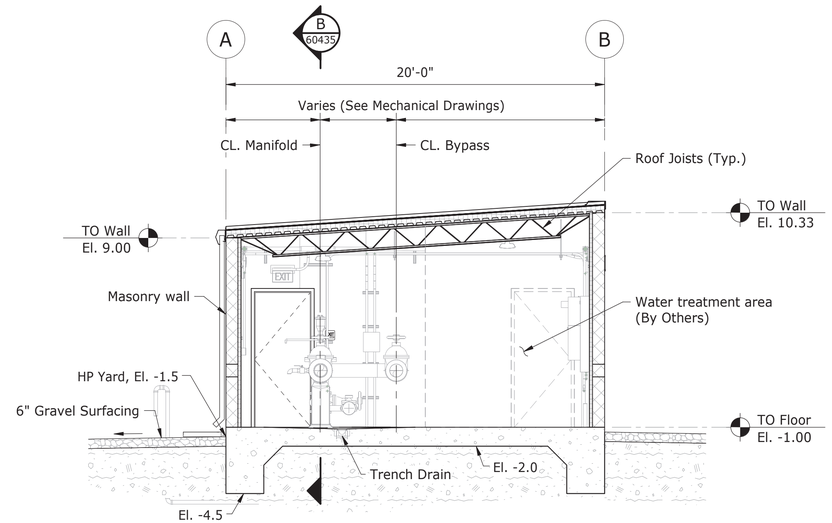

A TRANSVERSE SECTION

Scale: 1/4" = 1'-0"

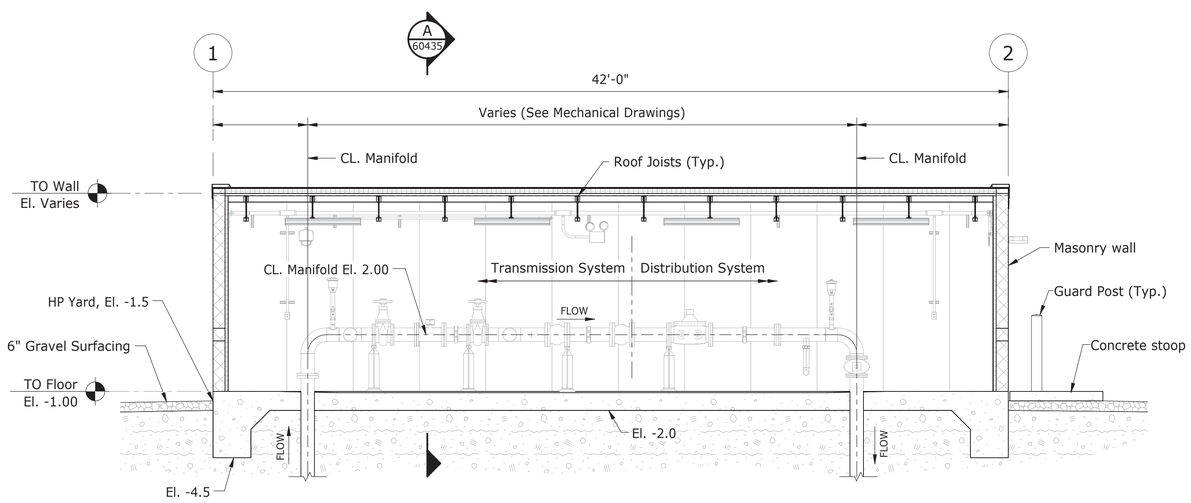

B LONGITUDINAL SECTION

Scale: 1/4" = 1'-0"

PUMPING PLANT	DATUM (FT)
PUMPING PLANT NO. 4	EL. 5867.50
PUMPING PLANT NO. 7	EL. 6215.00

NOTES:
1. All elevations are based on NAVD88 vertical datum.
2. The datum elevation(s) identified in the table correspond to the El. 0.0 elevation identified on the drawing. All elevations reported on the drawings are relative to the El. 0.0 elevation unless noted otherwise.

NOTES

1. For Structural Design Data and Loads, see (60399) and (60400).
2. Pumping Plant No. 4 control point coordinates, see (60403).
3. Pumping Plant No. 7 control point coordinates, see (60406).
4. For Drawing Index, see (60396) and (60397).
5. All guard posts are Type I, see 40-D-60002.

0 2' 4' 8'
Scale: 1/4" = 1'-0"

RECLAMATION
Managing Water in the West

ALWAYS THINK **SAFETY**

U.S. DEPARTMENT OF THE INTERIOR
BUREAU OF RECLAMATION
NAVAJO-GALLUP WATER SUPPLY PROJECT
NEW MEXICO

SAN JUAN LATERAL
PUMPING PLANT NOS. 4 AND 7

Kendra Schiell
DESIGNED
Kendra Schiell
DRAWN
Brandon Jackson
CHECKED
TECH. APPR. Kevin O'Shea, P.E.
APPROVED Alfred I. Bernstein
Peer Reviewer - Plant Structures Group

DENVER, CO 2020-01-24

TURNOUT BUILDING GENERAL ARRANGEMENT

PLAN AND SECTIONS

1695-D-60435

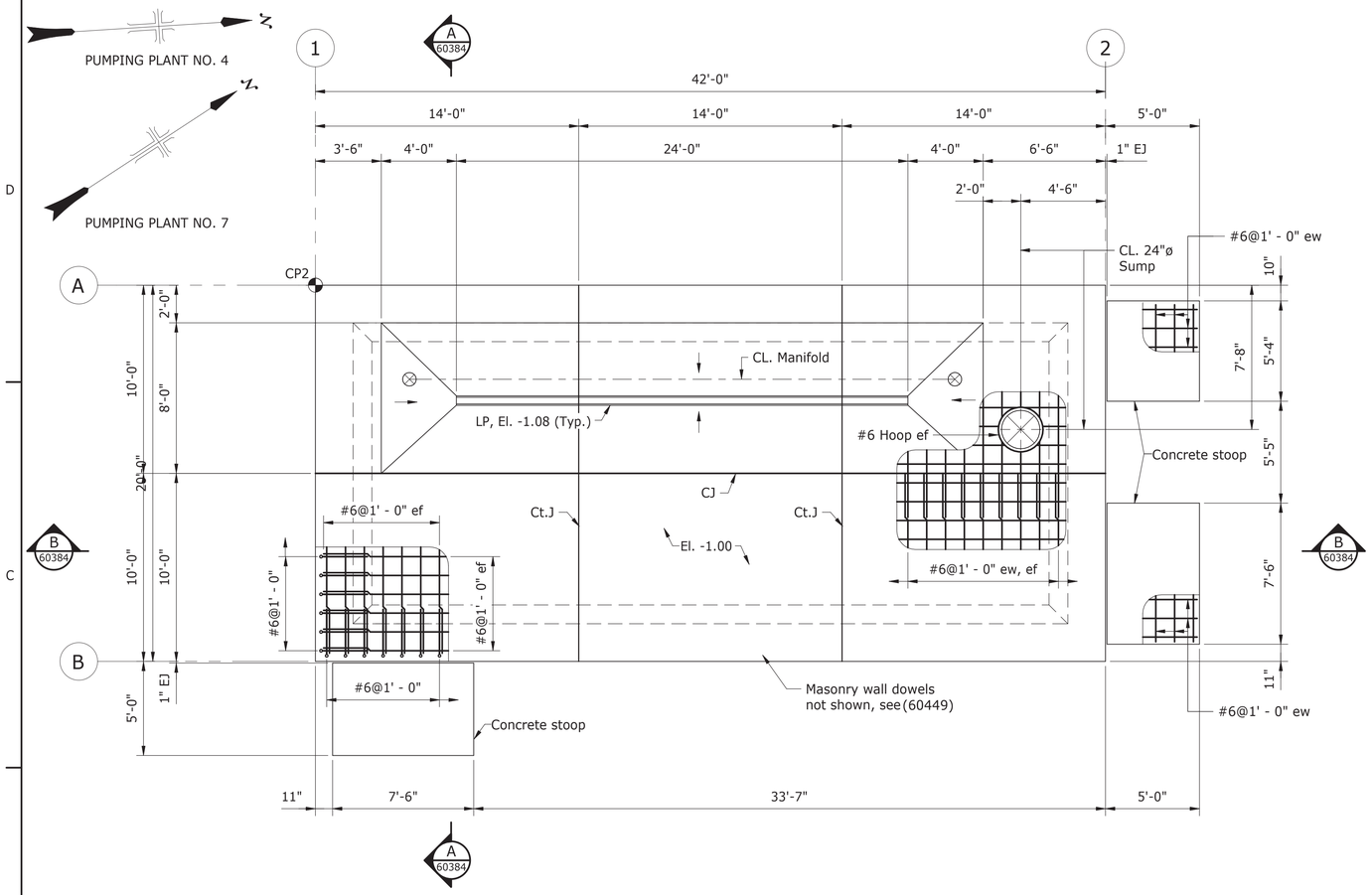

PLAN

Scale: 1/4" = 1'-0"

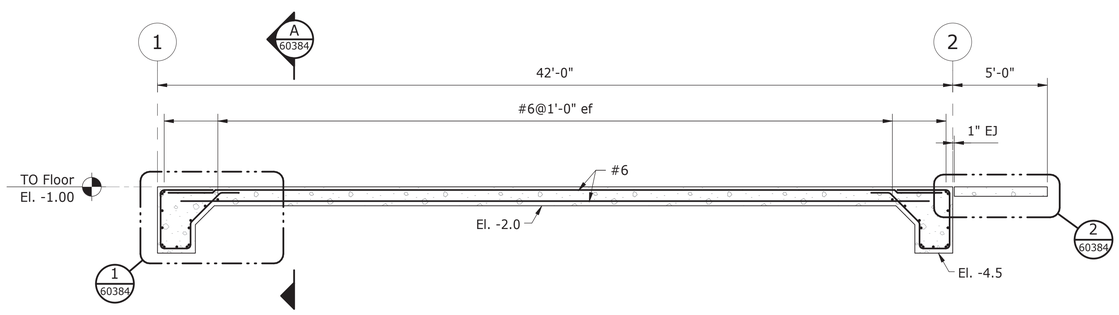

B SECTION

Scale: 1/4" = 1'-0"

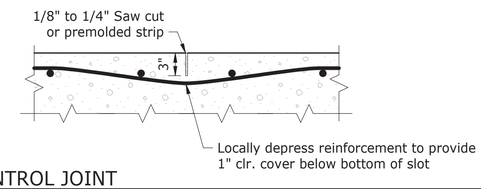

TYPICAL CONTROL JOINT

(NTS)

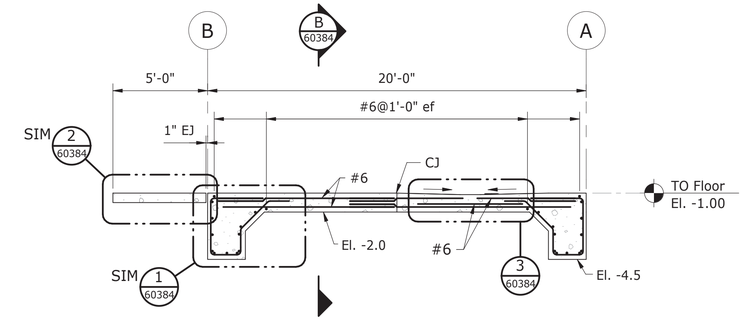

A SECTION

Scale: 1/4" = 1'-0"

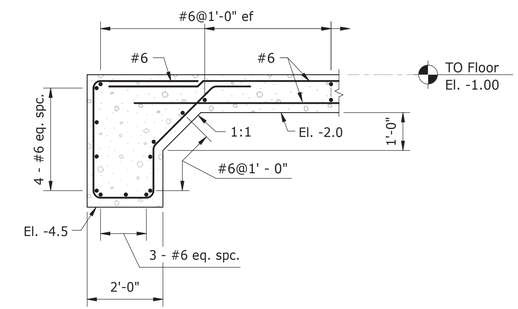

1 DETAIL - THICKENED EDGE

Scale: 1/2" = 1'-0"

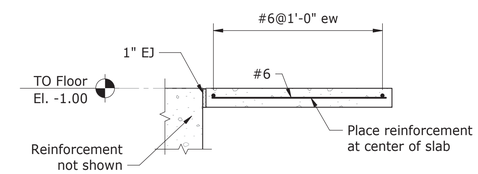

2 DETAIL - CONCRETE STOOP

Scale: 1/2" = 1'-0"

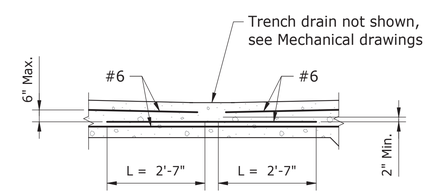

3 DETAIL

Scale: 1/2" = 1'-0"

PUMPING PLANT	DATUM (FT)
PUMPING PLANT NO. 4	EL. 5867.50
PUMPING PLANT NO. 7	EL. 6215.00

NOTES:
1. All elevations are based on NAVD88 vertical datum.
2. The datum elevation(s) identified in the table correspond to the El. 0.0 elevation identified on the drawing. All elevations reported on the drawings are relative to the El. 0.0 elevation unless noted otherwise.

NOTES

1. For Structural Design Data and Loads, see (60399) and (60400).
2. For Concrete General Notes, see (60414).
3. For reinforcement design general notes, see (60418).
4. Pumping Plant No. 4 Turnout Building control point coordinates, see (60403).
5. Pumping Plant No. 7 Turnout Building control point coordinates, see (60406).
6. For Drawing Index, see (60396) and (60397).

Scale: 1/4" = 1'-0" Scale: 1/2" = 1'-0"

RECLAMATION
Managing Water in the West

ALWAYS THINK SAFETY

U.S. DEPARTMENT OF THE INTERIOR
BUREAU OF RECLAMATION
NAVAJO-GALLUP WATER SUPPLY PROJECT
NEW MEXICO

SAN JUAN LATERAL
PUMPING PLANT NOS. 4 AND 7

Kendra Schiell
DESIGNED
Kendra Schiell
DRAWN
Brandon Jackson
CHECKED
TECH. APPR. Kevin O'Shea, P.E.
APPROVED Alfred I. Bernstein
Peer Reviewer - Plant Structures Group

DENVER, CO 2020-01-24

TURNOUT BUILDING CONCRETE OUTLINE AND REINFORCEMENT DESIGN

PLAN, SECTIONS, AND DETAILS

1695-D-60384

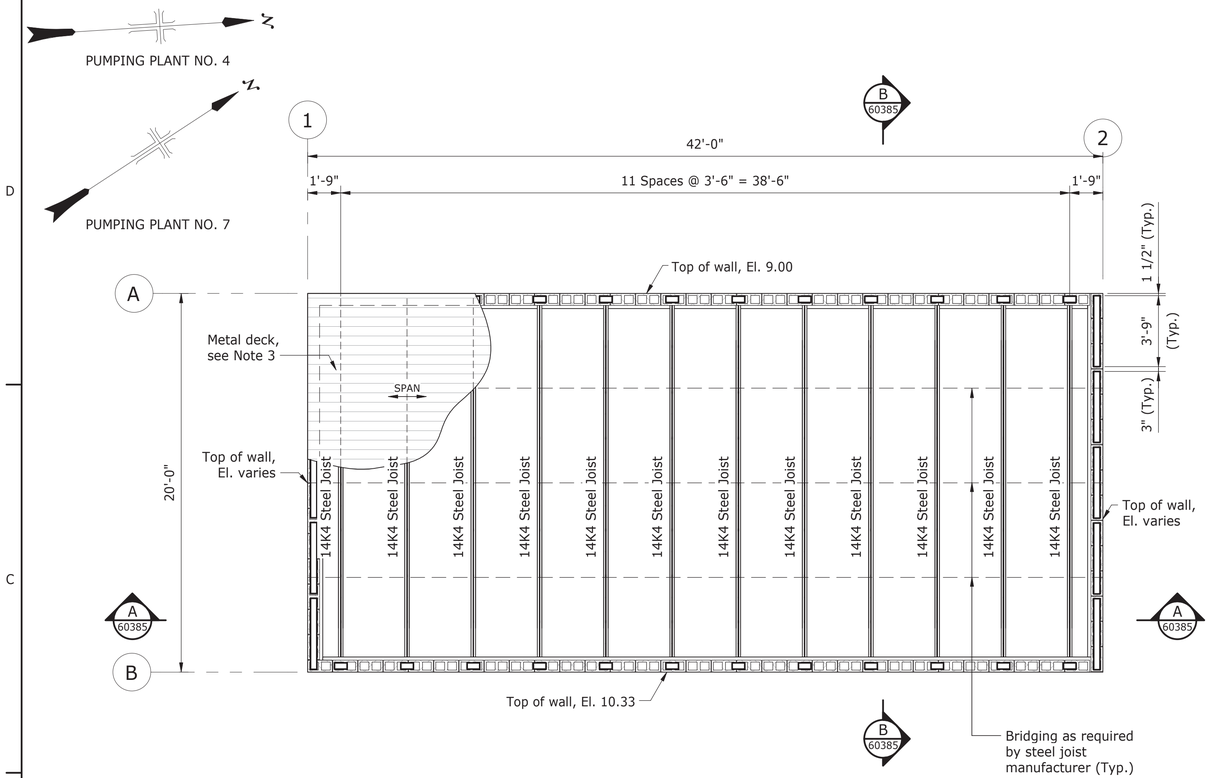

ROOF FRAMING PLAN

Scale: 1/4" = 1'-0"

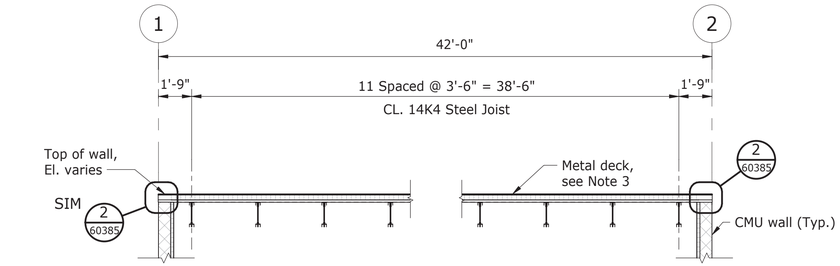

A SECTION

Scale: 1/4" = 1'-0"

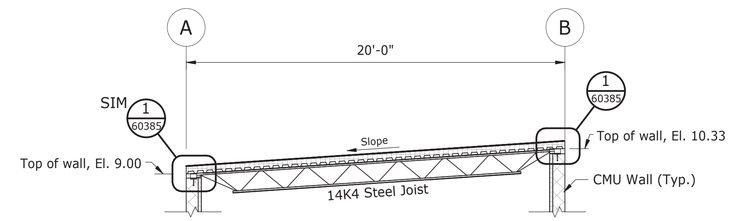

B SECTION

Scale: 1/4" = 1'-0"

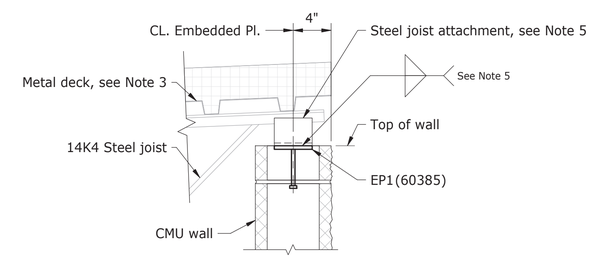

1 DETAIL - JOIST ANCHOR PLATE

Scale: 1 1/2" = 1'-0"

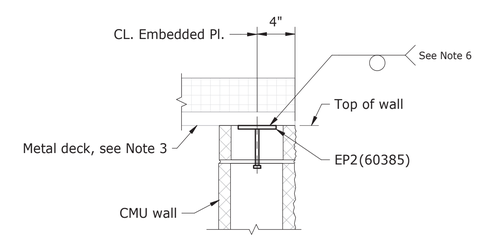

2 DETAIL - METAL DECK ANCHOR PLATE

Scale: 1 1/2" = 1'-0"

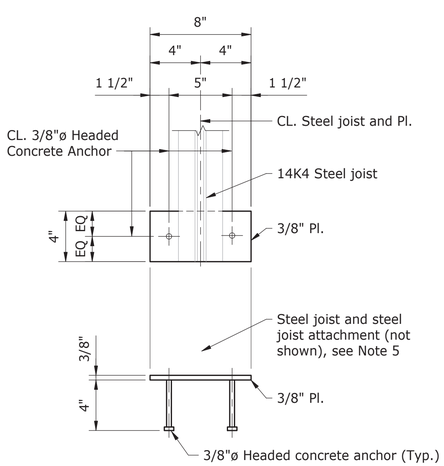

EP1 - EMBEDDED PLATE

24 REQ'D

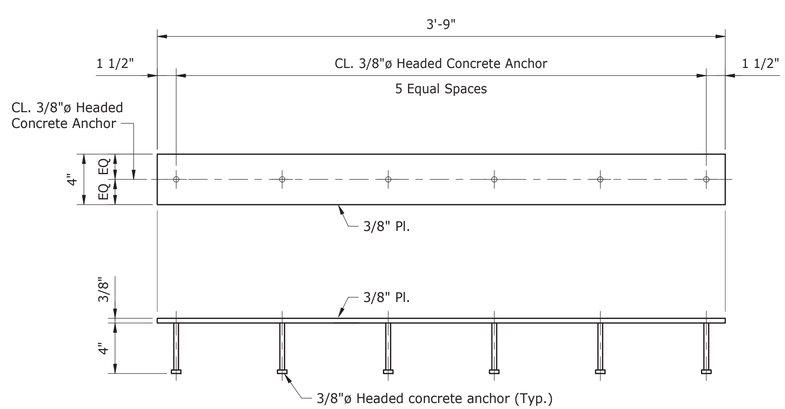

EP2 - EMBEDDED PLATE

10 REQ'D

PUMPING PLANT	DATUM (FT)
PUMPING PLANT NO. 4	EL. 5867.50
PUMPING PLANT NO. 7	EL. 6215.00

NOTES:
1. All elevations are based on NAVD88 vertical datum.
2. The datum elevation(s) identified in the table correspond to the El. 0.0 elevation identified on the drawing. All elevations reported on the drawings are relative to the El. 0.0 elevation unless noted otherwise.

0 2' 4' 8'
Scale: 1/4" = 1'-0"

0 1/2' 1' 1 1/2'
Scale: 1 1/2" = 1'-0"

NOTES

1. For Structural Design Data and Loads, see (60399) and (60400).
2. For Drawing Index, see (60396) and (60397).
3. Metal deck: 1.5B22 denotes 1.5-inch Type "B" 22 gage non-composite metal deck as manufactured by Vulcraft or equal. Metal deck design is based on a minimum two span condition.
4. 14K4 denotes a 14-inch depth K-Series Type 7 open web steel joist as manufactured by Vulcraft or equal. Joists shall have a top chord extensions and sloped seats as required for attachment to embedded anchor plates.
5. Attach steel joists to embedded anchor plate recommended by steel joist manufacturer.
6. Attach metal deck to steel joists and embedded anchor plates as recommended by steel joist manufacturer.

RECLAMATION
Managing Water in the West

ALWAYS THINK SAFETY

U.S. DEPARTMENT OF THE INTERIOR
BUREAU OF RECLAMATION
NAVAJO-GALLUP WATER SUPPLY PROJECT
NEW MEXICO

SAN JUAN LATERAL
PUMPING PLANT NOS. 4 AND 7

Kendra Schiell
DESIGNED
Kendra Schiell
DRAWN
Brandon Jackson
CHECKED
TECH. APPR. Kevin O'Shea, P.E.
APPROVED Alfred I. Bernstein
Peer Reviewer - Plant Structures Group

DENVER, CO 2020-01-24

TURNOUT BUILDING STRUCTURAL STEEL ROOF FRAMING

PLAN, SECTIONS, AND DETAILS

1695-D-60385

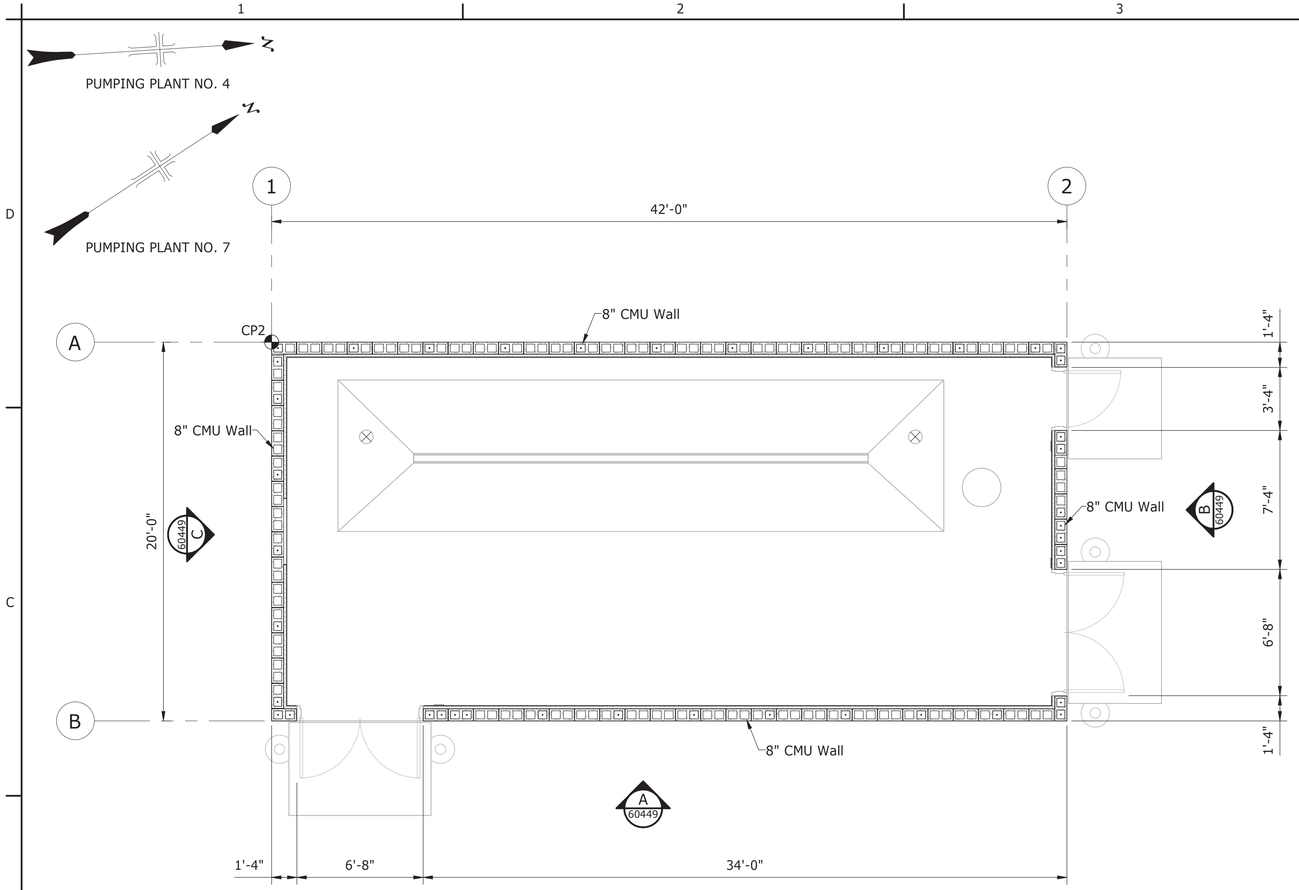

PLAN
Scale: 1/4" = 1'-0"

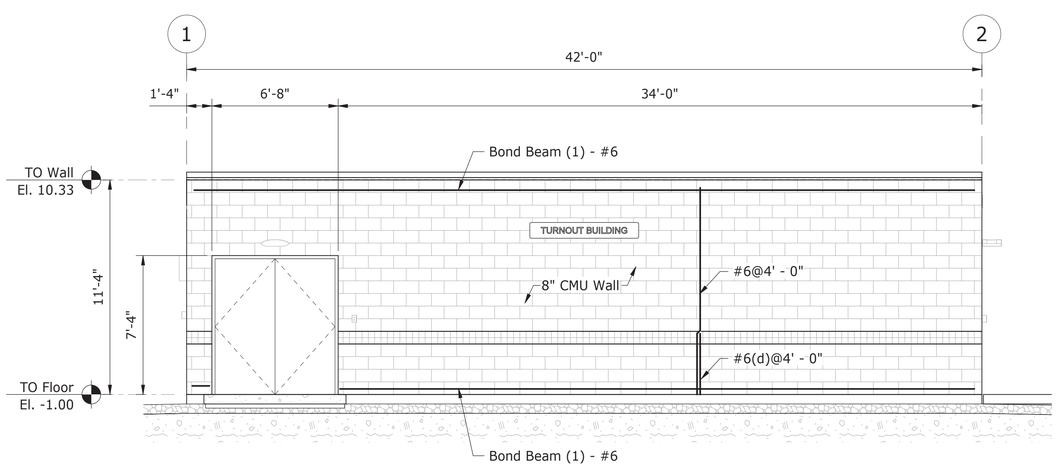

A ELEVATION
Scale: 1/4" = 1'-0"

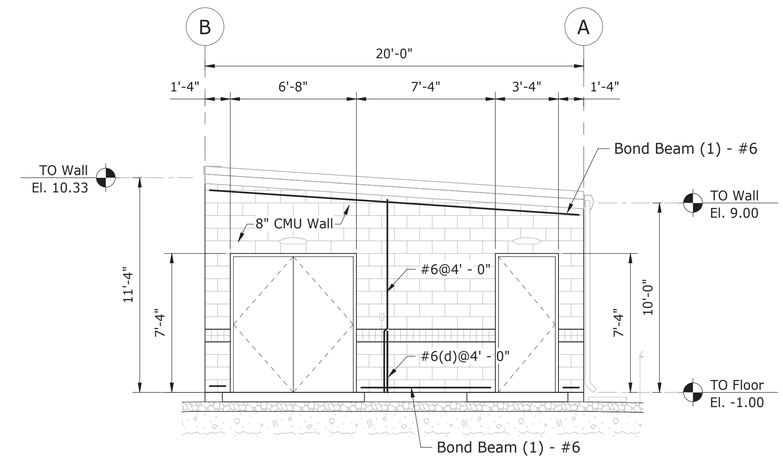

B ELEVATION
Scale: 1/4" = 1'-0"

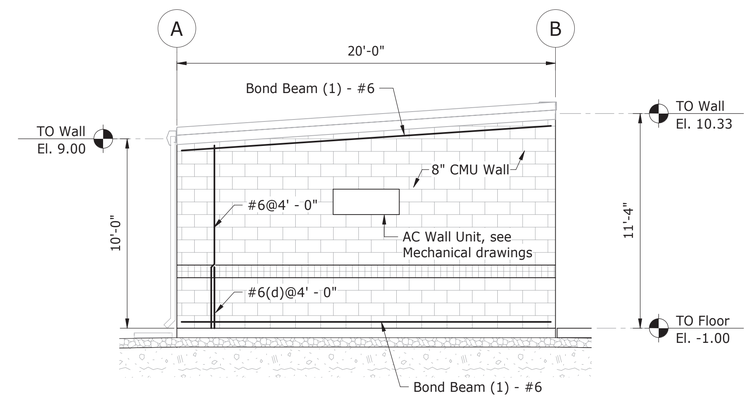

C ELEVATION
Scale: 1/4" = 1'-0"

PUMPING PLANT	DATUM (FT)
PUMPING PLANT NO. 4	EL. 5867.50
PUMPING PLANT NO. 7	EL. 6215.00

NOTES:
1. All elevations are based on NAVD88 vertical datum.
2. The datum elevation(s) identified in the table correspond to the El. 0.0 elevation identified on the drawing. All elevations reported on the drawings are relative to the El. 0.0 elevation unless noted otherwise.

NOTES

1. For Structural Design Data and Loads, see (60399) and (60400).
2. For Masonry Design General Notes, see (60422).
3. For Masonry Typical Details, see (60422).
4. For Turnout Building foundation, see (60488).
5. Pumping Plant No. 4 control point coordinates, see (60403).
6. Pumping Plant No. 7 control point coordinates, see (60406).
7. For Drawing Index, see (60396) and (60397).

0 2' 4' 8'
Scale: 1/4" = 1'-0"

RECLAMATION
Managing Water in the West

ALWAYS THINK **SAFETY**

U.S. DEPARTMENT OF THE INTERIOR
BUREAU OF RECLAMATION
NAVAJO-GALLUP WATER SUPPLY PROJECT
NEW MEXICO

SAN JUAN LATERAL
PUMPING PLANT NOS. 4 AND 7

Kendra Schiell
DESIGNED
Kendra Schiell
DRAWN
Brandon Jackson
CHECKED
TECH. APPR. Kevin O'Shea, P.E.
APPROVED Alfred I. Bernstein
Peer Reviewer - Plant Structures Group

DENVER, CO 2020-01-24

TURNOUT BUILDING MASONRY

PLAN AND ELEVATIONS

1695-D-60449

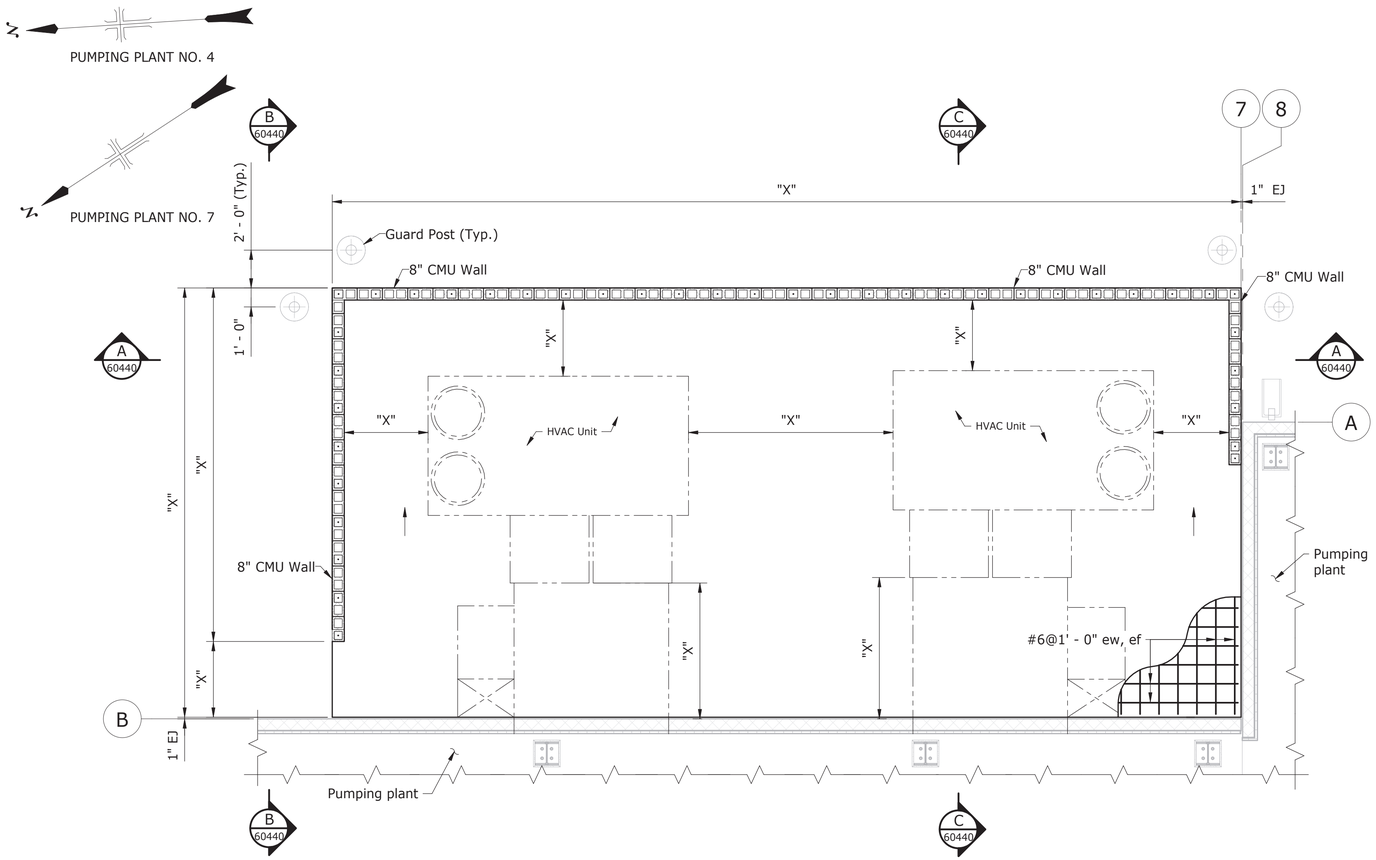

PLAN
Scale: 1/4" = 1'-0"

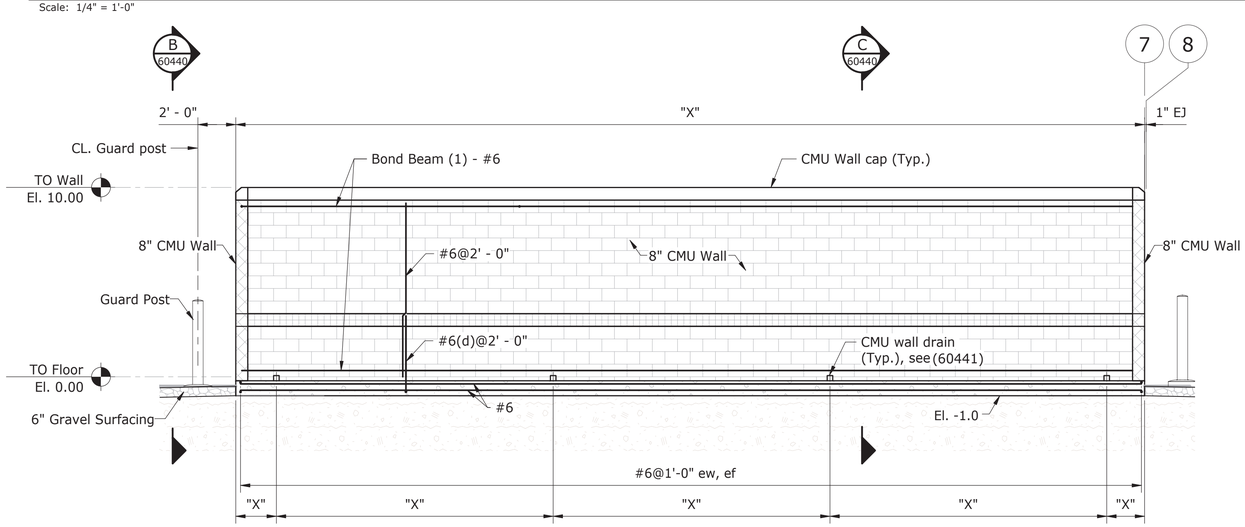

A SECTION
Scale: 1/4" = 1'-0"

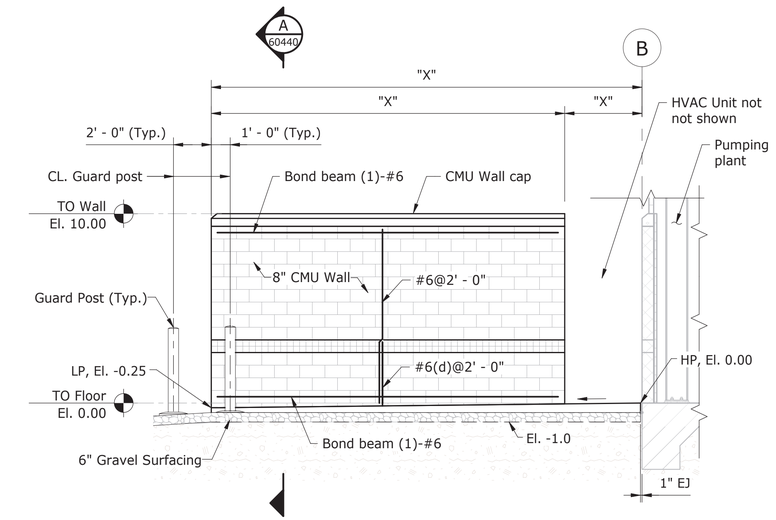

B SECTION
Scale: 1/4" = 1'-0"

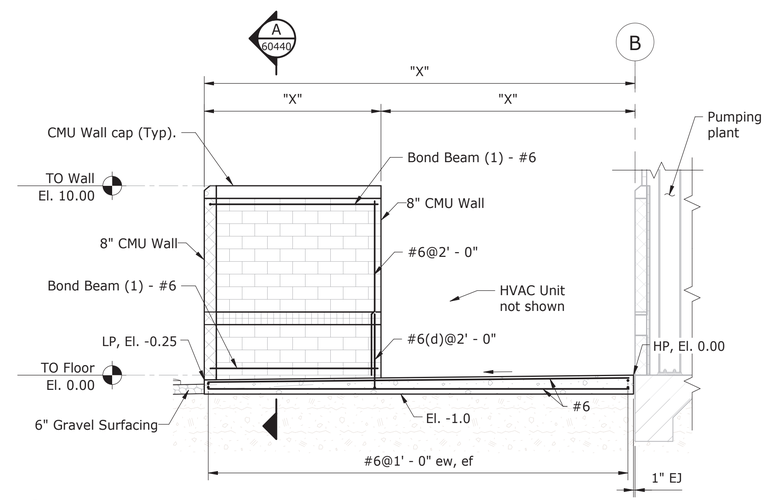

C SECTION
Scale: 1/4" = 1'-0"

PUMPING PLANT	DATUM (FT)
PUMPING PLANT NO. 4	EL. 5867.50
PUMPING PLANT NO. 7	EL. 6215.00

NOTES:
1. All elevations are based on NAVD88 vertical datum.
2. The datum elevation(s) identified in the table correspond to the El. 0.0 elevation identified on the drawing. All elevations reported on the drawings are relative to the El. 0.0 elevation unless noted otherwise.

0 2' 4' 8'
Scale: 1/4" = 1'-0"

NOTES

1. For Structural Design Data and Loads, see (60399) and (60400).
2. For Drawing Index, see (60396) and (60397).
3. For concrete outline general notes, see (60414).
4. For reinforcement design general notes, see (60418).
5. For masonry design general notes and typical details, see (60422).
6. For locations of Pumping Plant No. 4 features, see (60403).
7. For locations of Pumping Plant No. 7 features, see (60406).
8. For excavation and backfill requirements, see (60410).
9. Government determines "X" dimension after reciept of approved Contractor-furnished drawings and data for the electrical and mechanical equipment.
10. All guard posts are Type I, see 40-D-60002.

RECLAMATION
Managing Water in the West

ALWAYS THINK **SAFETY**

U.S. DEPARTMENT OF THE INTERIOR
BUREAU OF RECLAMATION
NAVAJO-GALLUP WATER SUPPLY PROJECT
NEW MEXICO

SAN JUAN LATERAL
PUMPING PLANT NOS. 4 AND 7

Justin Dorough
DESIGNED
Kevin O'Shea
DRAWN
Brandon Jackson
CHECKED
TECH. APPR. Kevin O'Shea, P.E.
APPROVED Alfred I. Bernstein
Peer Reviewer - Plant Structures Group

DENVER, CO 2020-01-24

EQUIPMENT FOUNDATION AND ENCLOSURE

HVAC UNITS

1695-D-60440

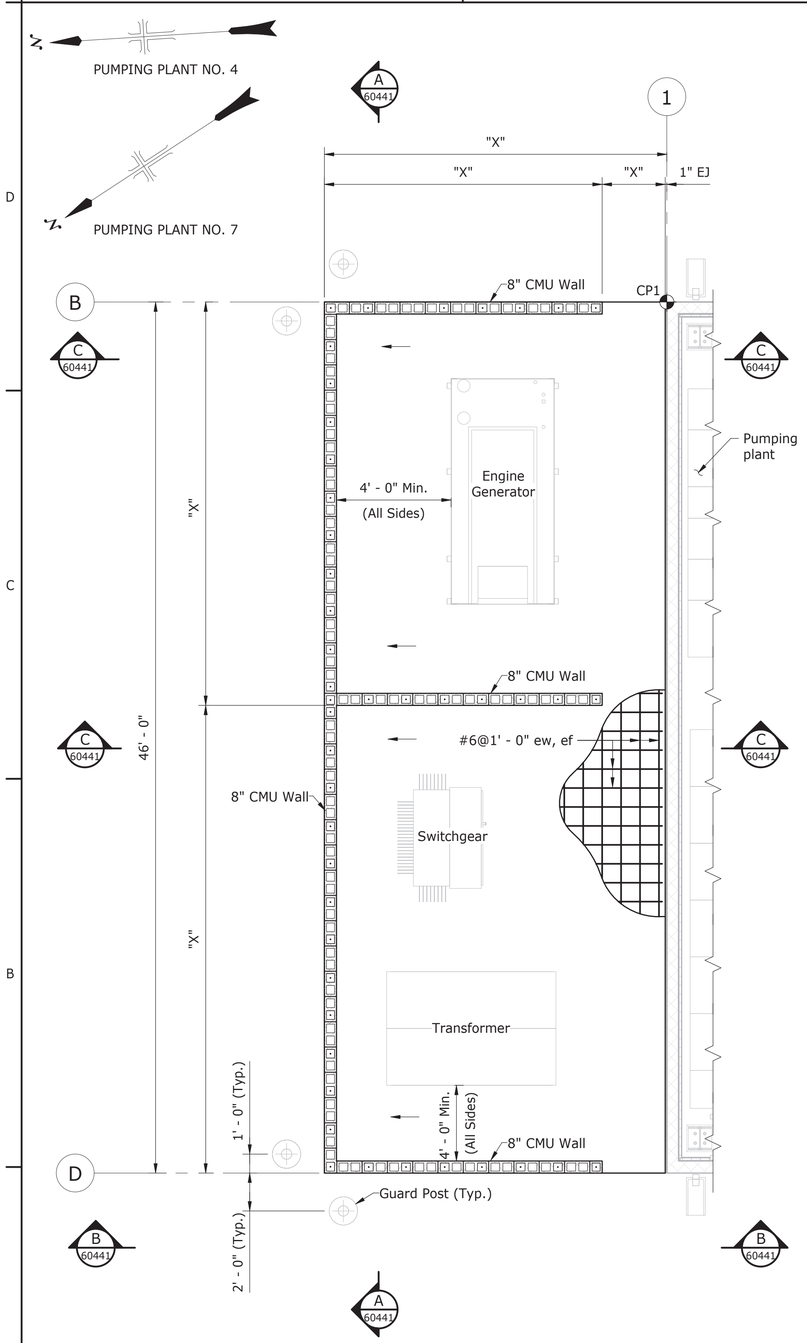

PLAN
Scale: 1/4" = 1'-0"

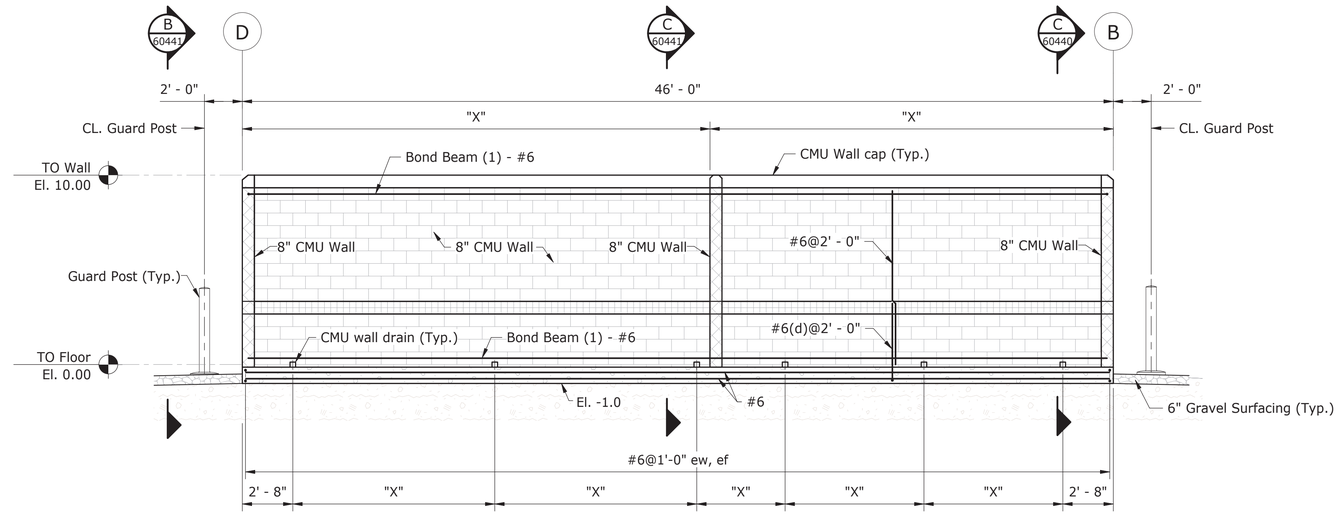

A SECTION
Scale: 1/4" = 1'-0"

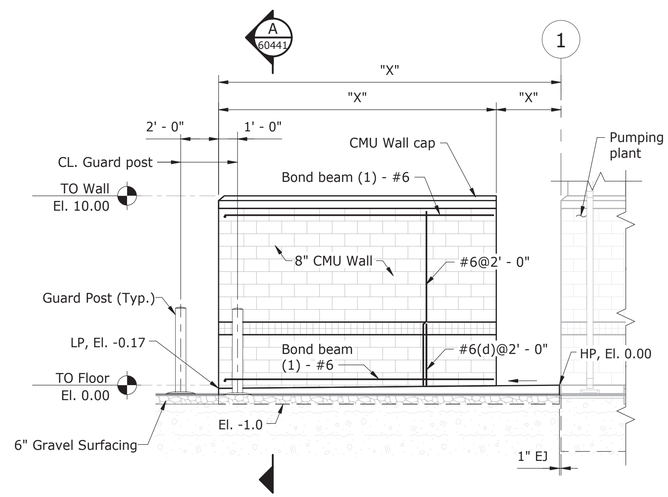

B SECTION
Scale: 1/4" = 1'-0"

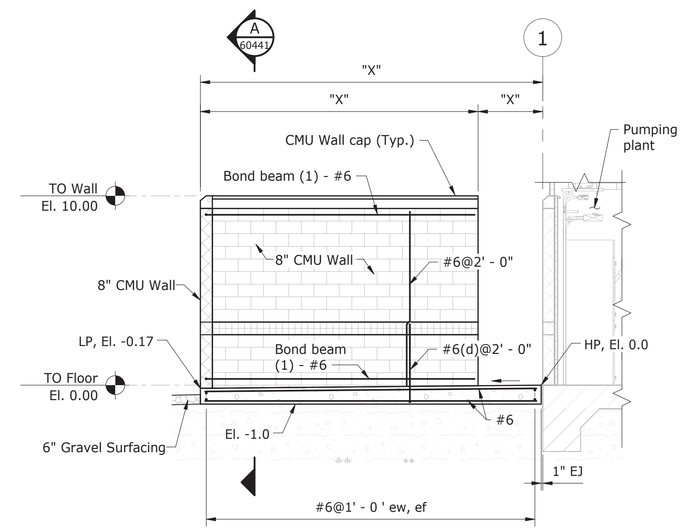

C SECTION
Scale: 1/4" = 1'-0"

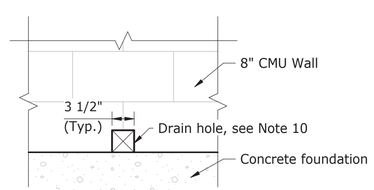

TYPICAL CMU WALL DRAIN
(NTS)

PUMPING PLANT	DATUM (FT)
PUMPING PLANT NO. 4	EL. 5867.50
PUMPING PLANT NO. 7	EL. 6215.00

NOTES:
1. All elevations are based on NAVD88 vertical datum.
2. The datum elevation(s) identified in the table correspond to the El. 0.0 elevation identified on the drawing. All elevations reported on the drawings are relative to the El. 0.0 elevation unless noted otherwise.

0 2' 4' 8'
Scale: 1/4" = 1'-0"

NOTES

1. For Structural Design Data and Loads, see (60399) and (60400).
2. For Drawing Index, see (60396) and (60397).
3. For concrete outline general notes, see (60414).
4. For reinforcement design general notes, see (60418).
5. For masonry design general notes and typical details, see (60422).
6. For locations of Pumping Plant No. 4 features, see (60403).
7. For locations of Pumping Plant No. 7 features, see (60406).
8. For excavation and backfill requirements, see (60410).
9. Government determines "X" dimension after reciept of approved Contractor-furnished drawings and data for the electrical and mechanical equipment.
10. Modify base course CMU block and form as required to maintain void for drainage.
11. All guard posts are Type I, see 40-D-60002.

RECLAMATION
Managing Water in the West

ALWAYS THINK SAFETY

U.S. DEPARTMENT OF THE INTERIOR
BUREAU OF RECLAMATION
NAVAJO-GALLUP WATER SUPPLY PROJECT
NEW MEXICO

SAN JUAN LATERAL
PUMPING PLANT NOS. 4 AND 7

Justin Dorough
DESIGNED
Kevin O'Shea
DRAWN
Brandon Jackson
CHECKED
TECH. APPR. Kevin O'Shea, P.E.
APPROVED Alfred I. Bernstein
Peer Reviewer - Plant Structures Group

DENVER, CO 2020-01-24

EQUIPMENT FOUNDATION AND ENCLOSURE

ENGINE-GENERATOR SET AND SWITCHGEAR

1695-D-60441

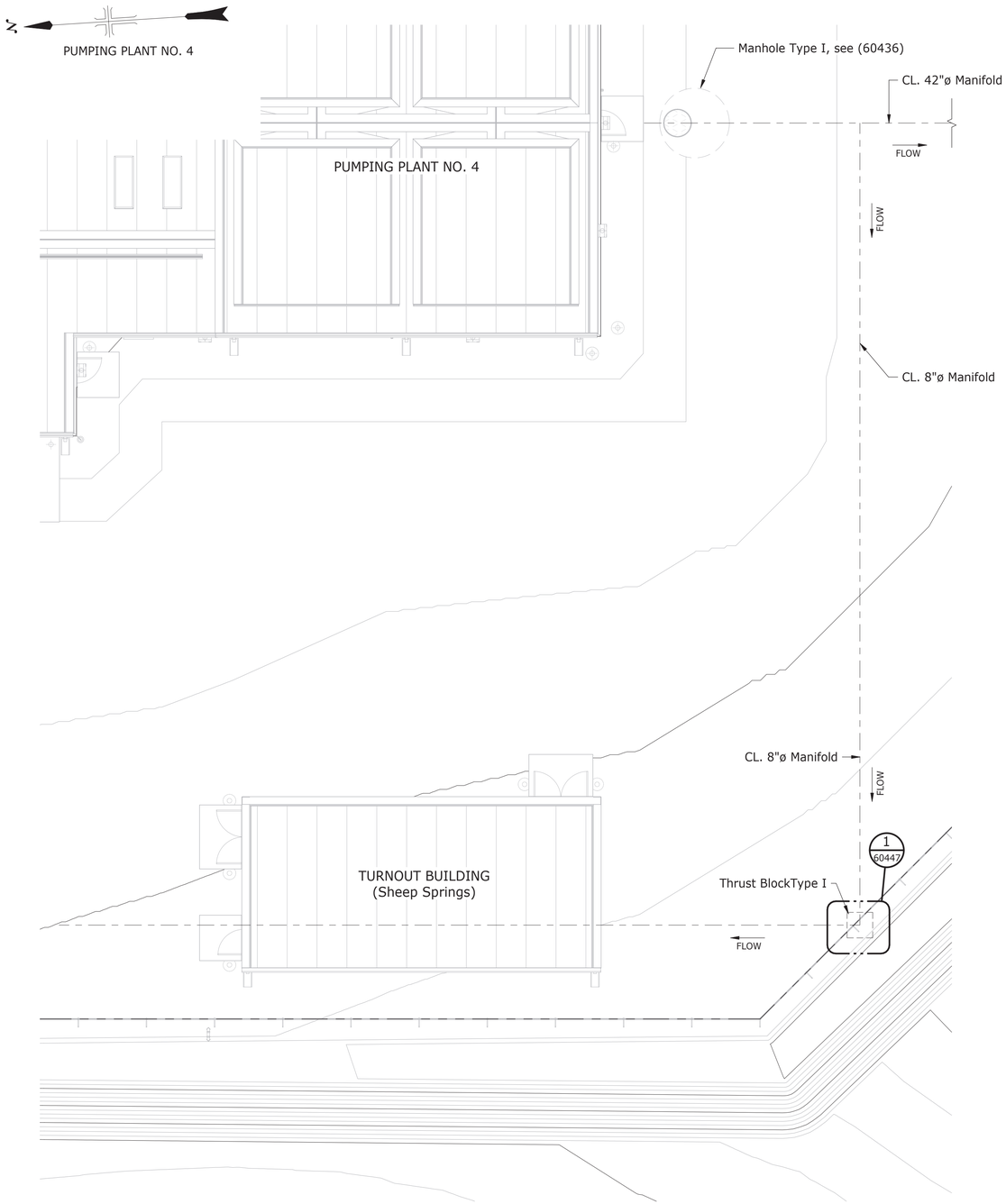

PARTIAL LOCATION PLAN - THRUST BLOCK

Scale: 1/8" = 1'-0"

PUMPING PLANT	DATUM (FT)
PUMPING PLANT NO. 4	EL. 5867.50

NOTES:
1. All elevations are based on NAVD88 vertical datum.
2. The datum elevation(s) identified in the table correspond to the El. 0.0 elevation identified on the drawings. All elevations reported on the drawings are relative to the El. 0.0 elevation unless noted otherwise.

0 4' 8' 16'
Scale: 1/8" = 1'-0"

NOTES

1. For Structural Design Data and Loads, see (60399) and (60400).
2. For locations of Pumping Plant No. 4 features, see (60403).
3. For Concrete General Notes, see (60414).
4. For Reinforcement Design General Notes, see (60418)
5. For Drawing Index, see (60396).

RECLAMATION
Managing Water in the West

ALWAYS THINK **SAFETY**

U.S. DEPARTMENT OF THE INTERIOR
BUREAU OF RECLAMATION
NAVAJO-GALLUP WATER SUPPLY PROJECT
NEW MEXICO
SAN JUAN LATERAL
PUMPING PLANT NOS. 4 AND 7

Amy Young
DESIGNED
Amy Young
DRAWN
Sara Putnam
CHECKED
TECH. APPR. Kevin O'Shea, P.E.
APPROVED Alfred I. Bernstein
Peer Reviewer - Plant Structures Group

DENVER, CO 2020-01-24

PUMPING PLANT NO. 4 BURIED THRUST BLOCK

PARTIAL PLAN

1695-D-60446

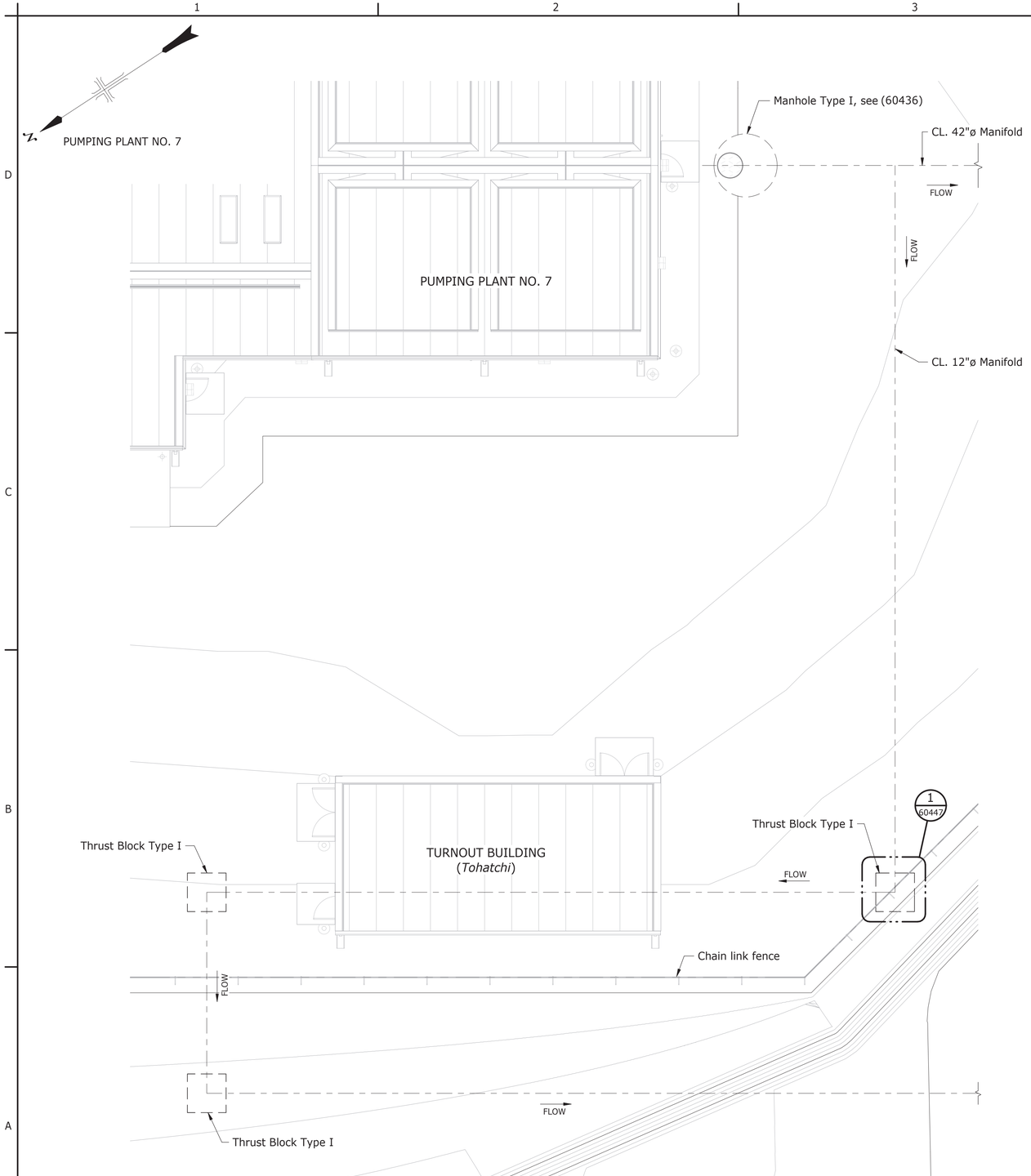

PARTIAL LOCATION PLAN - THRUST BLOCKS

Scale: 1/8" = 1'-0"

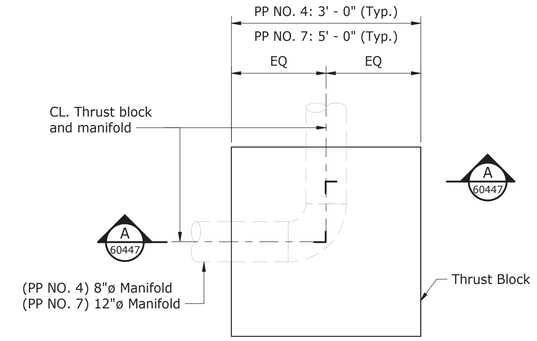

1 PLAN - THRUST BLOCK TYPE I

Scale: 1/2" = 1'-0"

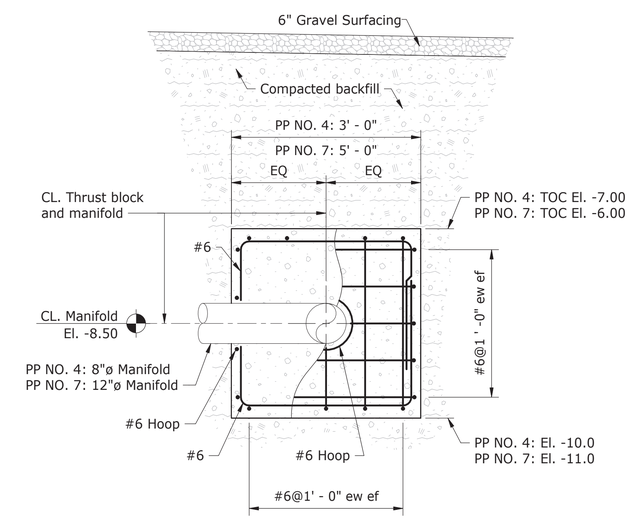

A SECTION

Scale: 1/2" = 1'-0"

PUMPING PLANT	DATUM (FT)
PUMPING PLANT NO. 7	EL. 6215.00

NOTES:
1. All elevations are based on NAVD88 vertical datum.
2. The datum elevation(s) identified in the table correspond to the El. 0.0 elevation identified on the drawing. All elevations reported on the drawings are relative to the El. 0.0 elevation unless noted otherwise.

NOTES

1. For Structural Design Data and Loads, see (60399) and (60400).
2. For locations of Pumping Plant No. 7 features, see (60406).
3. For Concrete General Notes, see (60414).
4. For Reinforcement Design General Notes, see (60418).
5. For Drawing Index, see (60396) and (60397).

0 4' 8' 16'
Scale: 1/8" = 1'-0"

0 1' 2' 4'
Scale: 1/2" = 1'-0"

RECLAMATION
Managing Water in the West

ALWAYS THINK **SAFETY**

U.S. DEPARTMENT OF THE INTERIOR
BUREAU OF RECLAMATION
NAVAJO-GALLUP WATER SUPPLY PROJECT
NEW MEXICO

SAN JUAN LATERAL
PUMPING PLANT NOS. 4 AND 7

Kevin O'Shea
DESIGNED
Kevin O'Shea
DRAWN
Sara Putnam
CHECKED
TECH. APPR. Brandon Jackson, P.E.
APPROVED Alfred I. Bernstein
Peer Reviewer - Plant Structures Group

DENVER, CO 2020-01-24

PUMPING PLANT NOS. 4 AND 7 BURIED THRUST BLOCKS

CONCRETE OUTLINE AND REINFORCEMENT DESIGN

1695-D-60447

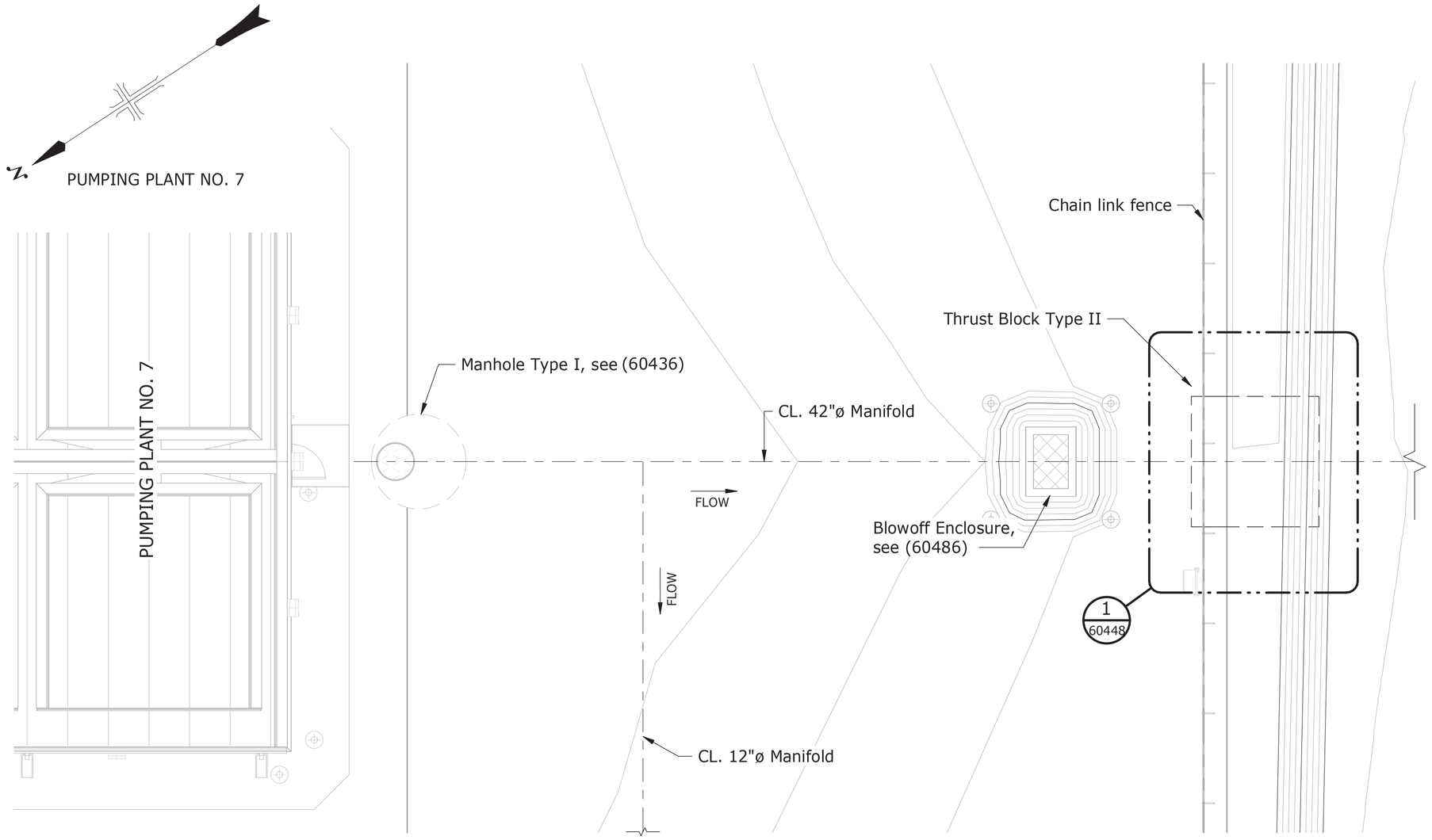

PARTIAL LOCATION PLAN - THRUST BLOCKS

Scale: 1/8" = 1'-0"

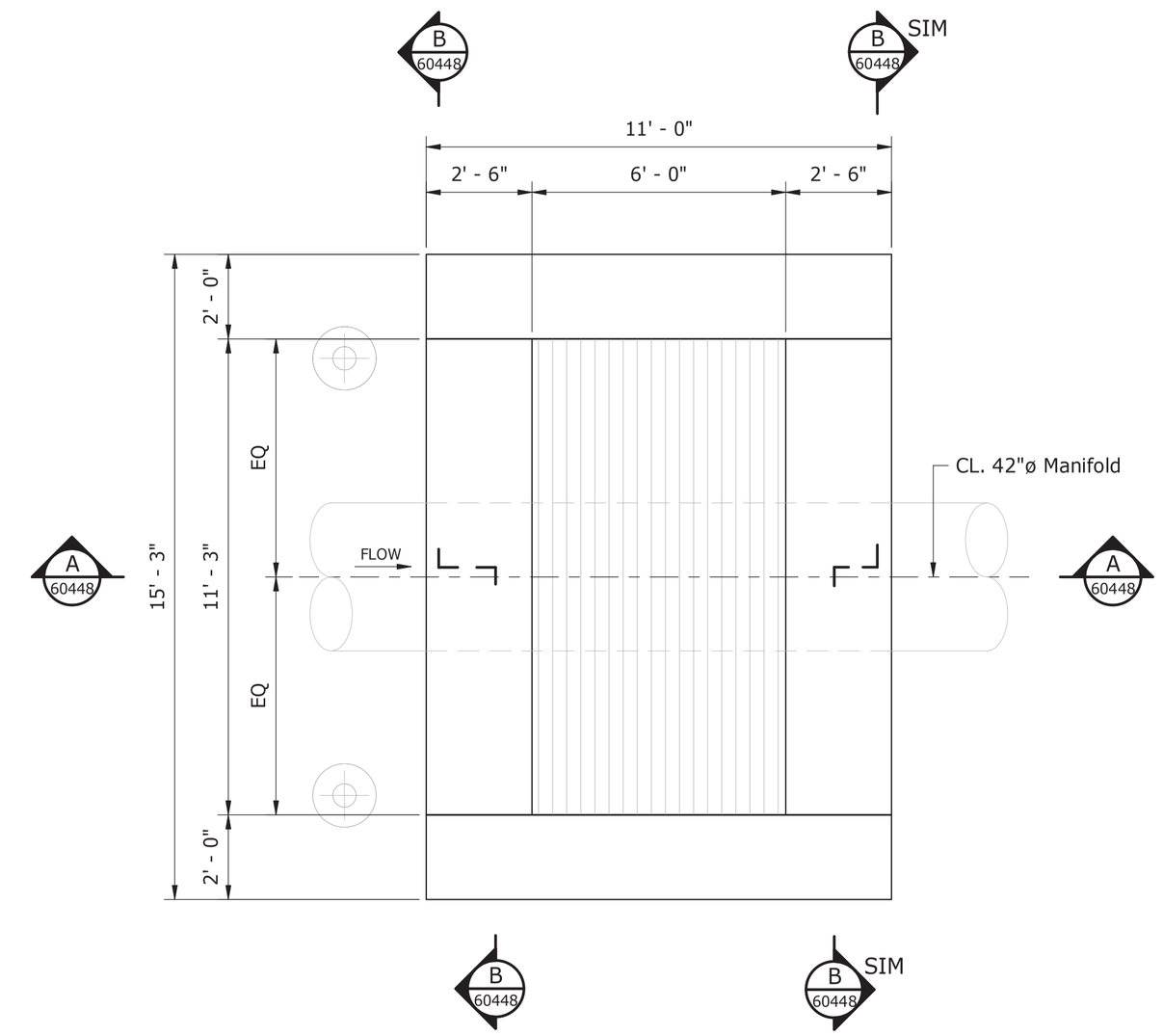

1 60448 PLAN - THRUST BLOCK TYPE II

Scale: 3/8" = 1'-0"

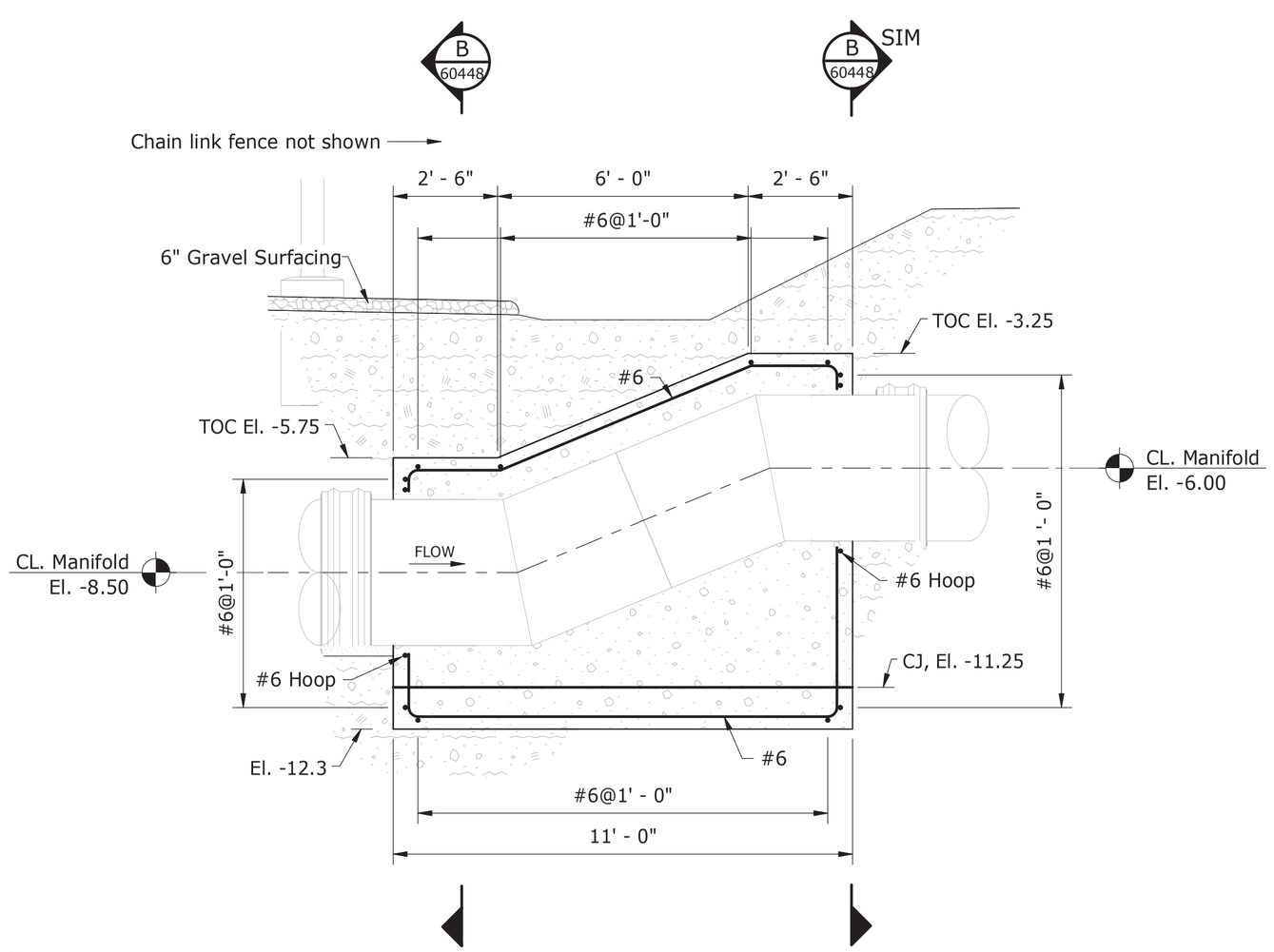

A 60448 SECTION

Scale: 3/8" = 1'-0"

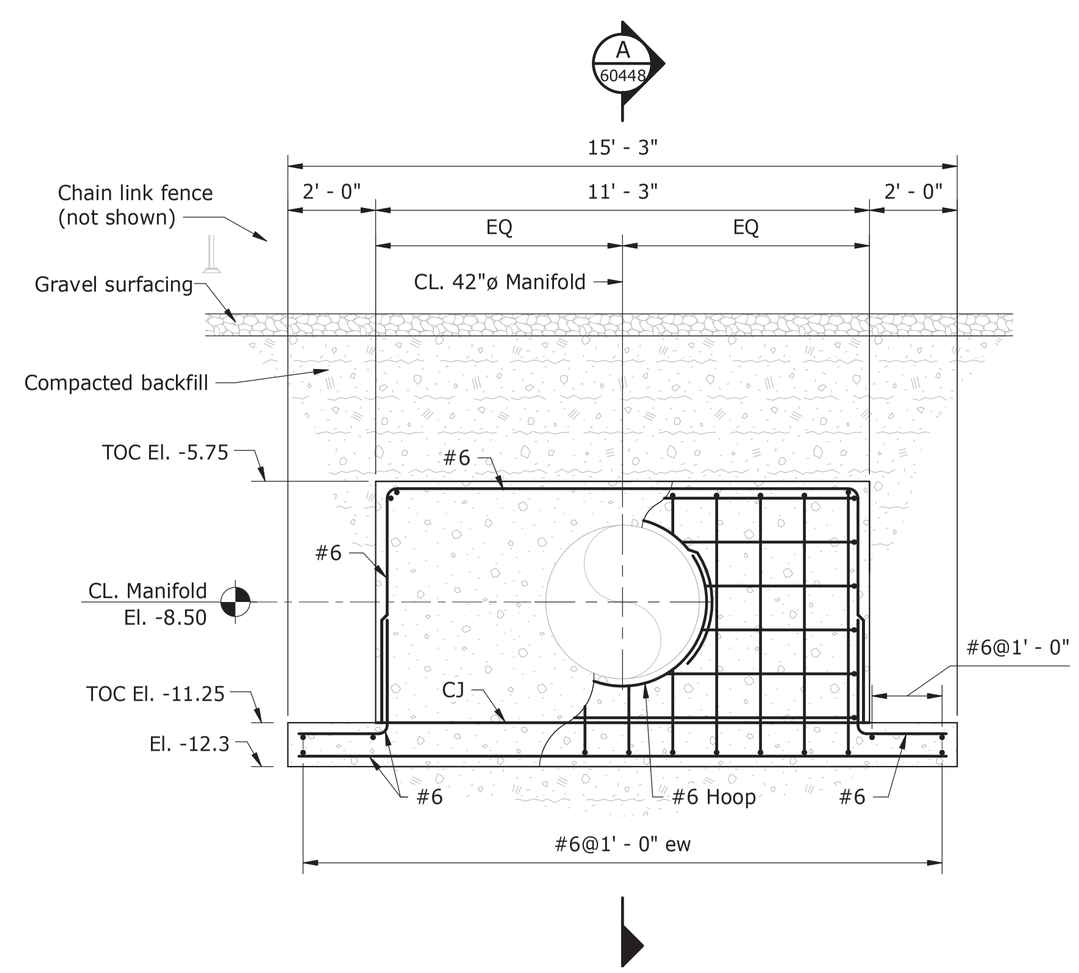

B 60448 SECTION

Scale: 3/8" = 1'-0"

PUMPING PLANT	DATUM (FT)
PUMPING PLANT NO. 7	EL. 6215.00

NOTES:
1. All elevations are based on NAVD88 vertical datum.
2. The datum elevation(s) identified in the table correspond to the El. 0.0 elevation identified on the drawing. All elevations reported on the drawings are relative to the El. 0.0 elevation unless noted otherwise.

NOTES

1. For Structural Design Data and Loads, see (60399) and (60400).
2. For locations of Pumping Plant No. 7 features, see (60406).
3. For Concrete General Notes, see (60414).
4. For Reinforcement Design General Notes, see (60418).
5. For Drawing Index, see (60396) and (60397).

0 4' 8' 16'
Scale: 1/8" = 1'-0"

0 2' 4' 6'
Scale: 3/8" = 1'-0"

RECLAMATION
Managing Water in the West

ALWAYS THINK **SAFETY**

U.S. DEPARTMENT OF THE INTERIOR
BUREAU OF RECLAMATION
NAVAJO-GALLUP WATER SUPPLY PROJECT
NEW MEXICO

SAN JUAN LATERAL
PUMPING PLANT NOS. 4 AND 7

Amy Young
DESIGNED
Amy Young
DRAWN
Sara Putnam
CHECKED
TECH. APPR. Kevin O'Shea, P.E.
APPROVED Alfred I. Bernstein
Peer Reviewer - Plant Structures Group

DENVER, CO 2020-01-24

PUMPING PLANT NO. 7 BURIED THRUST BLOCKS

CONCRETE OUTLINE AND REINFORCEMENT DESIGN

1695-D-60448

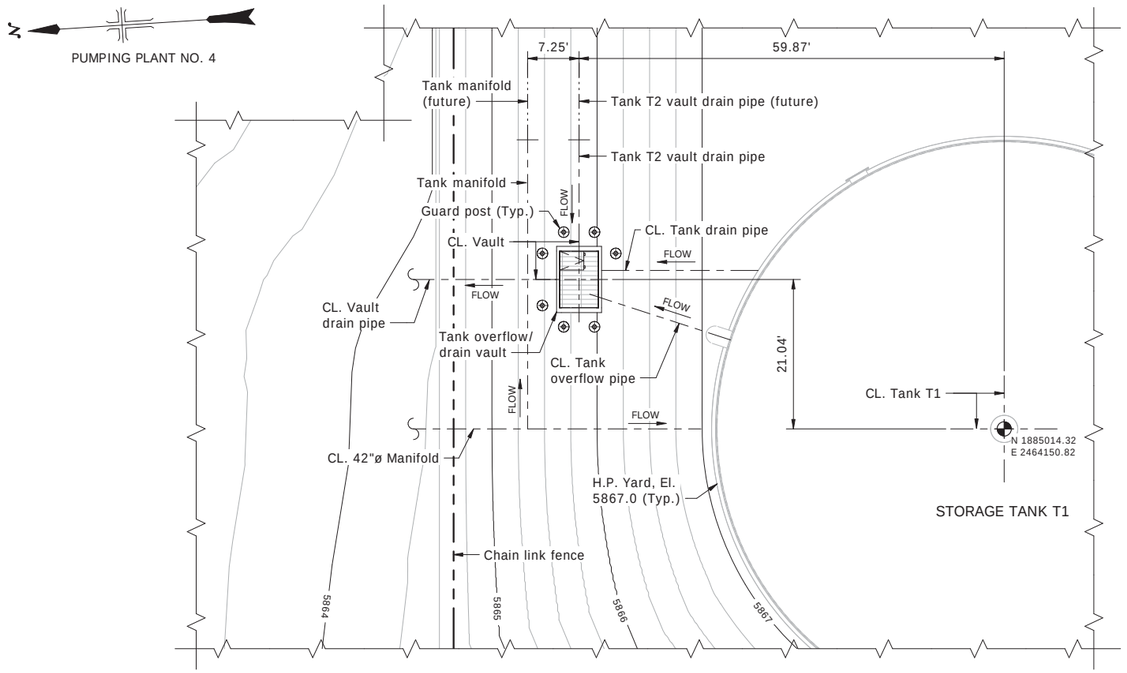

PARTIAL LOCATION PLAN - TANK OVERFLOW AND DRAIN VAULT

Scale: 3/32" = 1'-0"

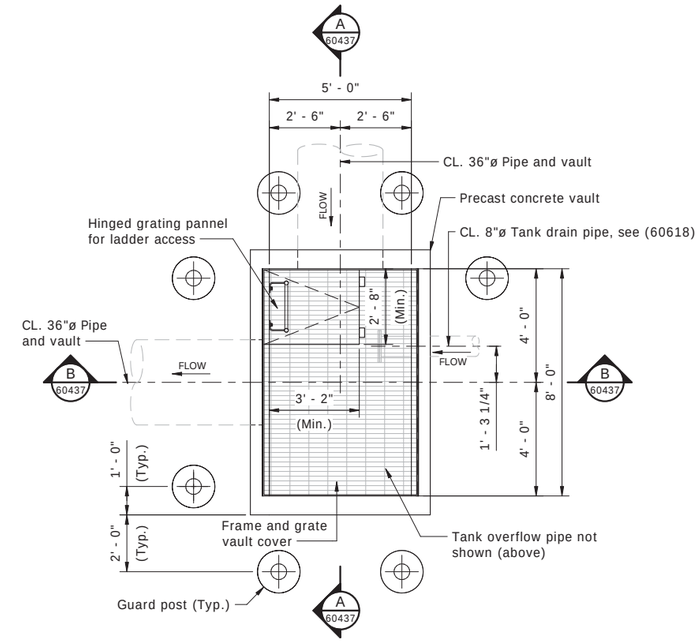

PLAN - TANK OVERFLOW AND DRAIN VAULT

Scale: 3/8" = 1'-0"

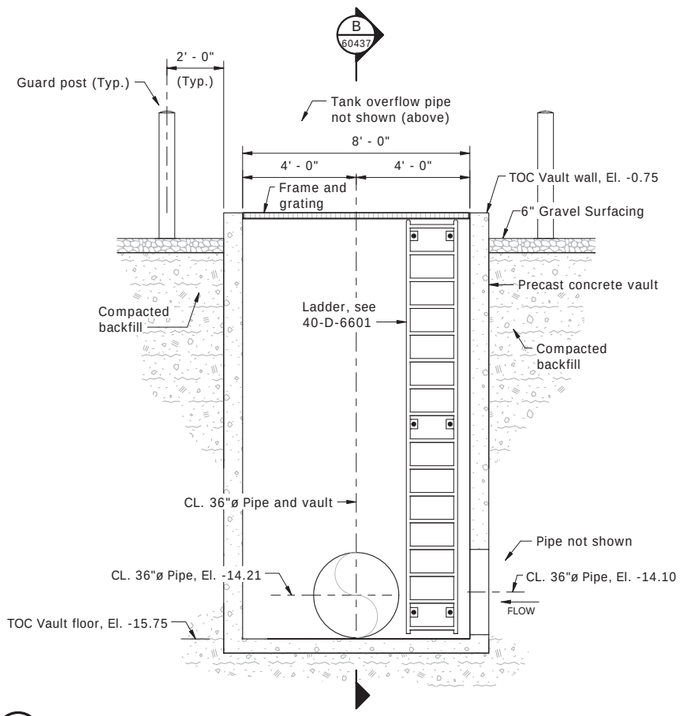

A SECTION

Scale: 3/8" = 1'-0"

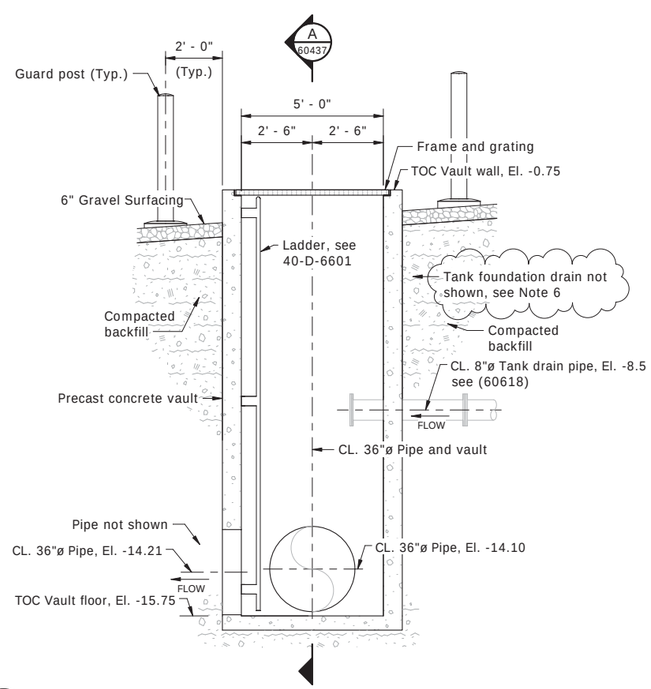

B SECTION

Scale: 3/8" = 1'-0"

PUMPING PLANT	DATUM (FT)
PUMPING PLANT NO. 4	EL. 5867.50

NOTES:
1. All elevations are based on NAVD88 vertical datum.
2. The datum elevation(s) identified in the table correspond to the El. 0.0 elevation identified on the drawing. All elevations reported on the drawings are relative to the El. 0.0 elevation unless noted otherwise.

NOTES

1. For Structural Design Data and Loads, see (60399) and (60400).
2. For locations of Pumping Plant No. 4 features, see (60403).
3. For Drawing Index, see (60396) and (60397).
4. For excavation and backfill requirements, see (60410).
5. All guard posts are Type I, see 40-D-60002.
6. Tank foundation drain is not shown and is required for all tank options, see Specifications and drawing (60442). When applicable, coordinate the location of and provide any required wall pepetrations needed to connect the foundation drain pipe to the precast concrete tank overflow and drain vault.

0 2' 4' 6' Scale: 3/8" = 1'-0"

0 10' 20' Scale: 3/32" = 1'-0"

RECLAMATION
Managing Water in the West

ALWAYS THINK SAFETY

U.S. DEPARTMENT OF THE INTERIOR
BUREAU OF RECLAMATION
NAVAJO-GALLUP WATER SUPPLY PROJECT
NEW MEXICO

SAN JUAN LATERAL
PUMPING PLANT NOS. 4 AND 7

REV NO 1 | STA. D | 2020-06-19 Kevin O'Shea, P.E. | Revised Note 6

Sara Putnam
DESIGNED
Sara Putnam
DRAWN
Kevin O'Shea
CHECKED
Kevin O'Shea, P.E.
TECH. APPR. Kevin O'Shea, P.E.
Alfred I. Bernstein
APPROVED Alfred I. Bernstein
Peer Reviewer - Plant Structures Group

DENVER, CO 2020-01-24

PUMPING PLANT NO. 4
PRECAST CONCRETE
TANK OVERFLOW AND
DRAIN VAULT

PLAN AND SECTIONS

1695-D-60437

RECLAMATION
Managing Water in the West

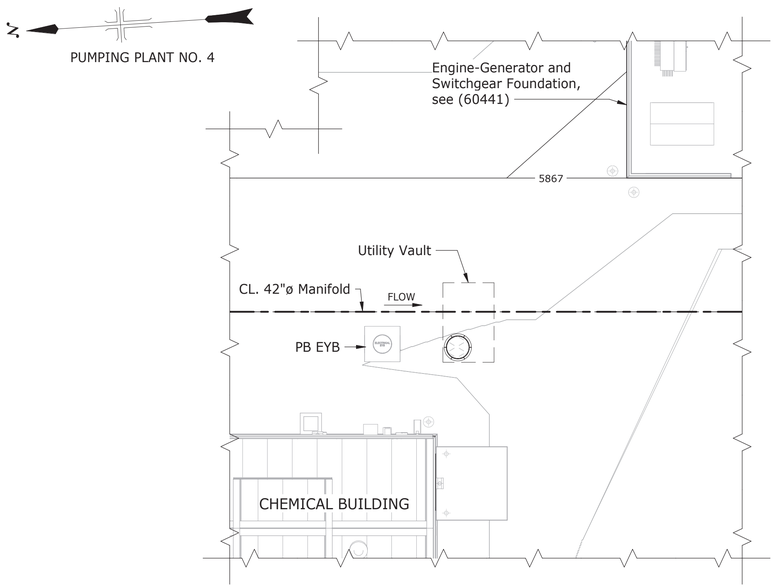

PARTIAL LOCATION PLAN - UTILITY VAULT
Scale: 3/32" = 1'-0"

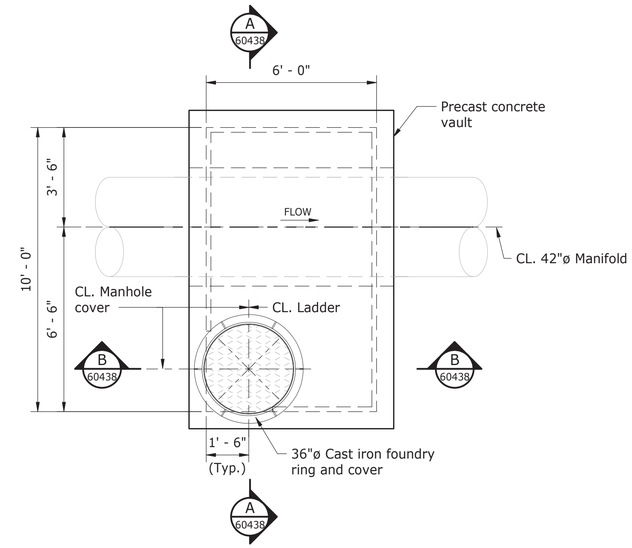

ROOF PLAN - UTILITY VAULT
Scale: 3/8" = 1'-0"

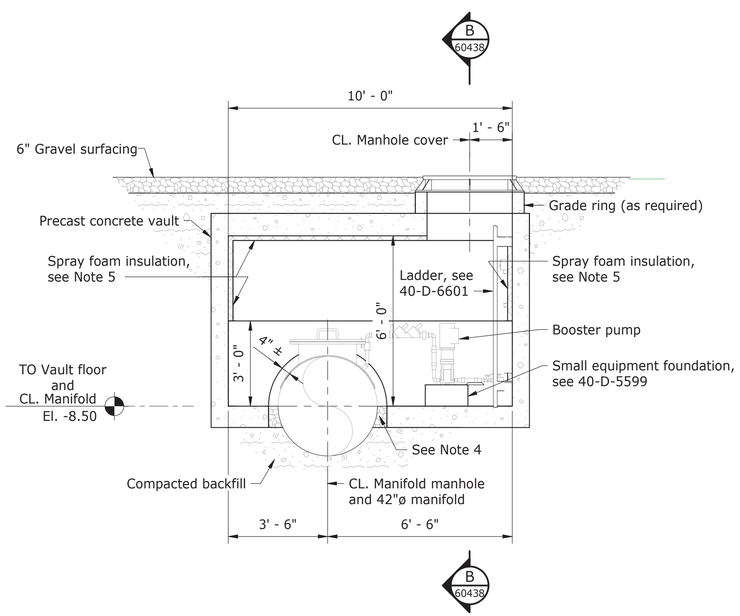

A SECTION
Scale: 3/8" = 1'-0"

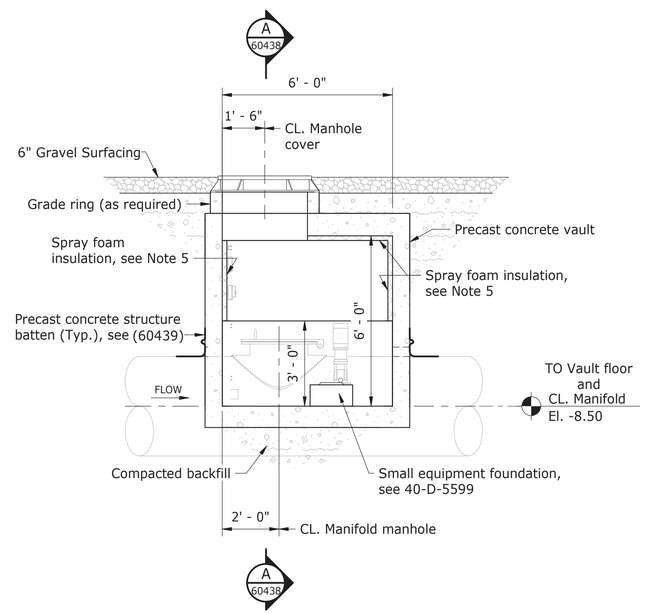

B SECTION
Scale: 3/8" = 1'-0"

PUMPING PLANT	DATUM (FT)
PUMPING PLANT NO. 4	EL. 5867.50

NOTES:
1. All elevations are based on NAVD88 vertical datum.
2. The datum elevation(s) identified in the table correspond to the El. 0.0 elevation identified on the drawing. All elevations reported on the drawings are relative to the El. 0.0 elevation unless noted otherwise.

NOTES

1. For Drawing Index, see (60396) and (60397).
2. For Structural Design Data and Loads, see (60399) and (60400).
3. For locations of Pumping Plant No. 4 features, see (60403).
4. After installation of the vault, fill the void space between the manifold and precast concrete vault with gravel surfacing as shown on the drawings.
5. Apply spray foam insulation to the interior face of the precast concrete structure roof and walls to depth shown on drawings. Insulation shall be of sufficient thickness to provide an R-Value of 7.5≤R≤9. Omit spray foam insulation around ladder(s) and other wall-mounted electrical and mechanical equipment as directed by the COR.
6. For excavation and backfill requirements, see (60410).
7. Structure penetrations 12 inches in diameter and larger are shown. Smaller diameter penetrations may or may not be shown. Coordinate with applicable electrical and mechanical drawings.

0 10' 20' Scale: 3/32" = 1'-0"

0 2' 4' 6' Scale: 3/8" = 1'-0"

ALWAYS THINK **SAFETY**

U.S. DEPARTMENT OF THE INTERIOR
BUREAU OF RECLAMATION
NAVAJO-GALLUP WATER SUPPLY PROJECT
NEW MEXICO

SAN JUAN LATERAL
PUMPING PLANT NOS. 4 AND 7

Kevin O'Shea
DESIGNED
Kevin O'Shea
DRAWN
Sara Putnam
CHECKED
TECH. APPR. Brandon Jackson, P.E.
APPROVED Alfred I. Bernstein
Peer Reviewer - Plant Structures Group

DENVER, CO 2020-01-24

PUMPING PLANT NO. 4 PRECAST CONCRETE UTILITY VAULT

PLAN AND SECTIONS

1695-D-60438

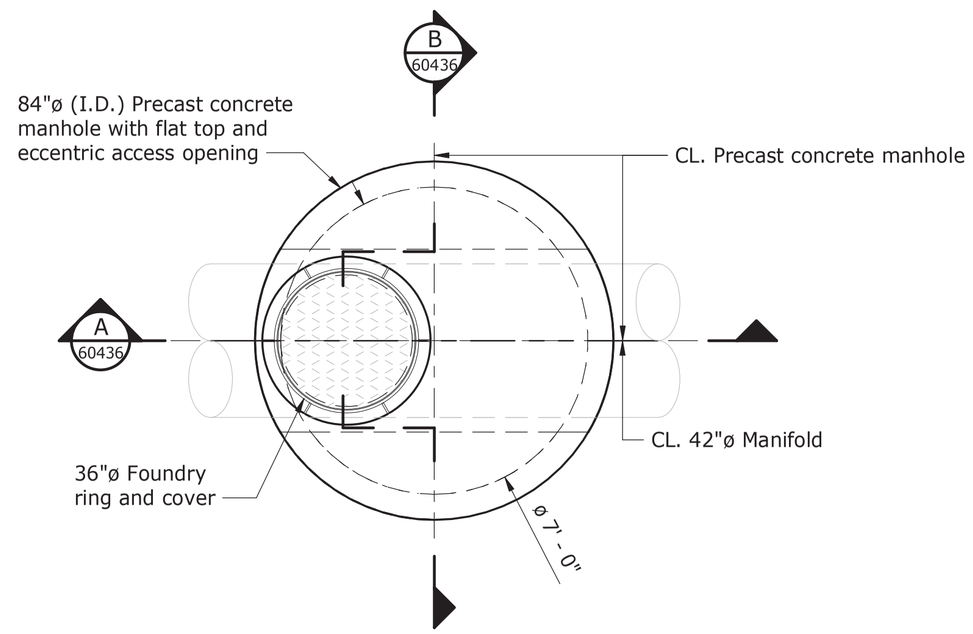

ROOF PLAN - MANHOLE TYPE I

Scale: 3/8" = 1'-0"

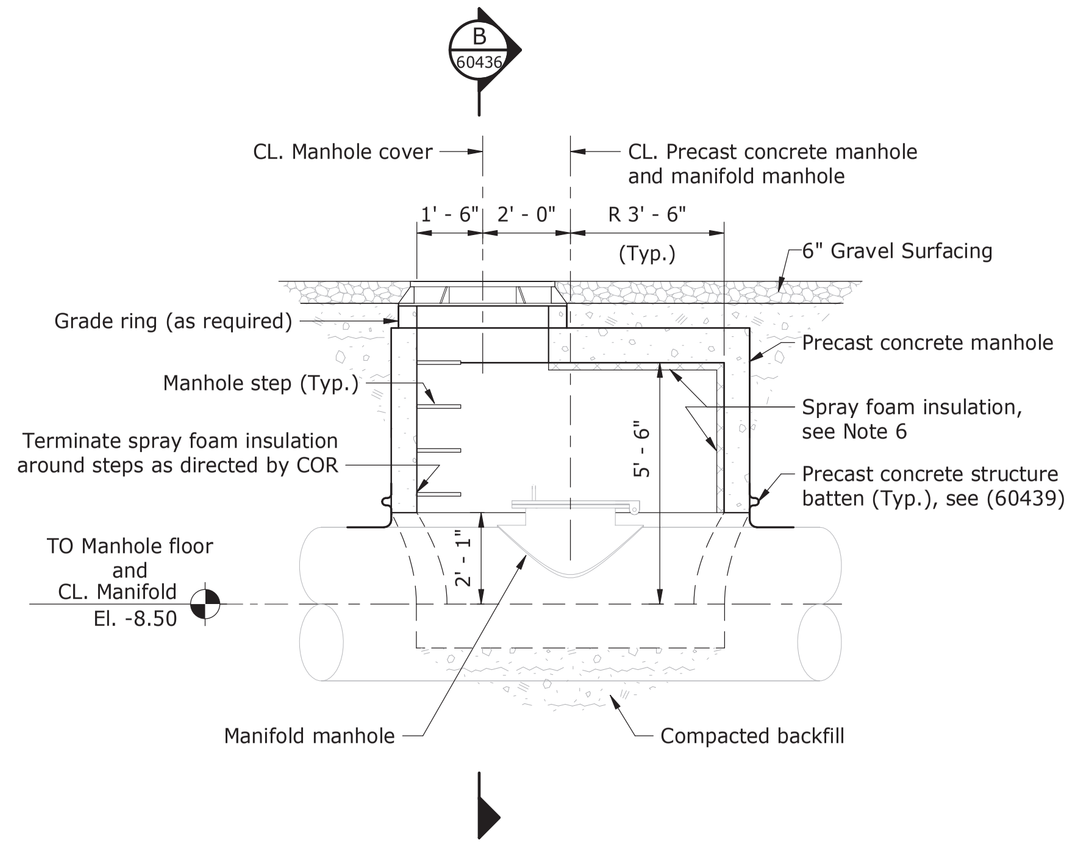

A 60436 SECTION

Scale: 3/8" = 1'-0"

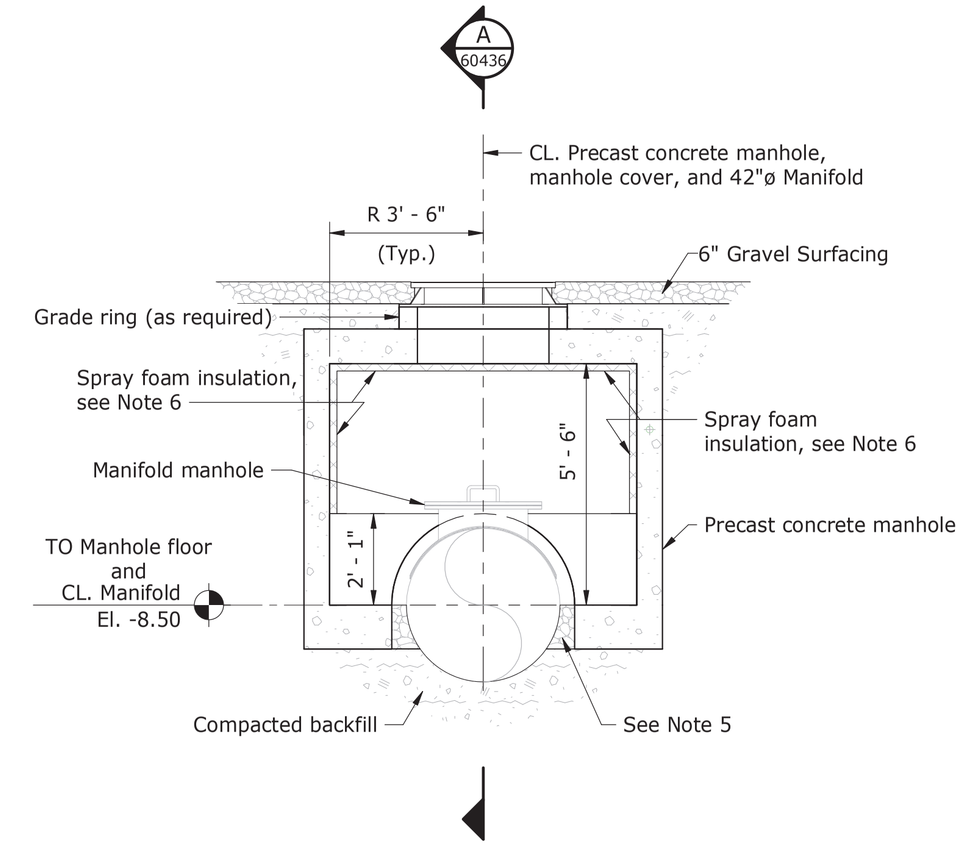

B 60436 SECTION

Scale: 3/8" = 1'-0"

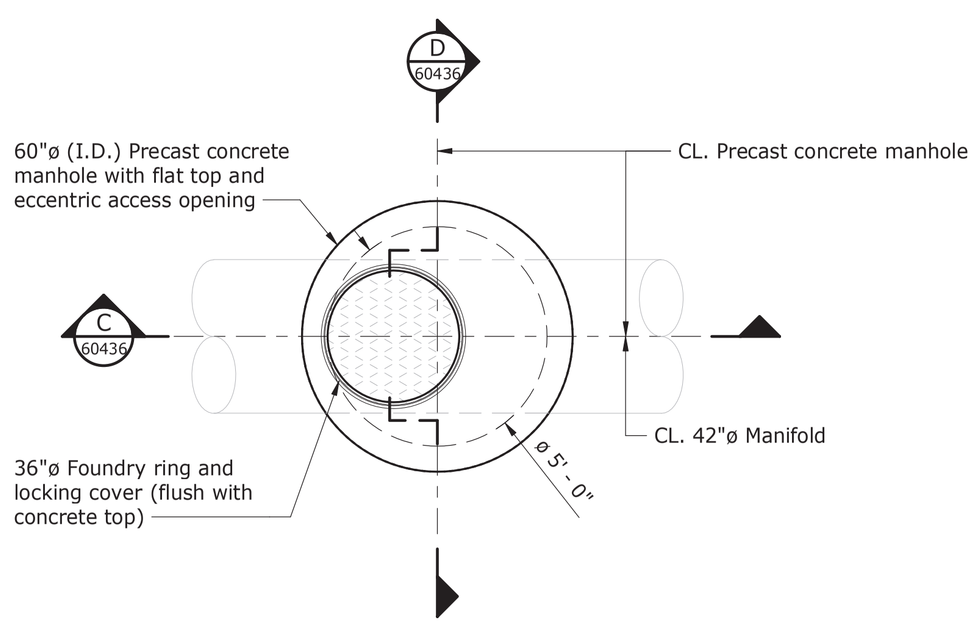

ROOF PLAN - MANHOLE TYPE II

Scale: 3/8" = 1'-0"

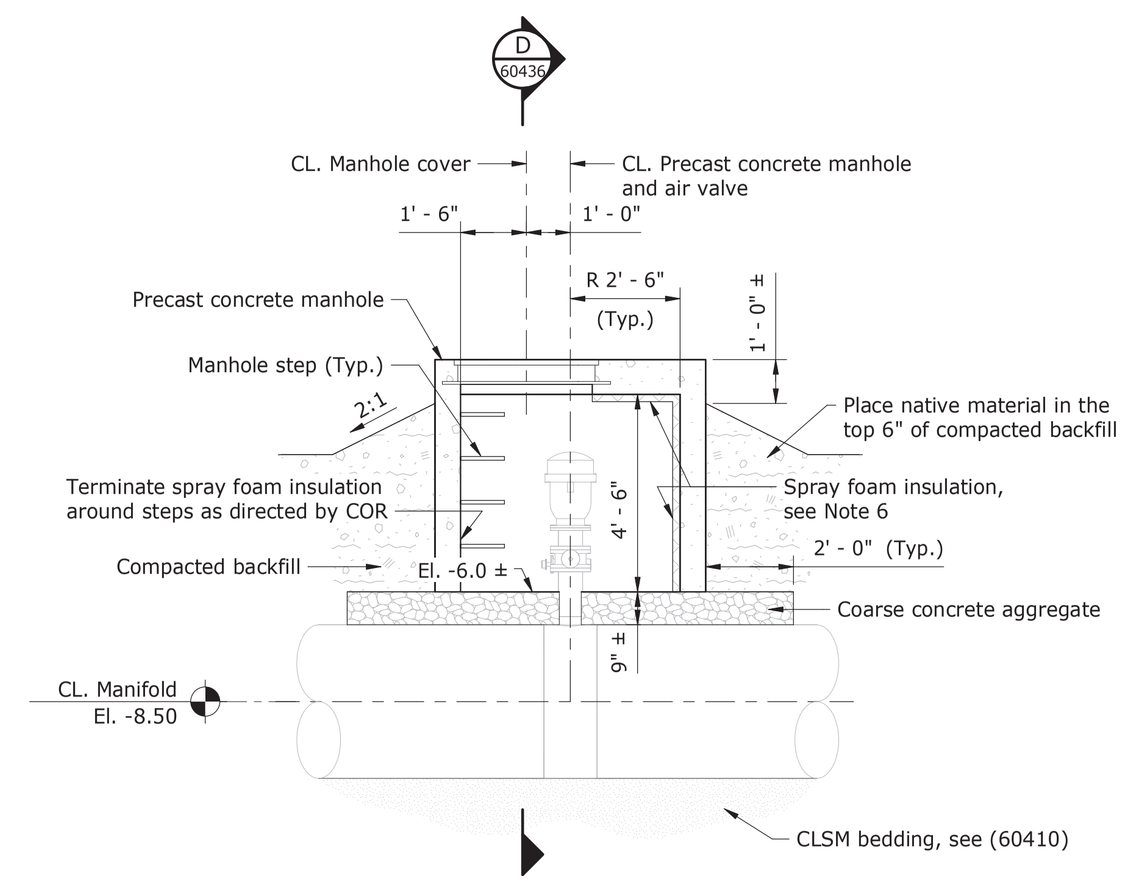

C 60436 SECTION

Scale: 3/8" = 1'-0"

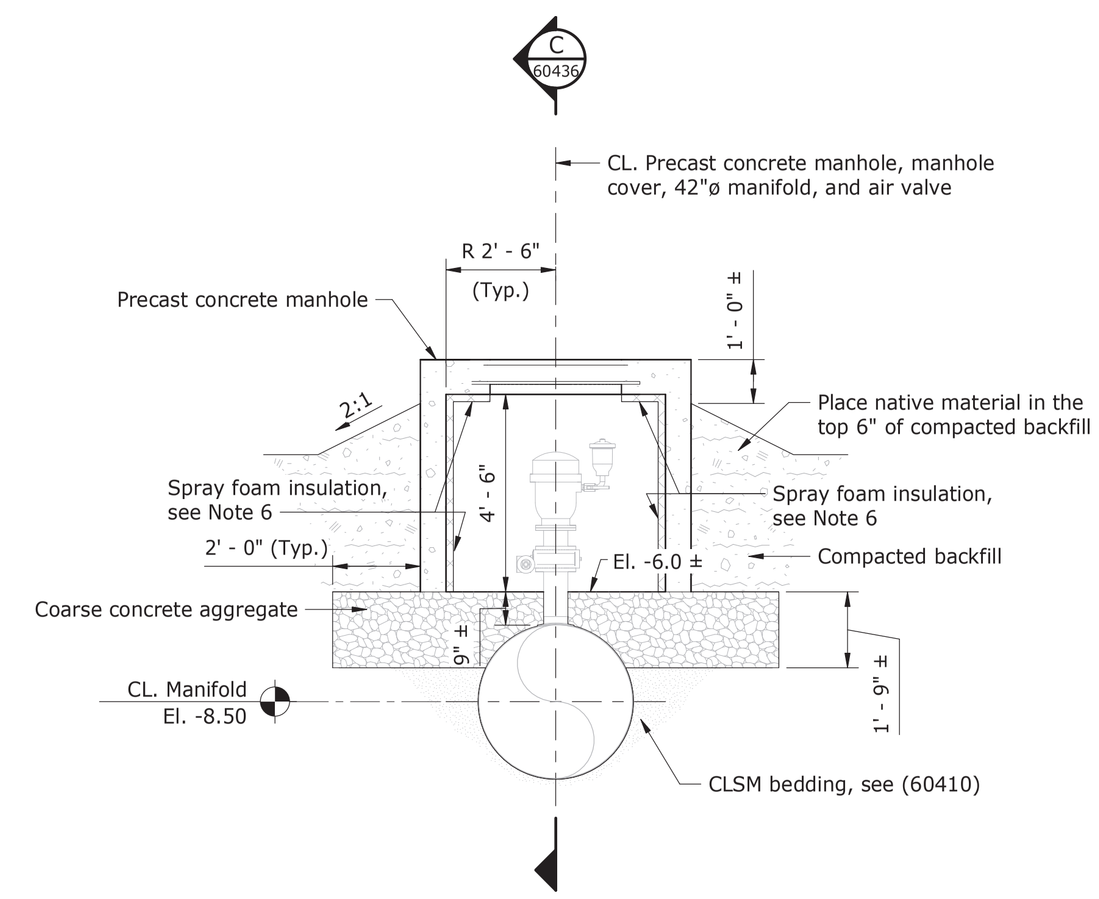

D 60436 SECTION

Scale: 3/8" = 1'-0"

PUMPING PLANT	DATUM (FT)
PUMPING PLANT NO. 4	EL. 5867.50
PUMPING PLANT NO. 7	EL. 6215.00

NOTES:
1. All elevations are based on NAVD88 vertical datum.
2. The datum elevation(s) identified in the table correspond to the El. 0.0 elevation identified on the drawing. All elevations reported on the drawings are relative to the El. 0.0 elevation unless noted otherwise.

0 2' 4' 6'
Scale: 3/8" = 1'-0"

NOTES

1. For Structural Design Data and Loads, see (60399) and (60400).
2. For locations of Pumping Plant No. 4 features, see (60403).
3. For locations of Pumping Plant No. 7 features, see (60406).
4. For Drawing Index, see (60396) and (60397).
5. After installation of manhole, fill the void space between the manifold and precast concrete structure with gravel surfacing as shown on the drawings.
6. Apply spray foam insulation to the interior face of the precast concrete structure roof and walls to depth shown on drawings. Insulation shall be of sufficient thickness to provide an R-Value of 7.5≤R≤9. Omit spray foam insulation around ladder(s) and other wall-mounted electrical and mechanical equipment as directed by the COR.
7. For excavation and backfill requirements, see (60410).
8. Structure penetrations 12 inches in diameter and larger are shown. Smaller diameter penetrations may or may not be shown. Coordinate with applicable electrical and mechanical drawings.

RECLAMATION
Managing Water in the West

ALWAYS THINK SAFETY

U.S. DEPARTMENT OF THE INTERIOR
BUREAU OF RECLAMATION
NAVAJO-GALLUP WATER SUPPLY PROJECT
NEW MEXICO

SAN JUAN LATERAL
PUMPING PLANT NOS. 4 AND 7

Kevin O'Shea
DESIGNED
Kevin O'Shea
DRAWN
Sara Putnam
CHECKED
TECH. APPR. Brandon Jackson, P.E.
APPROVED Alfred I. Bernstein
Peer Reviewer - Plant Structures Group

DENVER, CO 2020-01-24

PRECAST CONCRETE MANHOLES

PLAN AND SECTIONS

1695-D-60436

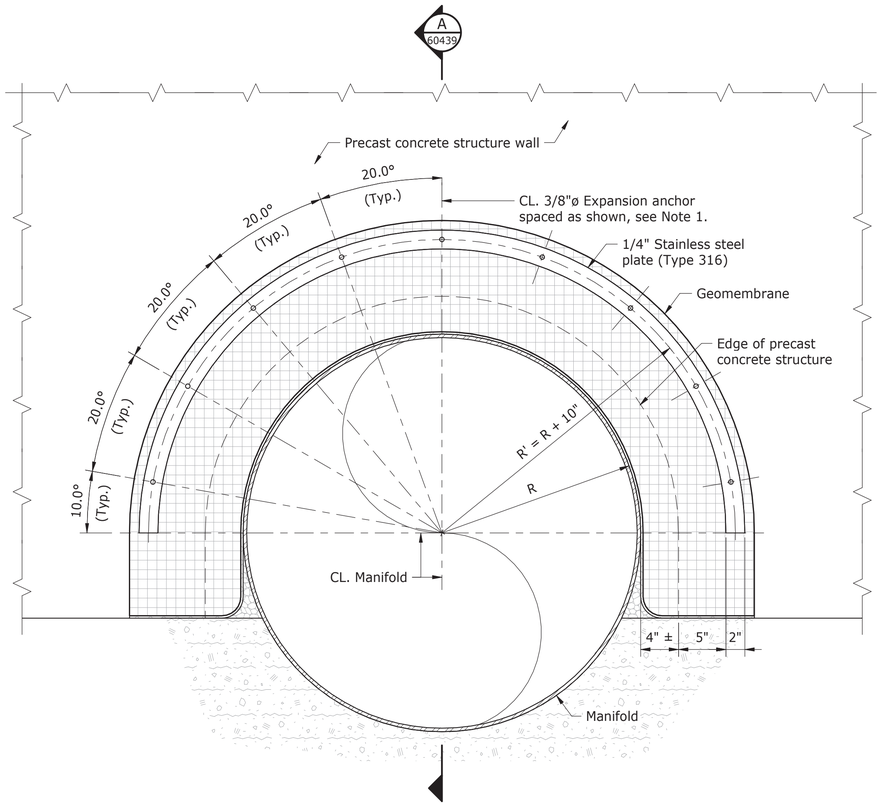

ELEVATION - PRECAST CONCRETE STRUCTURE BATTEN (EXTERIOR FACE)

Scale: 1 1/2" = 1'-0"

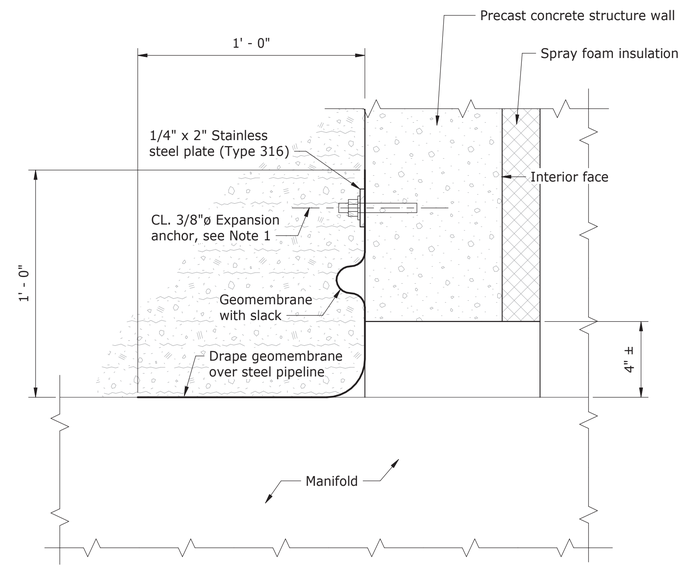

A SECTION

Scale: 3" = 1'-0"

NOTES

1. Install (9) 3/8"ø stainless steel expansion anchors (Type 316) per stainless steel batten as shown on drawings. See Specifications.

0 1/2' 1' 1 1/2'
Scale: 1 1/2" = 1'-0"

0 3" 6" 9"
Scale: 3" = 1'-0"

RECLAMATION
Managing Water in the West

ALWAYS THINK **SAFETY**

U.S. DEPARTMENT OF THE INTERIOR
BUREAU OF RECLAMATION

NAVAJO-GALLUP WATER SUPPLY PROJECT
NEW MEXICO

SAN JUAN LATERAL
PUMPING PLANT NOS. 4 AND 7

Kevin O'Shea
DESIGNED
Kevin O'Shea
DRAWN
Sara Putnam
CHECKED
TECH. APPR. Brandon Jackson, P.E.
APPROVED Alfred I. Bernstein
Peer Reviewer - Plant Structures Group

DENVER, CO 2020-01-24

PRECAST CONCRETE STRUCTURE BATTEN

ELEVATION AND SECTION

1695-D-60439

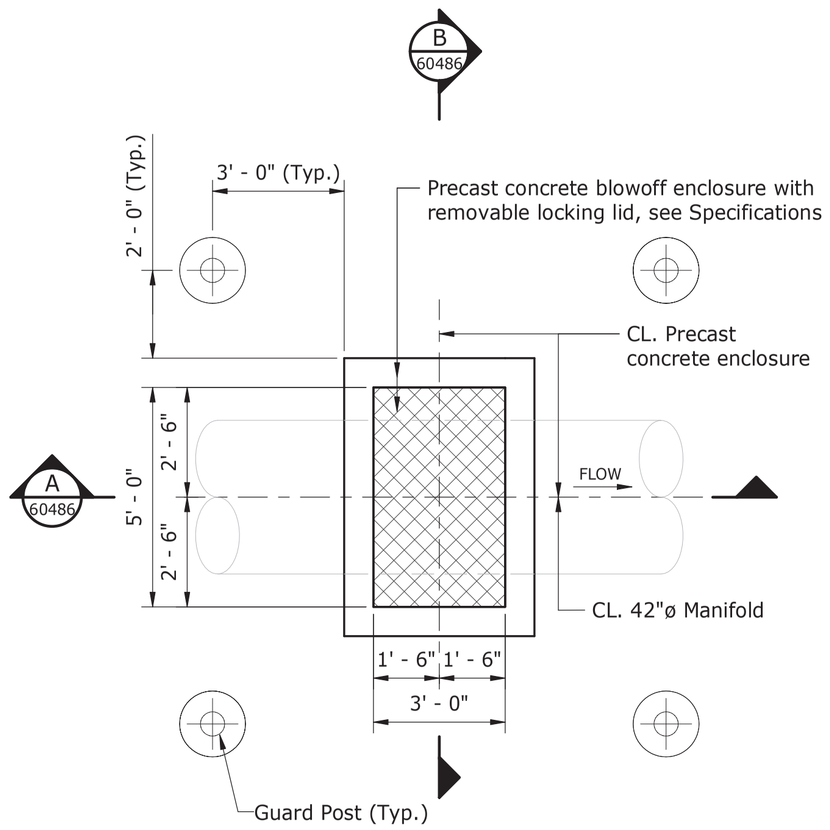

ROOF PLAN - BLOWOFF ENCLOSURE

Scale: 3/8" = 1'-0"

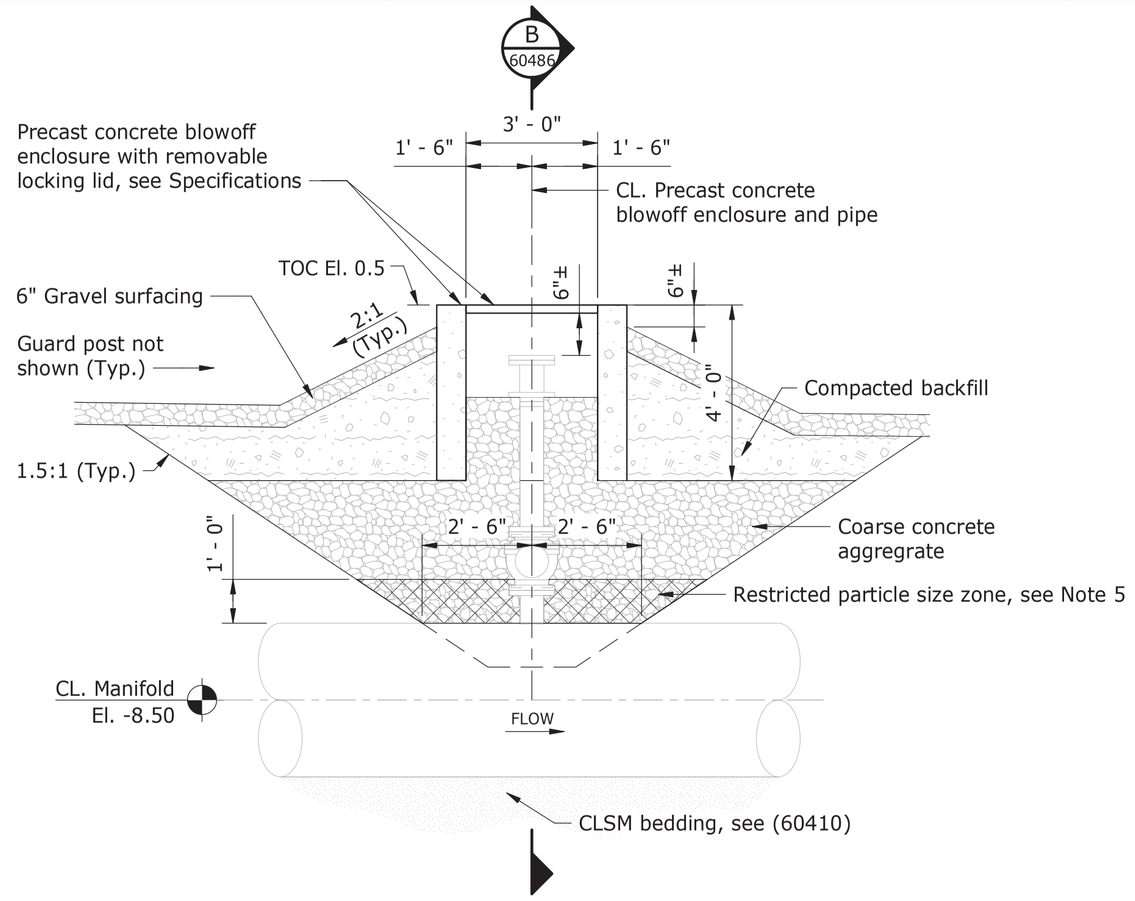

A SECTION

Scale: 3/8" = 1'-0"

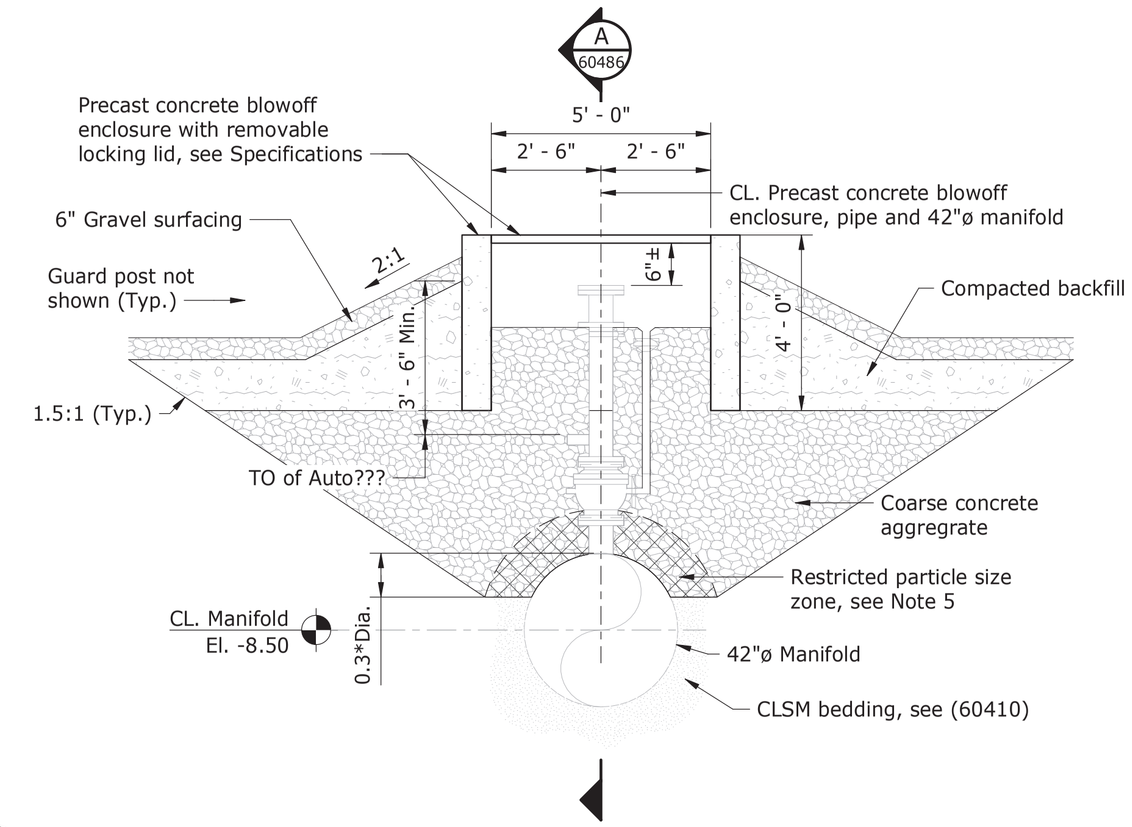

B SECTION

Scale: 3/8" = 1'-0"

PUMPING PLANT	DATUM (FT)
PUMPING PLANT NO. 7	EL. 6215.00

NOTES:
1. All elevations are based on NAVD88 vertical datum.
2. The datum elevation(s) identified in the table correspond to the El. 0.0 elevation identified on the drawing. All elevations reported on the drawings are relative to the El. 0.0 elevation unless noted otherwise.

0 2' 4' 6'
Scale: 3/8" = 1'-0"

NOTES

1. For Structural Design Data and Loads, see (60399) and (60400).
2. For locations of Pumping Plant No. 7 features, see (60406).
3. For Drawing Index, see (60396) and (60397).
4. For excavation and backfill requirements, see (60410).
5. Refer to Specifications Section 31 23 22 - Pipe Trench Earthwork for restricted particle size requirements.
6. All guard posts are Type I, see 40-D-60002.
7. Dia. Denotes nominal pipe diameter.

RECLAMATION
Managing Water in the West

ALWAYS THINK SAFETY

U.S. DEPARTMENT OF THE INTERIOR
BUREAU OF RECLAMATION
NAVAJO-GALLUP WATER SUPPLY PROJECT
NEW MEXICO

SAN JUAN LATERAL
PUMPING PLANT NOS. 4 AND 7

Kevin O'Shea
DESIGNED
Kevin O'Shea
DRAWN
Brandon Jackson
CHECKED
TECH. APPR. Brandon Jackson, P.E.
APPROVED Alfred I. Bernstein
Peer Reviewer - Plant Structures Group

DENVER, CO 2020-01-24

PRECAST CONCRETE BLOWOFF ENCLOSURE

PLAN AND SECTIONS

1695-D-60486

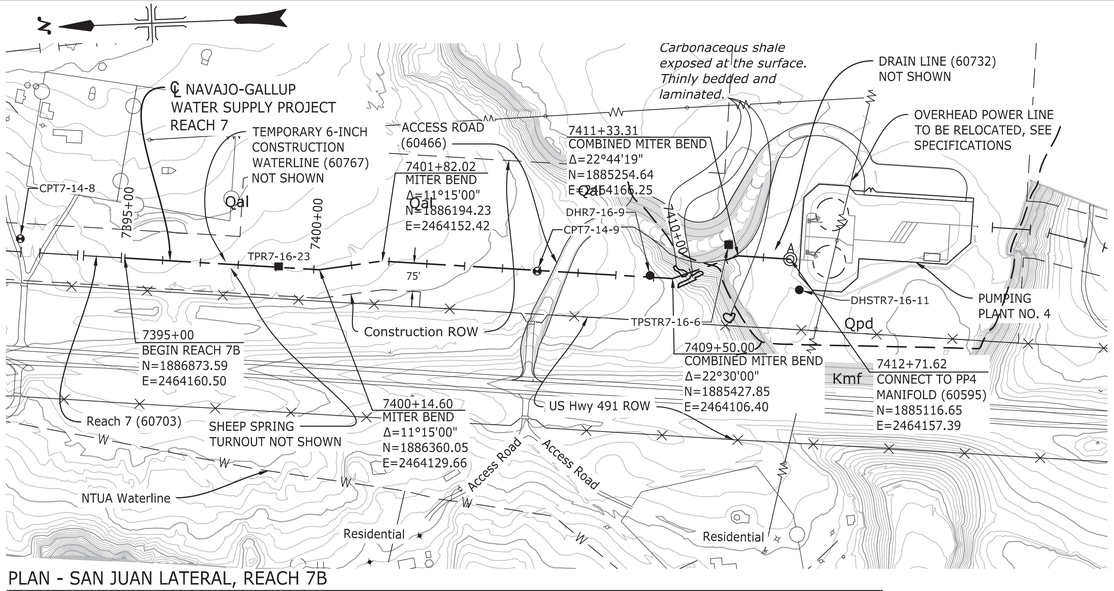

PLAN - SAN JUAN LATERAL, REACH 7B

0 200' 400'

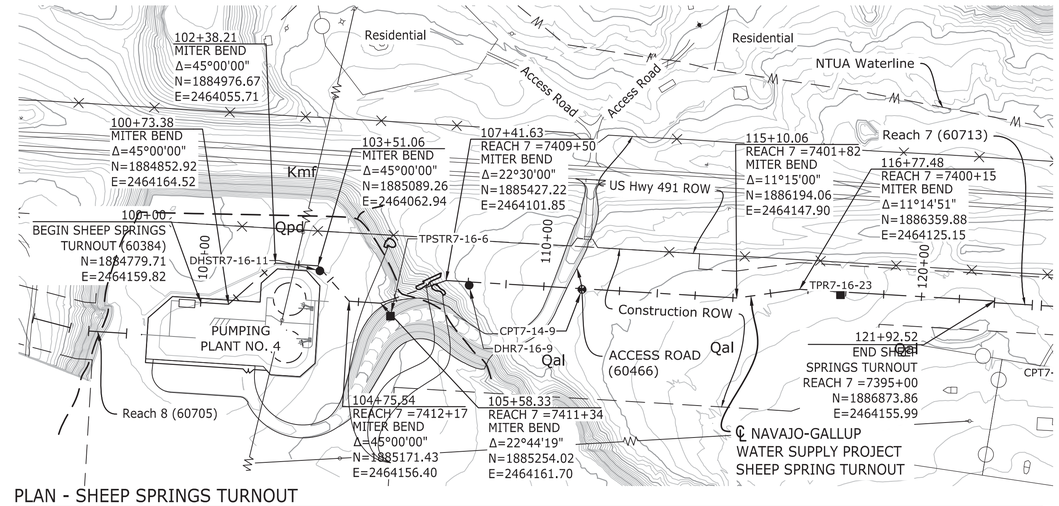

PLAN - SHEEP SPRINGS TURNOUT

0 200' 400'

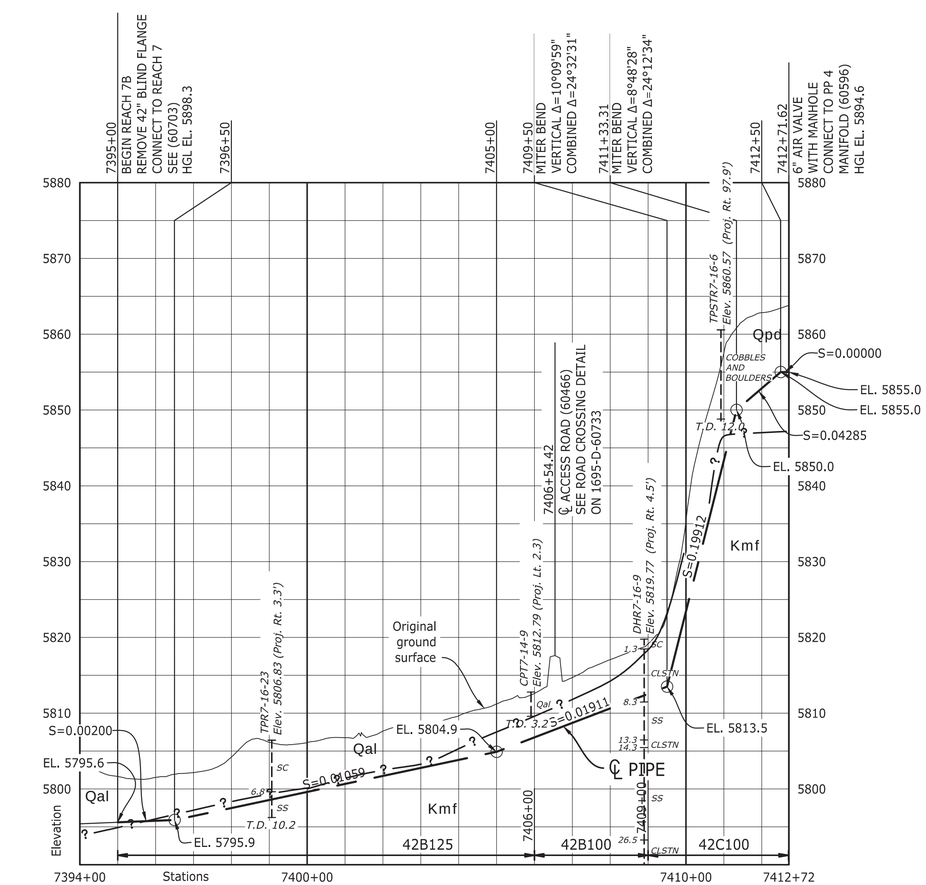

PROFILE - SAN JUAN LATERAL, REACH 7B

1" = 200' HOR., 1" - 20' VERT.

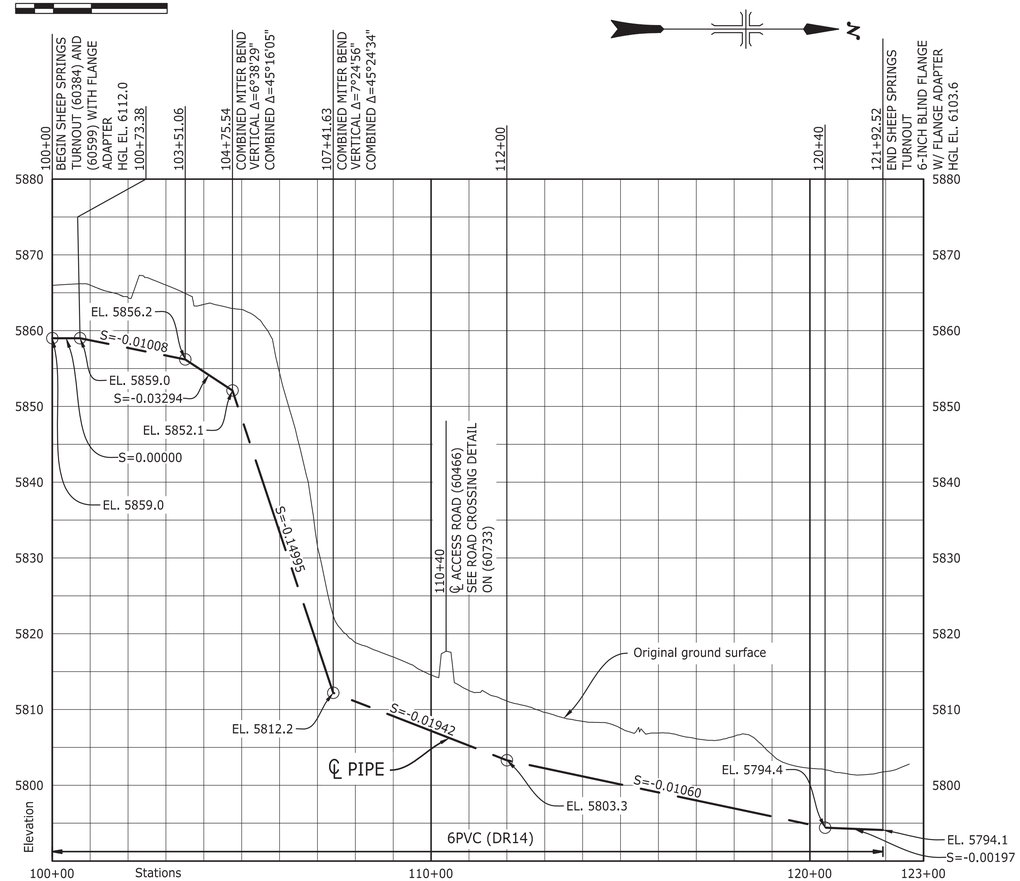

PROFILE - SHEEP SPRING TURNOUT

1" = 200' HOR., 1" - 20' VERT.

NOTES

1. For General Notes, Symbols, Abbreviations, and Pipe Classification, see (160677).
2. For Tank Drain Line Plan and Profile, see (60732).
3. For Temporary 6" Construction Waterline, see (60767).
4. For Trench Details, see (60768)

RECLAMATION
Managing Water in the West

ALWAYS THINK SAFETY

U.S. DEPARTMENT OF THE INTERIOR
BUREAU OF RECLAMATION
NAVAJO-GALLUP WATER SUPPLY PROJECT
NEW MEXICO

SAN JUAN LATERAL

PUMPING PLANT NOS. 4 AND 7

REV NO			
1	2020-03-03	D	Modified Temporary Construction Waterline alignment.
	Marner, Andrew (Andy) J P.E.		

Andrew Marner
DESIGNED
Andrew Marner
DRAWN
Jalissa Dehaan
CHECKED
Marner, Andrew (Andy) J P.E.
TECH. APPR.
Clough, Nicholas W P.E.
APPROVED
PER REVIEWER - Civil Engineer

DENVER, CO 2020-01-27

PLAN AND PROFILE

STA.7400+00 TO END

1695-D-60704

SHEET 1 OF 5

Released

LAST SAVED DATE 2020-03-03
LAST SAVED BY AMARNER

CAD SYSTEM AutoCAD 2013
CAD FILENAME 1695-D-60704-RD-1 OF 5.DWG

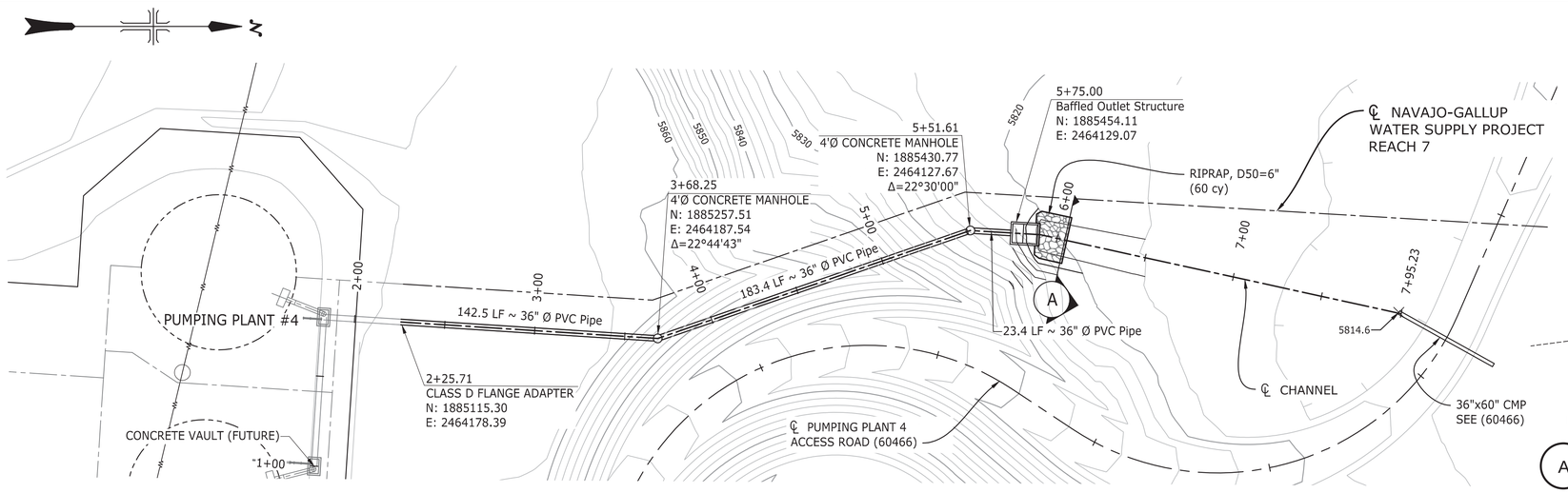

PLAN - PUMPING PLANT NO. 4 TANK DRAIN

0 20' 40' 80'

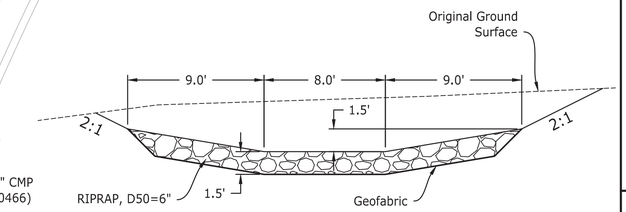

A SECTION - CHANNEL
1"=5'

NOTES

1. For General Notes, Symbols, Abbreviations, and Pipe Classification, see (60677).
2. For Drawing Index, see (60396) and (60397)
3. For Baffled Outlet Structure, see (60770)

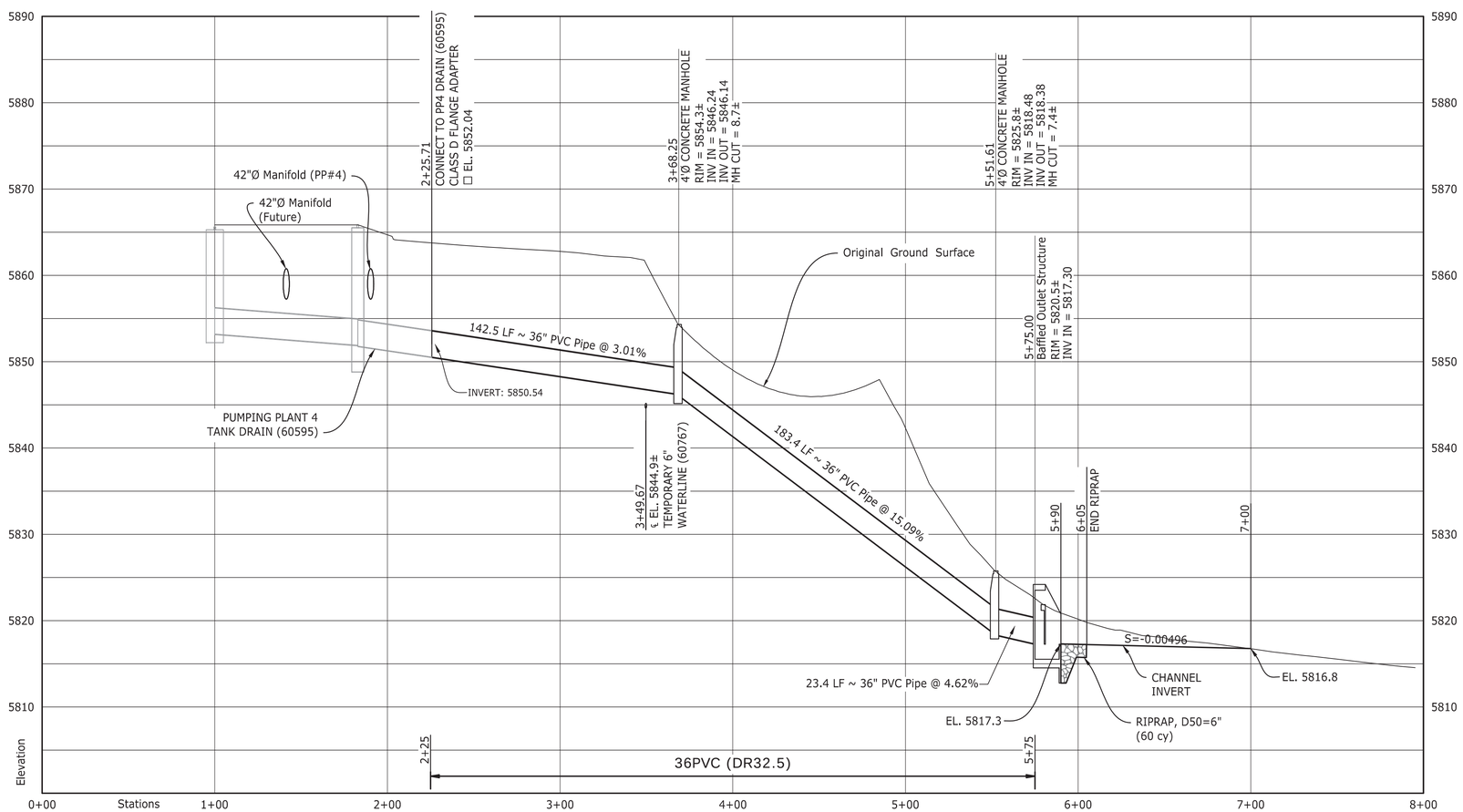

PROFILE - PUMPING PLANT NO. 4 TANK DRAIN

HOR: 1" = 40' , VERT: 1" = 8'

RECLAMATION
Managing Water in the West

ALWAYS THINK SAFETY

U.S. DEPARTMENT OF THE INTERIOR
BUREAU OF RECLAMATION
NAVAJO-GALLUP WATER SUPPLY PROJECT
NEW MEXICO

SAN JUAN LATERAL

PUMPING PLANT NOS. 4 AND 7

REV NO		
1	2020-03-03 Marner, Andrew (Andy) J P.E.	D Corrected Original Ground Surface in Profile to match Plan Contours.

Andrew Marner
DESIGNED
Andrew Marner
DRAWN
Jalissa Dehaan
CHECKED
Marner, Andrew (Andy) J P.E.
TECH. APPR.
Clough, Nicholas W P.E.
APPROVED
PER REVIEW - Civil Engineer

DENVER, CO 2020-01-27

PLAN AND PROFILE

PUMPING PLANT 4 DRAIN

1695-D-60732

SHEET 3 OF 5

Released

LAST SAVED DATE 2020-03-03
LAST SAVED BY AMARNER

CAD SYSTEM AutoCAD 23.0s
CAD FILENAME 1695-D-60732-RD-3 OF 5.DWG

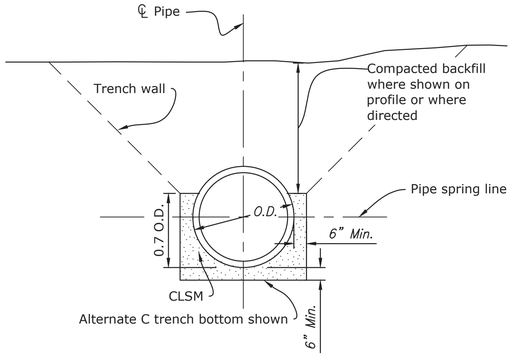

MATERIAL TYPE 1 TRENCH

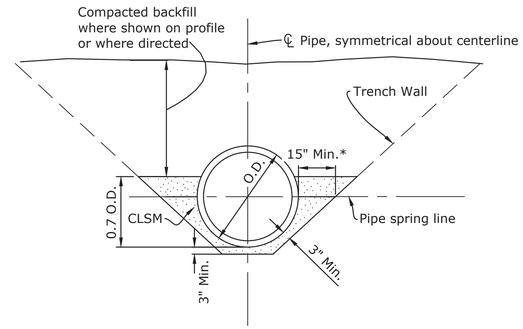

*Minimum Distance can be reduced to 6" when installing 6" PVC Pipe

MATERIAL TYPE 2 AND 3 TRENCH

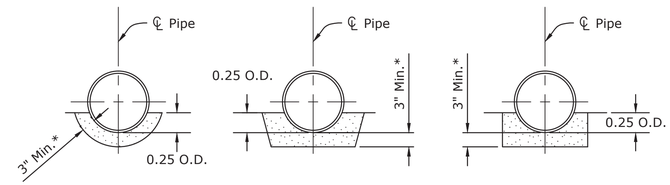

ACCEPTABLE TRENCH BOTTOMS FOR CLSM

* 6" Min required between bottom of pipe and rock surfaces

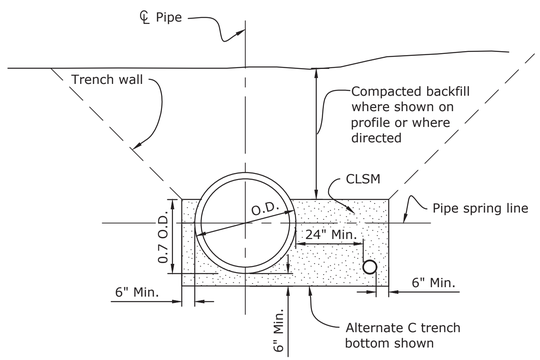

MATERIAL TYPE 1 TRENCH WITH 2 PIPELINES

REACH 7 STATION 7411+00 TO 7412+17

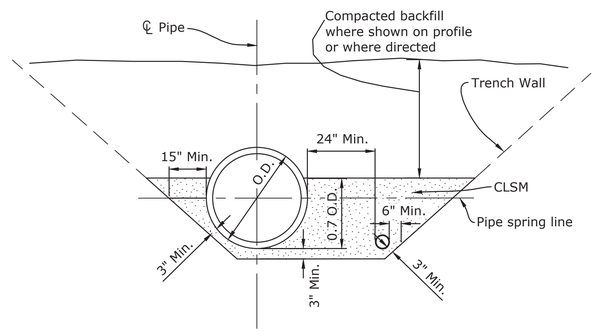

MATERIAL TYPE 2 AND 3 TRENCH WITH 2 PIPELINES

REACH 7 STATION 7411+00 TO 7412+17

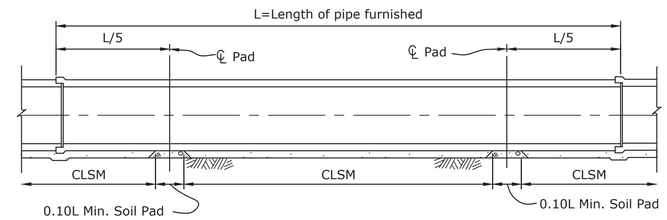

NOTE: Soil pads allow observation of the CLSM flowing from one side of the pipe to the other. See Note 7.

CLSM INSTALLATION WITH SOIL PADS

TYPICAL FOR ALL PIPE TYPES

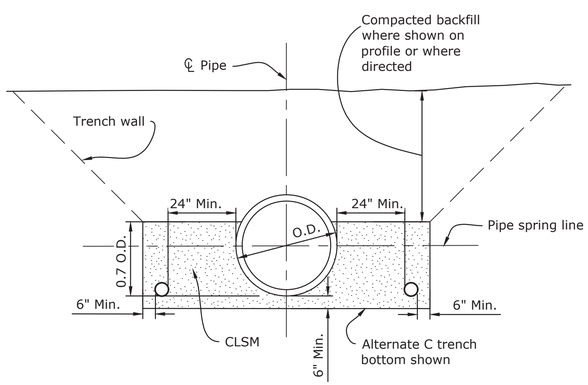

MATERIAL TYPE 1 TRENCH WITH 3 PIPELINES

REACH 7 STATION 7395+00 TO 7411+00

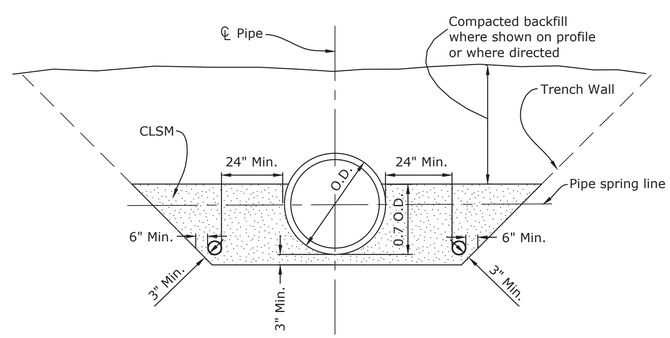

MATERIAL TYPE 2 AND 3 TRENCH WITH 3 PIPELINES

REACH 7 STATION 7395+00 TO 7411+00

NATIVE MATERIAL PROPERTIES

MATERIAL TYPE 1 - Typical trench wall materials would be rock; materials described as claystone, mudstone, or siltstone; highly cemented soils even if low density; sands and gravels; and silty or clayey material with inplace densities 95% Standard Proctor or higher.

MATERIAL TYPE 2 - Typical trench wall materials would include silty or clayey material or sands and gravels with inplace densities between 85% Standard Proctor or higher, but less than 95%.

MATERIAL TYPE 3 - Typical trench wall materials would include elastic silts, low density silty or clayey soils, or low-density cohesionless soils with a density below 85% Standard Proctor.

Trench Material Type locations, based on the above Native Material Properties and geology investigation, have been identified and correspond to minimum side clearance widths listed in the Side Clearance Table. Material Type 1's inferred bedrock surface is shown in the profile on drawing (60704). Material Types 2 and 3 locations are listed in the specifications.

NOTES

1. Drawing not to scale.
2. O.D is the outside diameter, in inches, of the pipe actually installed.
3. CLSM is Controlled Low Strength Material. See specifications for details.
4. Sloping, shoring, and benching shall be in accordance with Reclamation Safety and Health Standards.
5. CLSM is required in the bedding and embedment for all pipe types.
6. Warning tape and tracer wire (For plastic pipes) not shown, but are required. See specifications for details.
7. Other material may be submitted in lieu of soil pads for approval. Soil pad materials must not exceed the compressive strength of the CLSM.
8. Install pipe based on these specifications or pipe manufacturer's, whichever is more stringent.
9. Contractor to control CLSM placement in order to prevent floating of 6" diameter pipe.

RECLAMATION
Managing Water in the West

ALWAYS THINK SAFETY

U.S. DEPARTMENT OF THE INTERIOR
BUREAU OF RECLAMATION
NAVAJO-GALLUP WATER SUPPLY PROJECT
NEW MEXICO

SAN JUAN LATERAL

PUMPING PLANT NOS. 4 AND 7

Derek Kosakowski
DESIGNED
Derek Kosakowski
DRAWN
Jalissa DeHaan
CHECKED
Marner, Andrew (Andy) J P.E.
TECH. APPR.
Clough, Nicholas W P.E.
APPROVED
PEER REVIEWER - Civil Engineer

DENVER, CO 2020-01-26

PRESSURE PIPE TRENCH INSTALLATION

SECTIONS AND DETAILS

1695-D-60715

SHEET 2 OF 5

Released

LAST SAVED DATE 2020-01-26
LAST SAVED BY AMARNER

CAD SYSTEM AutoCAD 23
CAD FILENAME 1695-D-60715-RD-2 OF 5.DWG

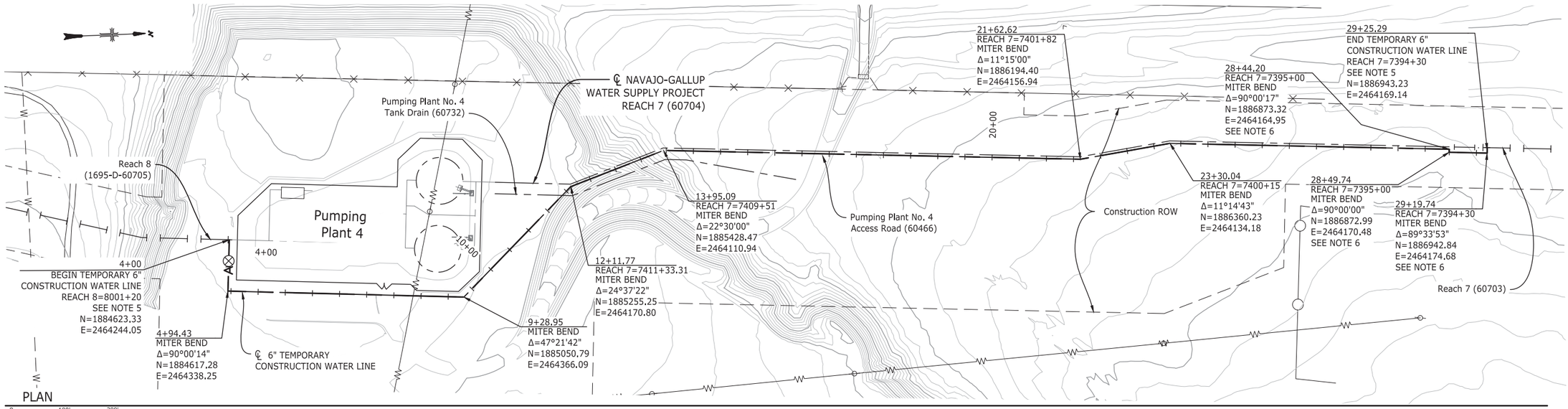

PLAN

0 100' 200'

NOTES

1. For Reach 8 Plan and Profile, see (60705).
2. For Reach 7 Plan and Profile, see (60703).
3. For Notes on Operation, see (60768).
4. For Thrust Blocks, see (60768).
5. Field Verify 6" Tee Location Prior to Construction.
6. Adjust 6" miter bends to match existing 6" flange connection.
7. Hydraulic grade line elevations (HGL EL.) shown are for the design Q of 1.5 cfs at steady state after PRV at Station 4+50.

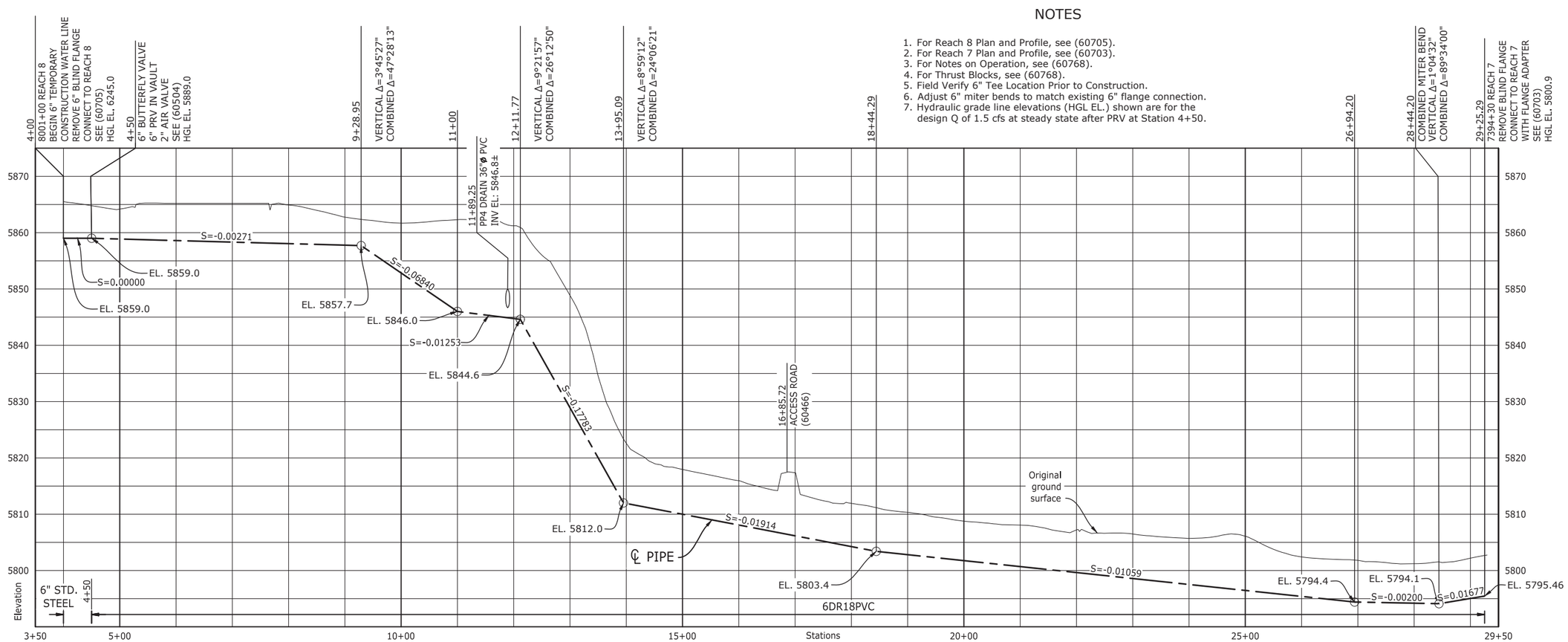

PROFILE

1" = 100' HOR., 1" = 10' VERT.

RECLAMATION
Managing Water in the West

ALWAYS THINK SAFETY

U.S. DEPARTMENT OF THE INTERIOR
BUREAU OF RECLAMATION
NAVAJO-GALLUP WATER SUPPLY PROJECT
NEW MEXICO

SAN JUAN LATERAL

PUMPING PLANT NOS. 4 AND 7

REV NO			
2	2020-06-30	D	Corrected PRV size to 6-inch.
1	2020-05-03	D	Adjusted alignment to avoid manhole for Tank Drain.

Jalissa DeHaan
DESIGNED
Jalissa DeHaan
DRAWN
Andrew Marner
CHECKED
Marner, Andrew (Andy)) P.E.
TECH. APPR.
Clough, Nicholas W P.E.
APPROVED
PER REVIEWER - Civil Engineer

DENVER, CO 2020-01-27

PLAN AND PROFILE

TEMPORARY 6-INCH CONSTRUCTION WATER LINE

1695-D-60767

SHEET 4 OF 5

LAST SAVED DATE 2020-06-30
LAST SAVED BY AMARNER

CAD SYSTEM AutoCAD 23.0s
CAD FILENAME 1695-D-60767-RD-4 OF 5-REV2.DWG

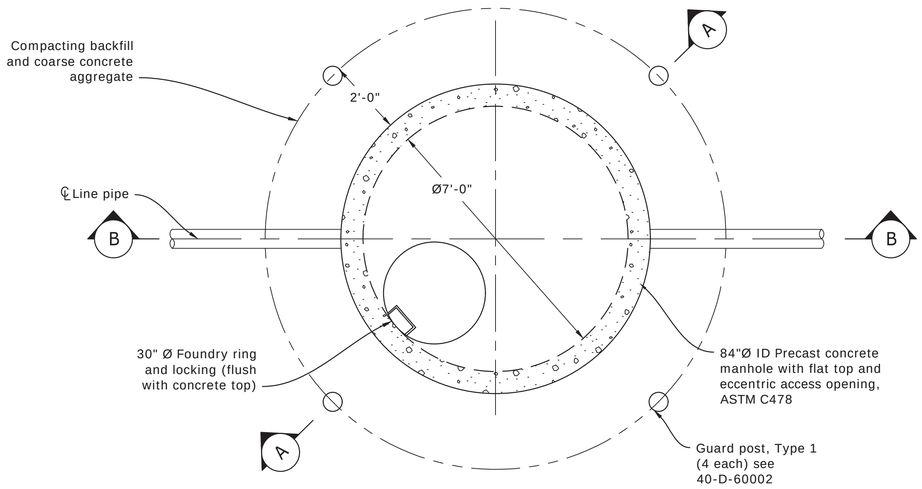

PLAN - 84" Ø MANHOLE FOR PRV AT STATION 4+50 (60767)

Scale: 1/2" = 1'

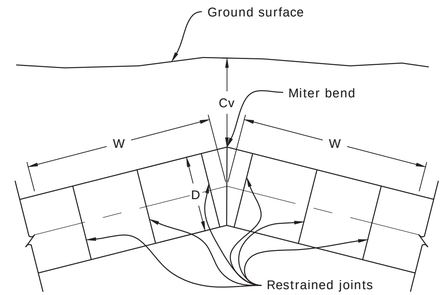

MITER RESTRAINED JOINT PIPE DETAIL

NOT TO SCALE

Reach 7 Restrained Joints						
P.I. Station	Head (ft)	Angle	Direction	D (inches)	Cover (ft)	W (ft)
7400+14.60	125	11°15'00"	Horizontal	42	6.5	6
7401+82.02	125	11°15'00"	Horizontal	42	5.6	7
7409+50.00	100	24°32'31"	Combined	42	9.3	8
7411+33.31	100	24°12'34"	Combined	42	10.8	7
Sheep Springs Turnout Restrained Joints						
P.I. Station	Head (ft)	Angle	Direction	D (inches)	Cover (ft)	W (ft)
100+73.38	700	45°00'00"	Horizontal	6	7.2	20
102+38.21	700	45°00'00"	Horizontal	6	9.9	20
103+51.06	700	45°00'42"	Combined	6	8.7	20
104+75.54	700	45°16'05"	Combined	6	10.8	20
105+58.33	700	22°44'19"	Horizontal	6	20.9	10
107+41.63	700	45°24'34"	Combined	6	10.2	20
115+10.06	700	11°15'00"	Horizontal	6	7.2	5
116+77.48	700	11°14'51"	Horizontal	6	8.1	5
121+92.52	700	NA	Dead End	6	7.6	150
Temporary 6 Inch Construction Waterline Restrained Joints						
P.I. Station	Head (ft)	Angle	Direction	D (inches)	Cover (ft)	W (ft)
4+94.43	542	90°00'00"	Horizontal	6	5.2	35
9+28.95	542	47°28'13"	Combined	6	4.6	17
12+11.77	542	26°12'50"	Combined	6	10.9	8
13+95.09	542	24°06'21"	Combined	6	10.9	8
21+62.62	542	11°15'00"	Horizontal	6	7	4
23+30.04	542	11°14'43"	Horizontal	6	7.9	4
28+44.20	542	90°00'17"	Combined	6	7.4	35
28+49.74	542	90°00'00"	Horizontal	6	7.4	35
29+19.74	542	89°33'53"	Horizontal	6	7.2	35

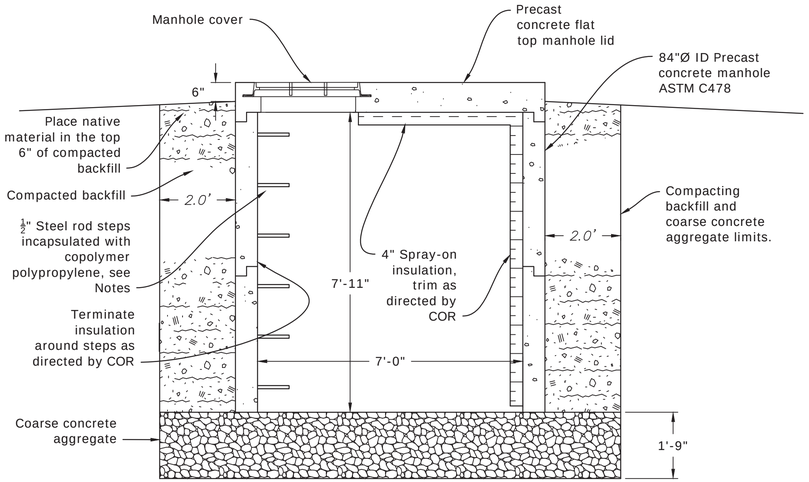

A SECTION

Scale: 1/2" = 1'

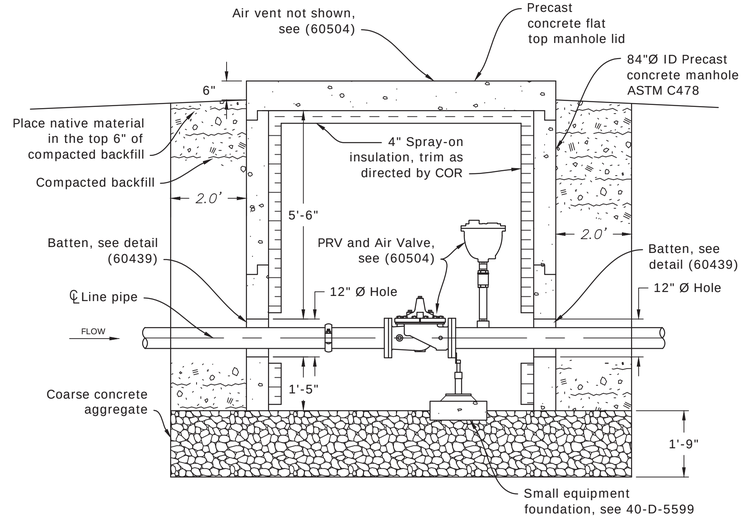

B SECTION

Scale: 1/2" = 1'

DESIGN PARAMETERS

1. Passive Earth Pressure, Pe = 148 psf /ft. (factored), in rock, Pe = 200 psf / ft. (factored).
2. Cover of Earth over Pipe, Cv = See Tables.
3. Weight of Earth Cover, Ec = 100 pcf.
4. Allowable bearing earth pressure, Be = 3000 psf.

OPERATION

1. Filling operations are to be performed by Bureau of Reclamation personnel ONLY. Contractor must request water from COR and provide a minimum 72 hour notice.
2. PRV at Sta. 4+50 in the Temporary 6 inch Construction Waterline to be set to a maximum downstream HGL of 5889.
3. A pressure gauge installed on 6" air valve at the beginning of Reach 7 (Station 7022+60, Sheet 60696) to be used to estimate filling level in Reach 7.
4. A pressure gauge installed on 6" air valve at the beginning of Reach 8 (Station 8001+00, Sheet 60705) to be used to estimate filling level in Reach 8.
5. The operation of the valve and temporary 6" construction water line must be monitored at all times while the valves are open.
6. The pressure in the Reach 7 line should be monitored periodically when not in use.

NOTES

1. For General Notes, Symbols, Abbreviations, and Pipe Classification, see (60677).
2. For Reach 7 Plan and Profiles, see (60703) and (60704).
3. For Reach 8 Plan and Profile, see (60705).
4. Manhole steps shall be made of ½-inch steel rod encapsulated with copolymer polypropylene or approved equal and shall conform to ASTM C478. Steps shall have minimum projections of 4-inches, spaced no more than 16" apart, minimum overall widths of 14 inches and anchored into the walls at least 3½ inches deep.
5. Manhole cover shall be provided with a lockable lid.

RECLAMATION
Managing Water in the West

ALWAYS THINK SAFETY

U.S. DEPARTMENT OF THE INTERIOR
BUREAU OF RECLAMATION
NAVAJO-GALLUP WATER SUPPLY PROJECT
NEW MEXICO

SAN JUAN LATERAL

PUMPING PLANT NOS. 4 AND 7

REV NO		
1	2020-03-03	D Updated Restraint table.
	Marner, Andrew (Andy) J P.E.	

Jalissa DeHaan
DESIGNED
Jalissa DeHaan
DRAWN
Andrew Marner
CHECKED
Marner, Andrew (Andy) J P.E.
TECH. APPR.
Clough, Nicholas W P.E.
APPROVED
PEER REVIEWER - Civil Engineer

DENVER, CO 2020-01-27

THRUST RESTRAINT TABLES

SECTIONS AND DETAILS

1695-D-60768

SHEET 5 OF 5

Released

LAST SAVED DATE 2020-03-03
LAST SAVED BY AMARNER

CAD SYSTEM AutoCAD 23
CAD FILENAME 1695-D-60768-RD-5 OF 5.DWG

Drawing 1695-D-60525 has been DELETED from this package.

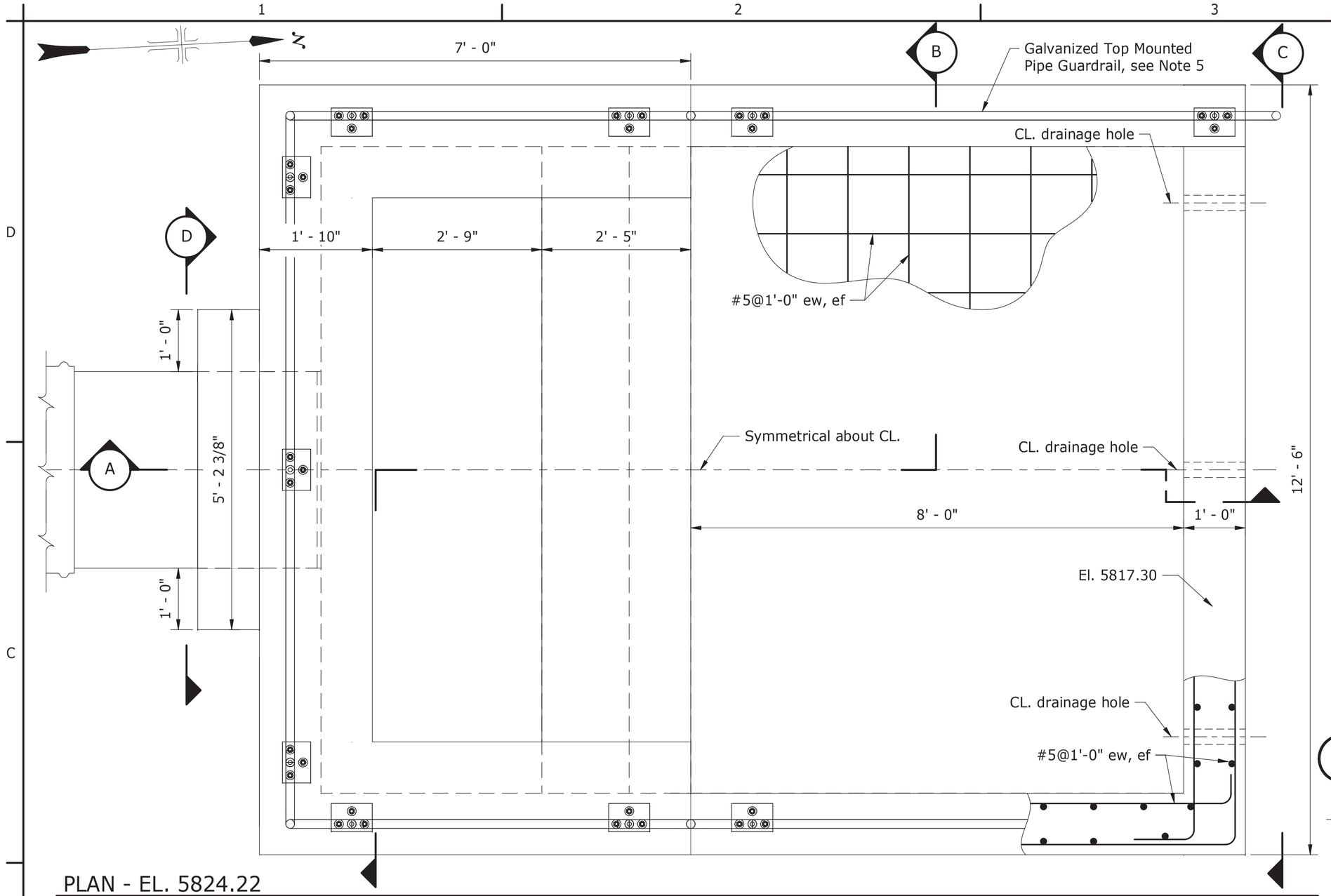

PLAN - EL. 5824.22

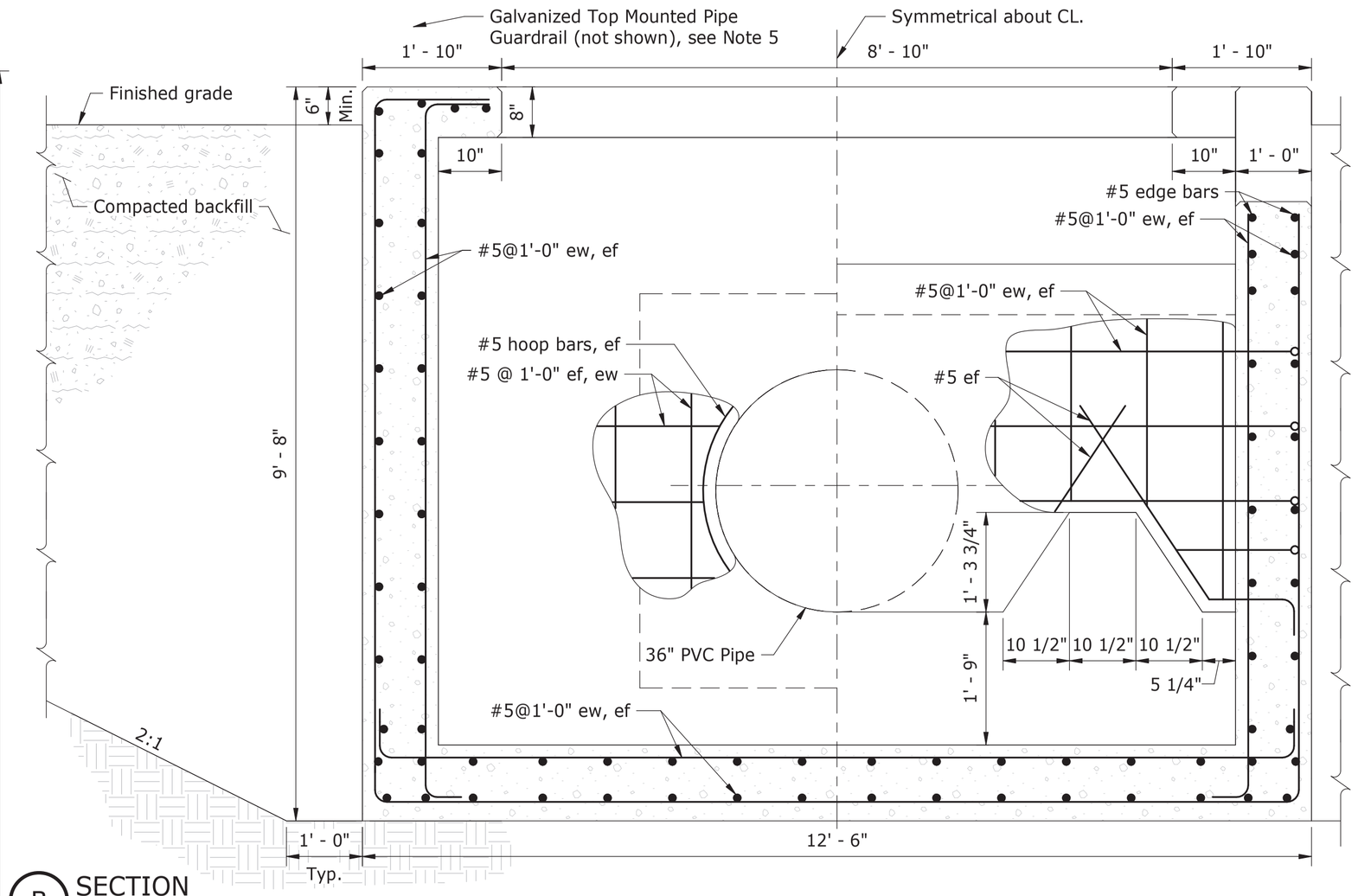

B SECTION

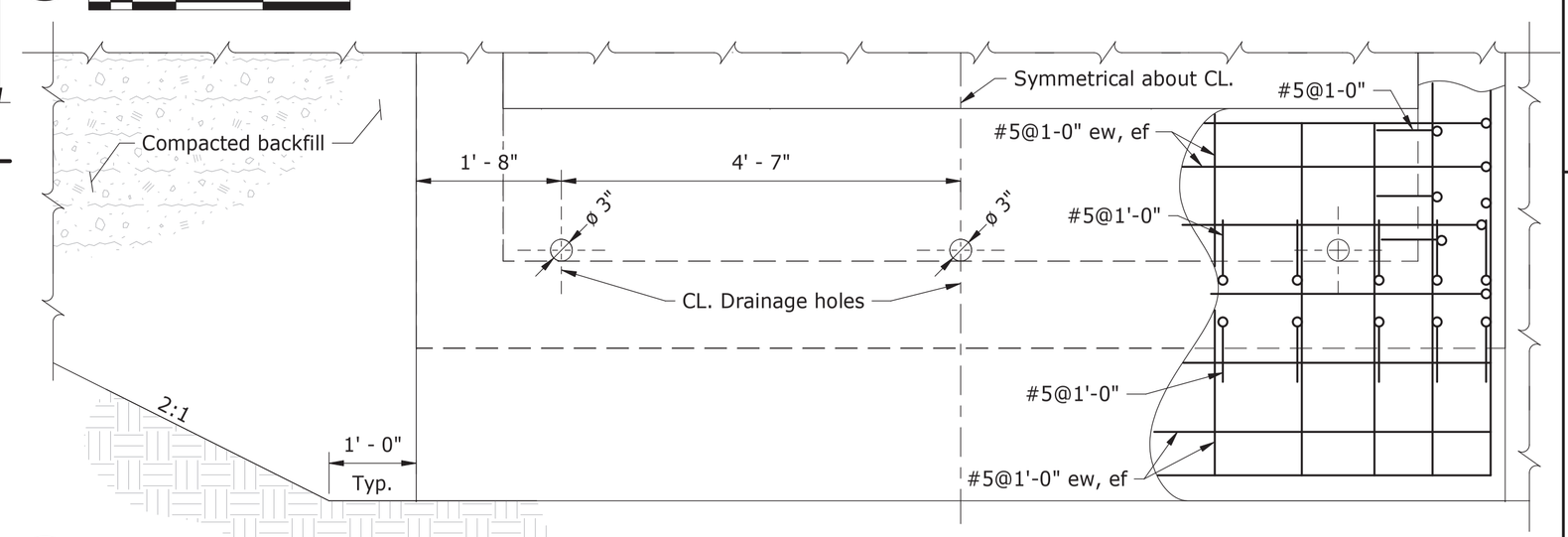

C SECTION

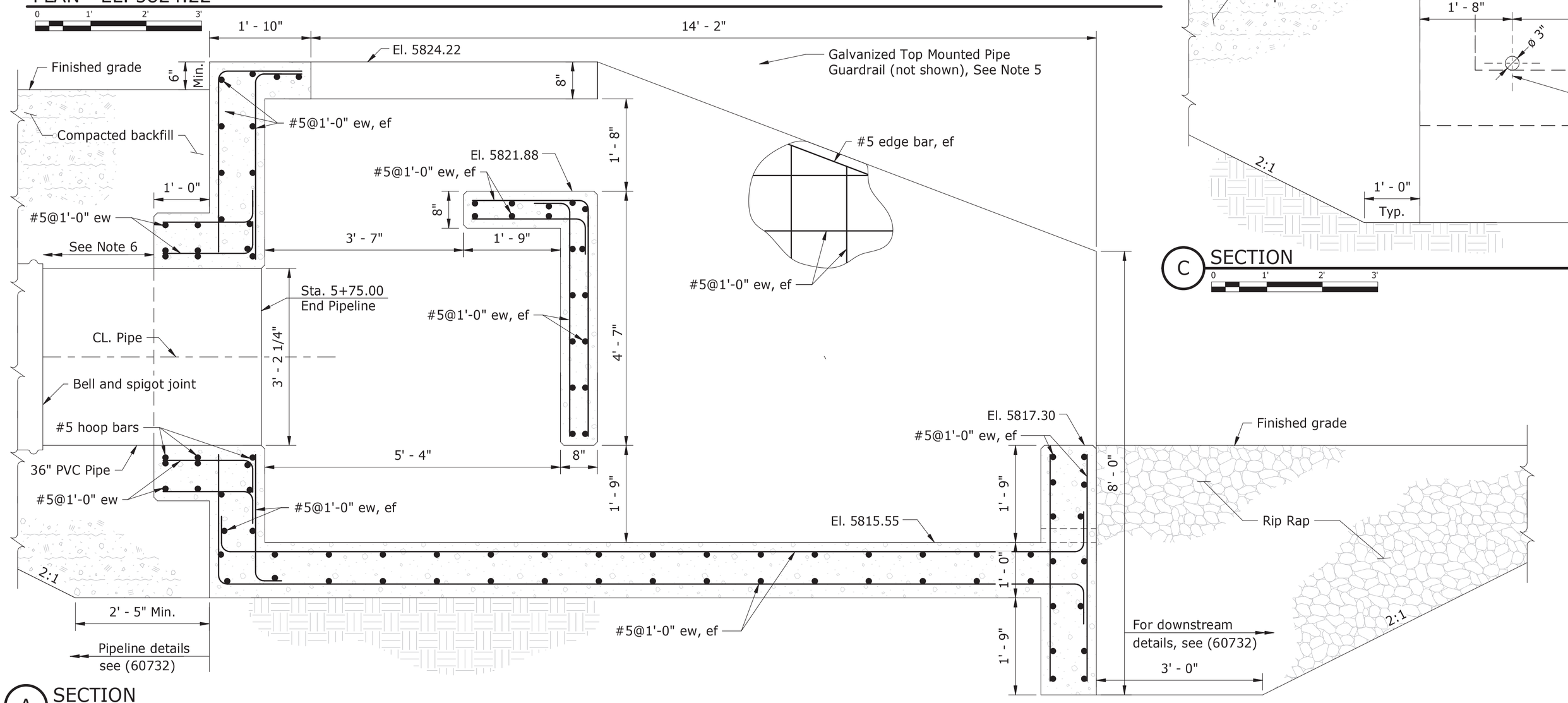

A SECTION

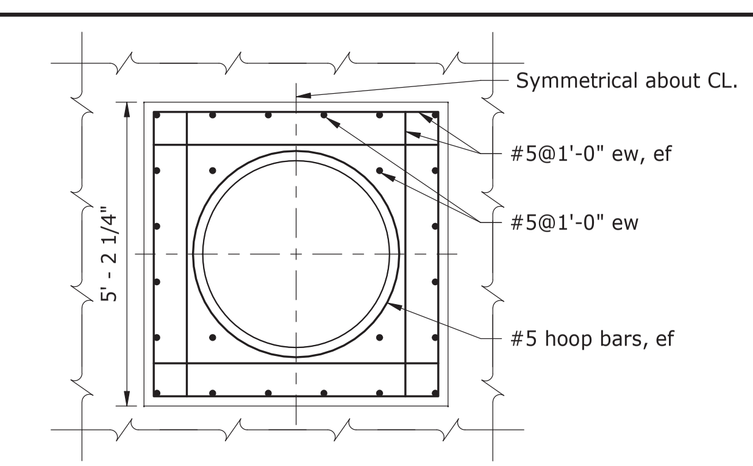

D SECTION

NOTES

1. For Drawing Index, see (60396) and (60397).
2. For Pumping Plant 4 Tank Drain, Plan and Profile, See (60732).
3. For Concrete Outline General Notes and Reinforcement General Notes, see 40-D-60003.
4. For minimum requirements for detailing reinforcement, see 40-D-60004.
5. For Galvanized Top Mounted Pipe Guardrails details, see 40-D-6592.
6. Pipe joints constructed at 1'-8", 3'-4", and 7'-0" from face of structure.

RECLAMATION
Managing Water in the West

ALWAYS THINK SAFETY

U.S. DEPARTMENT OF THE INTERIOR
BUREAU OF RECLAMATION
NAVAJO-GALLUP WATER SUPPLY PROJECT
DIVISION
SAN JUAN LATERAL
PUMPING PLANT NOS. 4 AND 7

EDWARD J. W. DOWNS
DESIGNED
EDWARD J. W. DOWNS
DRAWN
GABRIEL E. LEDEZMA
CHECKED
TECH. APPR. JOSEPH M. GEMPERLINE, P.E.
APPROVED JASON G. WAGNER, P.E.
Peer Reviewer - CIVIL STRUCTURES GROUP

DENVER, CO 2020-01-24

BAFFLED OUTLET STRUCTURE CONCRETE OUTLINE AND REINFORCEMENT

PLAN AND SECTIONS

1695-D-60770

INSTRUMENTATION DEVICE AND FUNCTION SYMBOLS

Shared Display & Control System	Programmable Logic Controller	Computer System and Software	Discrete Instrument	Location and Accessibility
				Located in field Not panel, cabinet, or console mounted Visible at field location Normally operator accessible
				Located in or on front of central or main panel or console Visible on front of panel or on video display Normally operator accessible at panel front or console
				Located in rear of central or main panel Located in cabinet behind panel Not visible on front of panel or on video display Not normally operator accessible at panel or console
				Located in or on front of secondary or local panel or console Visible on front of panel or on video display Normally operator accessible at panel front or console
				Located in rear of secondary or local panel Located in field cabinet Not visible on front of panel or on video display Not normally operator accessible at panel or console
				Interlock or control function
			I	Undefined Interlock
			f(x)	PLC Function
				Pilot Light or Gauge Glass Illuminator
				Dual Function or Instruments sharing common housing

FACILITY AREA DESIGNATION

Position	Description	Name		Number
1	Lateral	San Juan		S
		Cutter		C
2 & 3	Site	Lateral	Facility	
		San Juan	Intake & Pumping Plant	01
			Water Treatment Plant	02
			Pumping Plant No. 2	03
			Pumping Plant No. 3	04
			Pumping Plant No. 4	05
			Pumping Plant No. 7	06
			Pumping Plant No. 8	07
			Black Hat Tank	08
			McKinley Surge Tank	09
			NAPI Turnout	11
			Sanostee/Burnham Turnout	12
			Newcomb Turnout	13
			Naschitti Turnout	14
			Crownpoint Turnout	15
			Rock Springs Turnout	16
		Cutter	Cutter Dam	01
			Pumping Plant No. 1	02
			Pumping Plant No. 2	03
			Regulating Tank No. 2	04
			NAPI Turnout	11
4 & 5	Physical Location	Yard		01
		Pump Room		02
		Air Chamber Room		03
		Chemical Building		04
		Turnout Building		05

NGWSP FACILITIES

Lateral	Facility	Formal Name
San Juan	Intake & Pumping Plant	Tsétaak'áán
San Juan	Water Treatment Plant	
San Juan	Pumping Plant 2	Tsé Da' azkání
San Juan	Pumping Plant 3	Tó Ałts'ísí
San Juan	Pumping Plant 4	Tooh Haltsooi
San Juan	Pumping Plant 7	Bahastł'ah
San Juan	Pumping Plant 8	Tohlakai
San Juan	Pumping Plant 12	
San Juan	Pumping Plant 13	Tsé Łí'áhí
San Juan	Pumping Plant 14.1	Tsé Daat'ees
San Juan	Pumping Plant 14.2	Iyanbito
San Juan	Pumping Plant 14.6	
San Juan	Pumping Plant 17.a	Tsé Łichii dah Azkání
Cutter	Cutter Dam	
Cutter	Pumping Plant No. 1	
Cutter	Pumping Plant No. 2	
Cutter	Regulating Tank No. 2	
Cutter	Water Treatment Plant	
Cutter	Regulating Tank No. 3	

NOTES

1. Equipment and instrumentation symbols are based on ANSI/ISA standards.
2. The first value in the pumping plant instrument tag/loop identification number indicate the associated pump unit. i.e. 101 is associated with Unit 1 and 201 is associated with Unit 2.
3. Area designator is as indicated in associated area label unless shown otherwise in the equipment/instrument tag.

INSTRUMENT AND FUNCTION IDENTIFICATION

Letter	Column 1	Column 2	Column 3	Column 4	Column 5
	Measuring/Initiating Variable	Variable Modifier	Readout/Passive Function	Output/Active Function	Function Modifier
A	Analysis		Alarm		
B	Burner, Combustion		Users Choice	Users Choice	Users Choice
C	Users Choice			Control	Close
D	Users Choice	Difference,Differential			Deviation
E	Voltage		Sensor, Primary Element		
F	Flow, Flow Rate	Ratio			
G	Users Choice		Glass, Gauge, Viewing Device		
H	Hand				High
I	Current		Indicate		
J	Power		Scan		
K	Time, Schedule	Time Rate of Change		Control Station	
L	Level		Light		Low
M	Users Choice				Middle, Intermediate
N	Users Choice		Users Choice	Users Choice	Users Choice
O	Users Choice		Orifice, Restriction		Open
P	Pressure		Point (Test Connection)		
Q	Quantity	Integrate, Totalize	Integrate, Totalize		
R	Radiation		Record		Run
S	Speed, Frequency	Safety		Switch	Stop
T	Temperature			Transmit	
U	Multivariable		Multifunction	Multifunction	
V	Vibration, Mechanical Analysis			Valve, Damper, Louver	
W	Weight, Force		Well, Probe		
X	Unclassified	X-axis	Accessory Devices, Unclassified	Unclassified	Unclassified
Y	Event State, Presence	Y-axis		Auxiliary Device	
Z	Position, Dimension	Z-axis, Safety Instrument System		Driver, Actuator, Unclassified final control element	

TYPICAL TAG NUMBERS, TAGGING STANDARD & DESIGNATION

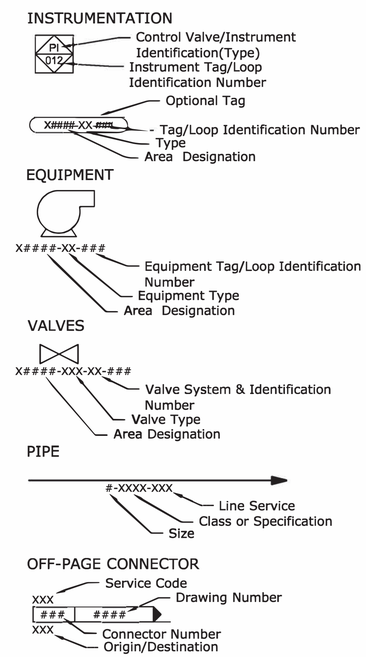

RECLAMATION
Managing Water in the West

ALWAYS THINK SAFETY

U.S. DEPARTMENT OF THE INTERIOR
BUREAU OF RECLAMATION
NAVAJO GALLUP WATER SUPPLY PROJECT
NEW MEXICO

SAN JUAN LATERAL
PUMPING PLANT NOS. 4 AND 7

Darryl Liscomb
DESIGNED
Darryl Liscomb
DRAWN
Amy Young
CHECKED
TECH. APPR. Elizabeth Morley, P.E.
APPROVED Jay Boggess
PEER REVIEWER - Manager, Electrical Design Group
DENVER, CO 2020-01-24

P&ID

PUMPING PLANT SYMBOLS & ABBREVIATIONS

1695-D-60505

SHEET 1

DATE AND TIME PLOTTED
PLOTTED BY
CAD SYSTEM
CAD FILENAME

VALVE SYMBOLS

Symbol	Description
	Butterfly Valve
	Ball Valve
	Globe Valve
	Gate Valve
	Plug Valve
	Needle Valve
	Pinch Valve
	Angled Valve
	Three Way Valve
	Four Way Valve
	Knife Valve
	Diaphragm Valve
	Rotary Valve
	Stop Check Valve
	Check Valve
	Control Valve
	Rupture Disc (Pressure Relief)
	Rupture Disc (Vacuum Relief)
	Pressure Relief Valve
	Vacuum Relief Valve
	Pressure and Vacuum Relief Valve
P	Pilot Operated Relief Valve

CONTROL VALVE ACTUATOR SYMBOLS

Symbol	Description
	Pressure Reducing Regulator
	Pressure Reducing Regulator with External Tap
	Back Pressure Regulator
	Back Pressure Regulator with External Tap
	Differential Pressure Reducing Regulator
	Pressure Reducing Regulator with Integral Outlet
	Piston/Cylinder Actuator
	Handwheel/Manual Actuator
	Diaphragm Actuator - Spring Return Actuator
	Pressure Balanced Diaphragm Actuator
	Diaphragm Actuator
	Throttling Actuator
	Spring Actuator
M	Motor Actuator
S	Solenoid Actuator
E/H	Electro-Hydraulic Actuator
D	Digital Actuator
S R	Solenoid Actuator with Manual Reset

MECHANICAL COMPONENTS

Symbol	Description
	Pump
	Dome Roof Tank
	Electric Motor
	Agitator
	Compressor
	Vent Silencer
	Flange
	Orifice
	Duplex Strainer
	Y-Strainer
	Pulsation Damper
	Vertical Can Pump
M	Magnetic Flow Meter
	Pitot Tube Flow Meter
	Chlorine Residual Analyzer
	Peristaltic Pump
	Calibration Column

MECHANICAL COMPONENTS

Symbol	Description
	Heat Exchanger
	Vent
	Open Drain
	Expansion Joint

MECHANICAL COMPONENTS

Symbol	Description
	Flow Conditioning Device
	Conveyor Scraper
	Flexible Hose

GATES

Symbol	Description
	Weir Gate
	Fabricated Slide Gate
	Stop Log

SIGNAL PATHS

Linetype	Function
	Primary Fluid System
	Secondary Fluid System
	Instrument Supply
	Jacketed Pipe Segment
	Electrical Signal
	Pneumatic Signal
	Hydraulic Signal
	Data/Software Communication
	Capillary Tube
	Mechanical Link

EQUIPMENT TYPE

Designation	Description	Designation	Description
A	Agitator, Mixer	M	Motor
AC	Air Chamber	MBV	Motor Operated Ball Valve
ADV	Automatic Drain Valve	MBFV	Motor Operated Butterfly Valve
ARV	Air Release Valve	MCE	Motor Control Equipment
AVC	Combination Air Valve	P	Pump
BFP	Back Flow Preventer	PCV	Pressure Control Valve
BFV	Butterfly Valve	PRV	Pressure Relief Valve
BGT	Butterfly Gate	PSV	Pressure Safety Valve
BV	Ball Valve	SGT	Slide Gate
C	Compressor	SL	Stop Log
CP	Control Panel	SR	Strainer
CV	Check Valve	SRB	Bucket Strainer
FGT	Flap Gate	SRY	Y-Strainer
FIL	Filter	SRT	T-Strainer
GLV	Globe Valve	SV	Solenoid Valve
GV	Gate Valve	TK	Tank
HTR	Heater	VRV	Air Vacuum Valve
IMV	Integrated Manifold Valve	WGT	Weir Gate

LINE SERVICE CODES

AV	Atmospheric Vent	ME	Methanol
BD	Blowdown	N	Nitrogen
BRR	Brine Return	NA	Caustic
BRS	Brine Supply	NAS	Caustic Sewer
CHS	Chemical Sewer	NG	Natural Gas
CLF	Chlorine Feed	NH	Amonia
CLI	Chlorine Injection	OWS	Oily Water Sewer
CLS	Chlorine Sample	OX	Oxygen
CV	Cold Vent	P	General Process
CWR	Cooling Water Return	PA	Plant Air
CWS	Cooling Water Supply	PW	Process Water
DMW	Demineralized Water	RV	Relief Vent
DR	Drain	RW	Raw Water
DS	Dilution Steam	SO	Seal Oil
DW	Drinking Water	SS	Sanitary Sewer
FF	Flushing Fluid	STS	Storm Sewer
FG	Fuel Gas	SW	Service Water
FO	Fuel Oil	TWR	Tempered Water Return
FW	Fire Water	TWS	Tempered Water Supply
IA	Instrument Air	WW	Waste Water
LNG	Liquefied Natural Gas		
LO	Lube Oil		
LPG	Liquefied Petroleum Gas		

VALVE SYSTEM DESIGNATION

Designation	Description
AC#	Air Chamber
ACS	Air Chamber System
CS	Chlorine Sampling
CST	Chlorine Storage Tank
CF	Chlorine Feed
DH	Discharge Header
ES	Emergency Shower
ST	Storage Tank / Surge Tank
TO	Turnout
TS#	Tank Sampling
U#	Unit

PIPE TYPE

Designation	Description
CS-3/8" W.T.	Carbon Steel $\frac{3}{8}$" Wall Thickness
CS-1/4" W.T.	Carbon Steel $\frac{1}{4}$" Wall Thickness
CS Sch 10	Carbon Steel Schedule 10
CS Sch 20	Carbon Steel Schedule 20
CS-Std	Carbon Steel Standard
CU	Copper
PVC Sch 80	Polyvinyl Chloride Schedule 80
SS-Std	Stainless Steel Standard
SS 316L Sch 80	Stainless Steel 316L Schedule 80

RECLAMATION
Managing Water in the West

ALWAYS THINK SAFETY

U.S. DEPARTMENT OF THE INTERIOR
BUREAU OF RECLAMATION
NAVAJO GALLUP WATER SUPPLY PROJECT
NEW MEXICO

SAN JUAN LATERAL
PUMPING PLANT NOS. 4 AND 7

Darryl Liscomb
DESIGNED
Darryl Liscomb
DRAWN
Amy Young
CHECKED
Elizabeth Morley P.E.
TECH. APPR. Elizabeth Morley, P.E.
APPROVED Jay Boggess
PEER REVIEWER - Manager, Electrical Design Group
DENVER, CO 2020-01-24

P&ID

PUMPING PLANT SYMBOLS & ABBREVIATIONS

1695-D-60506

SHEET 1

LAST SAVED DATE 2020-01-27
LAST SAVED BY DLISCOMB

CAD SYSTEM AutoCAD T3 0s
CAD FILENAME 1695-D-60506 SYM & ABBV SHEET 2.DWG

RECLAMATION
Managing Water in the West

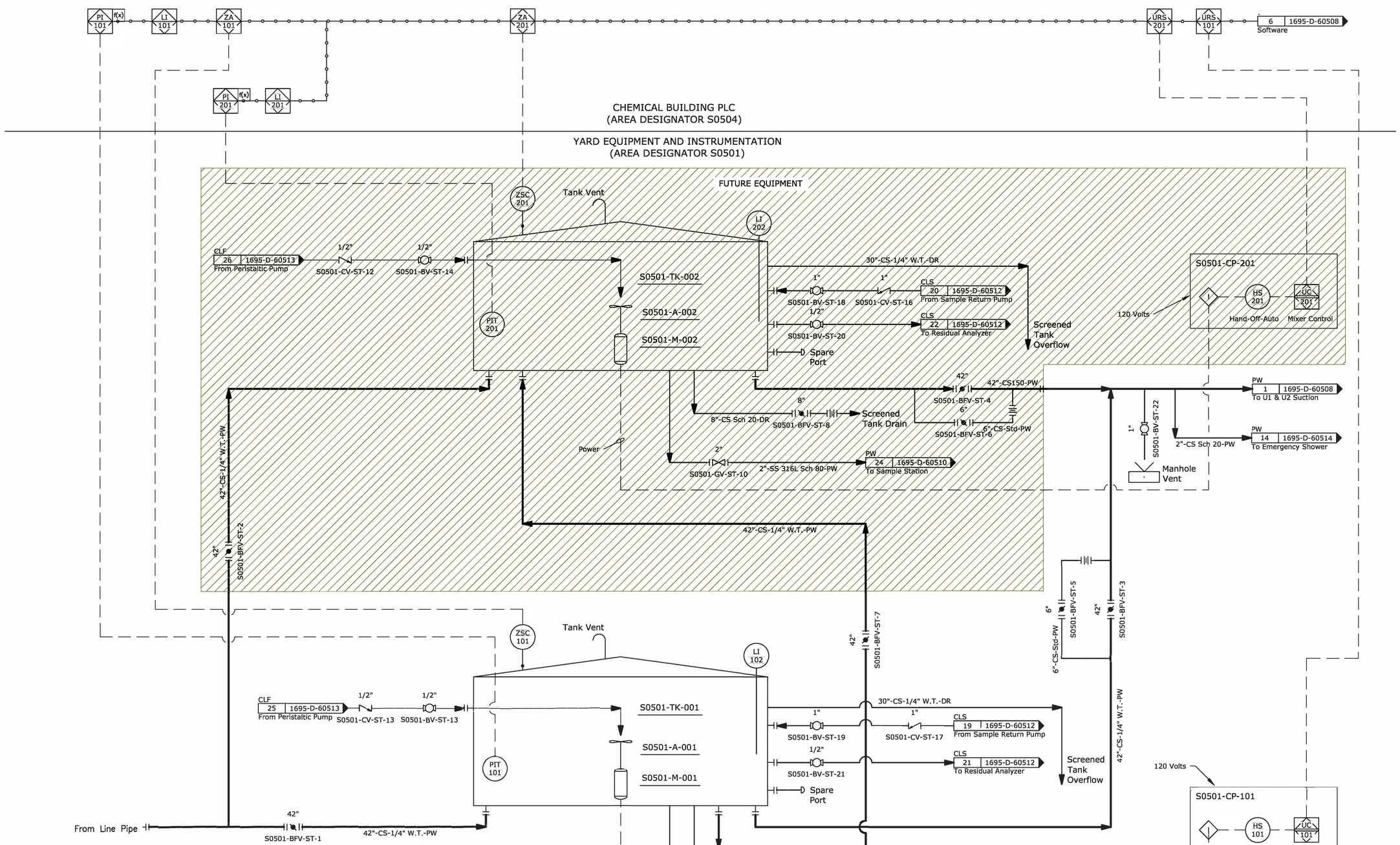

Yard Valve Operation (42 Inch)					
On Service Tank	S0501-BFV-ST-1	S0501-BFV-ST-2	S0501-BFV-ST-3	S0501-BFV-ST-4	S0501-BFV-ST-7
T1	Open	Closed	Open	Closed	Closed
T2	Closed	Open	Closed	Open	Closed
Series	Open	Closed	Closed	Open	Open
Parallel	Open	Open	Open	Open	Closed

ALWAYS THINK SAFETY

U.S. DEPARTMENT OF THE INTERIOR
BUREAU OF RECLAMATION
NAVAJO GALLUP WATER SUPPLY PROJECT
NEW MEXICO

SAN JUAN LATERAL

PUMPING PLANT NOS. 4 AND 7

Darryl Liscomb
DESIGNED
Darryl Liscomb
DRAWN
Amy Young
CHECKED
TECH. APPR. Elizabeth Morley, P.E.
APPROVED Jay Boggess
PEER REVIEWER - Manager, Electrical Design Group
DENVER, CO 2020-01-24

P&ID

PUMPING PLANT NO. 4:
TANK YARD

1695-D-60507

SHEET 1

LAST SAVED DATE
2020-01-17
LAST SAVED BY
DLISCOMB

CAD SYSTEM
Auto-CAD 23.0s
CAD FILENAME
1695-D-60507 PP4.DWG

RECLAMATION
Managing Water in the West

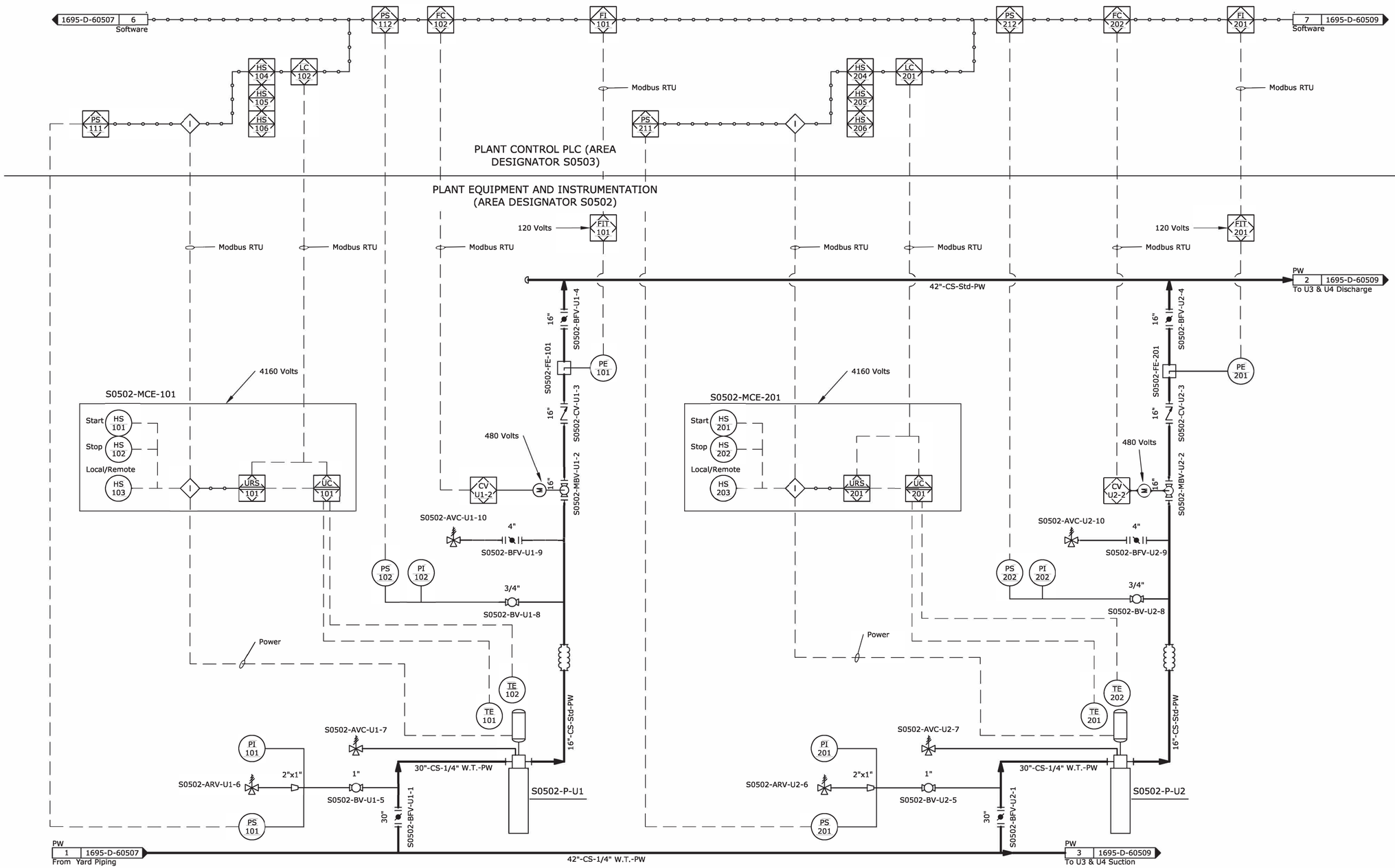

ALWAYS THINK SAFETY

U.S. DEPARTMENT OF THE INTERIOR
BUREAU OF RECLAMATION
NAVAJO GALLUP WATER SUPPLY PROJECT
NEW MEXICO

SAN JUAN LATERAL

PUMPING PLANT NOS. 4 AND 7

Darryl Liscomb
DESIGNED
Darryl Liscomb
DRAWN
Amy Young
CHECKED
TECH. APPR. Elizabeth Morley, P.E.
APPROVED Jay Boggess
PEER REVIEWER - Manager, Electrical Design Group
DENVER, CO 2020-01-24

P&ID

PUMPING PLANT NO. 4:
UNIT 1 AND UNIT 2

1695-D-60508

SHEET 1

LAST SAVED DATE
2020-01-23
LAST SAVED BY
DLISCOMB

CAD SYSTEM
AutoCAD 23.0s
CAD FILENAME
1695-D-60508 PP4 UNITS 1 & 2.DWG

RECLAMATION
Managing Water in the West

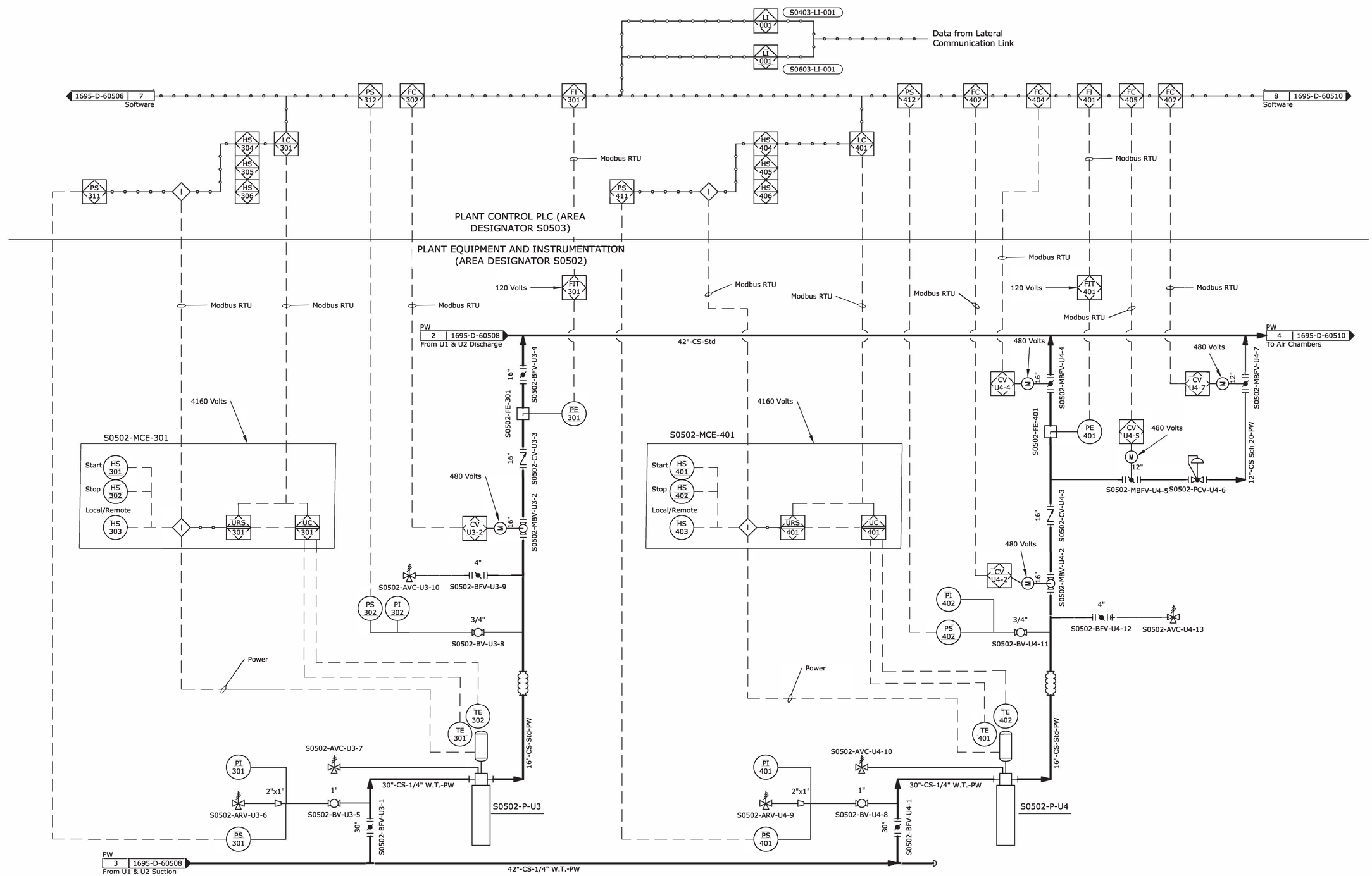

ALWAYS THINK SAFETY

U.S. DEPARTMENT OF THE INTERIOR
BUREAU OF RECLAMATION
NAVAJO GALLUP WATER SUPPLY PROJECT
NEW MEXICO

SAN JUAN LATERAL

PUMPING PLANT NOS. 4 AND 7

Darryl Liscomb
DESIGNED
Darryl Liscomb
DRAWN
Amy Young
CHECKED
TECH. APPR. Elizabeth Morley, P.E.
APPROVED Jay Boggess
PEER REVIEWER - Manager, Electrical Design Group
DENVER, CO 2020-01-24

P&ID

PUMPING PLANT NO. 4: UNIT 3 AND UNIT 4

1695-D-60509

SHEET 1

LAST SAVED DATE 2020-01-17
LAST SAVED BY DLISCOMB

CAD SYSTEM AutoCAD 23.0s
CAD FILENAME 1695-D-60509 PP4 UNITS 3 & 4.DWG

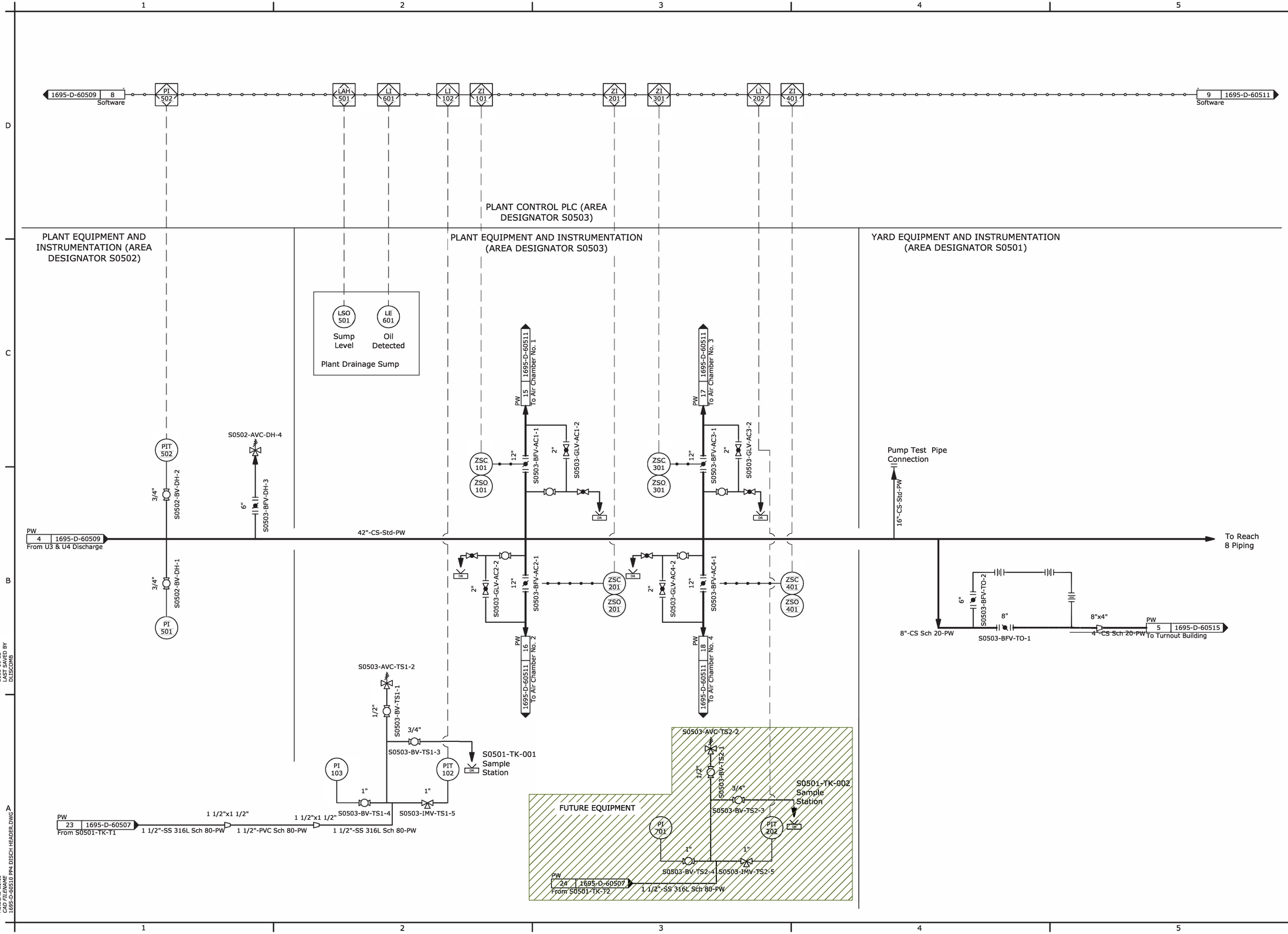

RECLAMATION
Managing Water in the West

ALWAYS THINK SAFETY

U.S. DEPARTMENT OF THE INTERIOR
BUREAU OF RECLAMATION
NAVAJO GALLUP WATER SUPPLY PROJECT
NEW MEXICO

SAN JUAN LATERAL

PUMPING PLANT NOS. 4 AND 7

Darryl Liscomb
DESIGNED
Darryl Liscomb
DRAWN
Amy Young
CHECKED
TECH. APPR. Elizabeth Morley, P.E.
APPROVED Jay Boggess
PEER REVIEWER - Manager, Electrical Design Group
DENVER, CO 2020-01-24

P&ID

PUMPING PLANT NO. 4: DISCHARGE HEADER

1695-D-60510

SHEET 1

LAST SAVED DATE 2021-01-23 LAST SAVED BY DLISCOMB

CAD SYSTEM AutoCAD 23.0s CAD FILENAME 1695-D-60510 PP4 DISCH HEADER.DWG

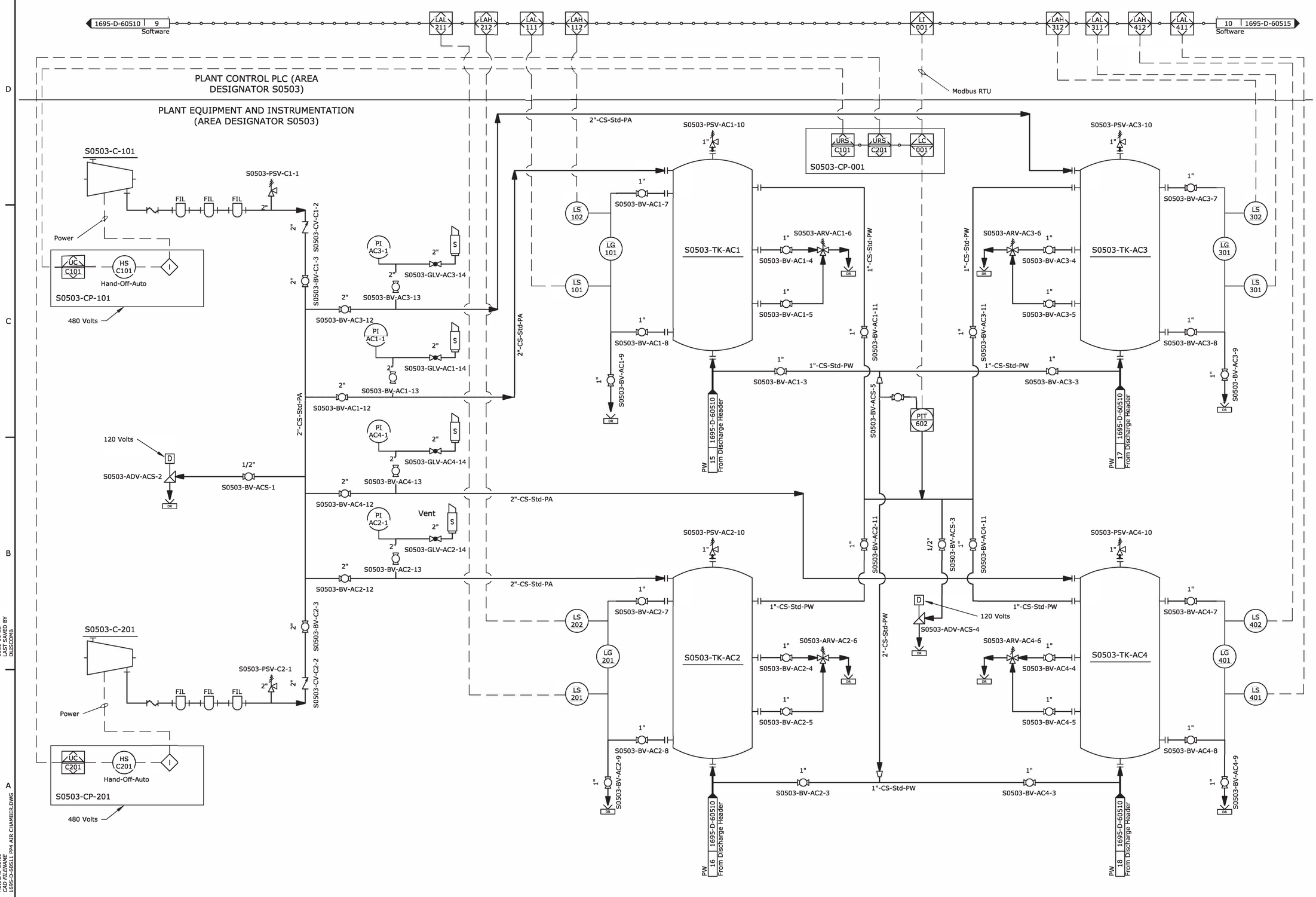

RECLAMATION
Managing Water in the West

ALWAYS THINK SAFETY

U.S. DEPARTMENT OF THE INTERIOR
BUREAU OF RECLAMATION
NAVAJO GALLUP WATER SUPPLY PROJECT
NEW MEXICO

SAN JUAN LATERAL

PUMPING PLANT NOS. 4 AND 7

Darryl Liscomb
DESIGNED

Darryl Liscomb
DRAWN

Rex Schlosser
CHECKED

TECH. APPR. Elizabeth Morley, P.E.

APPROVED Jay Boggess
PEER REVIEWER - Manager, Electrical Design Group

DENVER, CO 2020-01-24

P&ID

PUMPING PLANT NO. 4: AIR CHAMBERS

1695-D-60511

SHEET 1

LAST SAVED DATE 2020-01-22
LAST SAVED BY DLISCOMB

CAD SYSTEM AutoCAD 23.0s
CAD FILENAME 1695-D-60511 PP4 AIR CHAMBER.DWG

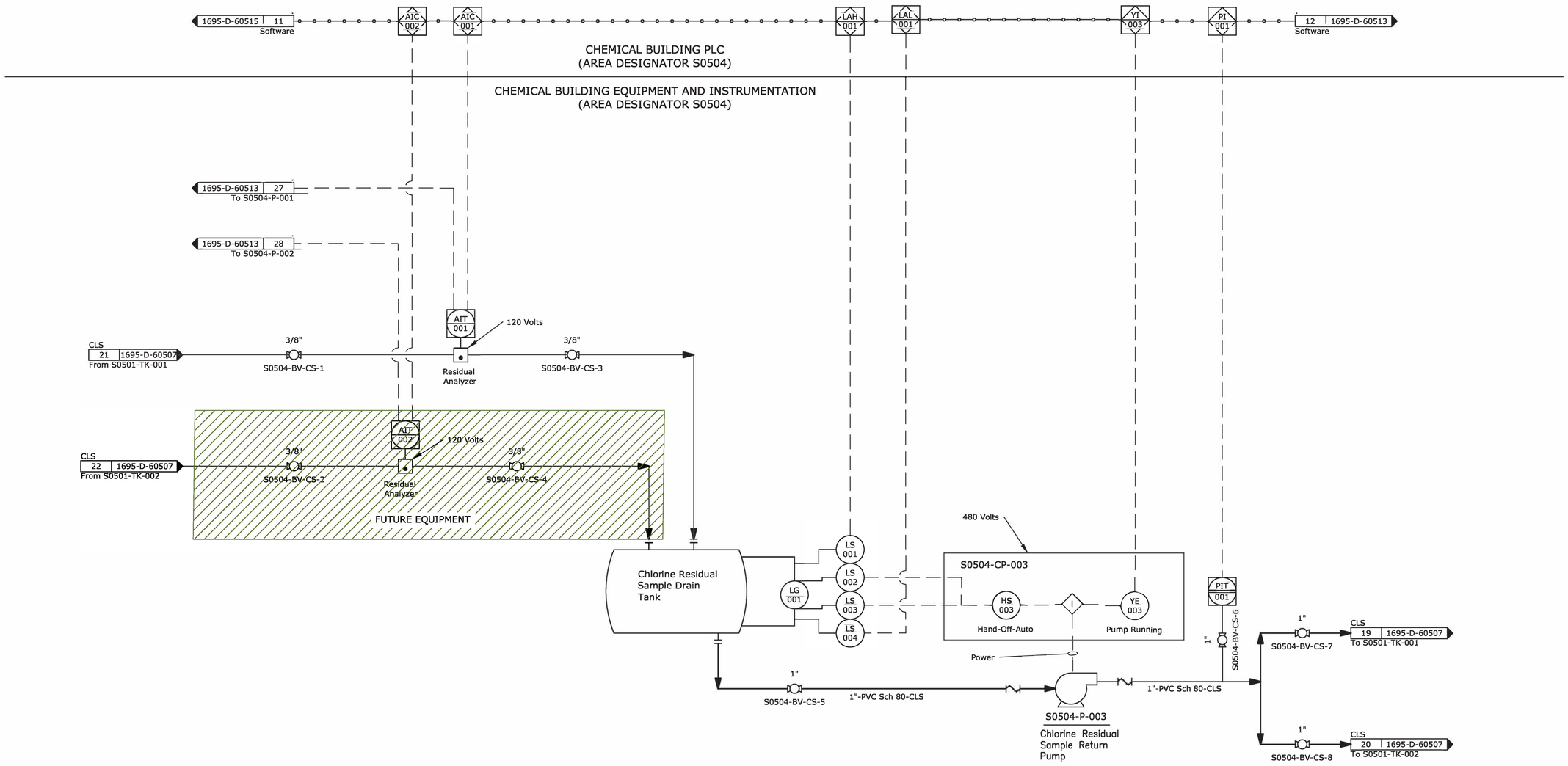

RECLAMATION
Managing Water in the West

ALWAYS THINK SAFETY

U.S. DEPARTMENT OF THE INTERIOR
BUREAU OF RECLAMATION
NAVAJO GALLUP WATER SUPPLY PROJECT
NEW MEXICO

SAN JUAN LATERAL

PUMPING PLANT NOS. 4 AND 7

Darryl Liscomb
DESIGNED
Darryl Liscomb
DRAWN
A. Kennedy
CHECKED
Elizabeth Morley P.E.
TECH. APPR. Elizabeth Morley, P.E.
APPROVED Jay Boggess
PEER REVIEWER - Manager, Electrical Design Group

DENVER, CO 2020-01-24

P&ID

PUMPING PLANT NO. 4: CHLORINE SAMPLE SYSTEM

1695-D-60512

SHEET 1

LAST SAVED DATE
2020-01-17
LAST SAVED BY
DLISCOMB

CAD SYSTEM
AutoCAD 23.1s
CAD FILENAME
1695-D-60512 PP4 CL2 SAMPLING.DWG

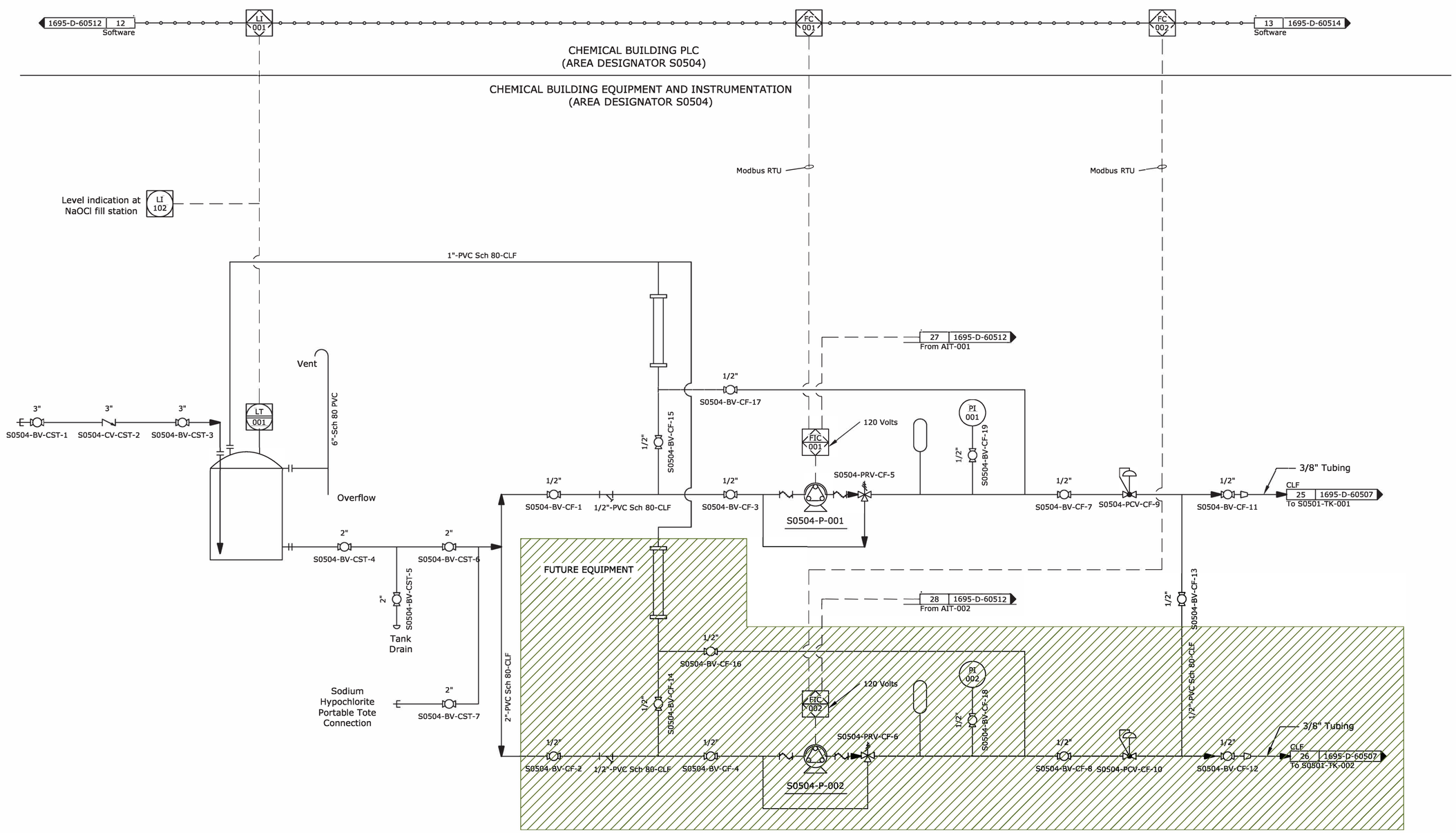

RECLAMATION
Managing Water in the West

ALWAYS THINK SAFETY

U.S. DEPARTMENT OF THE INTERIOR
BUREAU OF RECLAMATION
NAVAJO GALLUP WATER SUPPLY PROJECT
NEW MEXICO

SAN JUAN LATERAL

PUMPING PLANT NOS. 4 AND 7

Darryl Liscomb
DESIGNED
Darryl Liscomb
DRAWN
A. Kennedy
CHECKED
Elizabeth Morley P.E.
TECH. APPR. Elizabeth Morley, P.E.
Jay Boggess
APPROVED Jay Boggess
PEER REVIEWER - Manager, Electrical Design Group

DENVER, CO 2020-01-24

P&ID

PUMPING PLANT NO. 4:
SODIUM HYPOCHLORITE
FEED SYSTEM

1695-D-60513

SHEET 1

DATE AND TIME PLOTTED
PLOTTED BY
CAD SYSTEM
CAD FILENAME

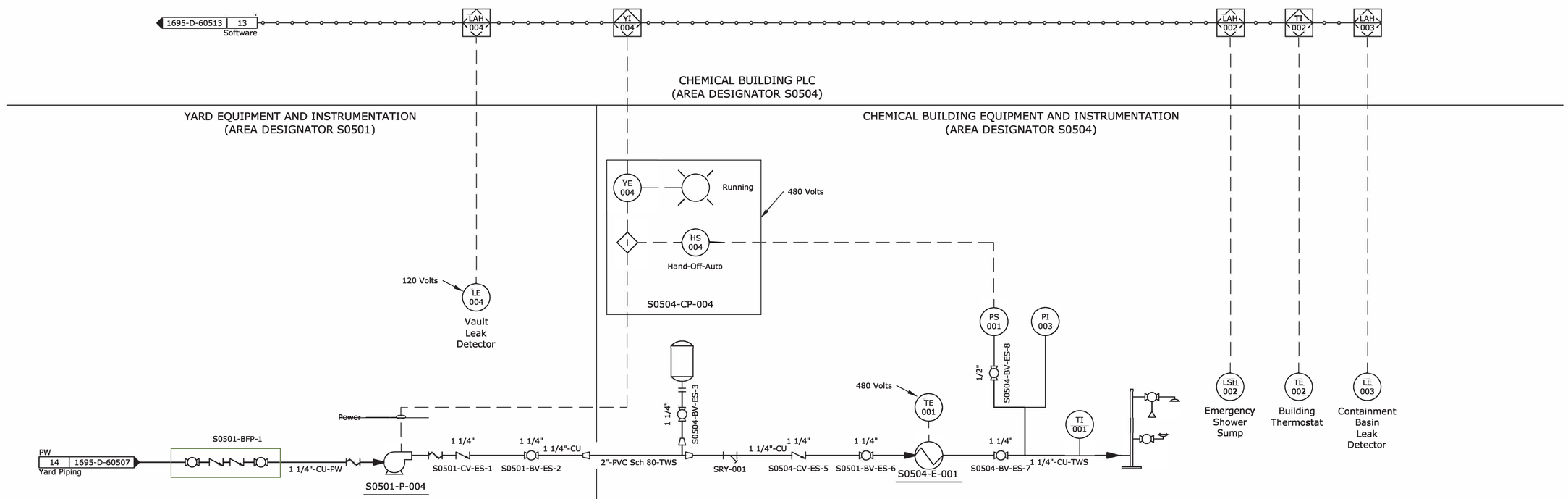

RECLAMATION
Managing Water in the West

ALWAYS THINK SAFETY

U.S. DEPARTMENT OF THE INTERIOR
BUREAU OF RECLAMATION
NAVAJO GALLUP WATER SUPPLY PROJECT
NEW MEXICO

SAN JUAN LATERAL

PUMPING PLANT NOS. 4 AND 7

Darryl Liscomb
DESIGNED
Darryl Liscomb
DRAWN
M. DiUbaldo
CHECKED
TECH. APPR. Elizabeth Morley, P.E.
APPROVED Jay Boggess
PEER REVIEWER - Manager, Electrical Design Group
DENVER, CO 2020-01-24

P&ID

PUMPING PLANT NO. 4:
EMERGENCY SHOWER
SUPPLY

1695-D-60514

SHEET 1

LAST SAVED DATE
2020-01-17
LAST SAVED BY
DLISCOMB

CAD SYSTEM
AutoCAD 23.1s
AUTOCAD FILENAME
1695-D-60514.DWG

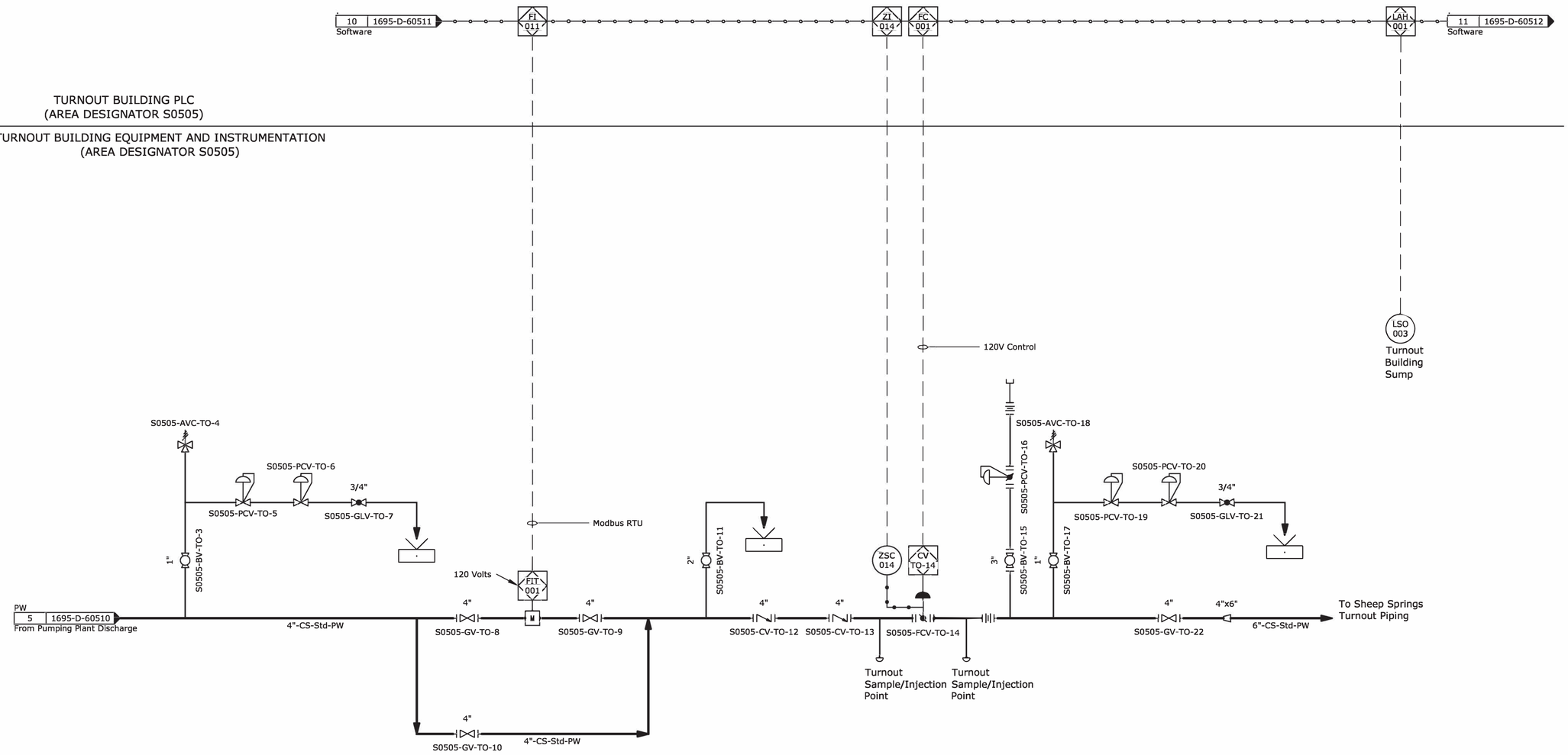

RECLAMATION
Managing Water in the West

ALWAYS THINK SAFETY

U.S. DEPARTMENT OF THE INTERIOR
BUREAU OF RECLAMATION
NAVAJO GALLUP WATER SUPPLY PROJECT
NEW MEXICO

SAN JUAN LATERAL

PUMPING PLANT NOS. 4 AND 7

Darryl Liscomb
DESIGNED

Darryl Liscomb
DRAWN

Amy Young
CHECKED

Elizabeth Morley P.E.
TECH. APPR. Elizabeth Morley, P.E.

APPROVED Jay Boggess
PEER REVIEWER - Manager, Electrical Equipment Group

DENVER, CO 2020-01-24

P&ID

PUMPING PLANT NO. 4:
TURNOUT BUILDING

1695-D-60515

SHEET 1

LAST SAVED DATE
2020-01-21
LAST SAVED BY
DLISCOMB

CAD SYSTEM
AutoCAD 23.0s
CAD FILENAME
1695-D-60515 PP4 TO BLDG.DWG

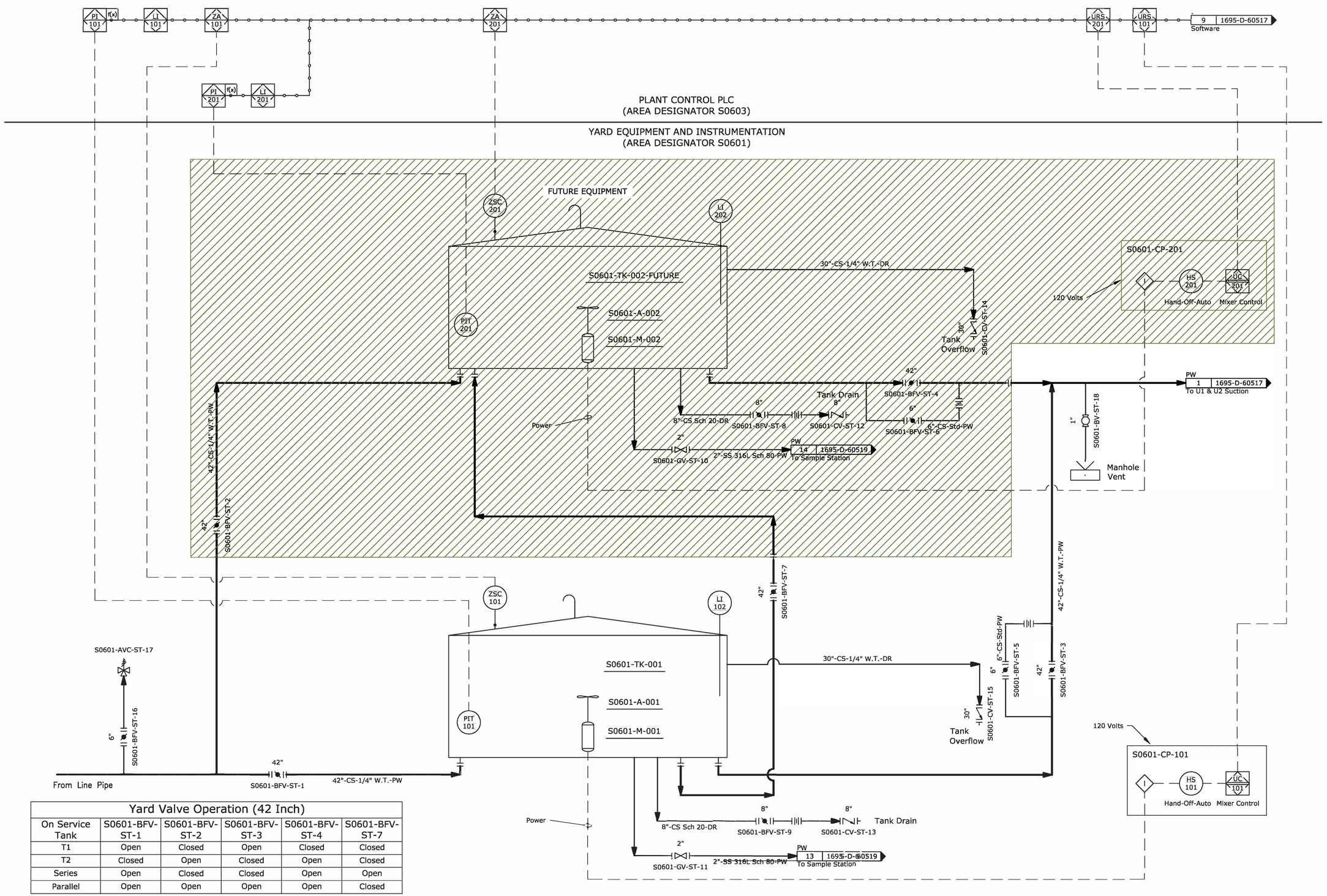

Yard Valve Operation (42 Inch)					
On Service Tank	S0601-BFV-ST-1	S0601-BFV-ST-2	S0601-BFV-ST-3	S0601-BFV-ST-4	S0601-BFV-ST-7
T1	Open	Closed	Open	Closed	Closed
T2	Closed	Open	Closed	Open	Closed
Series	Open	Closed	Closed	Open	Open
Parallel	Open	Open	Open	Open	Closed

RECLAMATION
Managing Water in the West

ALWAYS THINK SAFETY

U.S. DEPARTMENT OF THE INTERIOR
BUREAU OF RECLAMATION
NAVAJO GALLUP WATER SUPPLY PROJECT
NEW MEXICO

SAN JUAN LATERAL

PUMPING PLANT NOS. 4 AND 7

Darryl Liscomb
DESIGNED
Darryl Liscomb
DRAWN
Amy Young
CHECKED
TECH. APPR. Elizabeth Morley, P.E.
APPROVED Jay Boggess
PEER REVIEWER - Manager, Electrical Design Group
DENVER, CO 2020-01-24

P&ID

PUMPING PLANT NO. 7:
TANK YARD

1695-D-60516

SHEET 1

LAST SAVED DATE
2020-01-17
LAST PLOTTED BY
DLISCOMB

CAD SYSTEM
AutoCAD T23.0s
CAD FILENAME
1695-D-60516 PP7 TANK YARD.DWG

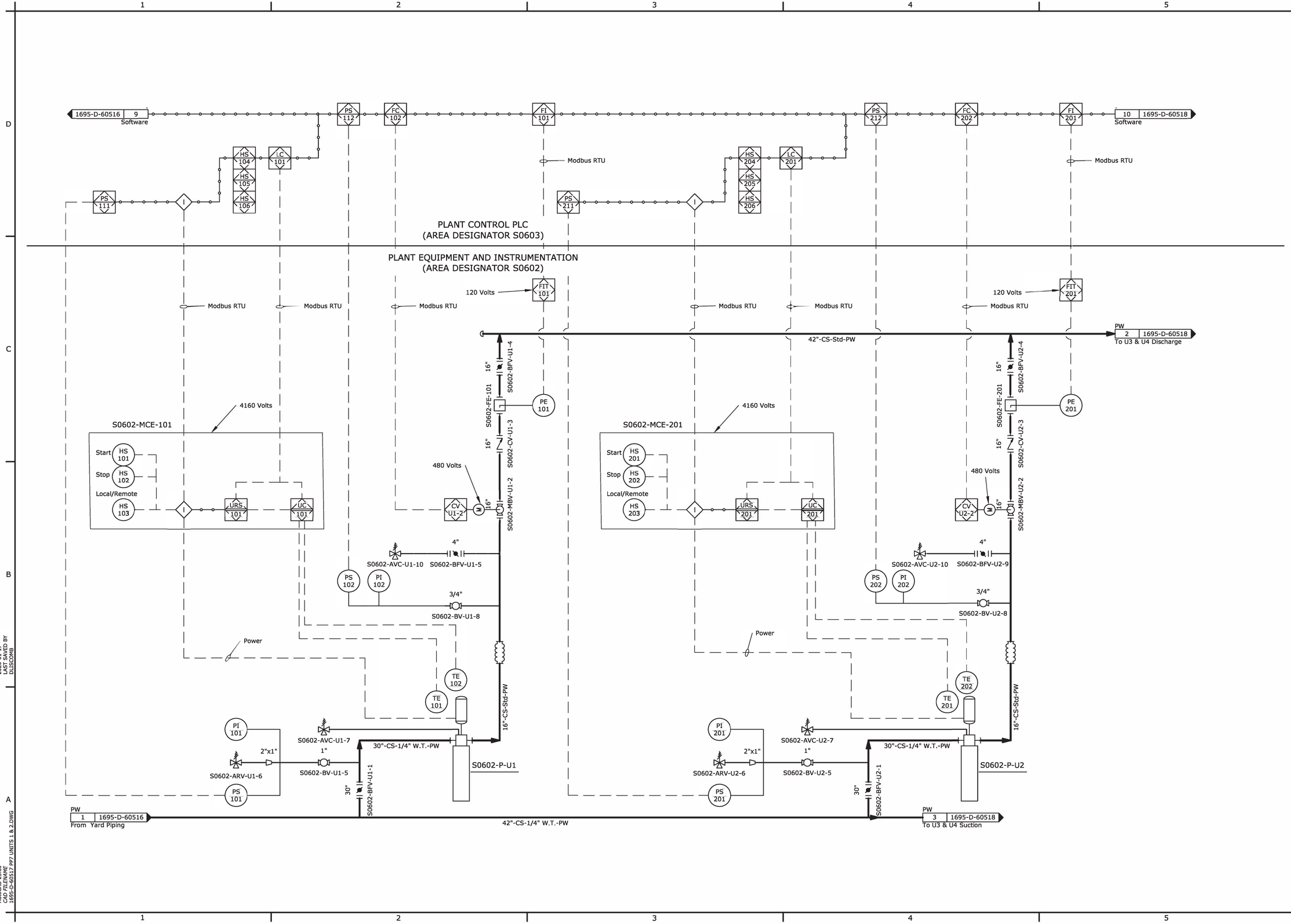

RECLAMATION
Managing Water in the West

ALWAYS THINK SAFETY

U.S. DEPARTMENT OF THE INTERIOR
BUREAU OF RECLAMATION
NAVAJO GALLUP WATER SUPPLY PROJECT
NEW MEXICO

SAN JUAN LATERAL

PUMPING PLANT NOS. 4 AND 7

Darryl Liscomb
DESIGNED
Darryl Liscomb
DRAWN
Amy Young
CHECKED
TECH. APPR. Elizabeth Morley, P.E.
APPROVED Jay Boggess
PEER REVIEWER - Manager, Electrical Design Group
DENVER, CO 2020-01-24

P&ID

PUMPING PLANT NO. 7:
UNIT 1 AND UNIT 2

1695-D-60517

SHEET 1

LAST SAVED DATE
2020-01-17
LAST SAVED BY
DLISCOMB

CAD SYSTEM
AutoCAD 23.0s
CAD FILENAME
1695-D-60517 PP7 UNITS 1 & 2.DWG

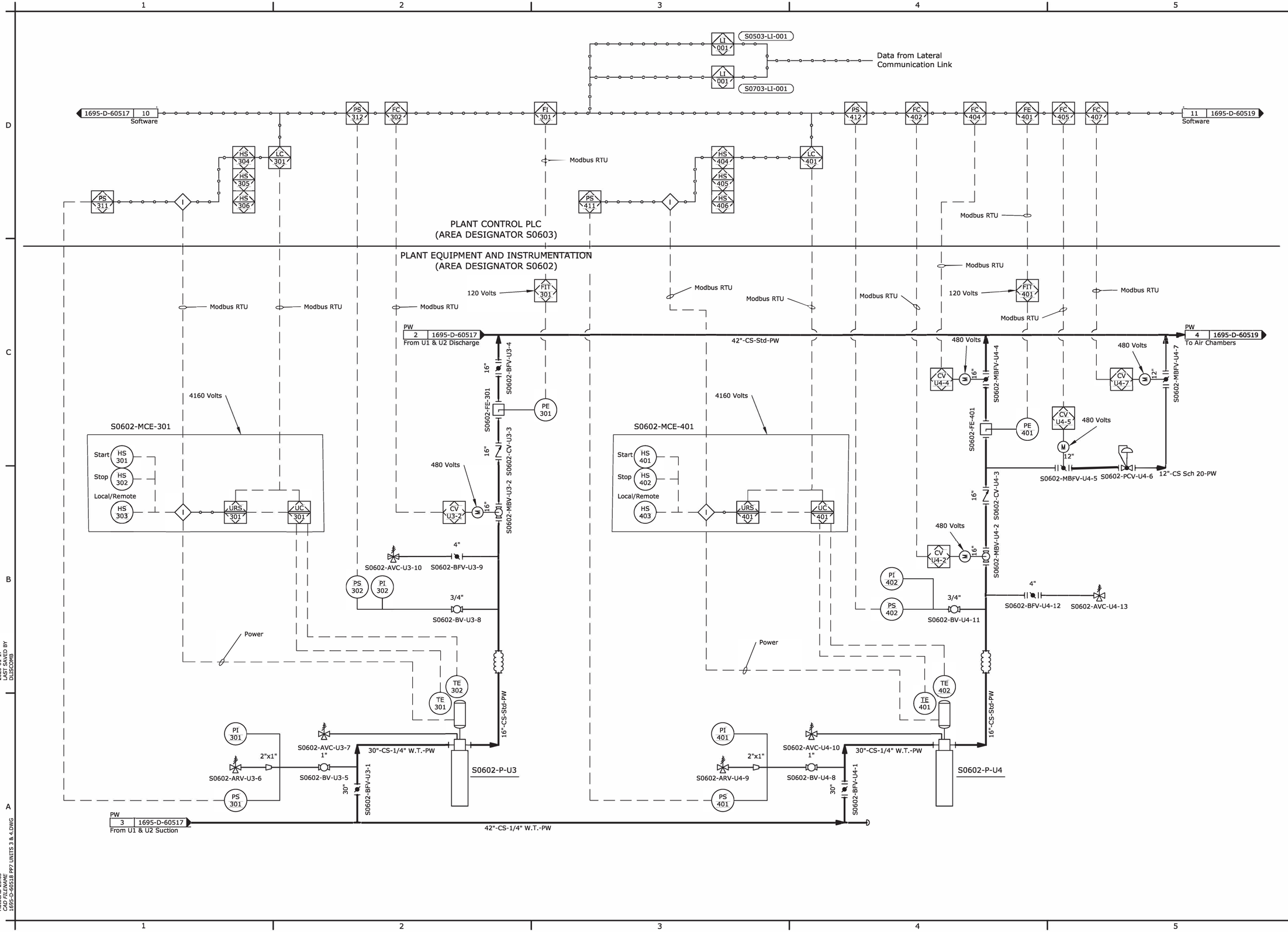

RECLAMATION
Managing Water in the West

ALWAYS THINK SAFETY

U.S. DEPARTMENT OF THE INTERIOR
BUREAU OF RECLAMATION
NAVAJO GALLUP WATER SUPPLY PROJECT
NEW MEXICO

SAN JUAN LATERAL

PUMPING PLANT NOS. 4 AND 7

Darryl Liscomb
DESIGNED
Darryl Liscomb
DRAWN
Amy Young
CHECKED
TECH. APPR. Elizabeth Morley, P.E.
APPROVED Jay Boggess
PEER REVIEWER - Manager, Electrical Design Group
DENVER, CO 2020-01-24

P&ID

PUMPING PLANT NO. 7:
UNIT 3 AND UNIT 4

1695-D-60518

SHEET 1

LAST SAVED DATE
2020-01-17
LAST SAVED BY
DLISCOMB

CAD SYSTEM
AutoCAD 23.1s
CAD FILENAME
1695-D-60518 PP7 UNITS 3 & 4.DWG

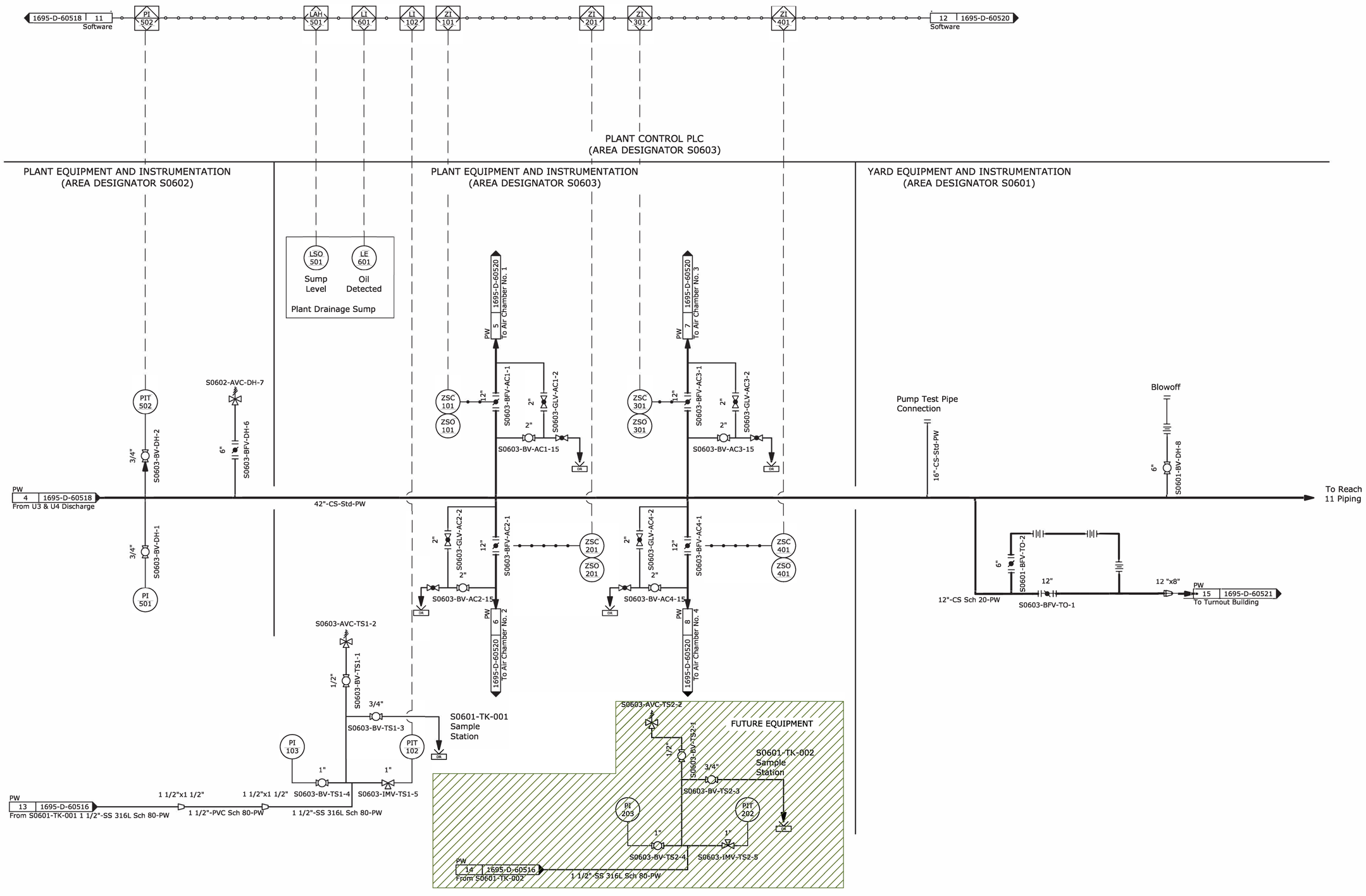

RECLAMATION
Managing Water in the West

ALWAYS THINK SAFETY

U.S. DEPARTMENT OF THE INTERIOR
BUREAU OF RECLAMATION
NAVAJO GALLUP WATER SUPPLY PROJECT
NEW MEXICO

SAN JUAN LATERAL

PUMPING PLANT NOS. 4 AND 7

Darryl Liscomb
DESIGNED
Darryl Liscomb
DRAWN
Amy Young
CHECKED
TECH. APPR. Elizabeth Morley, P.E.
APPROVED Jay Boggess
PEER REVIEWER - Manager, Electrical Design Group

DENVER, CO 2020-01-24

P&ID

PUMPING PLANT NO. 7:
DISCHARGE HEADER

1695-D-60519

SHEET 1

LAST SAVED DATE
2020-01-22
LAST SAVED BY
DLISCOMB

CAD SYSTEM
AutoCAD 23.0s
CAD FILENAME
1695-D-60519 PP7 DISCH HEADER.DWG

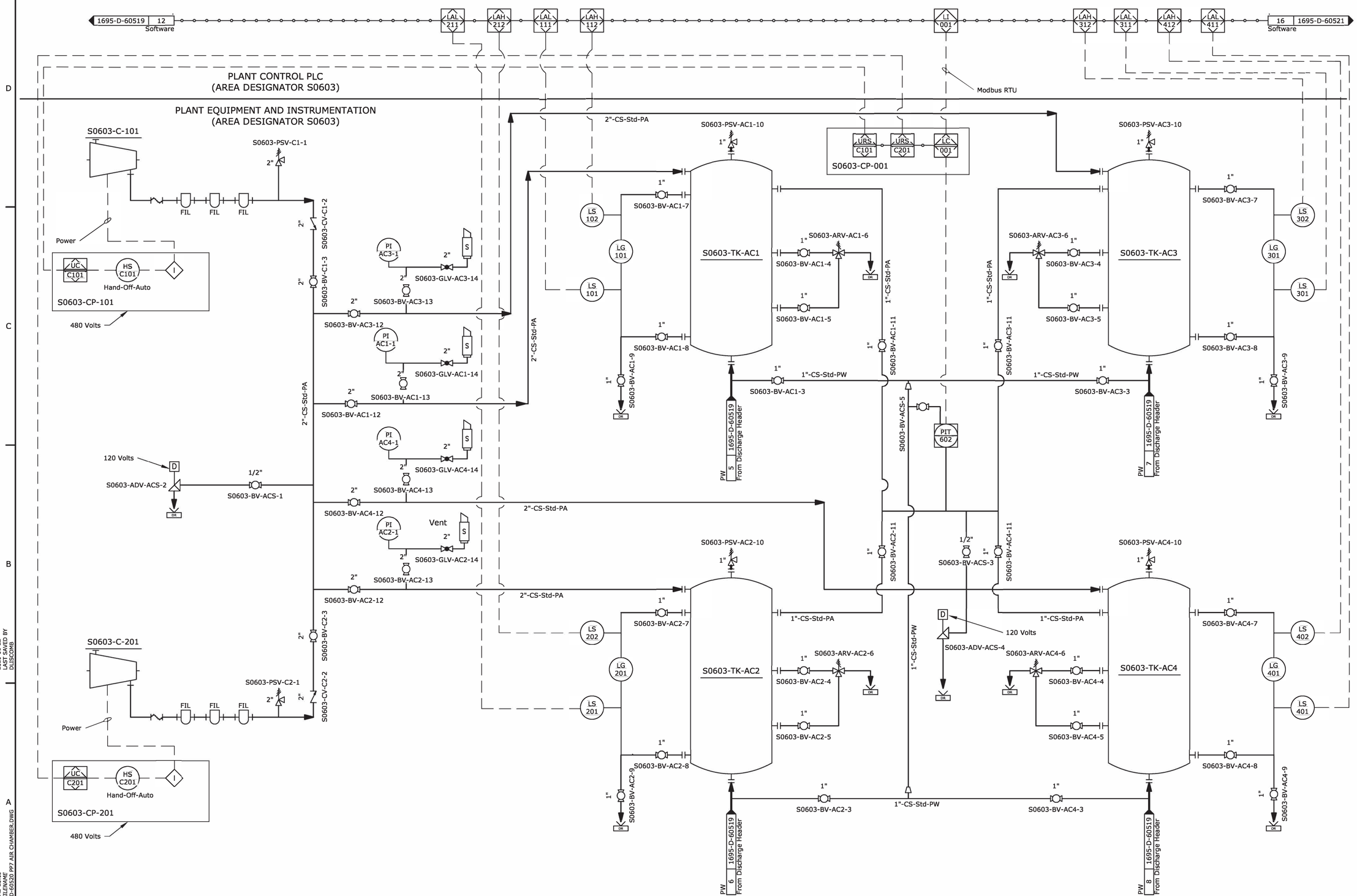

LAST SAVED DATE 2020-01-22
LAST SAVED BY DLISCOMB

CAD SYSTEM AutoCAD 23.0s
CAD FILENAME 1695-D-60520 PP7 AIR CHAMBER.DWG

RECLAMATION
Managing Water in the West

ALWAYS THINK SAFETY

U.S. DEPARTMENT OF THE INTERIOR
BUREAU OF RECLAMATION
NAVAJO GALLUP WATER SUPPLY PROJECT
NEW MEXICO

SAN JUAN LATERAL

PUMPING PLANT NOS. 4 AND 7

Darryl Liscomb
DESIGNED
Darryl Liscomb
DRAWN
Rex Schlosser
CHECKED
TECH. APPR. Elizabeth Morley, P.E.
APPROVED Jay Boggess
PEER REVIEWER - Manager, Electrical Design Group
DENVER, CO 2020-01-24

P&ID

PUMPING PLANT NO. 7:
AIR CHAMBERS

1695-D-60520

SHEET 1

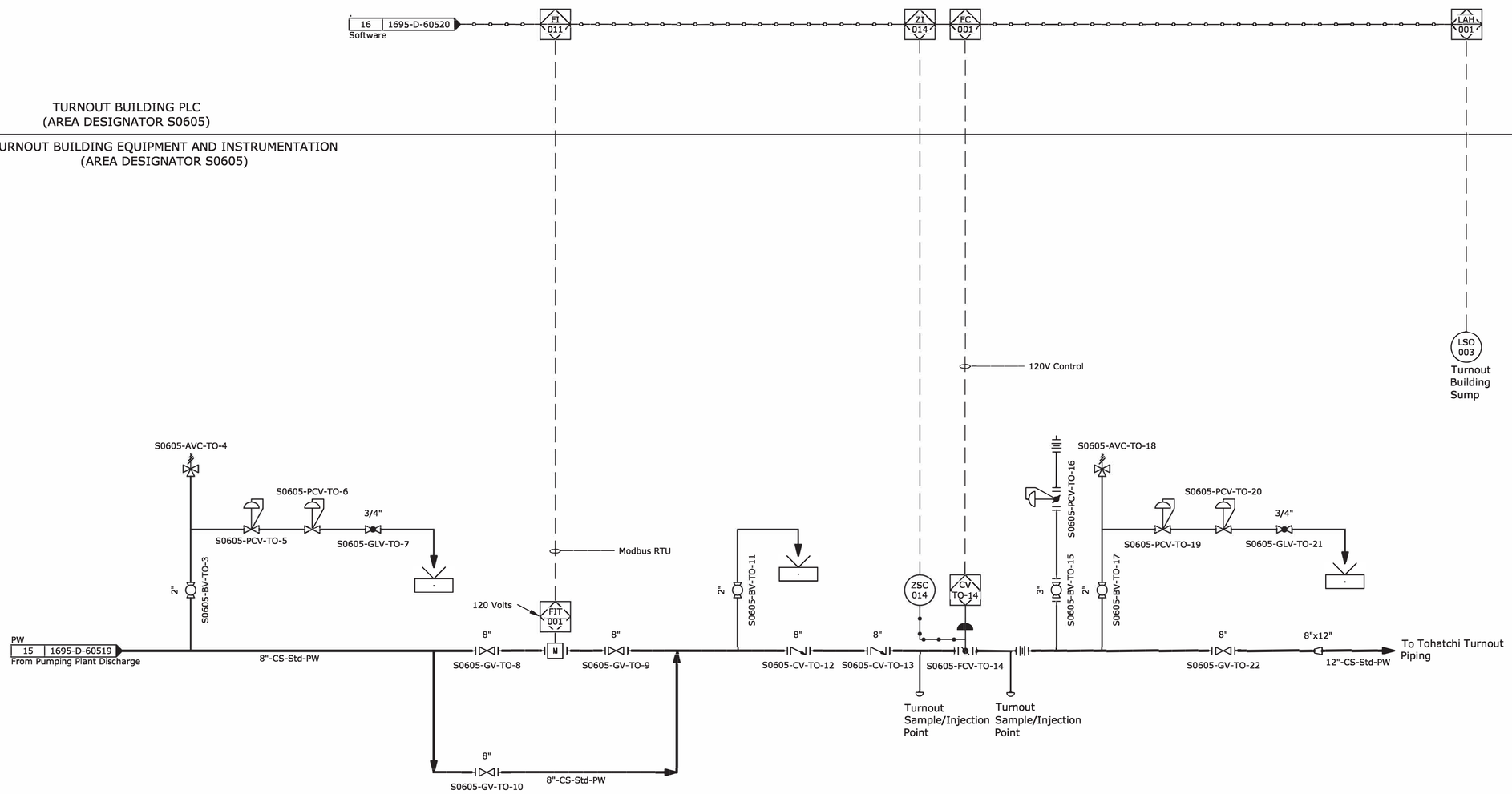

RECLAMATION
Managing Water in the West

ALWAYS THINK SAFETY

U.S. DEPARTMENT OF THE INTERIOR
BUREAU OF RECLAMATION
NAVAJO GALLUP WATER SUPPLY PROJECT
NEW MEXICO

SAN JUAN LATERAL

PUMPING PLANT NOS. 4 AND 7

Darryl Liscomb
DESIGNED
Darryl Liscomb
DRAWN
Amy Young
CHECKED
TECH. APPR. Elizabeth Morley, P.E.
APPROVED Jay Boggess
PEER REVIEWER - Manager, Electrical Equipment Group

DENVER, CO 2020-01-24

P&ID

PUMPING PLANT NO. 7:
TURNOUT BUILDING

1695-D-60521

SHEET 1

LAST SAVED DATE
2020-01-24
LAST SAVED BY
DLISCOMB

CAD SYSTEM
AutoCAD 2018
CAD FILENAME
1695-D-60521 PP7 TO BLDG.DWG

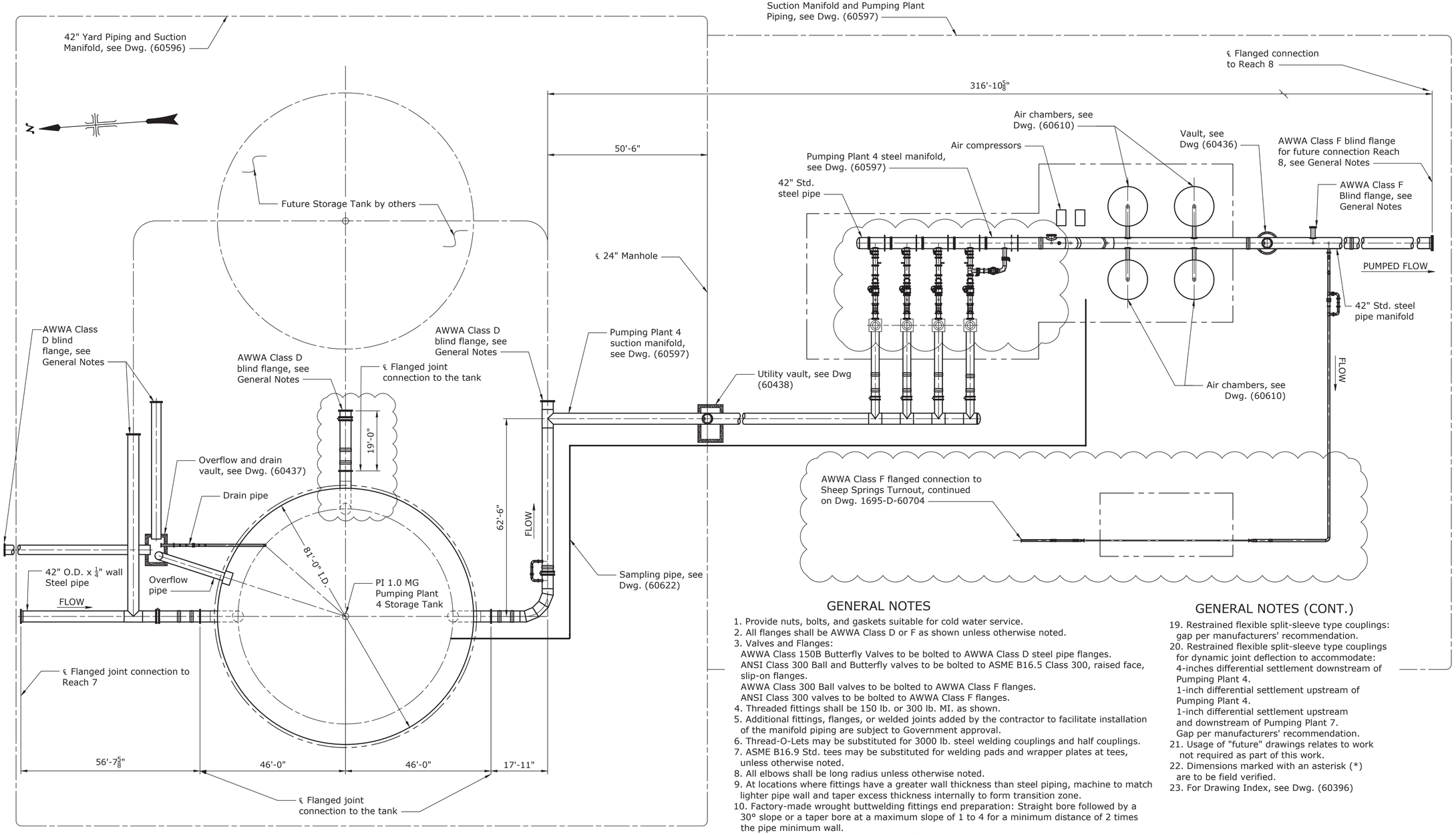

PUMPING PLANT 4 PLAN

(PUMPING PLANT 4 AND STORAGE TANK)

GENERAL NOTES

1. Provide nuts, bolts, and gaskets suitable for cold water service.
2. All flanges shall be AWWA Class D or F as shown unless otherwise noted.
3. Valves and Flanges:
   AWWA Class 150B Butterfly Valves to be bolted to AWWA Class D steel pipe flanges.
   ANSI Class 300 Ball and Butterfly valves to be bolted to ASME B16.5 Class 300, raised face, slip-on flanges.
   AWWA Class 300 Ball valves to be bolted to AWWA Class F flanges.
   ANSI Class 300 valves to be bolted to AWWA Class F flanges.
4. Threaded fittings shall be 150 lb. or 300 lb. MI. as shown.
5. Additional fittings, flanges, or welded joints added by the contractor to facilitate installation of the manifold piping are subject to Government approval.
6. Thread-O-Lets may be substituted for 3000 lb. steel welding couplings and half couplings.
7. ASME B16.9 Std. tees may be substituted for welding pads and wrapper plates at tees, unless otherwise noted.
8. All elbows shall be long radius unless otherwise noted.
9. At locations where fittings have a greater wall thickness than steel piping, machine to match lighter pipe wall and taper excess thickness internally to form transition zone.
10. Factory-made wrought buttwelding fittings end preparation: Straight bore followed by a 30° slope or a taper bore at a maximum slope of 1 to 4 for a minimum distance of 2 times the pipe minimum wall.
11. Welding symbols apply to the joints of all members of similar identification.
12. All fillet welds shall be returned.
13. Pipe couplings: multi-segmented (2 or more piece) split sleeve-type or grooved-end type as shown.
14. Hydrostatic test pressures:
    Pumping Plants 4 and 7 pump discharge steel manifold to trunnion mounted ball valve: 675 psig.
    Pumping Plant 4 discharge manifold and turnouts: 402 psig
    Pumping Plant 7 discharge manifold and turnouts: 450 psig
    Pumping Plant 4 and Pumping Plant 7 suction manifolds: 32 psig
15. Sheep Springs Turnout and Tohatchi Turnout designed to be filled at 3 cfs maximum.
16. AWWA Class D Flange isolation kit to be provided for flanged connection to the water storage tank if steel tank option is selected. Location and design subject to Government approval.
17. ASME elliptical dished heads may be substituted for blind flanges. See detail, Dwg. (60609).
18. Use epoxy grout for flange supports as shown on 40-D-7018.

GENERAL NOTES (CONT.)

19. Restrained flexible split-sleeve type couplings: gap per manufacturers' recommendation.
20. Restrained flexible split-sleeve type couplings for dynamic joint deflection to accommodate:
    4-inches differential settlement downstream of Pumping Plant 4.
    1-inch differential settlement upstream of Pumping Plant 4.
    1-inch differential settlement upstream and downstream of Pumping Plant 7.
    Gap per manufacturers' recommendation.
21. Usage of "future" drawings relates to work not required as part of this work.
22. Dimensions marked with an asterisk (*) are to be field verified.
23. For Drawing Index, see Dwg. (60396)

STANDARD DRAWINGS

FLANGE SUPPORT _____ 40-D-7018
MANHOLES _____ 40-D-6137

REFERENCE DRAWINGS

PUMPING PLANT NO. 4 SITE AND GRADING PLAN_____1695-D-60403
PUMPING PLANT NO. 7 SITE AND GRADING PLAN_____1695-D-60406

RECLAMATION
Managing Water in the West

ALWAYS THINK SAFETY

U.S. DEPARTMENT OF THE INTERIOR
BUREAU OF RECLAMATION
NAVAJO-GALLUP WATER SUPPLY PROJECT
NEW MEXICO

SAN JUAN LATERAL
PUMPING PLANT NOS. 4 AND 7

REV NO			
2	2020-01-21	Stephen, Ryan D P.E.	D GENERAL REVISIONS
1	2019-10-18	Schlundt, Kent C	D GENERAL REVISIONS

Kent Schlundt
DESIGNED
Rex Schlosser
DRAWN
Kent Schlundt
CHECKED
Adams, Lucas P.E.
TECH. APPR.
Hummel, Terry L
APPROVED
ADMIN APPROVAL - Mgr Hydr Equip
DENVER, CO 2018-08-23

PUMPING PLANT NO. 4

STEEL MANIFOLD AND STORAGE TANK - PLAN

1695-D-60595

SHEET 1

Released

DATE AND TIME PLOTTED NOVEMBER 18, 2019 08:01
PLOTTED BY RSCHLOSSER

CAD SYSTEM AutoCAD Rel. 22.0s
CAD FILENAME 1695-D-60595-RD-1.DWG

RECLAMATION
Managing Water in the West

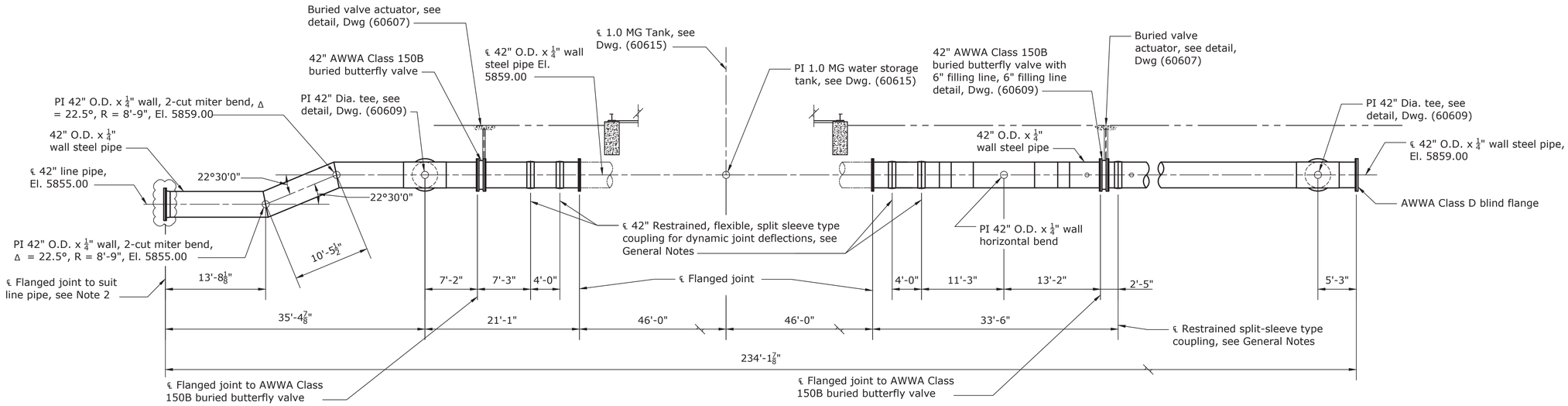

A SECTION
1/8"=1'

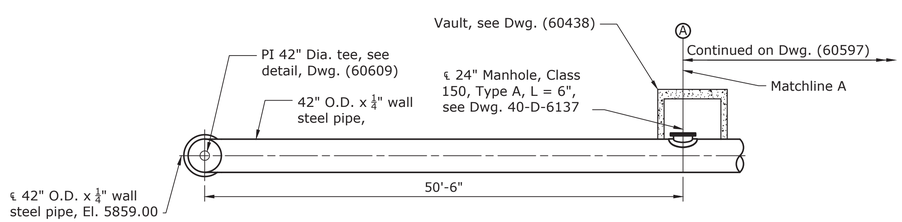

B SECTION
1/8"=1'

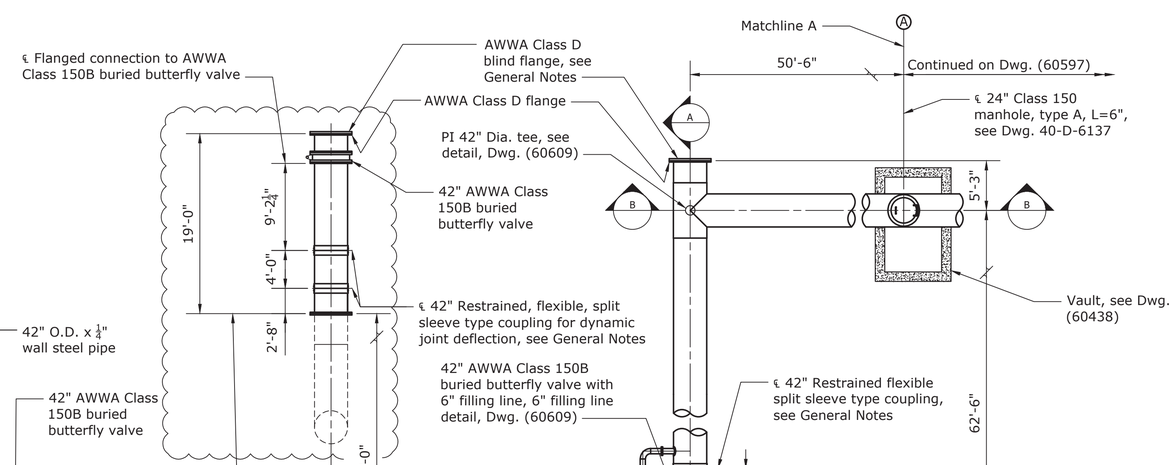

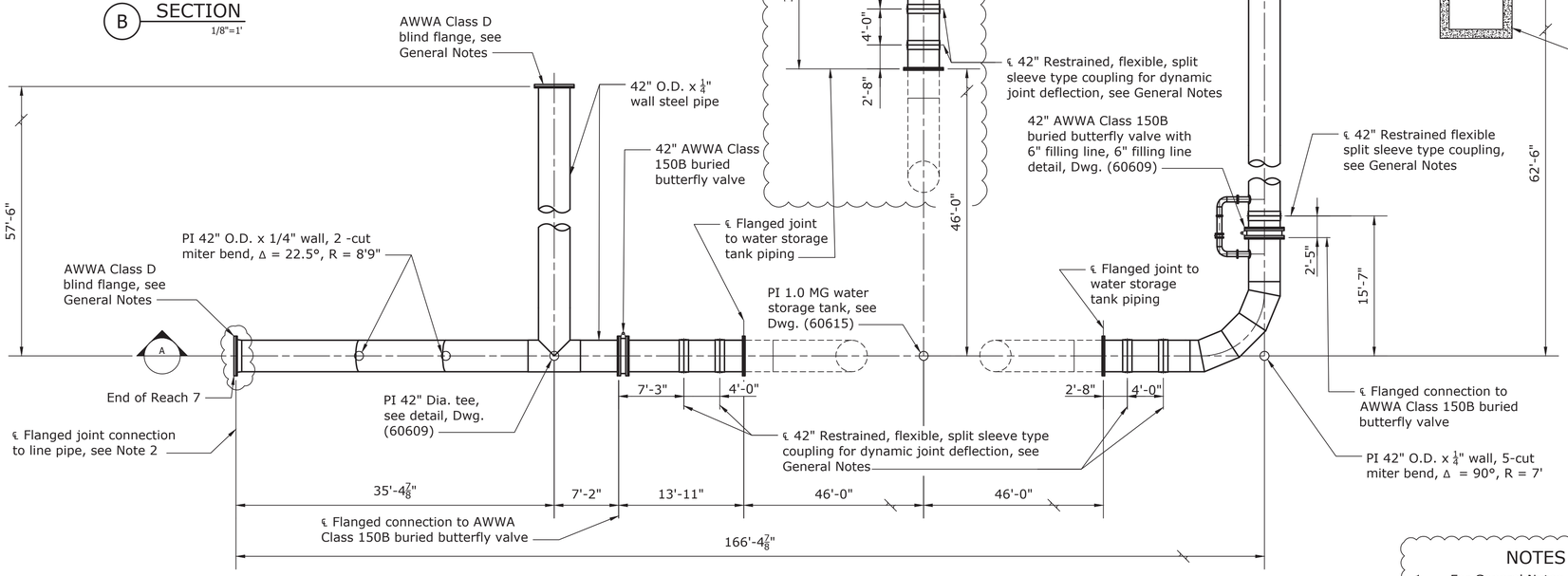

42 INCH YARD PIPING AND SUCTION MANIFOLD PLAN

(60595)

NOTES

1. For General Notes, see Dwg. (60595).
2. Provide fabricated steel reducer to match yard piping ID to conveyance pipe ID in accordance with AWWA C208.

ALWAYS THINK SAFETY

U.S. DEPARTMENT OF THE INTERIOR
BUREAU OF RECLAMATION
NAVAJO-GALLUP WATER SUPPLY PROJECT
NEW MEXICO

SAN JUAN LATERAL

PUMPING PLANT NOS. 4 AND 7

REV NO	DATE	DESCRIPTION	BY
1	2020-01-27	GENERAL REVISIONS	Stephen, Ryan D P.E.

Kent Schlundt
DESIGNED
Rex Schlosser
DRAWN
Kent Schlundt
CHECKED
Adams, Lucas P.E.
TECH. APPR.
Hummel, Terry L
APPROVED
ADMIN APPROVAL - Mgr Hydr Equip

DENVER, CO 2018-08-23

PUMPING PLANT NO. 4

STEEL MANIFOLD - PLAN AND SECTIONS

1695-D-60596

SHEET 2

Released

DATE AND TIME PLOTTED NOVEMBER 12, 2019 07:51
PLOTTED BY RSCHLOSSER

CAD SYSTEM AutoCAD Rel. 22.0s
CAD FILENAME 1695-D-60596-AD-1.DWG

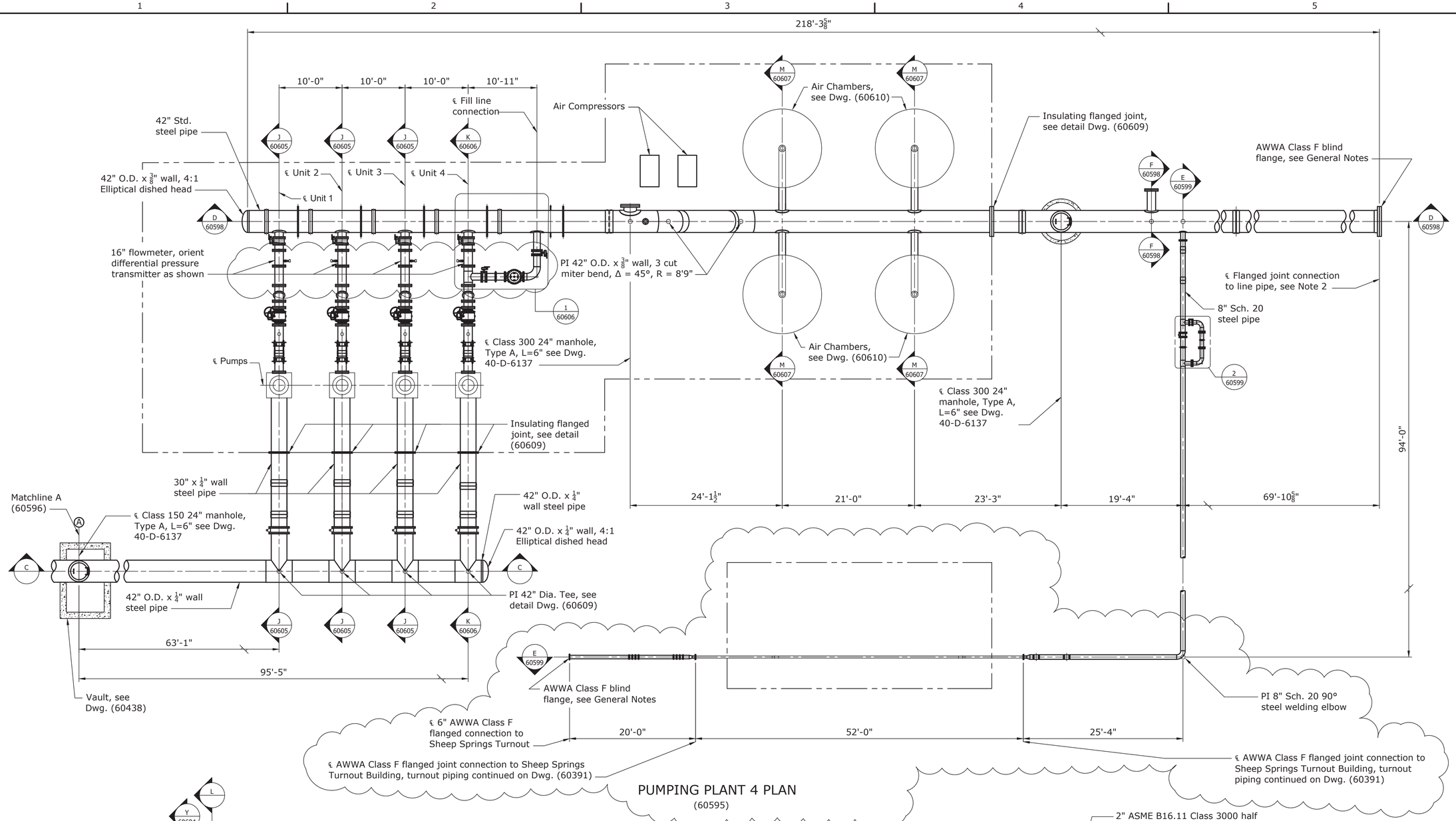

PUMPING PLANT 4 PLAN
(60595)

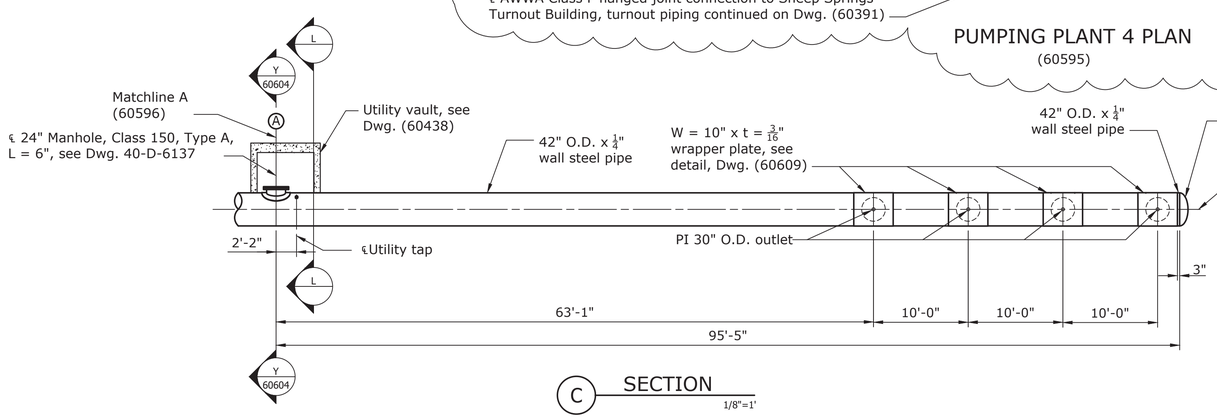

C SECTION
1/8"=1'

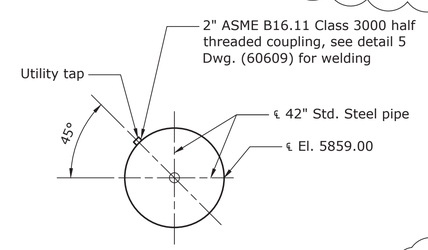

L SECTION
(MANHOLE NOT SHOWN)
3/8"=1'

NOTES

1. For General Notes, see Dwg. (60595)
2. Provide fabricated steel reducer to match yard piping ID to conveyance pipe ID in accordance with AWWA C208.

RECLAMATION
Managing Water in the West

ALWAYS THINK SAFETY

U.S. DEPARTMENT OF THE INTERIOR
BUREAU OF RECLAMATION
NAVAJO-GALLUP WATER SUPPLY PROJECT
NEW MEXICO

SAN JUAN LATERAL
PUMPING PLANT NOS. 4 AND 7

REV NO	DATE	BY	REVISIONS
1	2020-01-21	Stephen, Ryan D P.E.	0 GENERAL REVISIONS

Released

DATE AND TIME PLOTTED Not Plotted
PLOTTED BY Not Plotted
CAD SYSTEM AUTOCAD
CAD FILENAME UNKNOWN

Kent Schlundt
DESIGNED
Rex Schlosser
DRAWN
Kent Schlundt
CHECKED
Adams, Lucas P.E.
TECH. APPR.
Hummel, Terry L
APPROVED
ADMIN APPROVAL - Mgr Hydr Equip

DENVER, CO 2018-08-23

PUMPING PLANT NO. 4

STEEL MANIFOLD - PLAN AND SECTIONS

1695-D-60597

SHEET 3

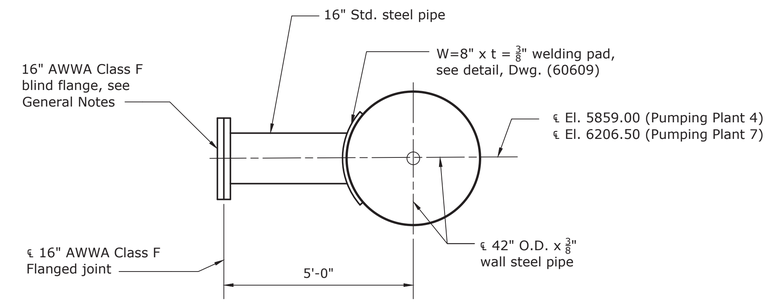

F SECTION (60597, 60602) 1/2"=1'

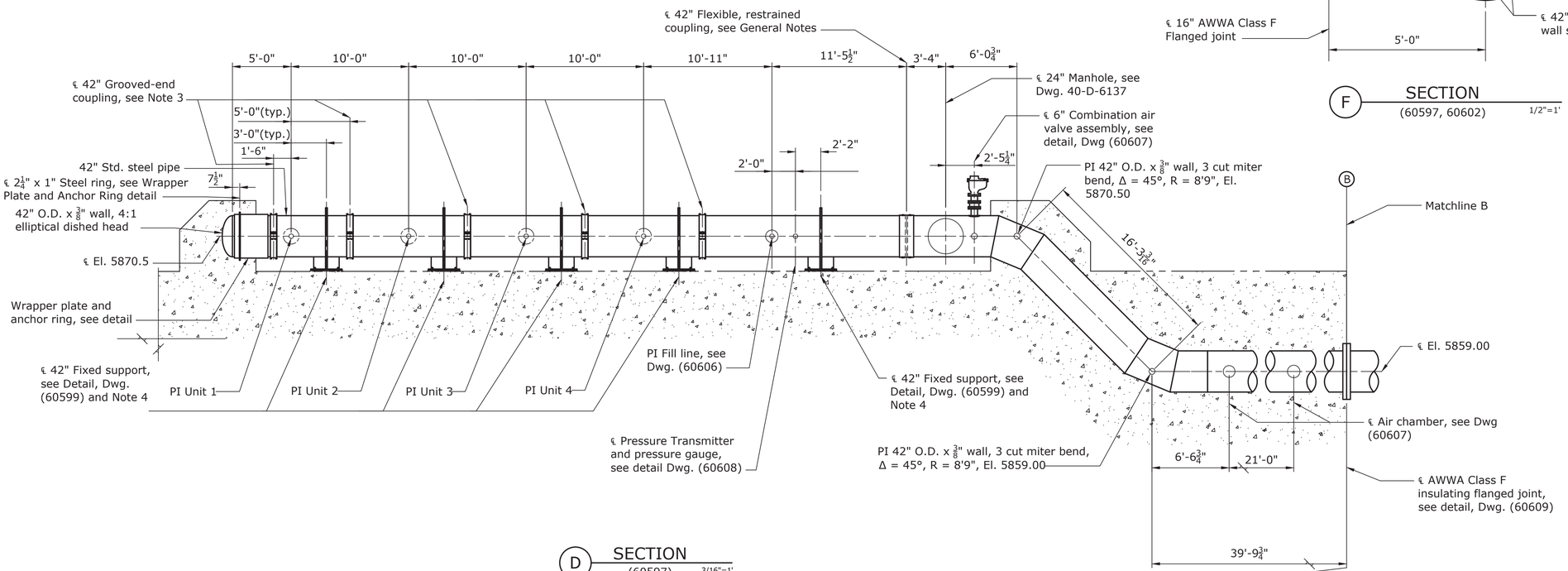

D SECTION (60597) 3/16"=1'

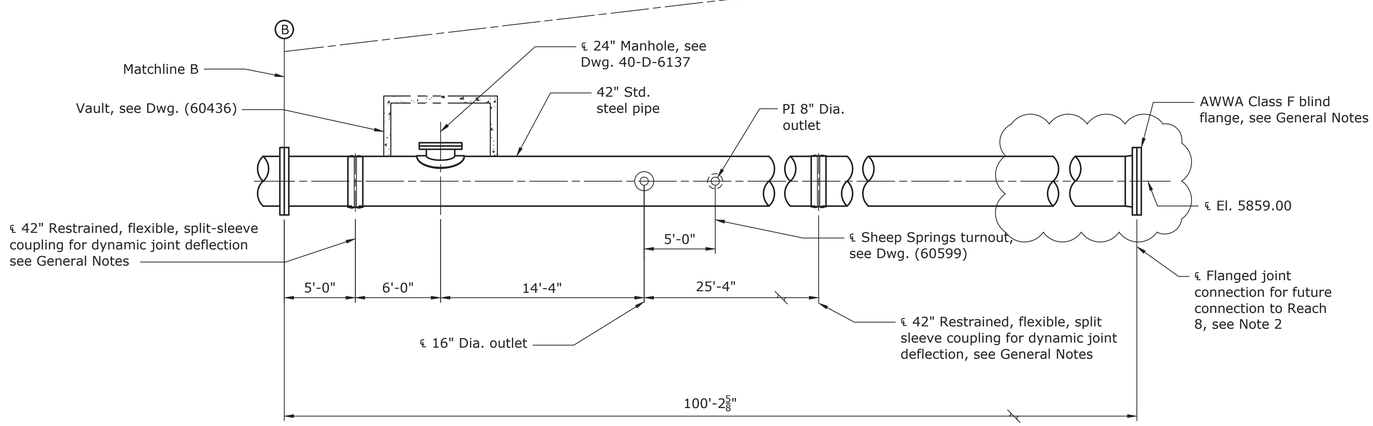

D SECTION (60597) 3/16"=1'

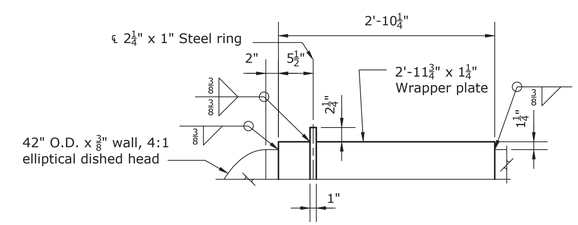

WRAPPER PLATE AND ANCHOR RING (60603)

NOTES

1. For General Notes, see Dwg. (60595)
2. Provide fabricated steel reducer to match yard piping ID to conveyance pipe ID in accordance with AWWA C208.
3. 42" Grooved end coupling gap: 3/8".
4. Contractor to design fixed support, subject to Government approval.

RECLAMATION
Managing Water in the West

ALWAYS THINK SAFETY

U.S. DEPARTMENT OF THE INTERIOR
BUREAU OF RECLAMATION
NAVAJO-GALLUP WATER SUPPLY PROJECT
NEW MEXICO

SAN JUAN LATERAL

PUMPING PLANT NOS. 4 AND 7

REV. NO.		
1	2020-01-21	D GENERAL REVISIONS
	Stephen, Ryan D P.E.	

Kent Schlundt
DESIGNED
Rex Schlosser
DRAWN
Kent Schlundt
CHECKED
Adams, Lucas P.E.
TECH. APPR.
Hummel, Terry L
APPROVED
ADMIN APPROVAL - Mgr Hydr Equip

DENVER, CO 2018-08-23

PUMPING PLANT NO. 4

STEEL MANIFOLD - DISCHARGE PIPE SECTION

1695-D-60598

SHEET 4

DATE AND TIME PLOTTED OCTOBER 16, 2019 14:35
PLOTTED BY MMCCANN

CAD SYSTEM AutoCAD Rel. 23.0s
CAD FILENAME 1695-D-60598-RD-1.DWG

Released

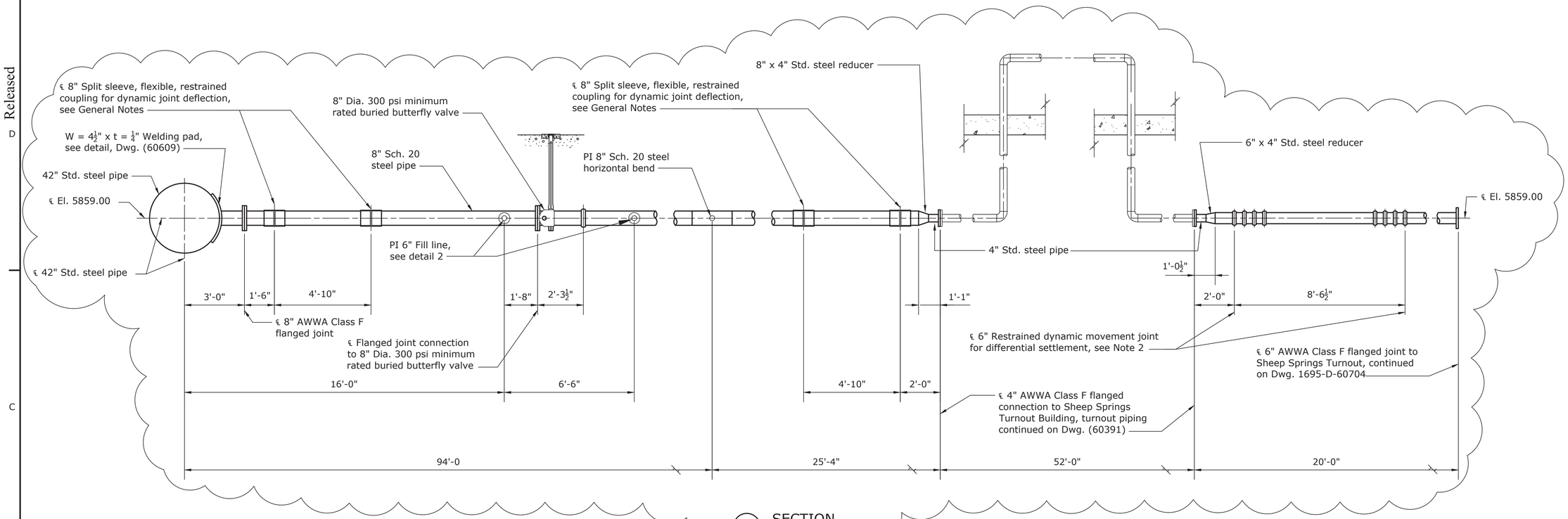

E SECTION (60597) 3/8=1"

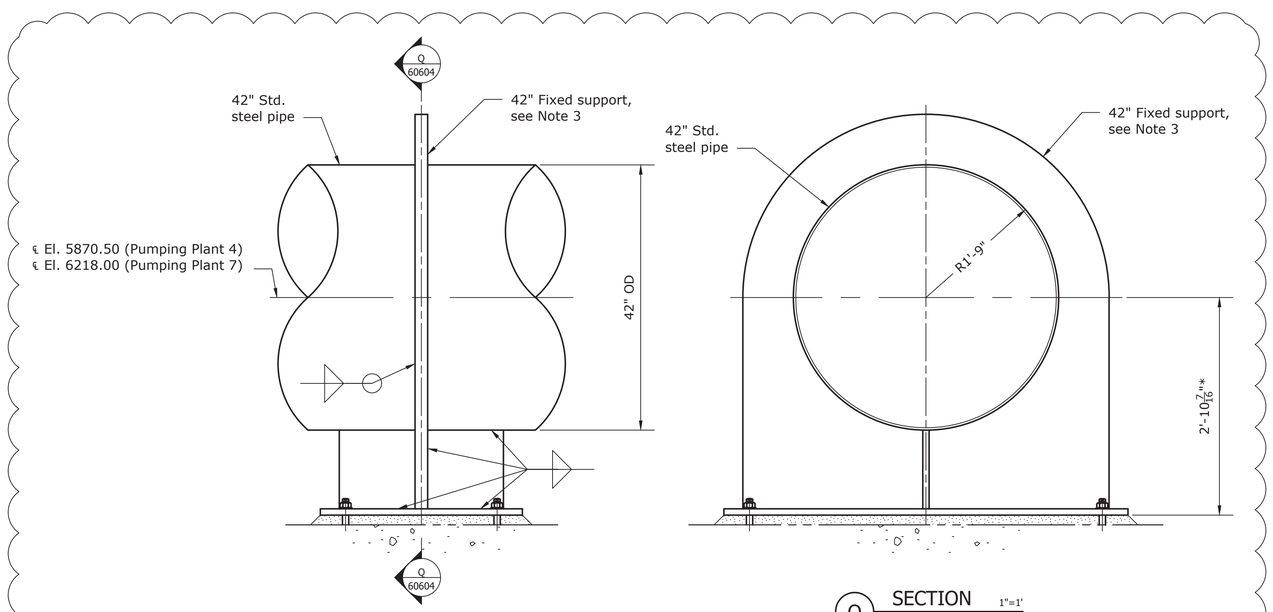

42-INCH FIXED SUPPORT
(60598, 60603)

Q SECTION 1"=1'

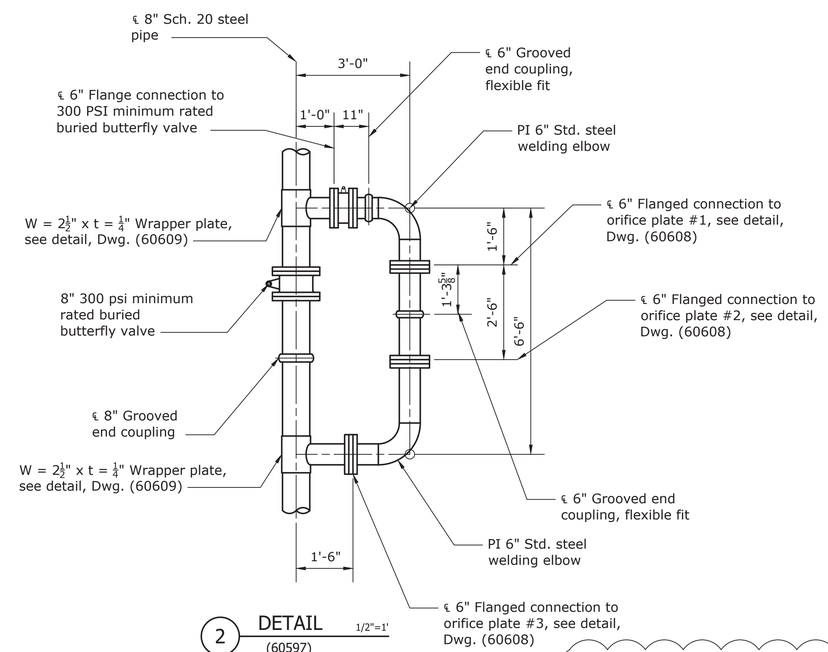

2 DETAIL (60597) 1/2"=1'

NOTES

1. For General Notes, see Dwg. (60595)
2. Coupling manufacturer to determine distance between restrained coupling pairs for dynamic joint movement.
3. Fixed support shown is conceptual only. Contractor to design.

RECLAMATION
Managing Water in the West

ALWAYS THINK SAFETY

U.S. DEPARTMENT OF THE INTERIOR
BUREAU OF RECLAMATION
NAVAJO-GALLUP WATER SUPPLY PROJECT
NEW MEXICO

SAN JUAN LATERAL

PUMPING PLANT NOS. 4 AND 7

REV NO	DATE	DESCRIPTION
1	2020-01-21	0 GENERAL REVISIONS

Stephen, Ryan D P.E.

Kent Schlundt
DESIGNED
Rex Schlosser
DRAWN
Kent Schlundt
CHECKED
Adams, Lucas P.E.
TECH. APPR.
Hummel, Terry L
APPROVED
ADMIN APPROVAL - Mgr Hydr Equip

DENVER, CO 2018-08-23

STEEL MANIFOLD

FILLING LINES - PUMPING PLANT NO. 4 TURNOUT - SECTIONS AND DETAILS

1695-D-60599

SHEET 5

Released

DATE AND TIME PLOTTED Not Plotted
PLOTTED BY Not Plotted
CAD SYSTEM AUTOCAD
CAD FILENAME UNKNOWN

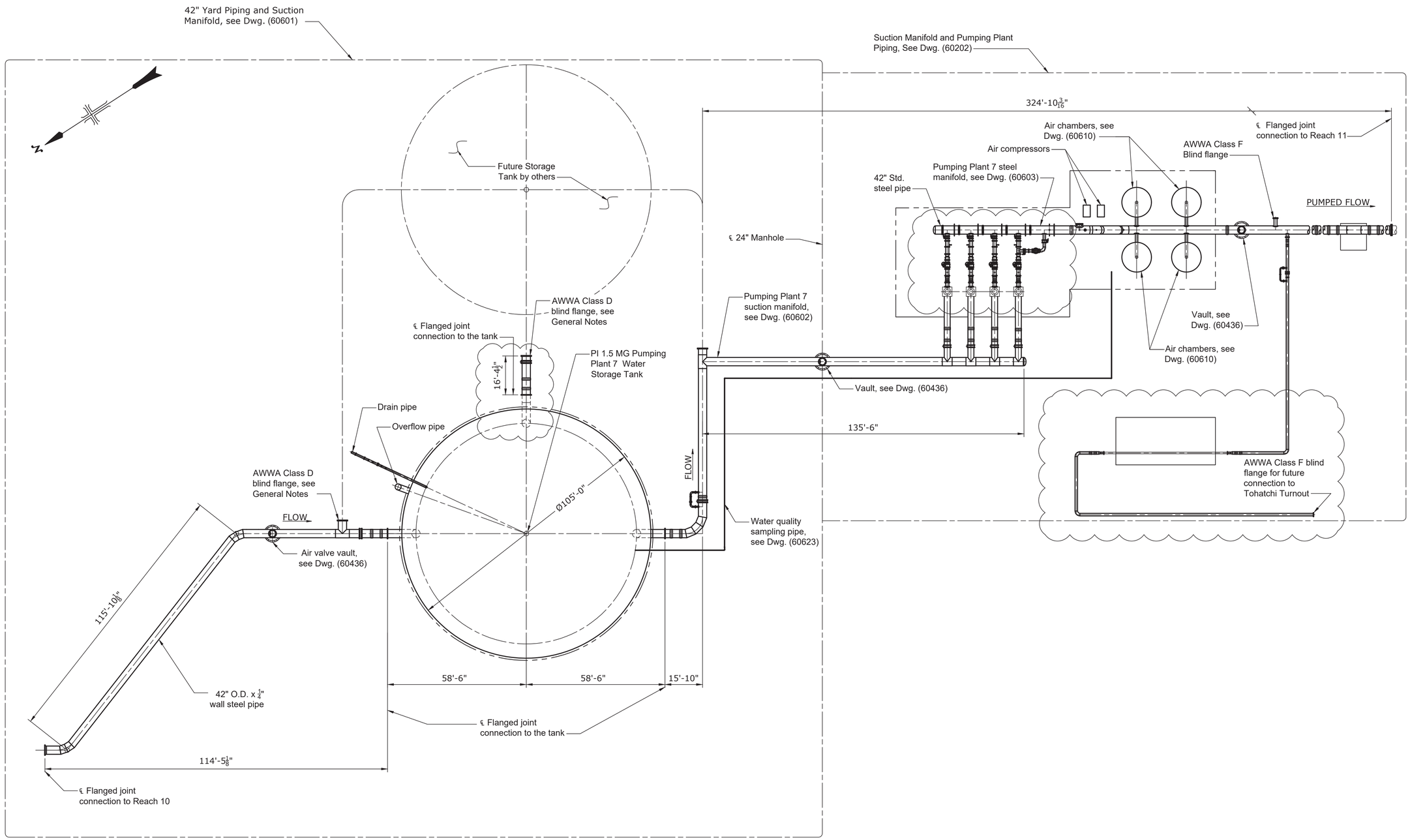

PUMPING PLANT 7 PLAN
(PUMPING PLANT 7 AND STORAGE TANK)

NOTES
1. For General Notes, see Dwg. (60595)

RECLAMATION
Managing Water in the West

ALWAYS THINK SAFETY

U.S. DEPARTMENT OF THE INTERIOR
BUREAU OF RECLAMATION
NAVAJO-GALLUP WATER SUPPLY PROJECT
NEW MEXICO

SAN JUAN LATERAL

PUMPING PLANT NOS. 4 AND 7

REV NO		
2	2020-01-21 Stephen, Ryan D P.E.	D GENERAL REVISIONS
1	2019-10-18 Schlundt, Kent C	D GENERAL REVISIONS

Kent Schlundt
DESIGNED
Rex Schlosser
DRAWN
Kent Schlundt
CHECKED
Adams, Lucas P.E.
TECH. APPR.
Hummel, Terry L
APPROVED
ADMIN APPROVAL - Mgr Hydr Equip

DENVER, CO 2018-08-23

PUMPING PLANT NO. 7

STEEL MANIFOLD AND STORAGE TANK - PLAN

1695-D-60600

SHEET 6

Released

DATE AND TIME PLOTTED JANUARY 8, 2020 15:17
PLOTTED BY RSCHLOSSER

CAD SYSTEM AutoCAD Rel. 22.0s
CAD FILENAME 1695-D-60600-RD-1.DWG

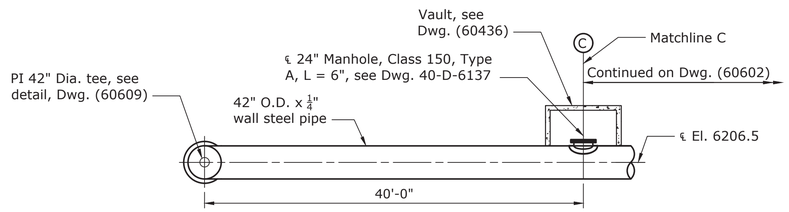

G SECTION 1/8"=1'

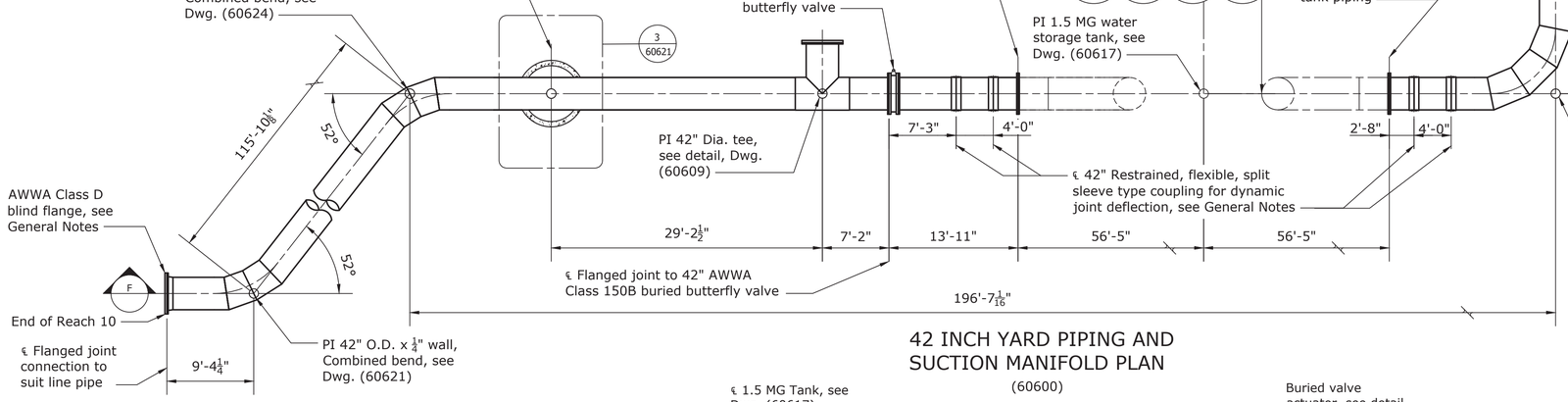

42 INCH YARD PIPING AND SUCTION MANIFOLD PLAN

(60600)

NOTES

1. For General Notes, see Dwg (60695)
2. Provide fabricated steel reducer to match yard piping ID to conveyance pipe ID in accordance with AWWA C208.

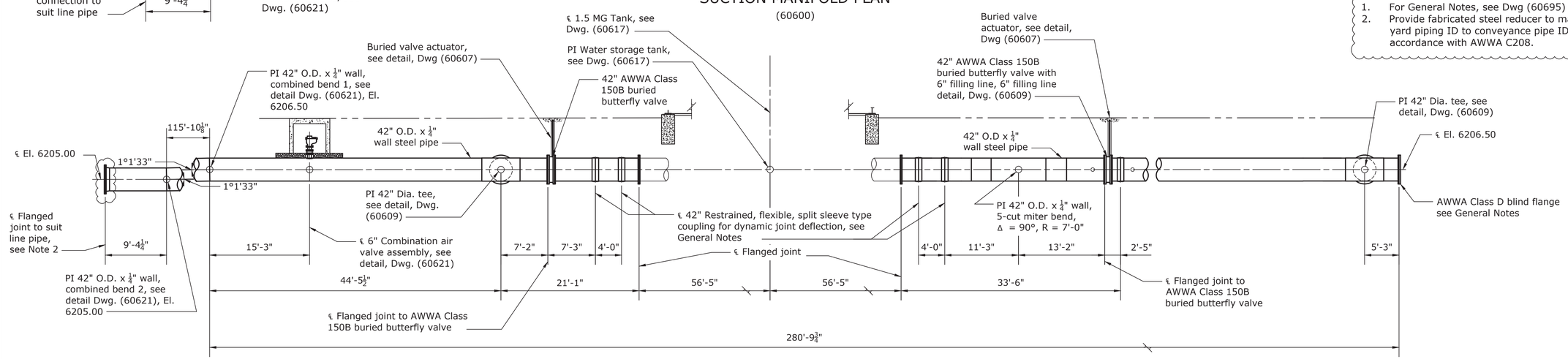

F SECTION 1/8"=1'

RECLAMATION
Managing Water in the West

ALWAYS THINK SAFETY

U.S. DEPARTMENT OF THE INTERIOR
BUREAU OF RECLAMATION
NAVAJO-GALLUP WATER SUPPLY PROJECT
NEW MEXICO

SAN JUAN LATERAL

PUMPING PLANT NOS. 4 AND 7

REV. NO			
2	2020-01-21	Stephen, Ryan D. P.E.	D REVISED DIMENSIONS, GENERAL REVISIONS
1	2019-10-18	Schlundt, Kent C	D REVISED DIMENSIONS, GENERAL REVISIONS

Kent Schlundt
DESIGNED
Rex Schlosser
DRAWN
Kent Schlundt
CHECKED
Adams, Lucas P.E.
TECH. APPR.
Hummel, Terry L
APPROVED
ADMIN APPROVAL - Mgr Hydr Equip

DENVER, CO 2018-08-23

PUMPING PLANT NO. 7

STEEL MANIFOLD - PLAN AND SECTIONS

1695-D-60601

SHEET 7

Released

DATE AND TIME PLOTTED Not Plotted
PLOTTED BY Not Plotted

CAD SYSTEM AUTOCAD
CAD FILENAME UNKNOWN

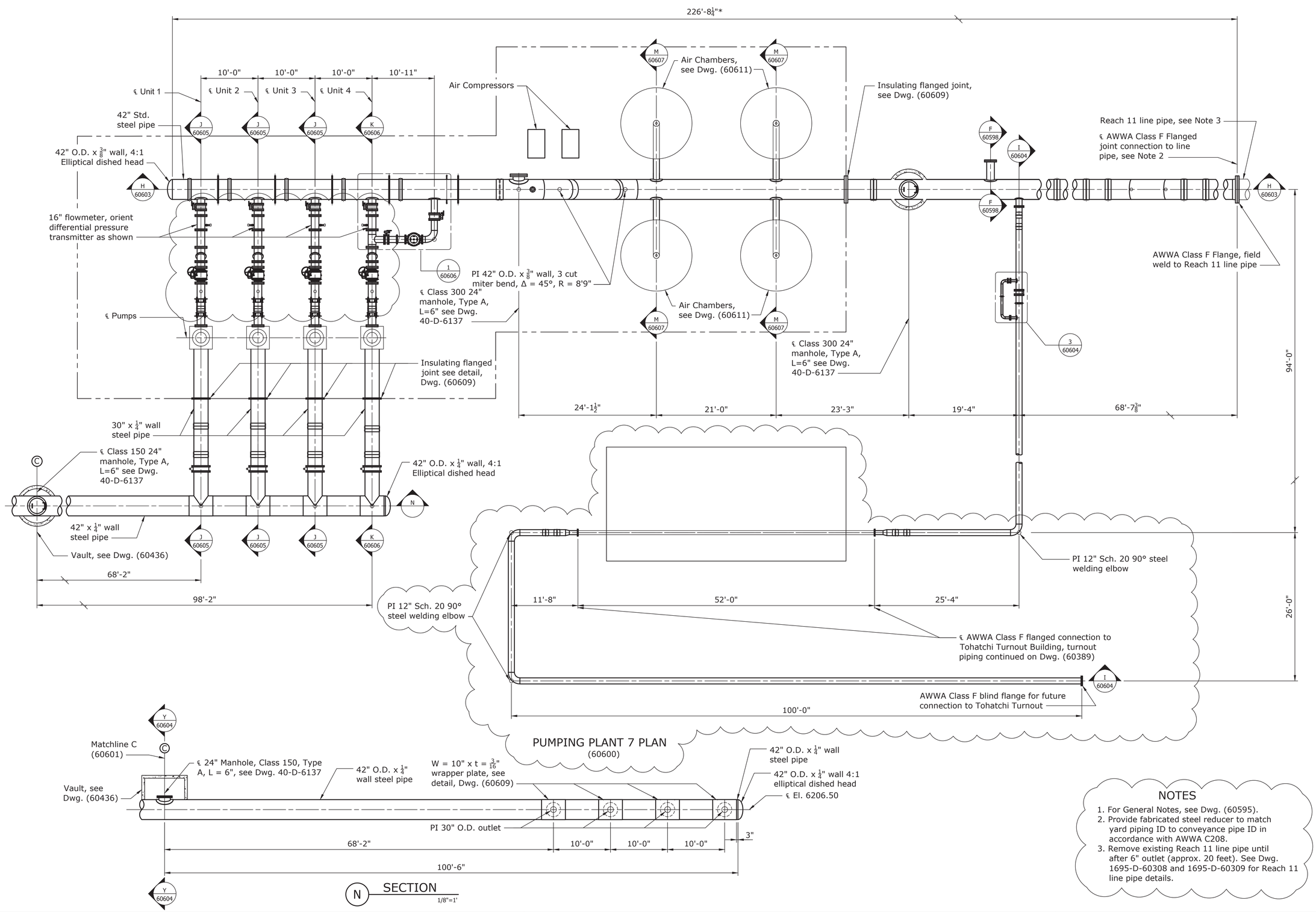

NOTES

1. For General Notes, see Dwg. (60595).
2. Provide fabricated steel reducer to match yard piping ID to conveyance pipe ID in accordance with AWWA C208.
3. Remove existing Reach 11 line pipe until after 6" outlet (approx. 20 feet). See Dwg. 1695-D-60308 and 1695-D-60309 for Reach 11 line pipe details.

RECLAMATION
Managing Water in the West

ALWAYS THINK SAFETY

U.S. DEPARTMENT OF THE INTERIOR
BUREAU OF RECLAMATION
NAVAJO-GALLUP WATER SUPPLY PROJECT
NEW MEXICO

SAN JUAN LATERAL

PUMPING PLANT NOS. 4 AND 7

REV NO		
2	2020-01-21	D GENERAL REVISIONS
1	2018-11-02	D GENERAL REVISIONS

Kent Schlundt
DESIGNED
Rex Schlosser
DRAWN
Kent Schlundt
CHECKED
Adams, Lucas P.E.
TECH. APPR.
Hummel, Terry L
APPROVED
ADMIN APPROVAL - Mgr Hydr Equip

DENVER, CO 2018-08-23

PUMPING PLANT NO. 7

STEEL MANIFOLD - PLAN AND SECTION

1695-D-60602

SHEET 8

Released

DATE AND TIME PLOTTED JANUARY 8, 2020 15:18
PLOTTED BY RSCHLOSSER

CAD SYSTEM AutoCAD Rel. 22.0s
CAD FILENAME 1695-D-60602-AD-1.DWG

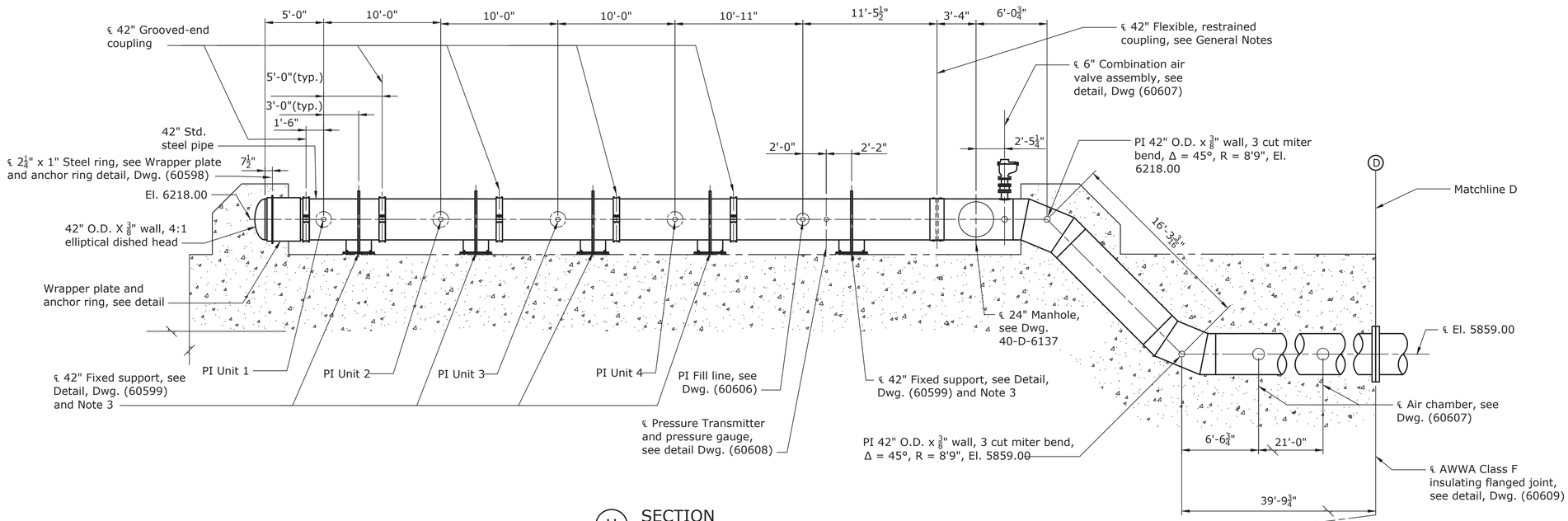

H SECTION (60602) 3/16"=1'

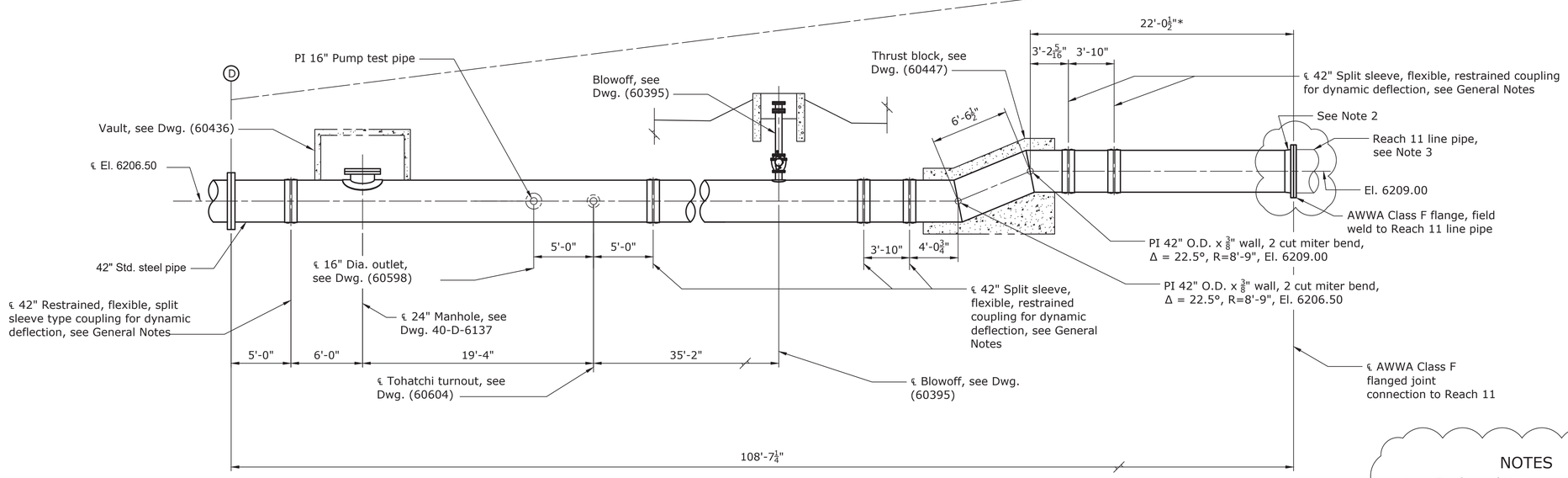

H SECTION (60602) 3/16"=1'

NOTES

1. For General Notes, see Dwg. (60595)
2. Provide fabricated steel reducer to match yard piping ID to conveyance pipe ID in accordance with AWWA C208.
3. Remove existing Reach 11 line pipe until after 6" outlet (approx. 20 feet). See Dwg. 1695-D-60308 and 1695-D-60309 for Reach 11 line pipe details.

RECLAMATION
Managing Water in the West

ALWAYS THINK SAFETY

U.S. DEPARTMENT OF THE INTERIOR
BUREAU OF RECLAMATION
NAVAJO-GALLUP WATER SUPPLY PROJECT
NEW MEXICO

SAN JUAN LATERAL

PUMPING PLANT NOS. 4 AND 7

REV. NO.	DATE		
1	2020-07-21	Stephen, Ryan D P.E.	D GENERAL REVISIONS

Kent Schlundt
DESIGNED
Rex Schlosser
DRAWN
Kent Schlundt
CHECKED
Adams, Lucas P.E.
TECH. APPR.
Hummel, Terry L
APPROVED
ADMIN APPROVAL - Mgr Hydr Equip

DENVER, CO 2018-08-23

PUMPING PLANT NO. 7

STEEL MANIFOLD - DISCHARGE PIPE SECTION

1695-D-60603

SHEET 9

Released

DATE AND TIME PLOTTED JANUARY 8, 2020 15:19
PLOTTED BY RSCHLOSSER

CAD SYSTEM AutoCAD Rel. 22.0s
CAD FILENAME 1695-D-60603-AD-1.DWG

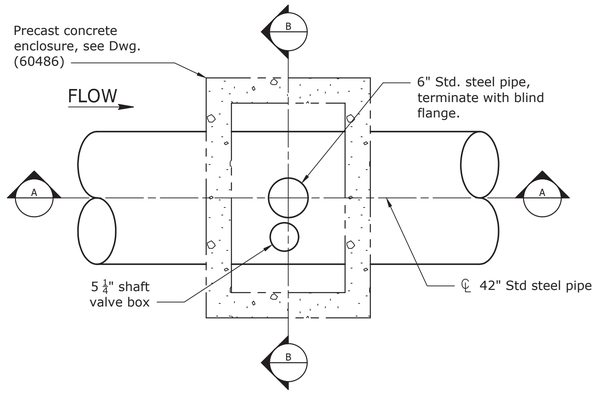

PLAN

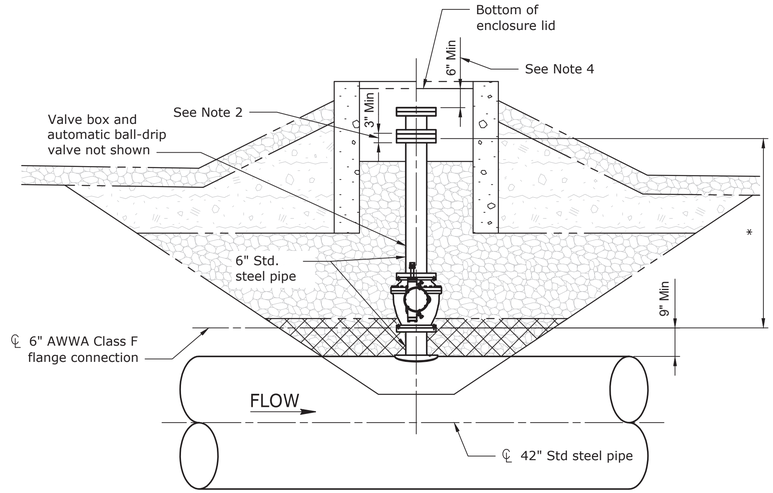

A SECTION 1/2=1"

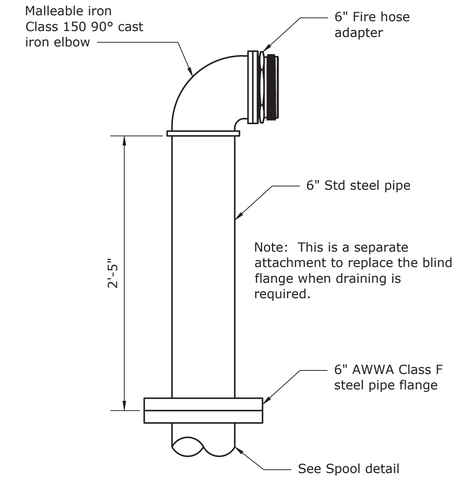

FIRE HOSE CONNECTION

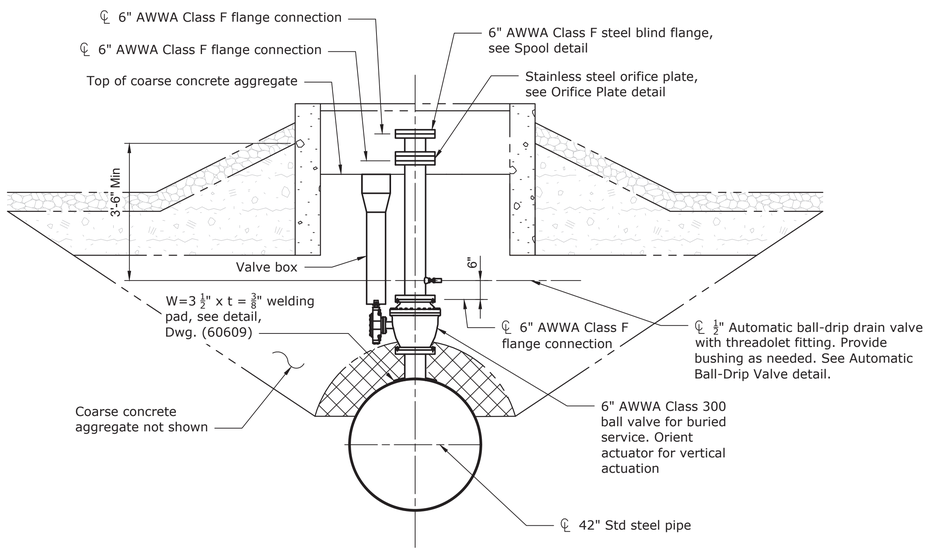

B SECTION 1/2=1"

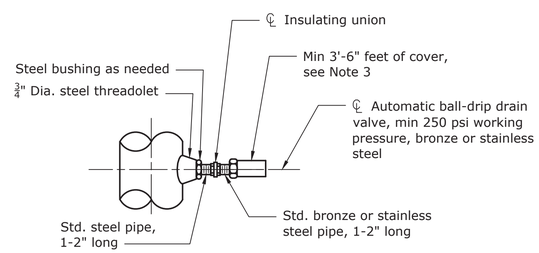

AUTOMATIC BALL-DRIP VALVE

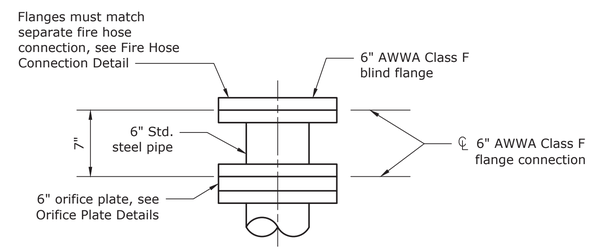

SPOOL

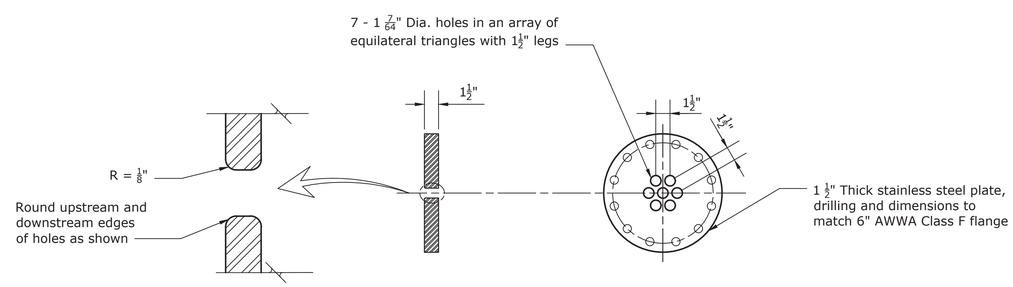

ORIFICE HOLE

ORIFICE PLATE

NOTES

1. For General Notes, see Dwg. (60595).
2. Minimum 3" of clearance between bottom of flange and coarse concrete aggregate.
3. Minimum 3'-6" of ground cover from ground surface to centerline of automatic ball-drip drain valve.
4. Minimum of 6" of clearance between the top of the blind flange and the bottom of the enclosure lid.
5. One fire hose connection piece is required. Store in location as directed by the COR.
6. Weld threadolets to pipe as recommended by threadolet manufacturer.

RECLAMATION
Managing Water in the West

ALWAYS THINK SAFETY

U.S. DEPARTMENT OF THE INTERIOR
BUREAU OF RECLAMATION
NAVAJO-GALLUP WATER SUPPLY PROJECT
NEW MEXICO

SAN JUAN LATERAL
PUMPING PLANT NOS. 4 AND 7

Kent Schlundt
DESIGNED
Kent Schlundt
DRAWN
Rex Schlosser
CHECKED
Schlundt, Kent C P.E.
TECH. APPR.
Stephen, Ryan D P.E.
APPROVED
ADMIN APPROVAL - Hydraulic Equipment Group Manager

DENVER, CO 2020-01-21

STEEL MANIFOLD - PUMPING PLANT NO. 7 BLOWOFF

PLAN - SECTIONS AND DETAILS

1695-D-60395

SHEET 1

Released

DATE AND TIME PLOTTED Not Plotted
PLOTTED BY Not Plotted

CAD SYSTEM AUTOCAD
CAD FILENAME UNKNOWN

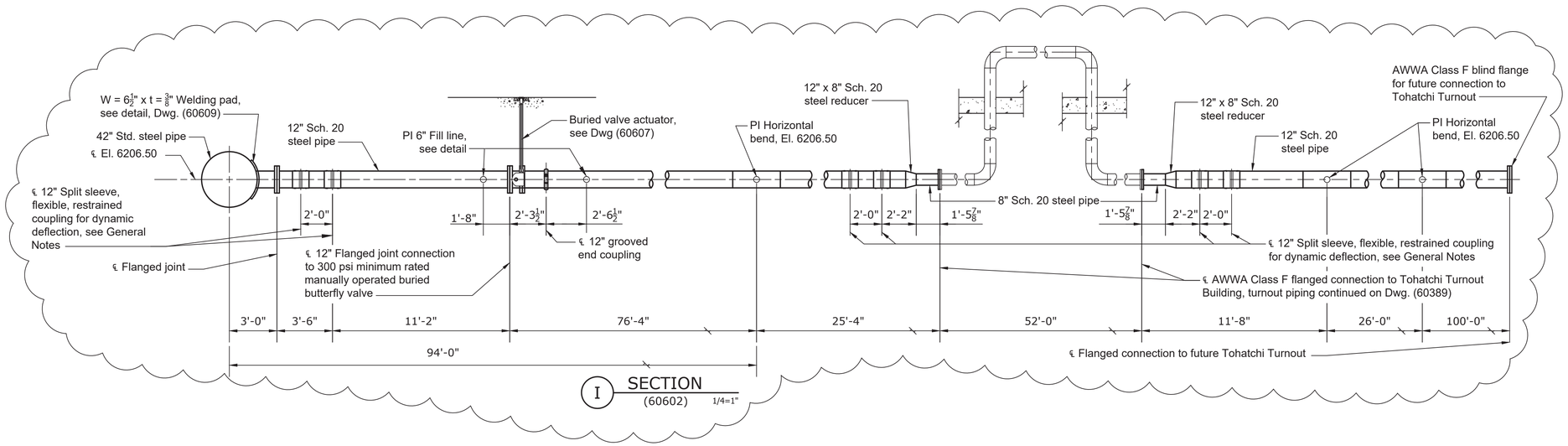

I SECTION (60602) 1/4=1"

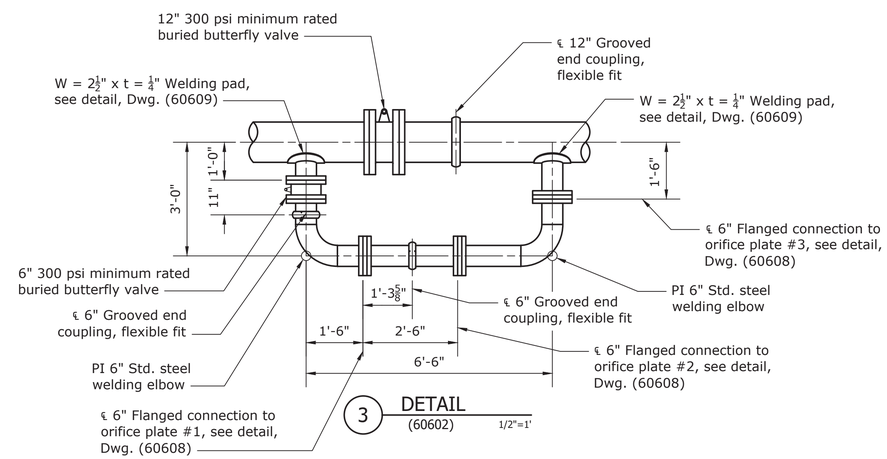

3 DETAIL (60602) 1/2"=1'

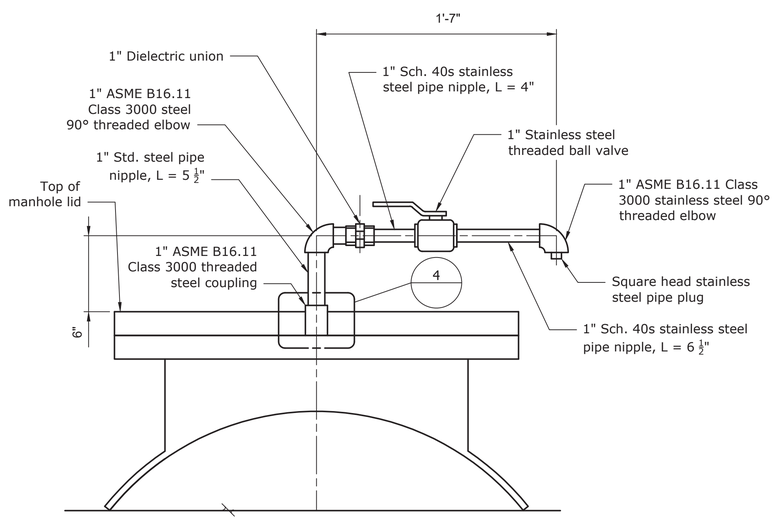

Y SECTION (60597, 60602) 2"=1'

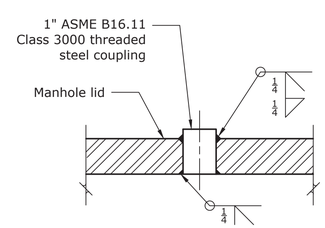

4 DETAIL 3"=1'

NOTES

1. For General Notes, see Dwg. (60595)

RECLAMATION
Managing Water in the West

ALWAYS THINK SAFETY

U.S. DEPARTMENT OF THE INTERIOR
BUREAU OF RECLAMATION
NAVAJO-GALLUP WATER SUPPLY PROJECT
NEW MEXICO

SAN JUAN LATERAL

PUMPING PLANT NOS. 4 AND 7

REV NO	DATE	GENERAL REVISIONS
1	2020-01-27	D Stephen, Ryan D. P.E.

Kent Schlundt
DESIGNED
Rex Schlundt
DRAWN
Kent Schlundt
CHECKED
Adams, Lucas P.E.
TECH. APPR.
Hummel, Terry L
APPROVED
ADMIN APPROVAL - Mgr Hydr Equip

DENVER, CO 2018-08-31

STEEL MANIFOLD

PUMPING PLANT NO. 7 TURNOUT AND FILLING LINE - SECTION AND DETAIL

1695-D-60604

SHEET 10

Released

DATE AND TIME PLOTTED Not Plotted
PLOTTED BY Not Plotted
CAD SYSTEM AUTOCAD
CAD FILENAME UNKNOWN

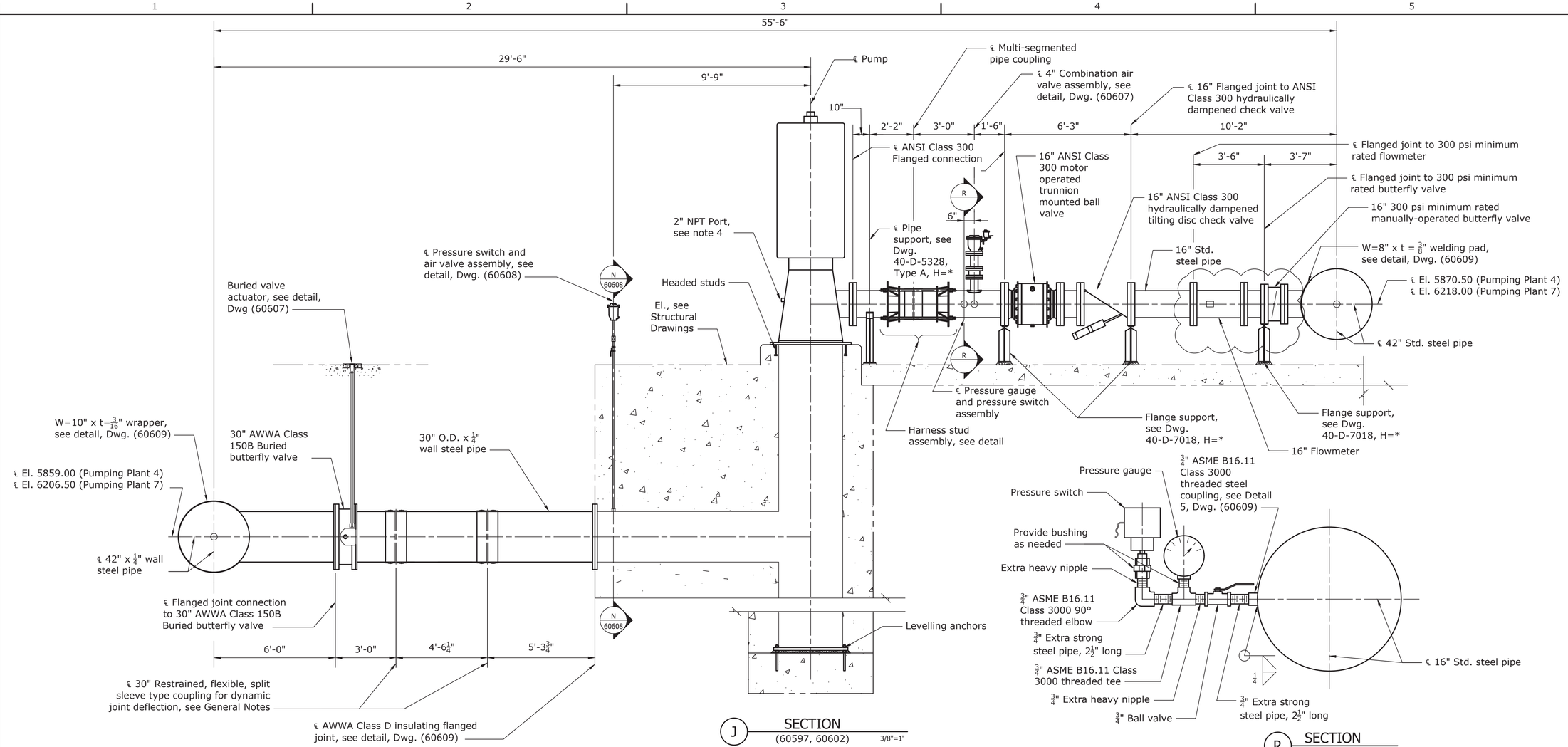

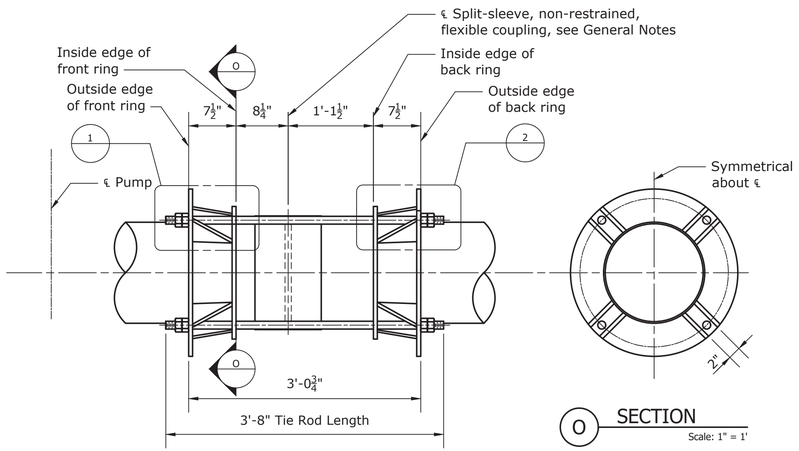

HARNESS STUD ASSEMBLY

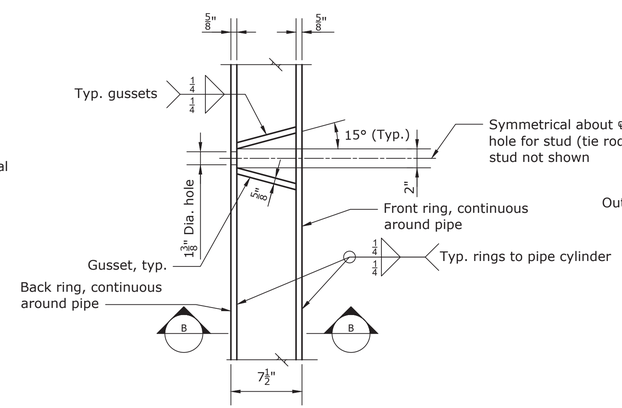

(DETAIL 2 SIMILAR, OPPOSITE HAND)

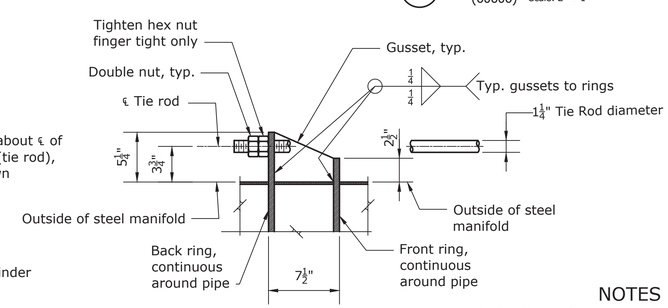

NOTES

1. For General Notes, see Dwg (60595)
2. Orient joint harness so tie rods straddle the vertical centerline of the pipe, i.e. 45° off the vertical pipe centerline.
3. Install the split sleeve coupling so the coupling bolts are vertical, accessible and do not interfere with the harness tie rods.
4. Contractor to design combination air valve assembly for pump, subject to government approval.

RECLAMATION
Managing Water in the West

ALWAYS THINK SAFETY

U.S. DEPARTMENT OF THE INTERIOR
BUREAU OF RECLAMATION
NAVAJO-GALLUP WATER SUPPLY PROJECT
NEW MEXICO

SAN JUAN LATERAL
PUMPING PLANT NOS. 4 AND 7

REV. NO.			
2	D	2020-01-21	GENERAL REVISIONS
		Stephen, Ryan D P.E.	
1	D	2019-10-18	ADDED PRESSURE GAUGE AND PRESSURE SWITCH DETAIL
		Schlundt, Kent C	

Kent Schlundt
DESIGNED
Rex Schlosser
DRAWN
Kent Schlundt
CHECKED
Adams, Lucas P.E.
TECH. APPR.
Hummel, Terry L
APPROVED
ADMIN APPROVAL - Mgr Hydr Equip

DENVER, CO 2018-08-23

STEEL MANIFOLD

PUMP INLET AND DISCHARGE PIPE - SECTION

1695-D-60605

SHEET 11

Released

DATE AND TIME PLOTTED Not Plotted
PLOTTED BY Not Plotted

CAD SYSTEM AUTOCAD
CAD FILENAME UNKNOWN

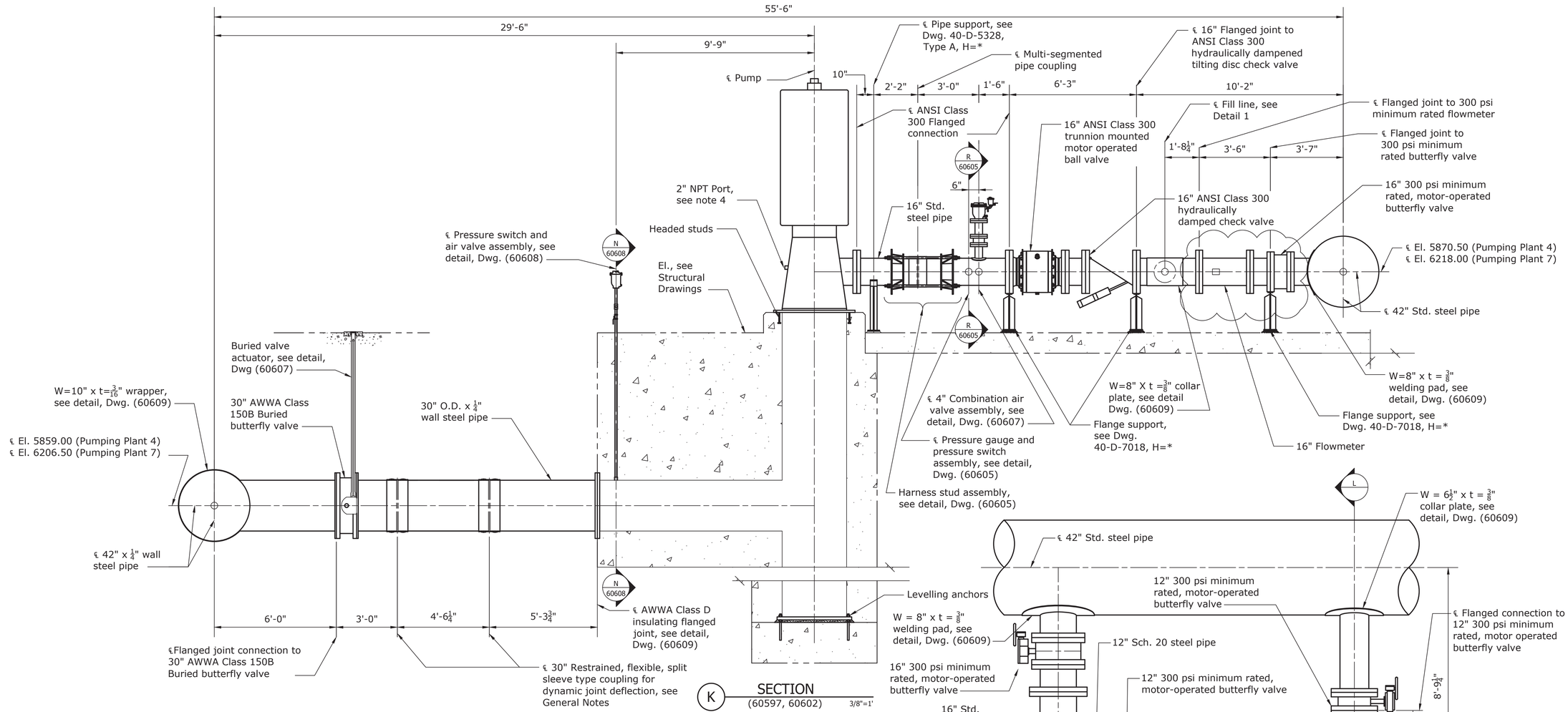

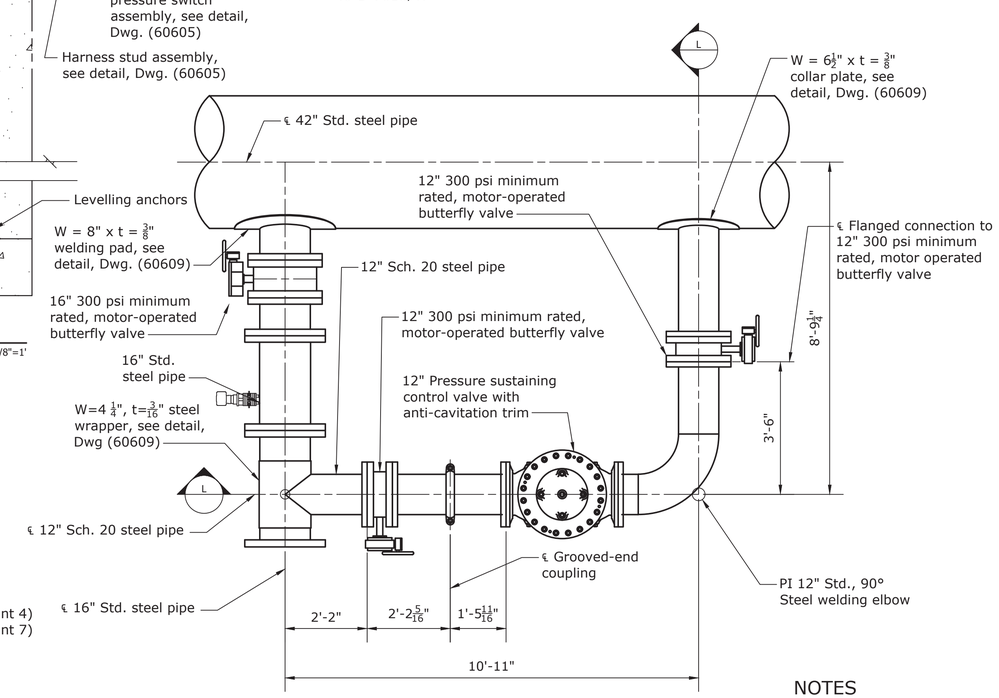

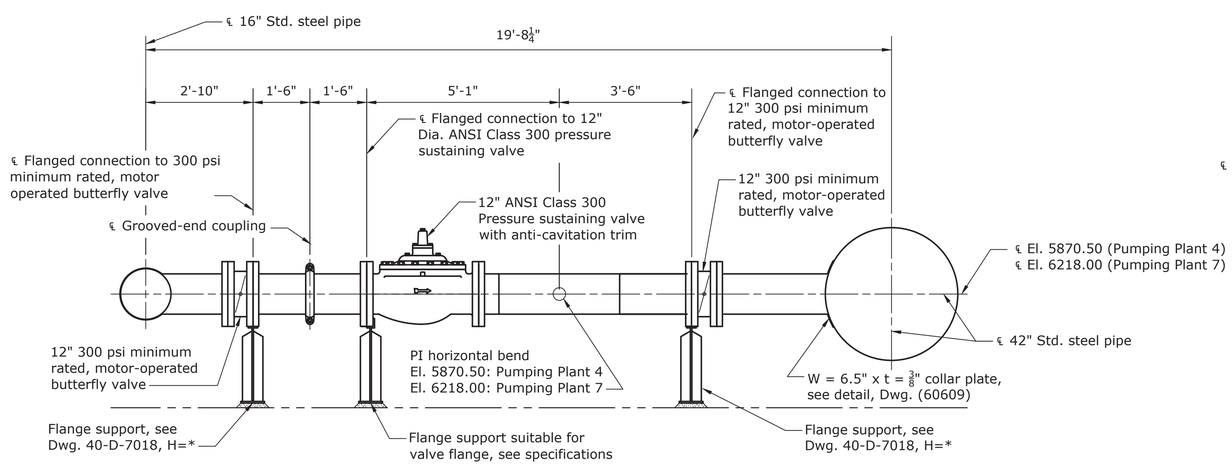

NOTES

1. For General Notes, see Dwg (60595.)
2. Orient joint harness so tie rods straddle the vertical centerline of the pipe, i.e. 45° off the vertical pipe centerline.
3. Install the split sleeve coupling so the coupling bolts are vertical, accessible and do not interfere with the harness tie rods.
4. Contractor to design combination air valve assembly for pump, subject to government approval.

RECLAMATION
Managing Water in the West

ALWAYS THINK SAFETY

U.S. DEPARTMENT OF THE INTERIOR
BUREAU OF RECLAMATION
NAVAJO-GALLUP WATER SUPPLY PROJECT
NEW MEXICO

SAN JUAN LATERAL
PUMPING PLANT NOS. 4 AND 7

REV NO		
2	2020-01-21 Stephen, Ryan D P.E.	D GENERAL REVISIONS
1	2018-11-02 Schlundt, Kent C	D ADDED PRESSURE GAUGE AND PRESSURE SWITCH TO PUMP DISCHARGE MANIFOLD

Kent Schlundt
DESIGNED
Rex Schlosser
DRAWN
Kent Schlundt
CHECKED
Adams, Lucas P.E.
TECH. APPR.
Hummel, Terry L
APPROVED
ADMIN APPROVAL - Mgr Hydr Equip

DENVER, CO 2018-08-31

STEEL MANIFOLD

PUMP DISCHARGE PIPE WITH FILLING LINE - SECTION AND DETAILS

1695-D-60606

SHEET 12

Released

DATE AND TIME PLOTTED Not Plotted
PLOTTED BY Not Plotted
CAD SYSTEM AUTOCAD
CAD FILENAME UNKNOWN

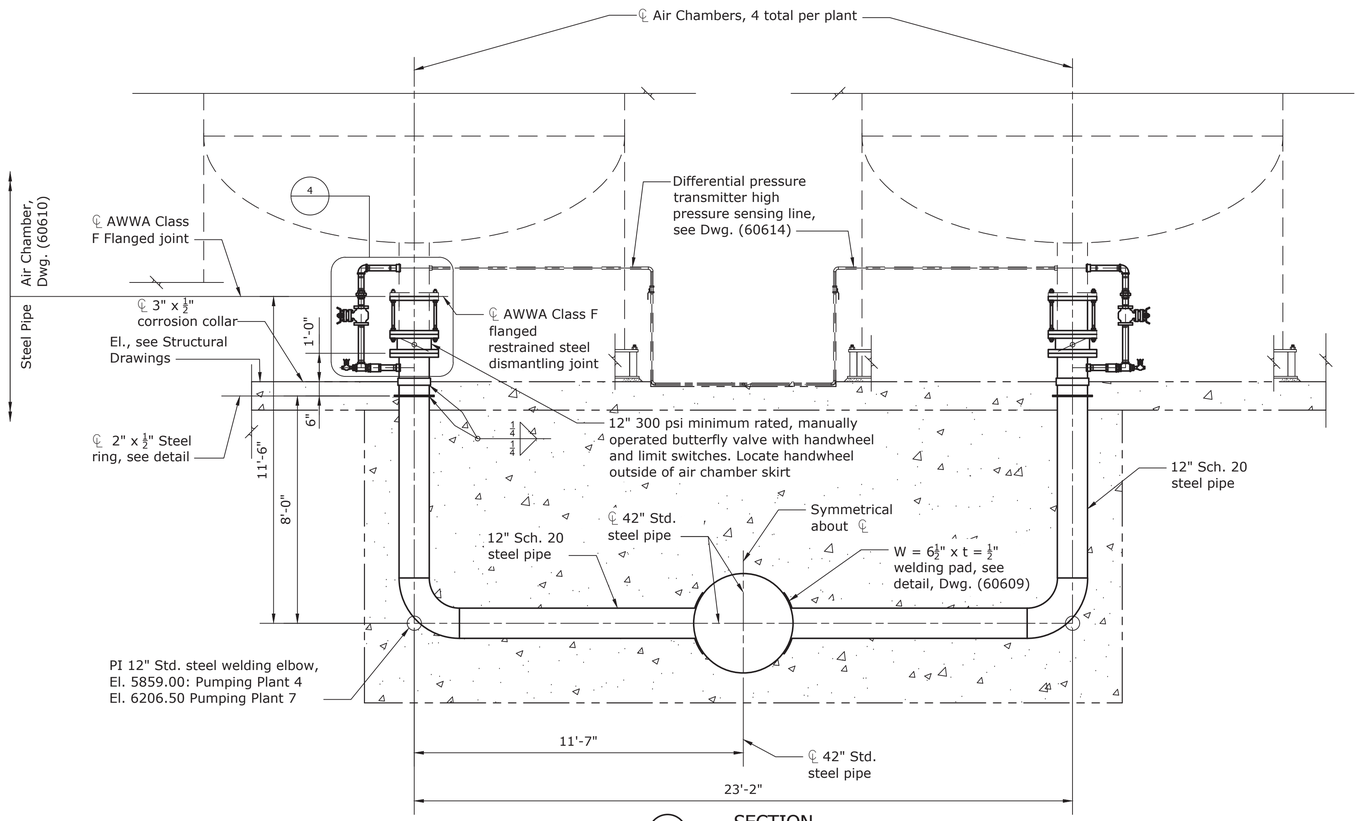

M SECTION (60597, 60602) 3/8"=1'

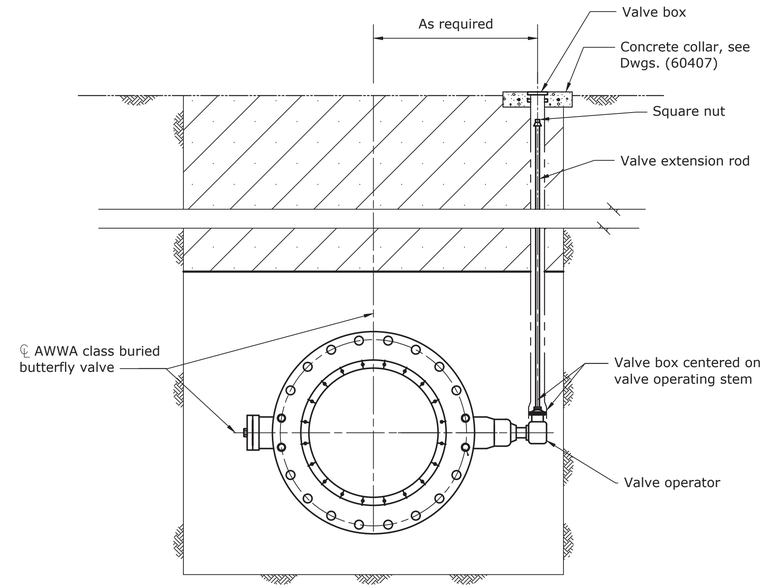

BURIED VALVE ACTUATOR
(BUTTERFLY VALVE SHOWN)
(60596, 60599, 60601, 60604, 60605, 60606, 60609, 60622, 60623)

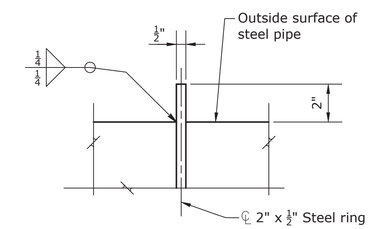

STEEL RING

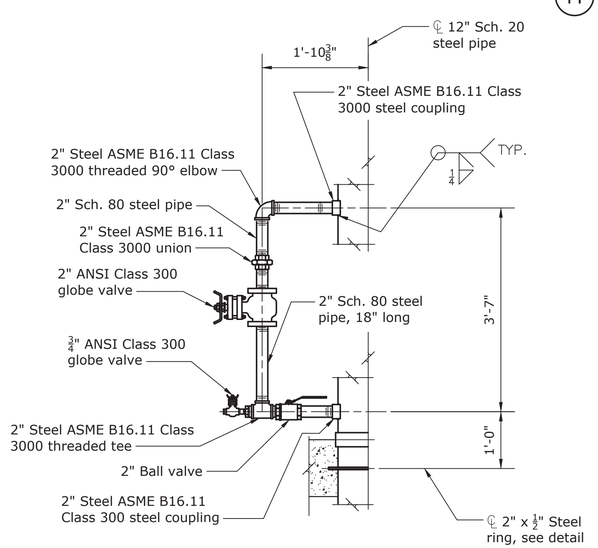

4 DETAIL 3/4"=1'

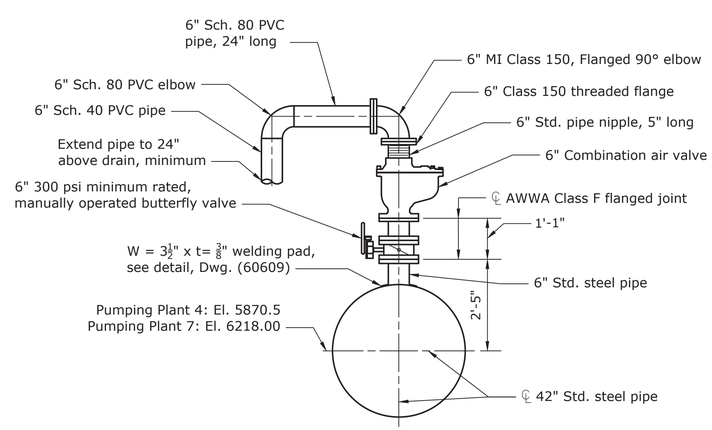

6" COMBINATION AIR VALVE
(60598, 60603)

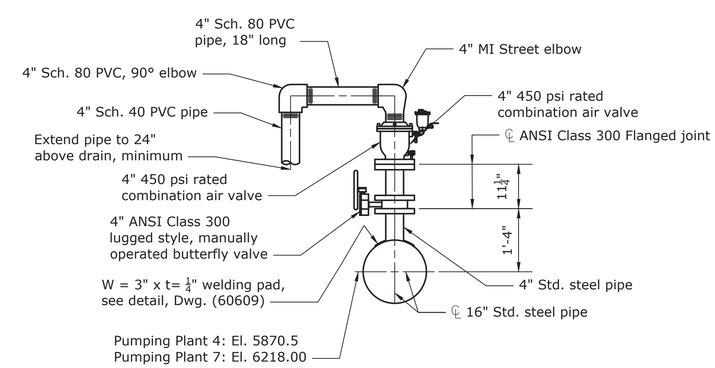

4" COMBINATION AIR VALVE
(60605, 60606)

NOTES

1. For General Notes, see Dwg. (60595).

RECLAMATION
Managing Water in the West

ALWAYS THINK SAFETY

U.S. DEPARTMENT OF THE INTERIOR
BUREAU OF RECLAMATION
NAVAJO-GALLUP WATER SUPPLY PROJECT
NEW MEXICO

SAN JUAN LATERAL

PUMPING PLANT NOS. 4 AND 7

REV. NO	DATE	BY	REVISIONS
1	2018-11-02	Schlundt, Kent C	GENERAL REVISIONS

Kent Schlundt
DESIGNED
Rex Schlosser
DRAWN
Kent Schlundt
CHECKED
Adams, Lucas P.E.
TECH. APPR.
Hummel, Terry L
APPROVED
ADMIN APPROVAL - Mgr Hydr Equip
DENVER, CO 2018-08-23

STEEL MANIFOLD

SECTION AND DETAILS

1695-D-60607

SHEET 13

Released

DATE AND TIME PLOTTED Not Plotted
PLOTTED BY Not Plotted

CAD SYSTEM AUTOCAD
CAD FILENAME UNKNOWN

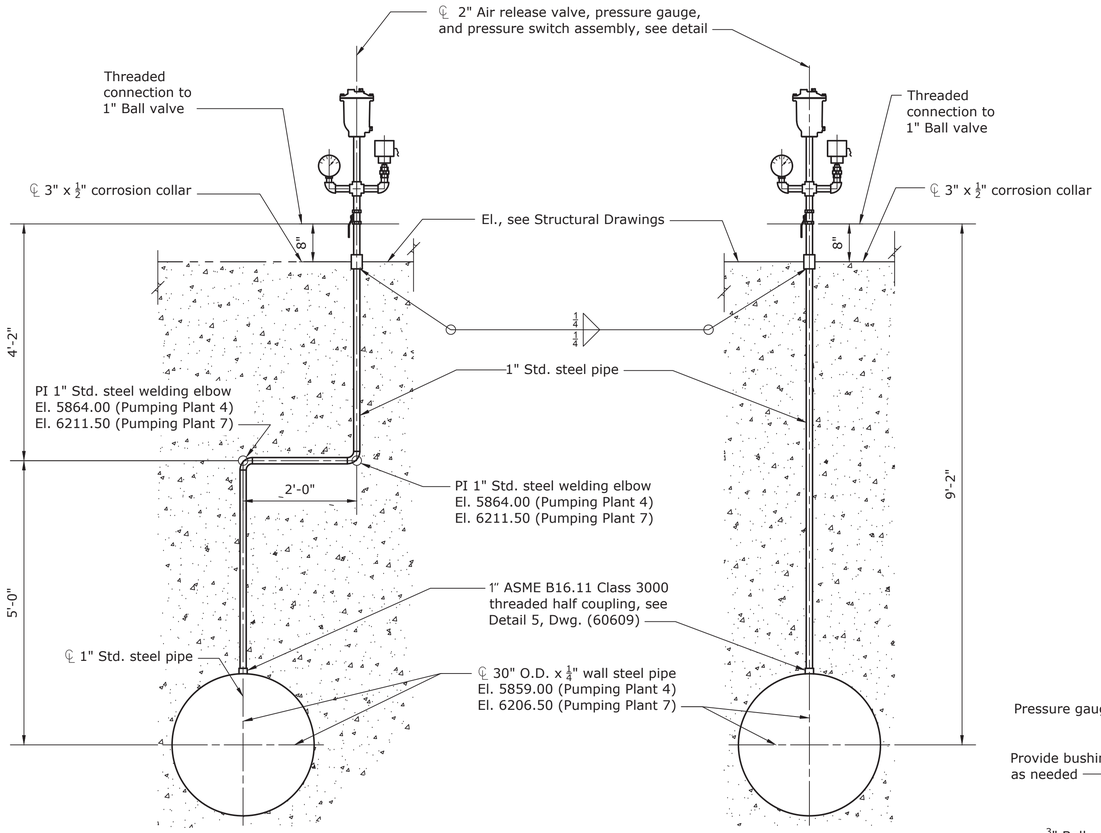

N SECTION (60605, 60606) 3/4"=1'

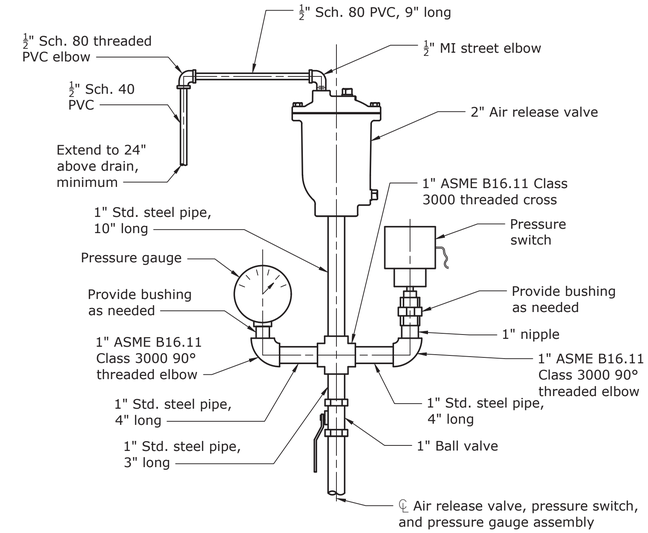

AIR RELEASE VALVE, PRESSURE SWITCH, AND PRESSURE GAUGE ASSEMBLY

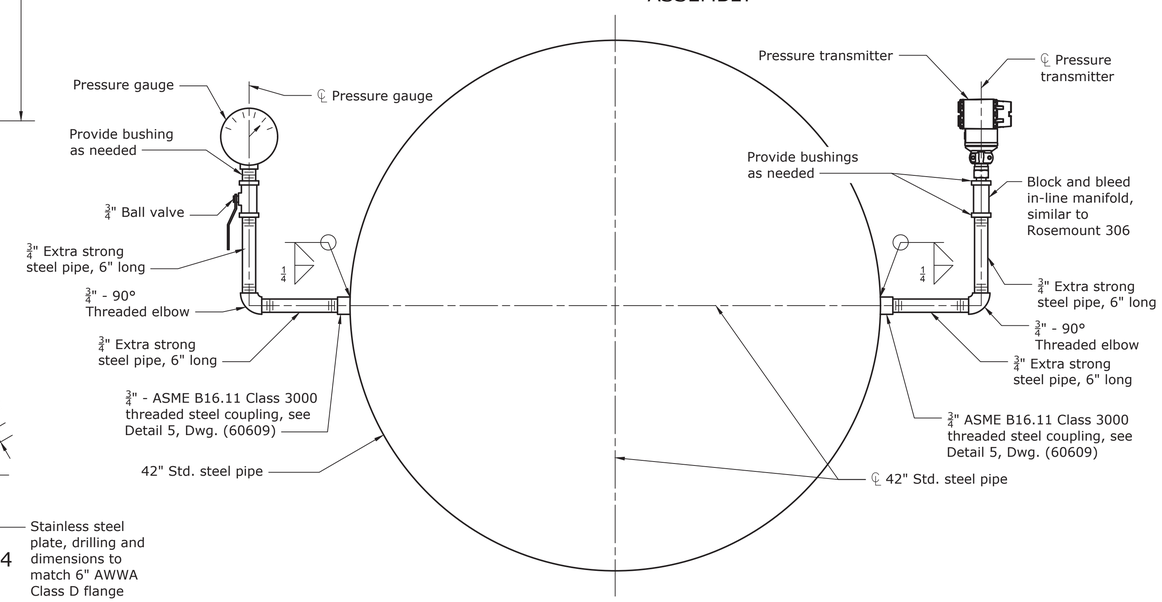

PRESSURE GAUGE AND TRANSMITTER (60598, 60603)

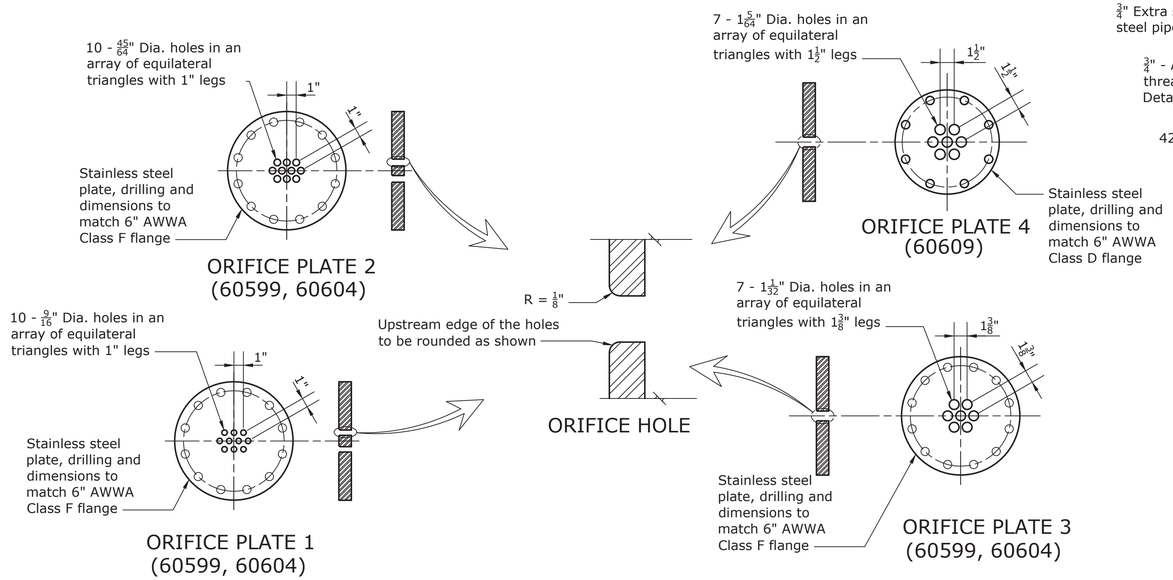

NOTES

1. For General Notes, see Dwg. (60595).

RECLAMATION
Managing Water in the West

ALWAYS THINK SAFETY

U.S. DEPARTMENT OF THE INTERIOR
BUREAU OF RECLAMATION
NAVAJO-GALLUP WATER SUPPLY PROJECT
NEW MEXICO

SAN JUAN LATERAL
PUMPING PLANT NOS. 4 AND 7

Kent Schlundt
DESIGNED
Rex Schlosser
DRAWN
Kent Schlundt
CHECKED
Adams, Lucas P.E.
TECH. APPR.
Hummel, Terry L
APPROVED
ADMIN APPROVAL - Mgr Hydr Equip

DENVER, CO 2018-08-23

STEEL MANIFOLD

SECTION AND DETAILS

1695-D-60608

SHEET 14

Released

DATE AND TIME PLOTTED Not Plotted
PLOTTED BY Not Plotted

CAD SYSTEM AUTOCAD
CAD FILENAME UNKNOWN

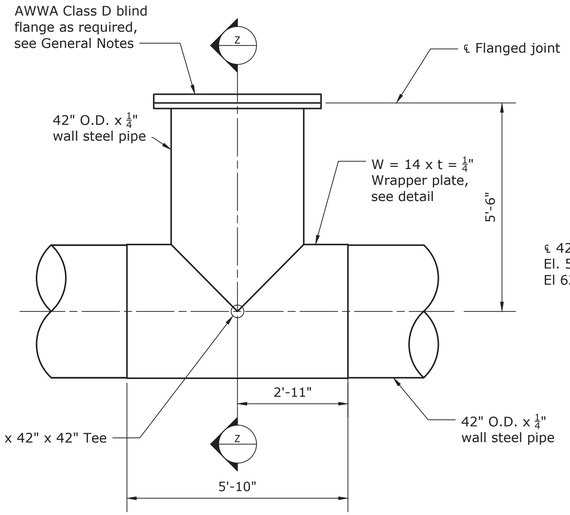

42" DIA. TEE
(60596, 60601)

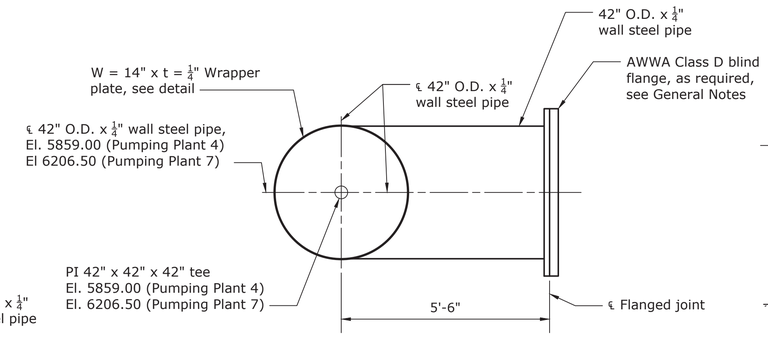

Z SECTION
1/2"=1'

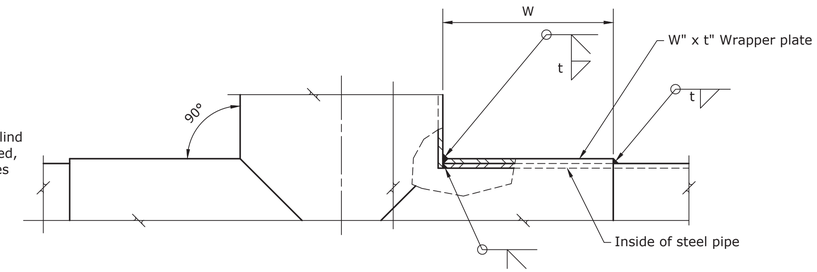

WRAPPER PLATE
(60597, 60599, 60602, 60604, 60605, 60606)

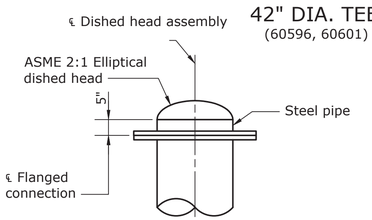

ASME ELLIPTICAL DISHED HEAD ASSEMBLY
(60595)

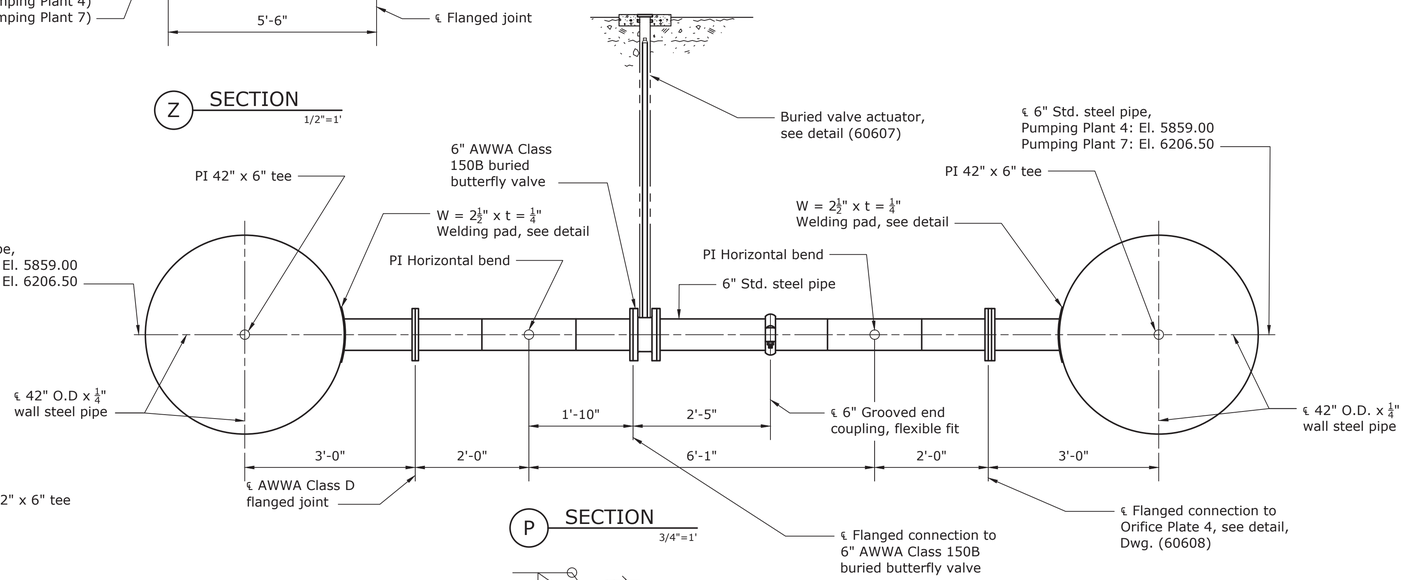

P SECTION
3/4"=1'

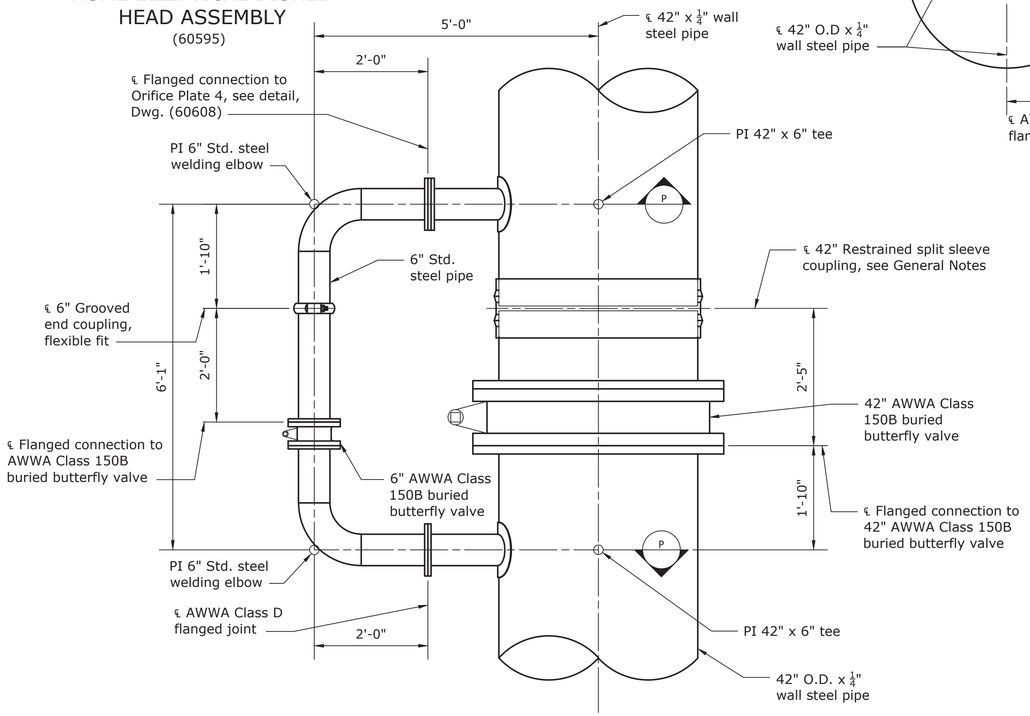

6" FILLING LINE
(60596, 60601)

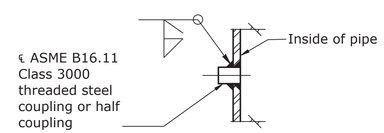

5 DETAIL
(60597, 60598, 60603, 60605, 60608, 60621)
1"=1'

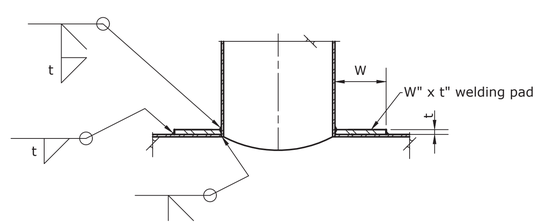

WELDING PAD
(60395, 60598, 60599, 60604, 60605, 60606, 60607)

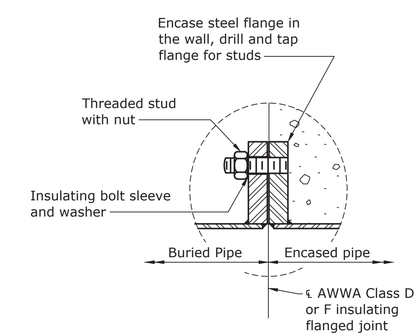

INSULATING FLANGED JOINT
(60597, 60598, 60603, 60605, 60606)

NOTES
1. For General Notes, see Dwg. (60595).

RECLAMATION
Managing Water in the West

ALWAYS THINK SAFETY

U.S. DEPARTMENT OF THE INTERIOR
BUREAU OF RECLAMATION
NAVAJO-GALLUP WATER SUPPLY PROJECT
NEW MEXICO

SAN JUAN LATERAL
PUMPING PLANT NOS. 4 AND 7

REV NO	DATE	BY	REVISIONS
2	2020-01-21	Stephen, Ryan D P.E.	GENERAL REVISIONS
1	2018-11-02	Schlundt, Kent C	ADDED ASME ELLIPTICAL DISHED HEAD DETAIL

Kent Schlundt
DESIGNED
Rex Schlosser
DRAWN
Kent Schlundt
CHECKED
Adams, Lucas P.E.
TECH. APPR.
Hummel, Terry L
APPROVED
ADMIN APPROVAL - Mgr Hydr Equip

DENVER, CO 2018-08-23

STEEL MANIFOLD

FILLING LINE - SECTIONS AND DETAILS

1695-D-60609

SHEET 15

Released

DATE AND TIME PLOTTED Not Plotted
PLOTTED BY Not Plotted

CAD SYSTEM AUTOCAD
CAD FILENAME UNKNOWN

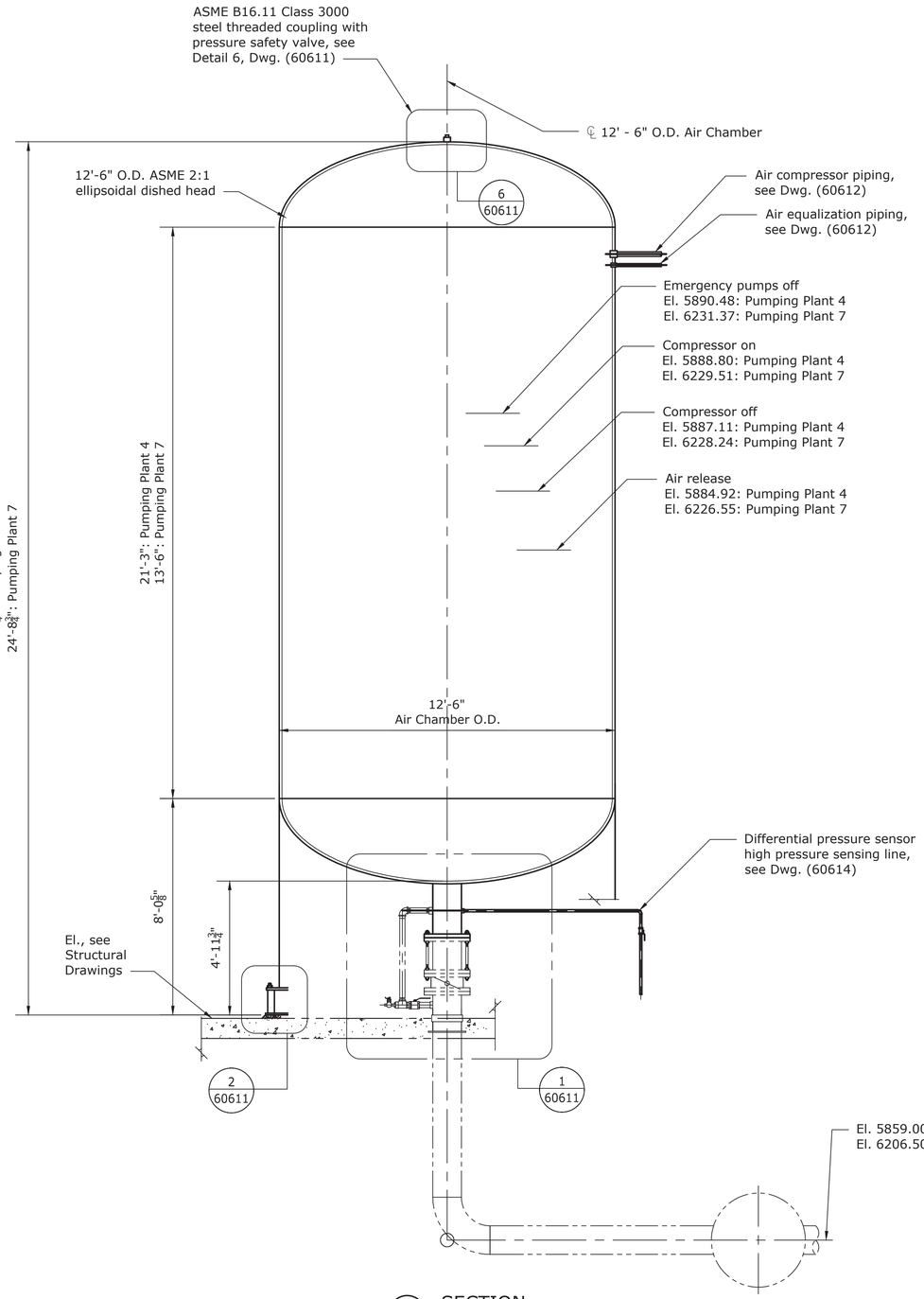

A SECTION
3/8"=1'

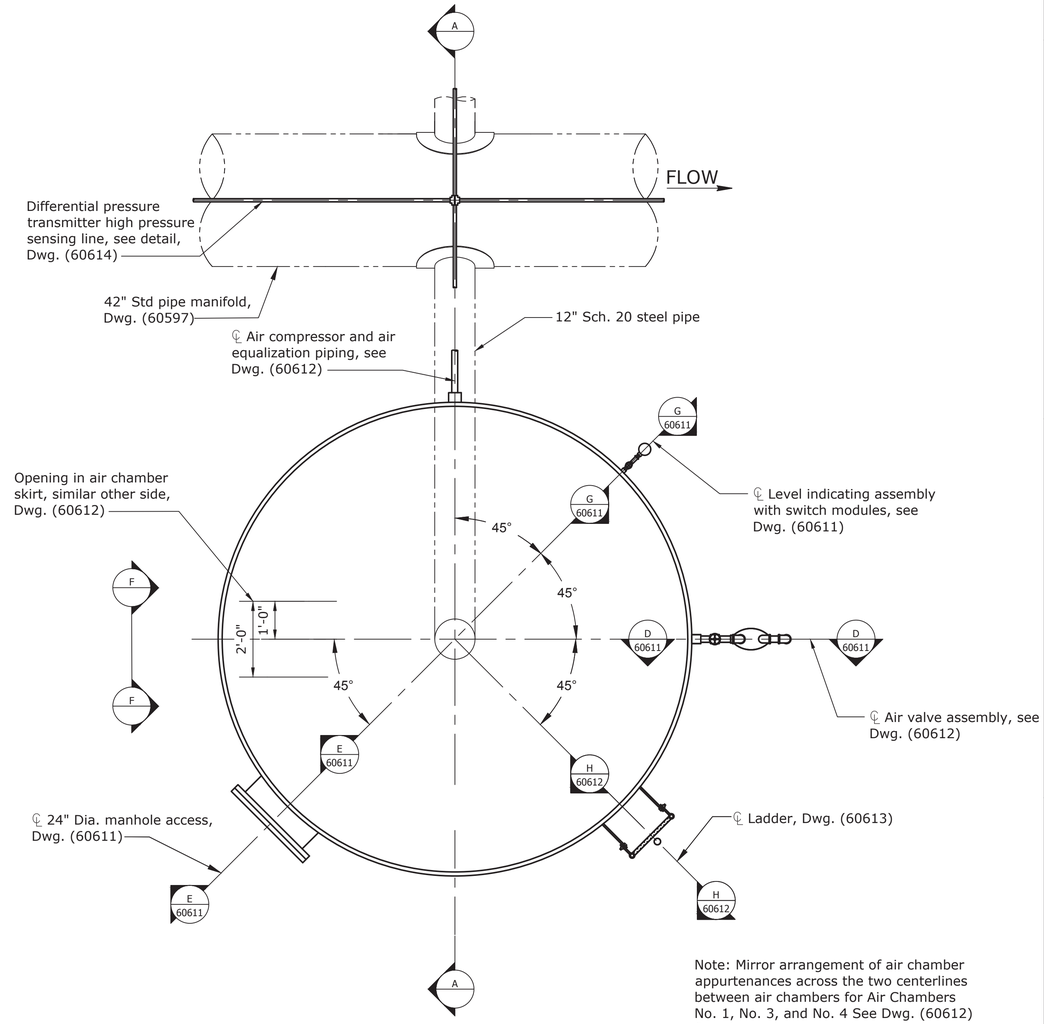

Note: Mirror arrangement of air chamber appurtenances across the two centerlines between air chambers for Air Chambers No. 1, No. 3, and No. 4 See Dwg. (60612) for general arrangement.

AIR CHAMBER NO. 2 PLAN
(Air chambers No. 1, No. 3, and No. 4 similar)

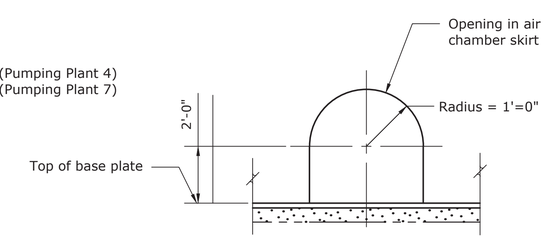

F SECTION
1"=1'

(2 REQUIRED FOR EACH AIR CHAMBER)

NOTES

1. For General Notes, see Dwg. (60595).
2. For wind and earthquake loads, see Dwg. (60399).

RECLAMATION
Managing Water in the West

ALWAYS THINK SAFETY

U.S. DEPARTMENT OF THE INTERIOR
BUREAU OF RECLAMATION
NAVAJO-GALLUP WATER SUPPLY PROJECT
NEW MEXICO

SAN JUAN LATERAL

PUMPING PLANT NOS. 4 AND 7

Kent Schlundt
DESIGNED
Rex Schlosser
DRAWN
Kent Schlundt
CHECKED
Adams, Lucas P.E.
TECH. APPR.
Hummel, Terry L
APPROVED
ADMIN APPROVAL - Mgr Hydr Equip

DENVER, CO 2018-08-23

AIR CHAMBERS

PLAN AND SECTIONS

1695-D-60610

SHEET 1

Released

DATE AND TIME PLOTTED Not Plotted
PLOTTED BY Not Plotted

CAD SYSTEM AUTOCAD
CAD FILENAME UNKNOWN

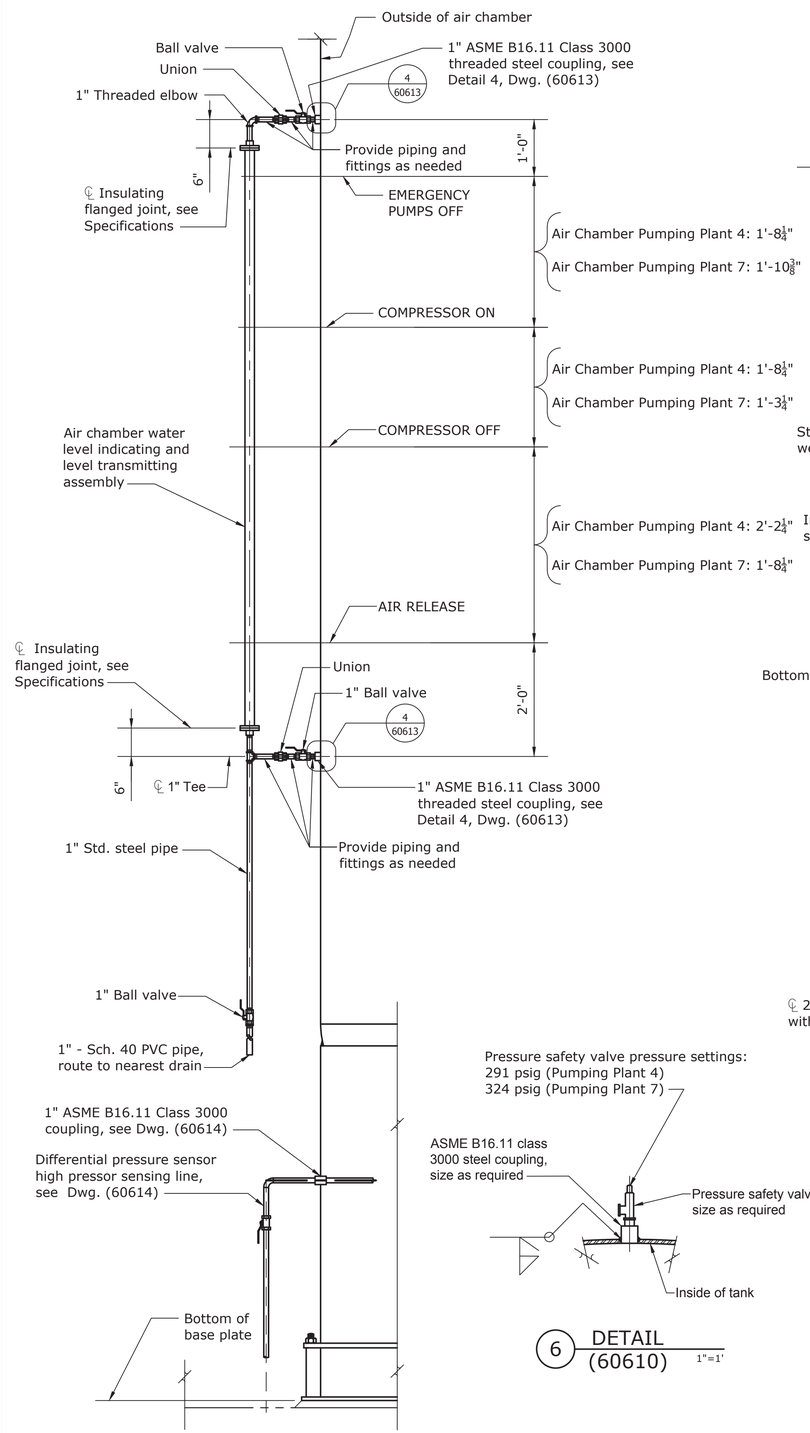

G SECTION (60610) 3/4"=1'

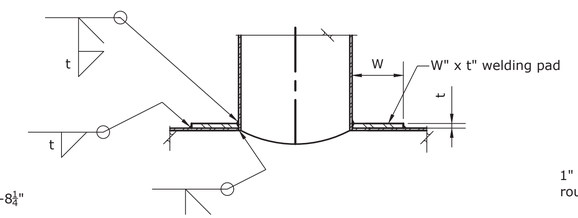

WELDING PAD

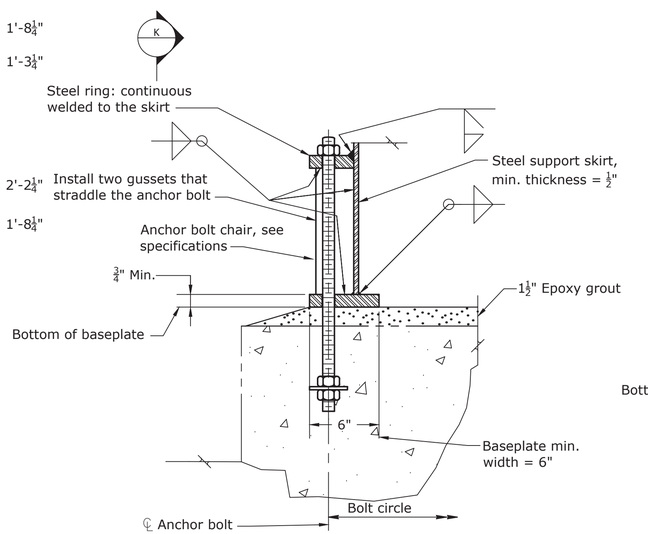

2 DETAIL (60610) 2" = 1'

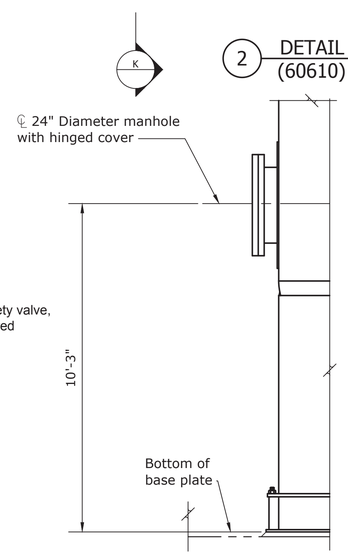

E SECTION (60610) 1/2"=1'

6 DETAIL (60610) 1"=1'

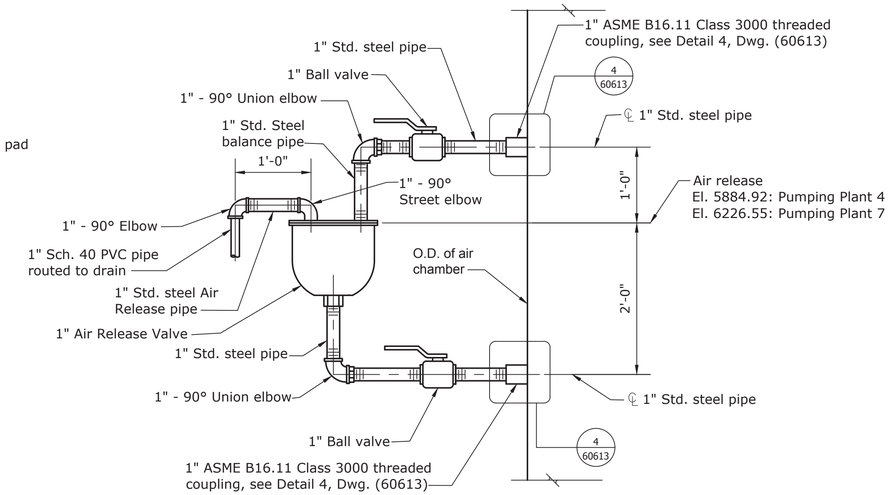

D SECTION (60610) 1"=1'

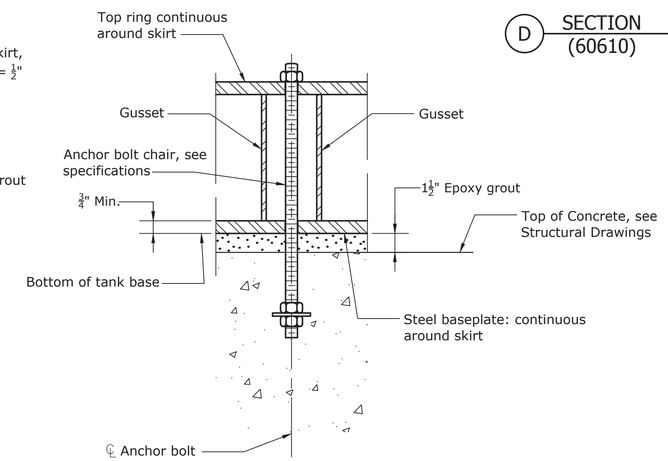

K SECTION 2" = 1'

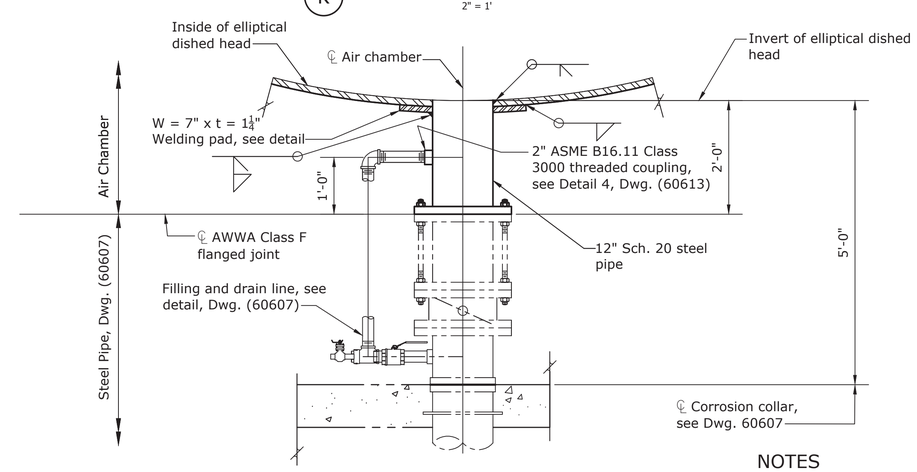

1 DETAIL (60610) 3/4"=1'

NOTES

1. For General Notes, see Dwg. (60595).

RECLAMATION
Managing Water in the West

ALWAYS THINK SAFETY

U.S. DEPARTMENT OF THE INTERIOR
BUREAU OF RECLAMATION
NAVAJO-GALLUP WATER SUPPLY PROJECT
NEW MEXICO

SAN JUAN LATERAL
PUMPING PLANT NOS. 4 AND 7

REV. NO. 1 | 2018-11-02 | Schlundt, Kent C | D GENERAL REVISIONS

Kent Schlundt
DESIGNED
Rex Schlosser
DRAWN
Kent Schlundt
CHECKED
Adams, Lucas P.E.
TECH. APPR.
Hummel, Terry L
APPROVED
ADMIN APPROVAL - Mgr Hydr Equip

DENVER, CO 2018-08-23

AIR CHAMBERS

SECTIONS AND DETAILS

1695-D-60611

SHEET 2

Released

DATE AND TIME PLOTTED Not Plotted
PLOTTED BY Not Plotted

CAD SYSTEM AUTOCAD
CAD FILENAME UNKNOWN

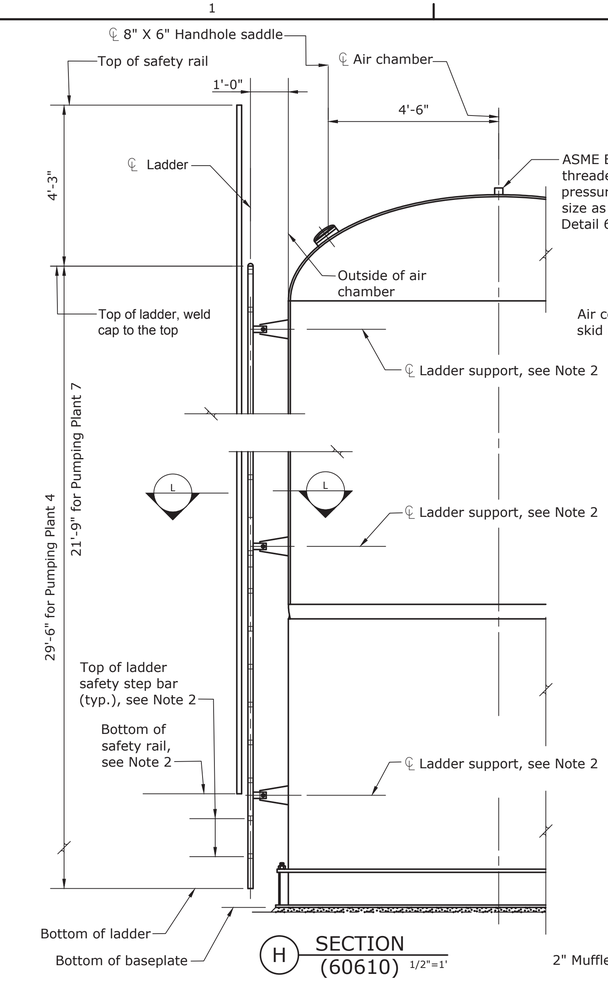

H SECTION (60610) 1/2"=1'

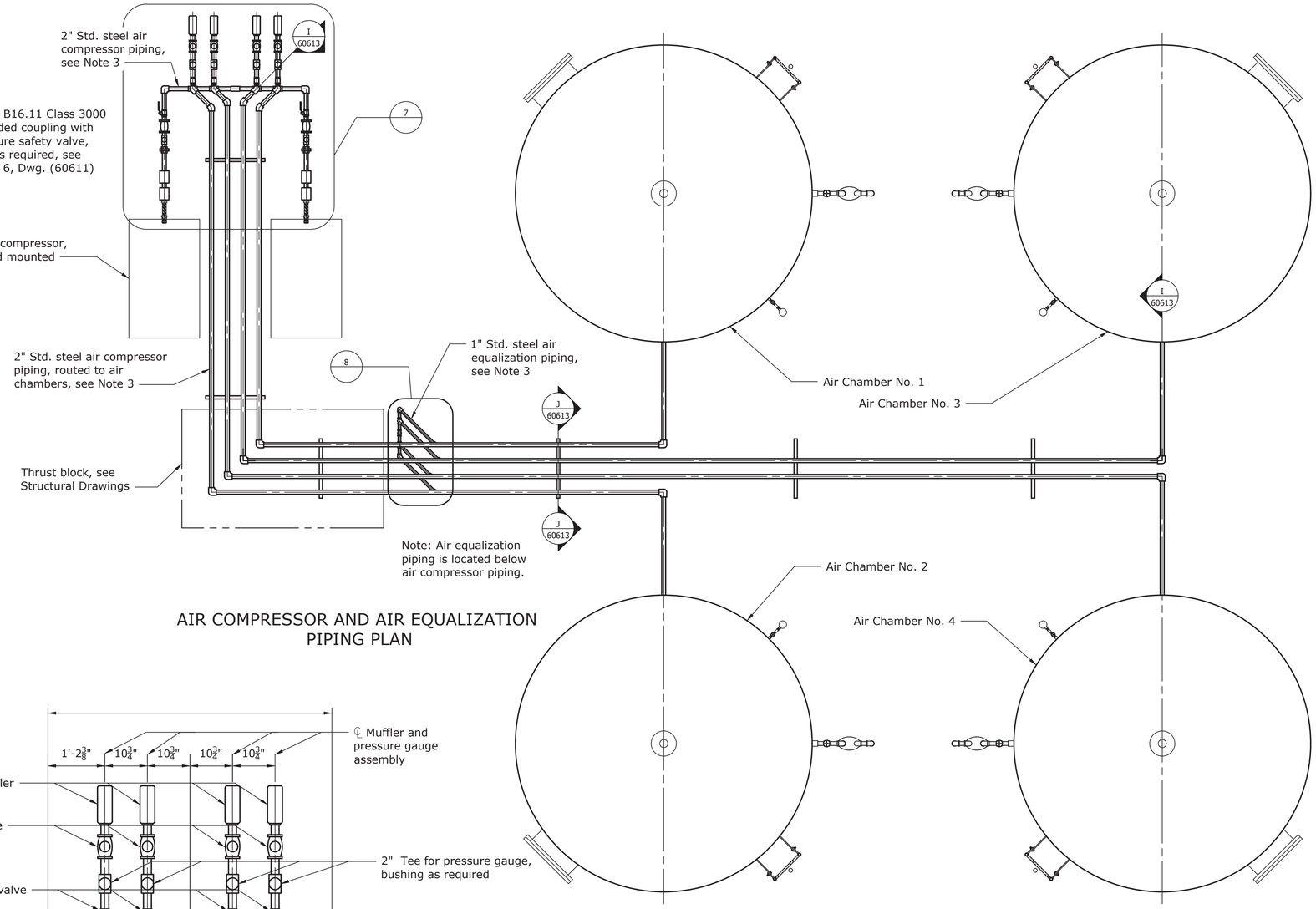

AIR COMPRESSOR AND AIR EQUALIZATION PIPING PLAN

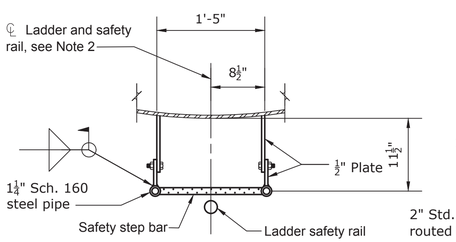

L SECTION 1"=1'

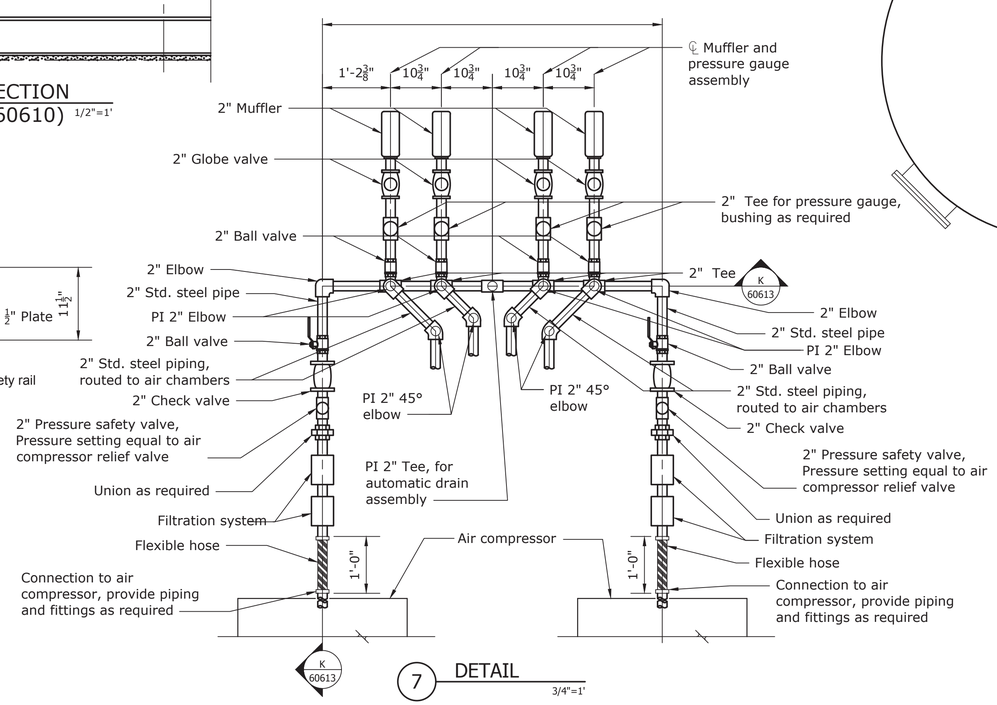

7 DETAIL 3/4"=1'

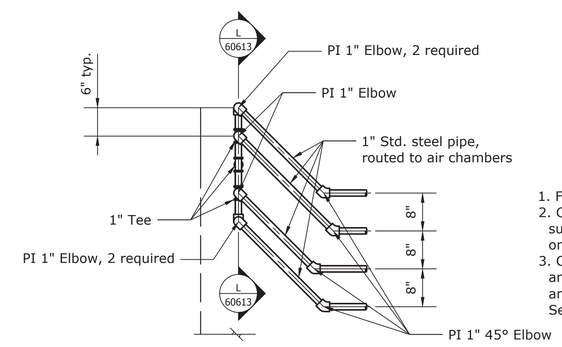

Note: Air compressor piping not shown. Air compressor piping is located above air equalization piping

8 DETAIL 3/4"=1'

NOTES

1. For General Notes, see Dwg. (60595).
2. Contractor to design ladder and ladder supports. Supports shown are conceptual only. See specifications.
3. Contractor to design air compressor piping and piping supports. Air compressor piping and piping supports are conceptual only. See specifications.

RECLAMATION
Managing Water in the West

ALWAYS THINK SAFETY

U.S. DEPARTMENT OF THE INTERIOR
BUREAU OF RECLAMATION
NAVAJO-GALLUP WATER SUPPLY PROJECT
NEW MEXICO

SAN JUAN LATERAL
PUMPING PLANT NOS. 4 AND 7

Rex Schlosser DESIGNED
Rex Schlosser DRAWN
Kent Schlundt CHECKED
Adams, Lucas P.E. TECH. APPR.
Hummel, Terry L APPROVED
ADMIN APPROVAL - Mgr Hydr Equip
DENVER, CO 2018-08-23

AIR CHAMBERS

AIR COMPRESSOR AND EQUALIZATION PIPING - PLAN, SECTIONS AND DETAILS

1695-D-60612

SHEET 3

Released

DATE AND TIME PLOTTED Not Plotted
PLOTTED BY Not Plotted
CAD SYSTEM AUTOCAD
CAD FILENAME UNKNOWN

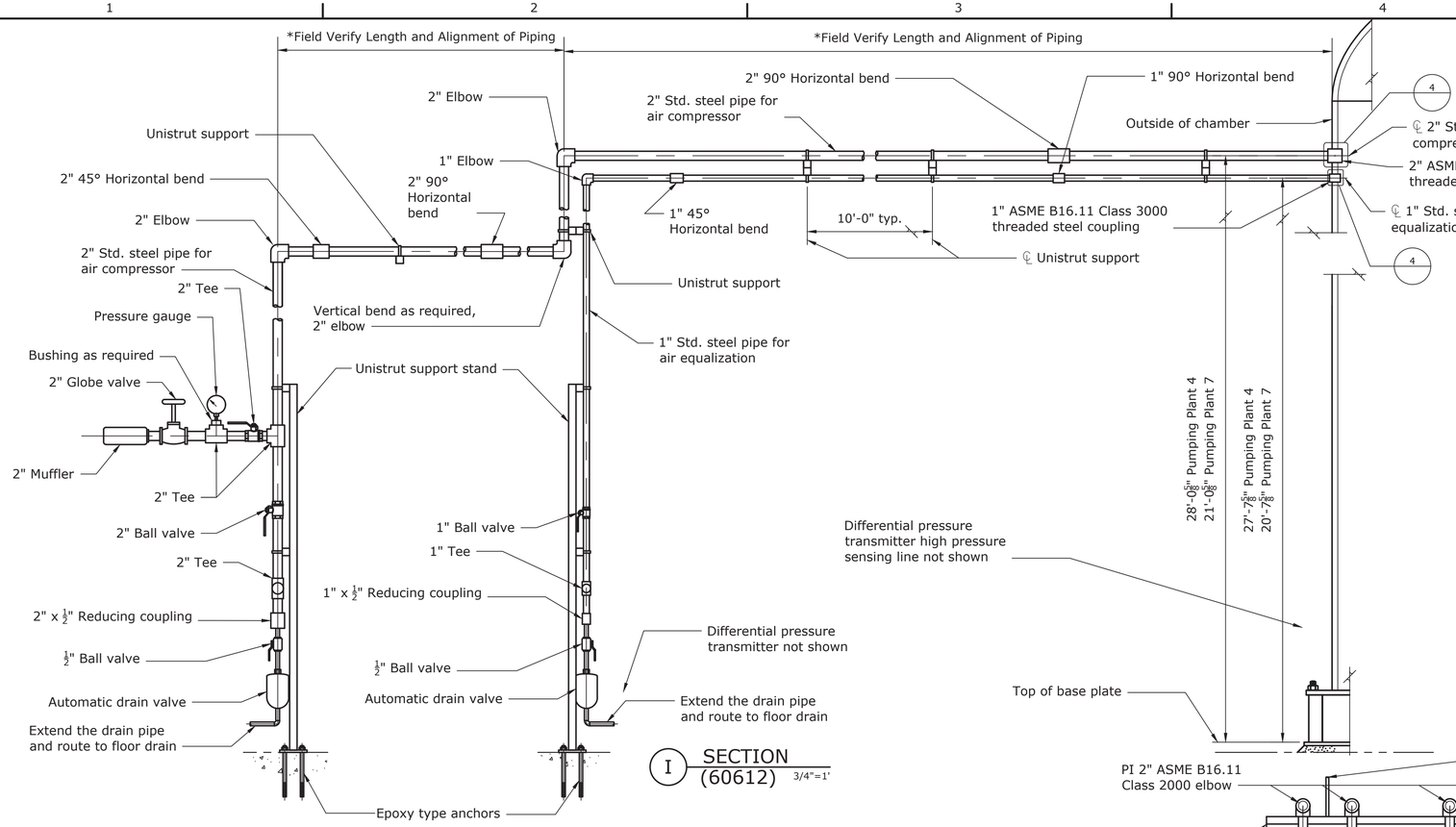

I SECTION (60612) 3/4"=1'

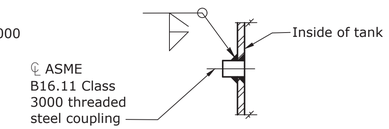

4 DETAIL (60611) 1"=1'

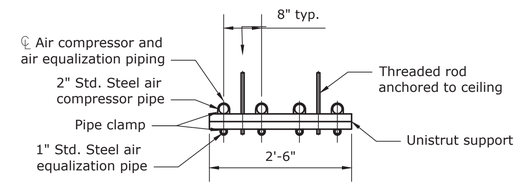

J SECTION (60612) 3/4"=1'

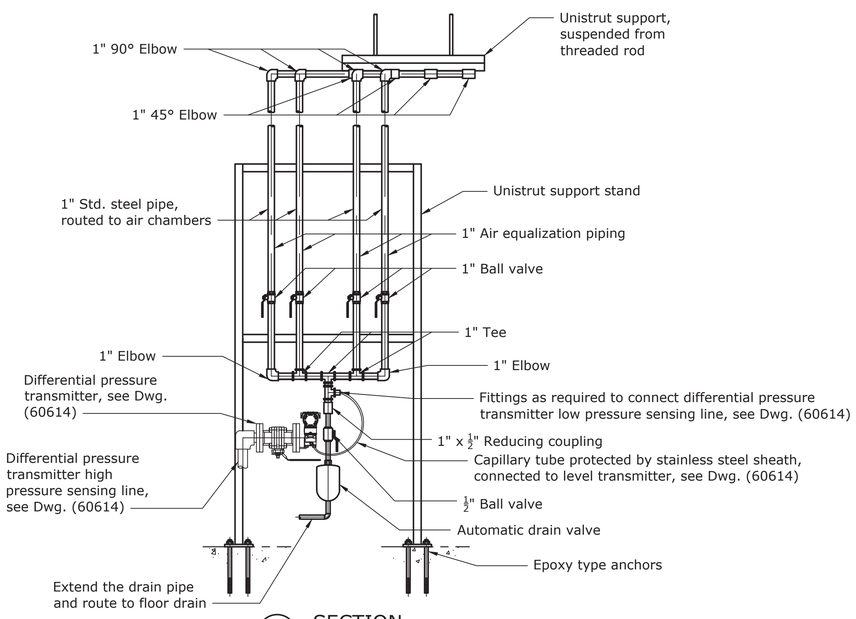

L SECTION (60612) 3/4"=1'

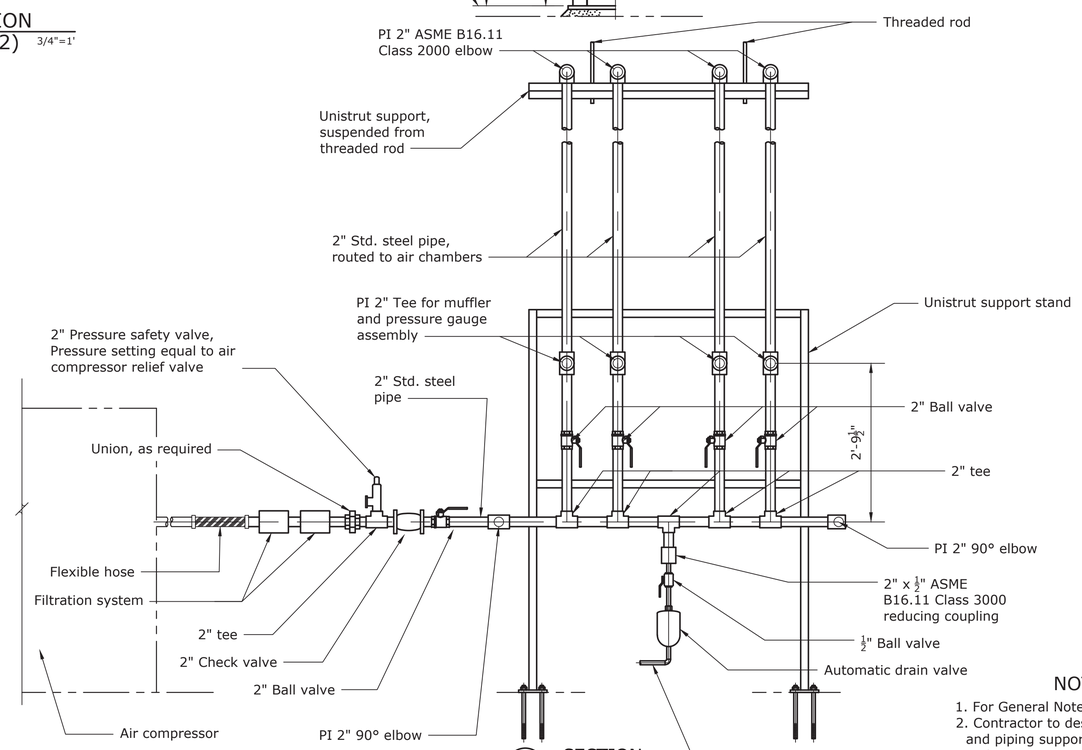

K SECTION (60612) 3/4"=1'

NOTES

1. For General Notes, see Dwg. (60595).
2. Contractor to design air compressor piping and piping supports. Air compressor piping and piping supports are conceptual only. See specifications.

RECLAMATION
Managing Water in the West

ALWAYS THINK SAFETY

U.S. DEPARTMENT OF THE INTERIOR
BUREAU OF RECLAMATION
NAVAJO-GALLUP WATER SUPPLY PROJECT
NEW MEXICO

SAN JUAN LATERAL

PUMPING PLANT NOS. 4 AND 7

Rex Schlosser
DESIGNED
Rex Schlosser
DRAWN
Kent Schlundt
CHECKED
Adams, Lucas P.E.
TECH. APPR.
Hummel, Terry L
APPROVED
ADMIN APPROVAL - Mgr Hydr Equip

DENVER, CO 2018-08-23

AIR CHAMBERS

AIR COMPRESSOR AND EQUALIZATION PIPING - SECTIONS AND DETAILS

1695-D-60613

SHEET 4

Released

DATE AND TIME PLOTTED Not Plotted
PLOTTED BY Not Plotted

CAD SYSTEM AUTOCAD
CAD FILENAME UNKNOWN

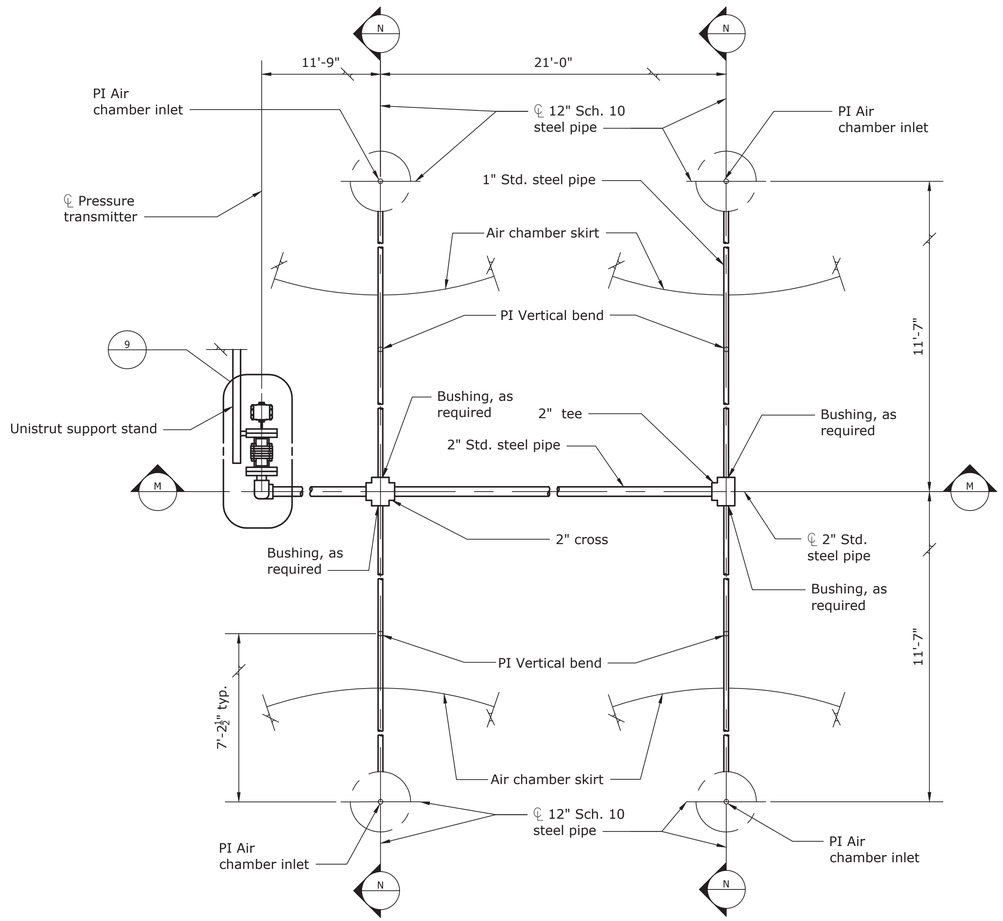

DIFFERENTIAL PRESSURE TRANSMITTER
HIGH PRESSURE SENSING LINE PLAN
(60610, 60611, 60613)

Note: Air compressor and air equalization piping not shown

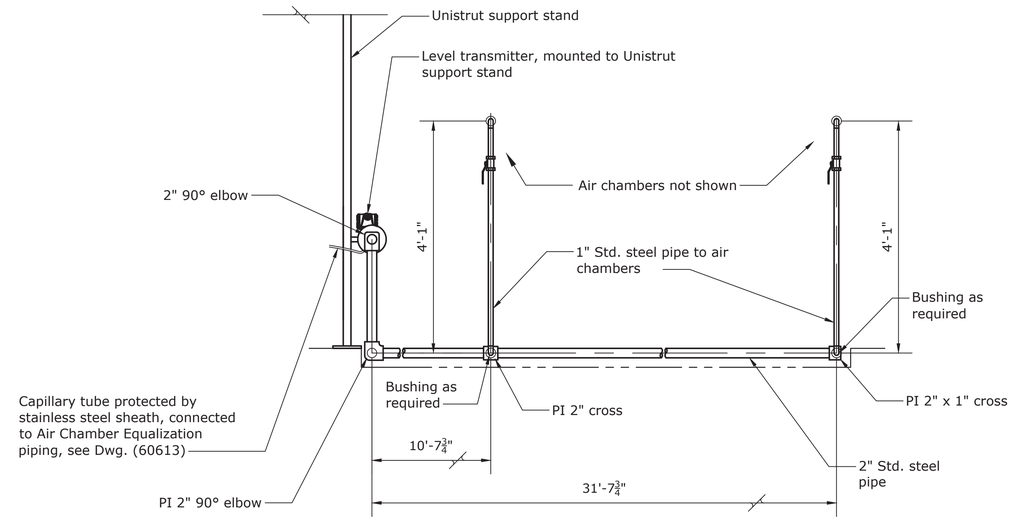

Note: Air equalization piping not shown

M SECTION
3/4"=1'

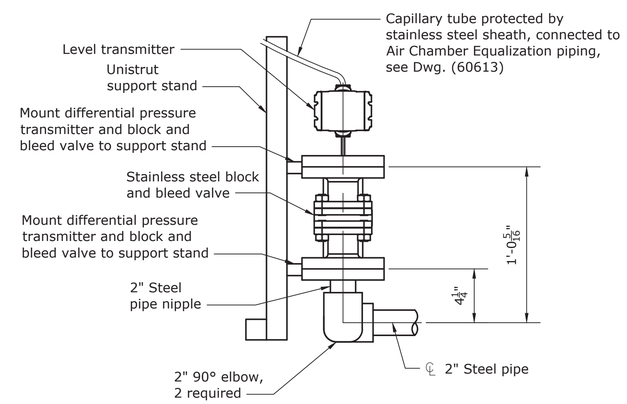

9 DETAIL
2"=1'

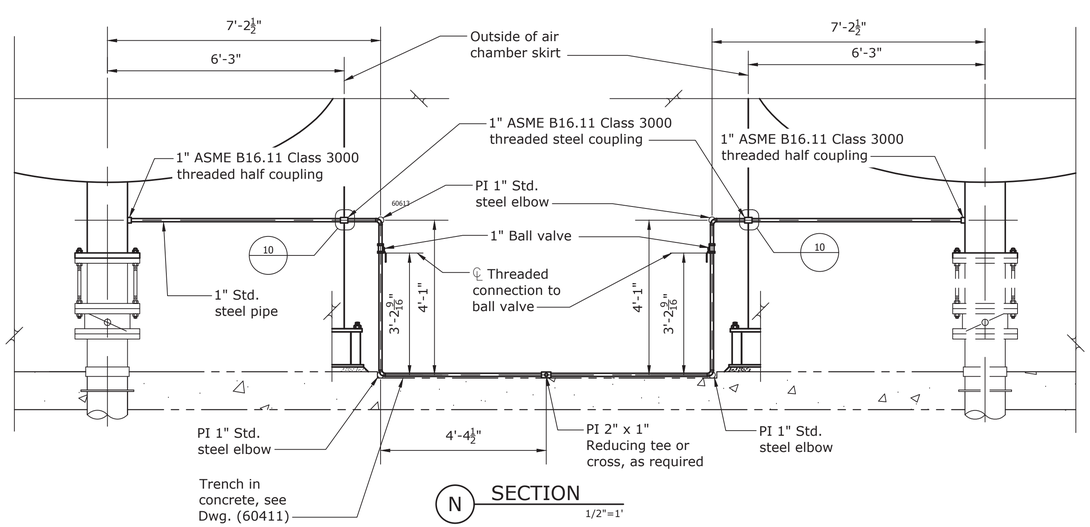

N SECTION
1/2"=1'

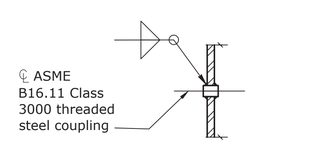

10 DETAIL
1"=1'

NOTES

1. For General Notes, see Dwg. (60595).

RECLAMATION
Managing Water in the West

ALWAYS THINK SAFETY

U.S. DEPARTMENT OF THE INTERIOR
BUREAU OF RECLAMATION
NAVAJO-GALLUP WATER SUPPLY PROJECT
NEW MEXICO

SAN JUAN LATERAL

PUMPING PLANT NOS. 4 AND 7

Rex Schlosser
DESIGNED
Rex Schlosser
DRAWN
Kent Schlundt
CHECKED
Adams, Lucas P.E.
TECH. APPR.
Hummel, Terry L
APPROVED
ADMIN APPROVAL - Mgr Hydr Equip

DENVER, CO 2018-08-23

AIR CHAMBERS

PLAN, SECTIONS AND DETAIL

1695-D-60614

SHEET 5

Released

DATE AND TIME PLOTTED Not Plotted
PLOTTED BY Not Plotted

CAD SYSTEM AUTOCAD
CAD FILENAME UNKNOWN

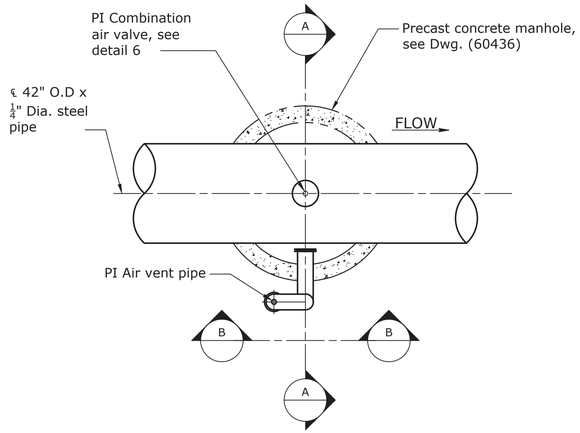

3 DETAIL (60601) 3/8"=1'

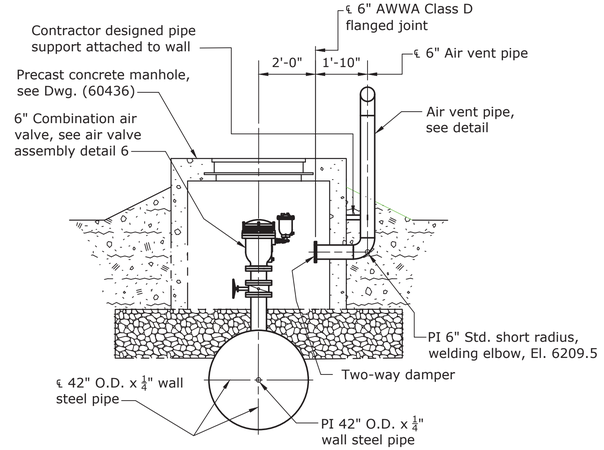

A SECTION 3/8"=1'

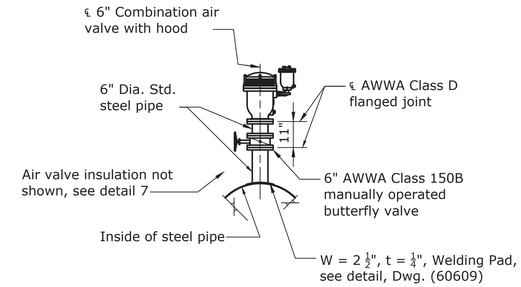

6 DETAIL 3/8"=1'

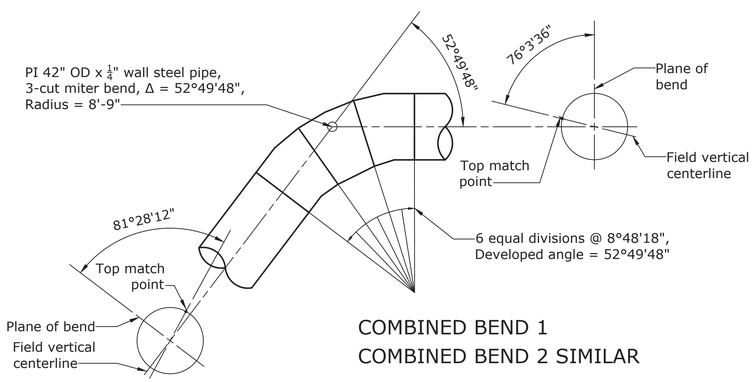

COMBINED BEND 1
COMBINED BEND 2 SIMILAR

1 DETAIL (60601) 1/4"=1'

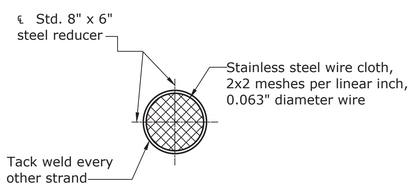

8 DETAIL 1-1/2"=1'

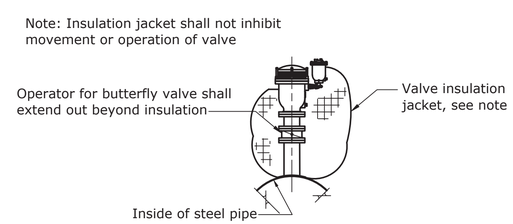

7 DETAIL 3/8"=1'

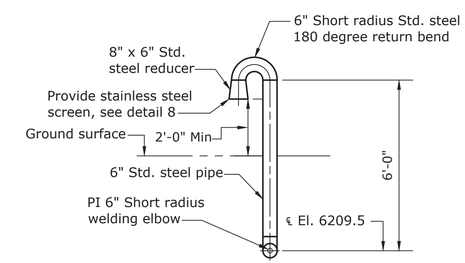

B SECTION 3/8"=1'

NOTES

1. For General Notes, see Dwg. (60595).

RECLAMATION
Managing Water in the West

ALWAYS THINK SAFETY

U.S. DEPARTMENT OF THE INTERIOR
BUREAU OF RECLAMATION
NAVAJO-GALLUP WATER SUPPLY PROJECT
NEW MEXICO

SAN JUAN LATERAL

PUMPING PLANT NOS. 4 AND 7

REV. NO.	DATE	DESCRIPTION	BY
1	2020-01-21	GENERAL REVISIONS	D P.E. Stephen, Ryan

Kent Schlundt — DESIGNED
Amy Young — DRAWN
Kent Schlundt — CHECKED
Schlundt, Kent C P.E. — TECH. APPR.
Hummel, Terry L — APPROVED
ADMIN APPROVAL - Mgr Hydr Equip

DENVER, CO 2018-08-24

STEEL MANIFOLD

VALVES IN VAULTS - SECTIONS AND DETAILS

1695-D-60621

SHEET 16

Released

DATE AND TIME PLOTTED Not Plotted
PLOTTED BY Not Plotted

CAD SYSTEM AUTOCAD
CAD FILENAME UNKNOWN

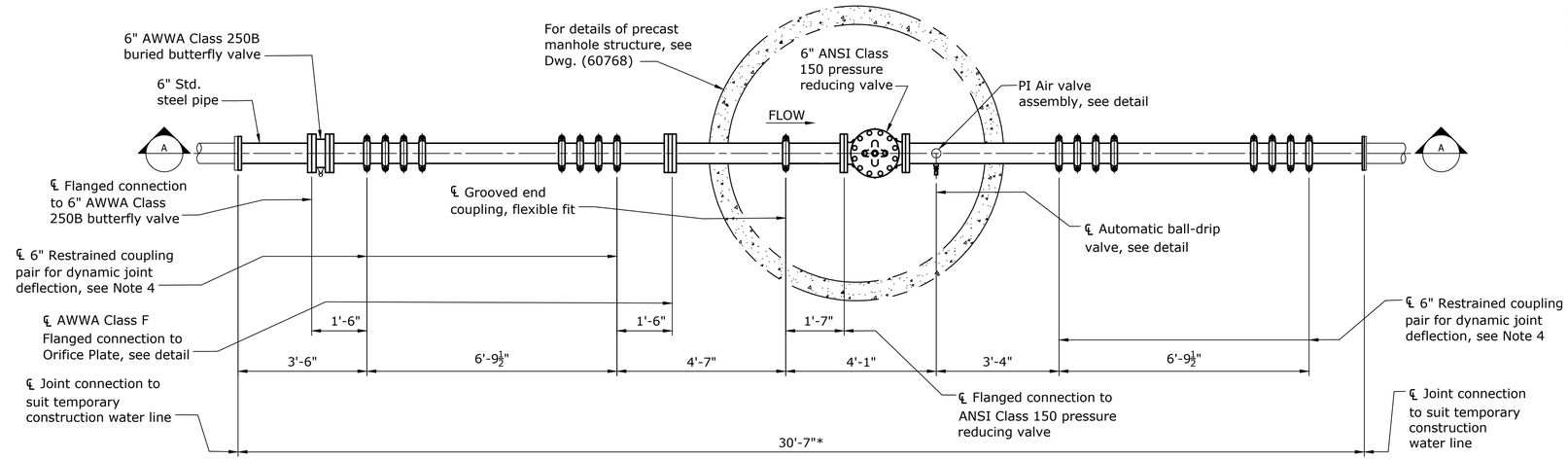

PLAN

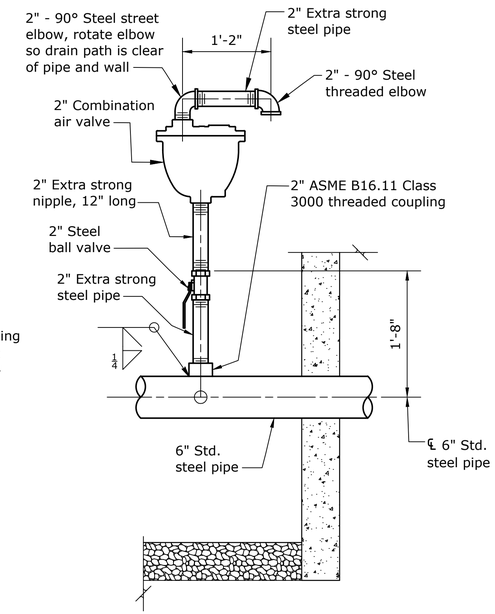

AIR VALVE ASSEMBLY

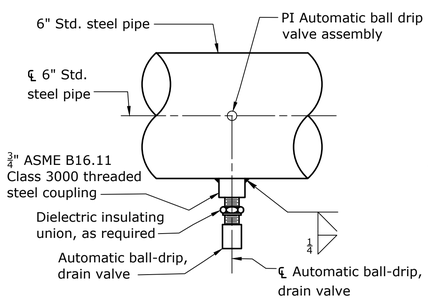

AUTOMATIC BALL DRIP VALVE

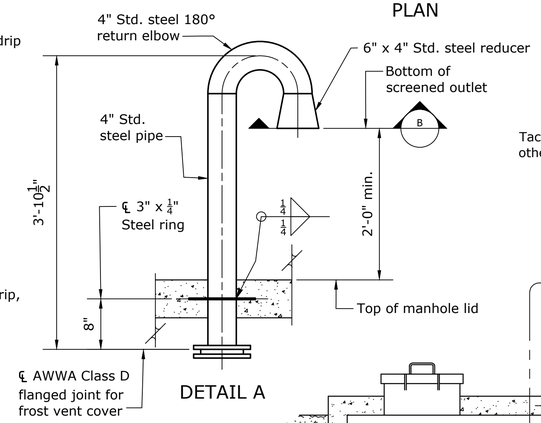

DETAIL A

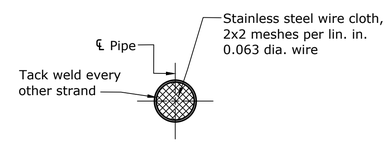

SECTION B-B

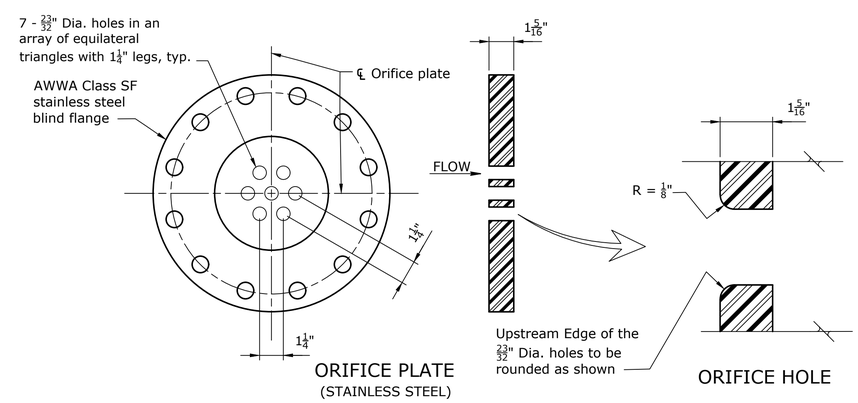

ORIFICE PLATE
(STAINLESS STEEL)

ORIFICE HOLE

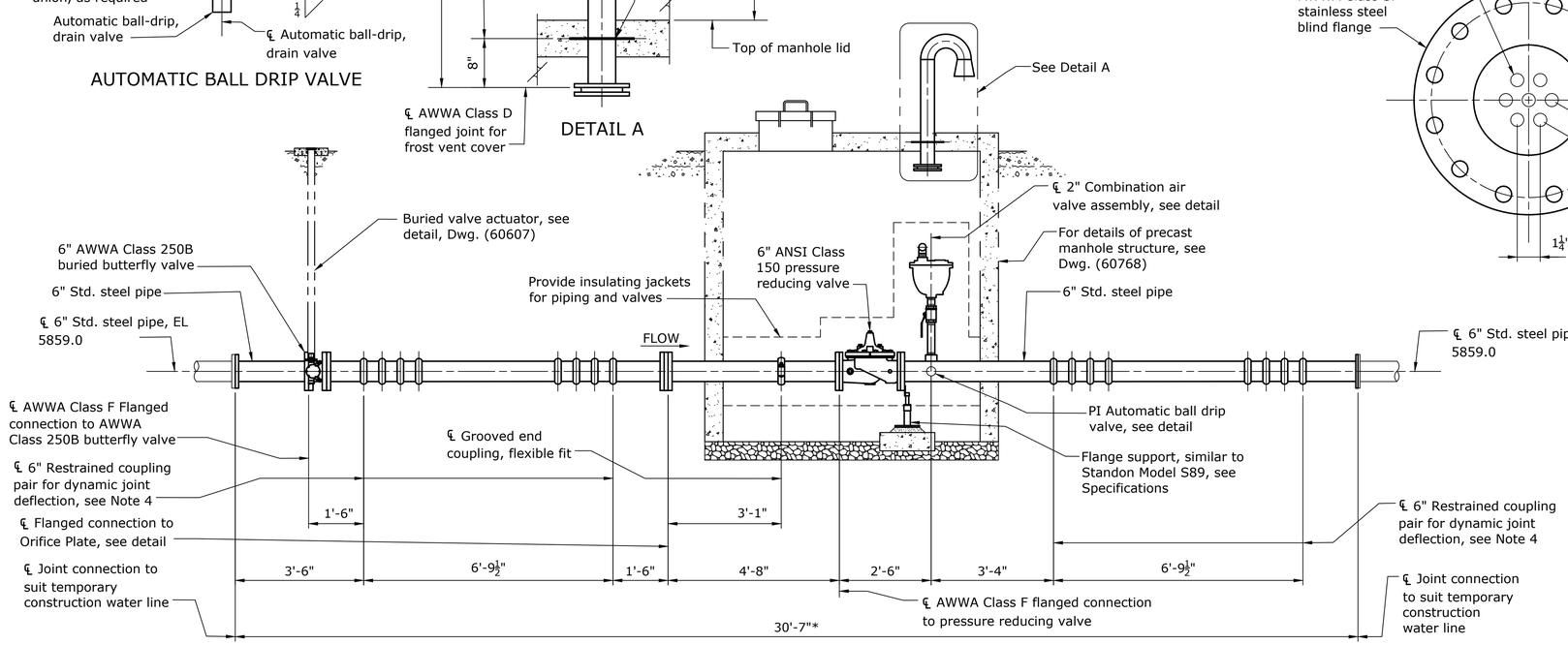

SECTION A-A

NOTES

1. Provide nuts, bolts, and gaskets suitable for cold water service.
2. At locations where fittings have a greater wall thickness than steel piping, machine to match lighter pipe wall and taper excess thickness internally to form transition.
3. Welding symbols apply to joints of all members of similar identification.
4. Coupling manufacturer to determine distance between restrained coupling pairs for dynamic joint deflection. Couplings to accomodate 3" of movement.
5. Dimensions marked with an asterisk (*) are to be field verified.

RECLAMATION
Managing Water in the West

ALWAYS THINK SAFETY

U.S. DEPARTMENT OF THE INTERIOR
BUREAU OF RECLAMATION
NAVAJO-GALLUP WATER SUPPLY PROJECT
NEW MEXICO

SAN JUAN LATERAL

PUMPING PLANT NOS. 4 AND 7

Rex Schlosser
DESIGNED
Rex Schlosser
DRAWN
Kent Schlundt
CHECKED
Adams, Lucas P.E.
TECH. APPR.
Stephen, Ryan D P.E.
APPROVED
ADMIN APPROVAL - Hydraulic Equipment Group Manager

DENVER, CO 2020-03-03

TEMPORARY CONSTRUCTION WATER LINE

PLAN, SECTION, AND DETAILS

1695-D-60504

SHEET 1

Released

DATE AND TIME PLOTTED Not Plotted
PLOTTED BY Not Plotted

CAD SYSTEM AUTOCAD
CAD FILENAME UNKNOWN

Drawing 1695-D-60524 has been DELETED from this package.

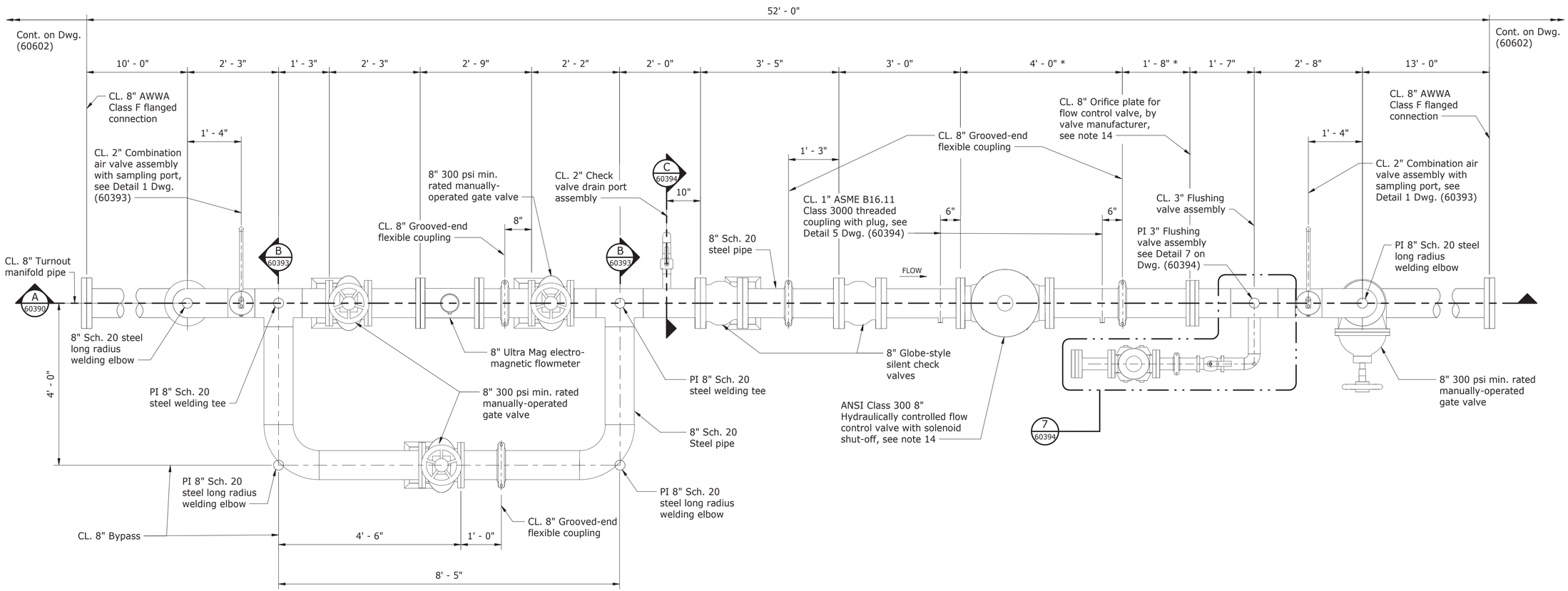

TOHATCHI TURNOUT PLAN

GENERAL NOTES

1. Provide nuts, bolts and gaskets suitable for cold water service.
2. All flanges shall be AWWA Class F as shown unless otherwise noted.
3. Additional fittings, flanges, or welded joints added by the contractor to facilitate installation of the piping are subject to Government approval.
4. All elbows should be long radius unless otherwise noted.
5. Factory-made wrought buttwelding fittings end preparation: Straight bore followed by a 30 deg. slope or a taper bore at a maximum slope of 1 to 4 for a minimum distance of 2 times the pipe minimum wall.
6. Set grooved coupling gap to 1/2 of manufacturer's maximum allowable pipe end separation.
7. Thread-O-Let type fittings may be substituted for the 3000 lb. steel threaded couplings and threaded half-couplings. Weld Thread-O-Let fittings to pipe as recommended by Thread-O-Let manufacturer.
8. Welding symbols apply to the joints of all members of similar identification.
9. Hydrostatic test pressure for the Sheep Springs turnout steel pipe: 402 psig.
10. Hydrostatic test pressure for the Tohatchi turnout steel pipe: 450 psig.
11. Dimensions marked with an asterisk (*) to be field verified.
12. Use epoxy grout for flange supports as shown on drawing 40-D-7018.
13. All valves and equipment to be rated for a minimum 300 psi working pressure.
14. Locate and install flow control valve, orifice plate, and sensing line per flow control valve manufacturer's recommendations. It is understood that different control valve manufacturers have orifice plates in different locations. General layout is shown. Actual layout may vary.
15. Provide ASME Class 300 flanges as flat faced or raised faced to match valve flanges.
16. Provide control valve flange supports to match control valve flanges, round or flat bottomed.

RECLAMATION
Managing Water in the West

ALWAYS THINK SAFETY

U.S. DEPARTMENT OF THE INTERIOR
BUREAU OF RECLAMATION
NAVAJO GALLUP WATER SUPPLY PROJECT
NEW MEXICO

SAN JUAN LATERAL
PUMPING PLANT NOS. 4 AND 7

K. Schlundt
DESIGNED
A. Young
DRAWN
A. Young
CHECKED
TECH. APPR. K. Schlundt, P.E.
APPROVED Ryan Stephen, P.E.
Admin Approver - Hydraulic Equipment Group

DENVER, CO 2020-01-24

TOHATCHI TURNOUT BUILDING

PIPING AND VALVES PLAN

1695-D-60389
Sheet 1

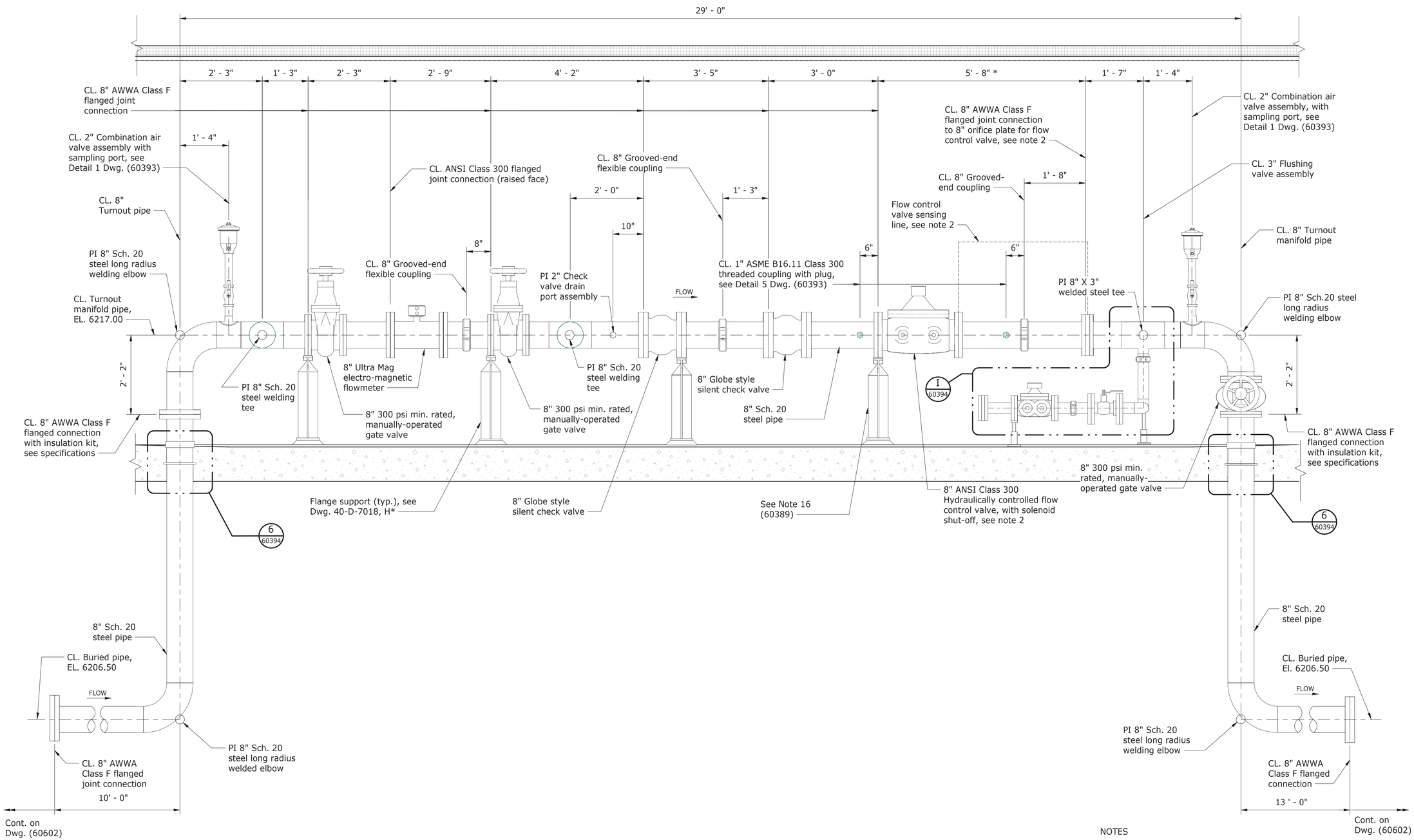

NOTES

1. See Dwg. (60389) for General Notes.
2. Locate and install flow control valve, orifice plate, and sensing line per flow control valve manufacturer's recommendations. It is understood that different control valve manufacturers have orifice plates in different locations. General layout is shown. Actual layout may vary.

A TOHATCHI TURNOUT SECTION
Scale: 3/4" = 1'-0"

RECLAMATION
Managing Water in the West

ALWAYS THINK **SAFETY**

U.S. DEPARTMENT OF THE INTERIOR
BUREAU OF RECLAMATION

NAVAJO GALLUP WATER SUPPLY PROJECT
NEW MEXICO

SAN JUAN LATERAL
PUMPING PLANT NOS. 4 AND 7

DESIGNED	K. Schlundt
DRAWN	A. Young
CHECKED	A. Young
TECH. APPR.	K. Schlundt, P.E.
APPROVED	Ryan Stephen, P.E. Admin Approver - Hydraulic Equipment Group
DENVER, CO	2020-01-24

TOHATCHI TURNOUT BUILDING

PIPING AND VALVES SECTION

1695-D-60390
Sheet 2

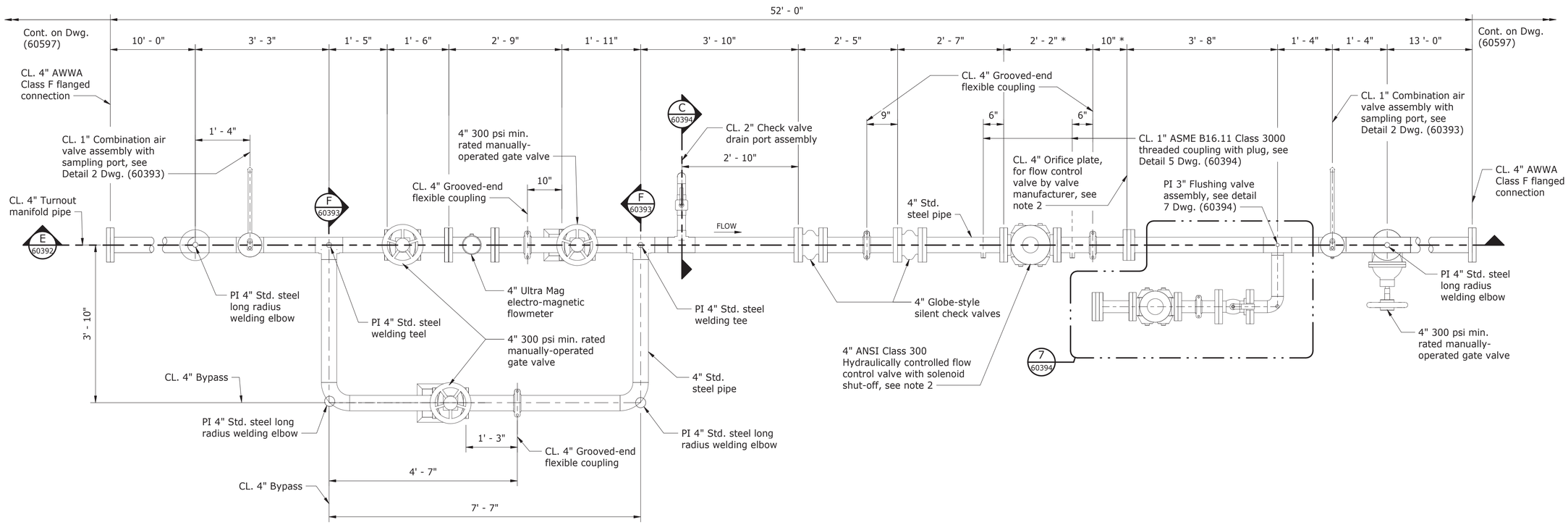

SHEEP SPRINGS TURNOUT PLAN

NOTES

1. See dwg (60389) for General Notes.
2. Locate and install flow control valve, orifice plate, and sensing line per flow control valve manufacturer's recommendations. It is understood that different control valve manufacturers have orifice plates in different locations. General layout is shown. Actual layout may vary.

RECLAMATION
Managing Water in the West

ALWAYS THINK SAFETY

U.S. DEPARTMENT OF THE INTERIOR
BUREAU OF RECLAMATION
NAVAJO GALLUP WATER SUPPLY PROJECT
NEW MEXICO

SAN JUAN LATERAL
PUMPING PLANT NOS. 4 AND 7

K. Schlundt
DESIGNED
A. Young
DRAWN
A. Young
CHECKED
TECH. APPR. K. Schlundt, P.E.
APPROVED Ryan Stephan, P.E.
Admin Approver - Hydraulic Equipment Group

DENVER, CO 2020-01-24

SHEEP SPRINGS TURNOUT BUILDING

PIPING AND VALVES PLAN

1695-D-60391
Sheet 3

RECLAMATION
Managing Water in the West

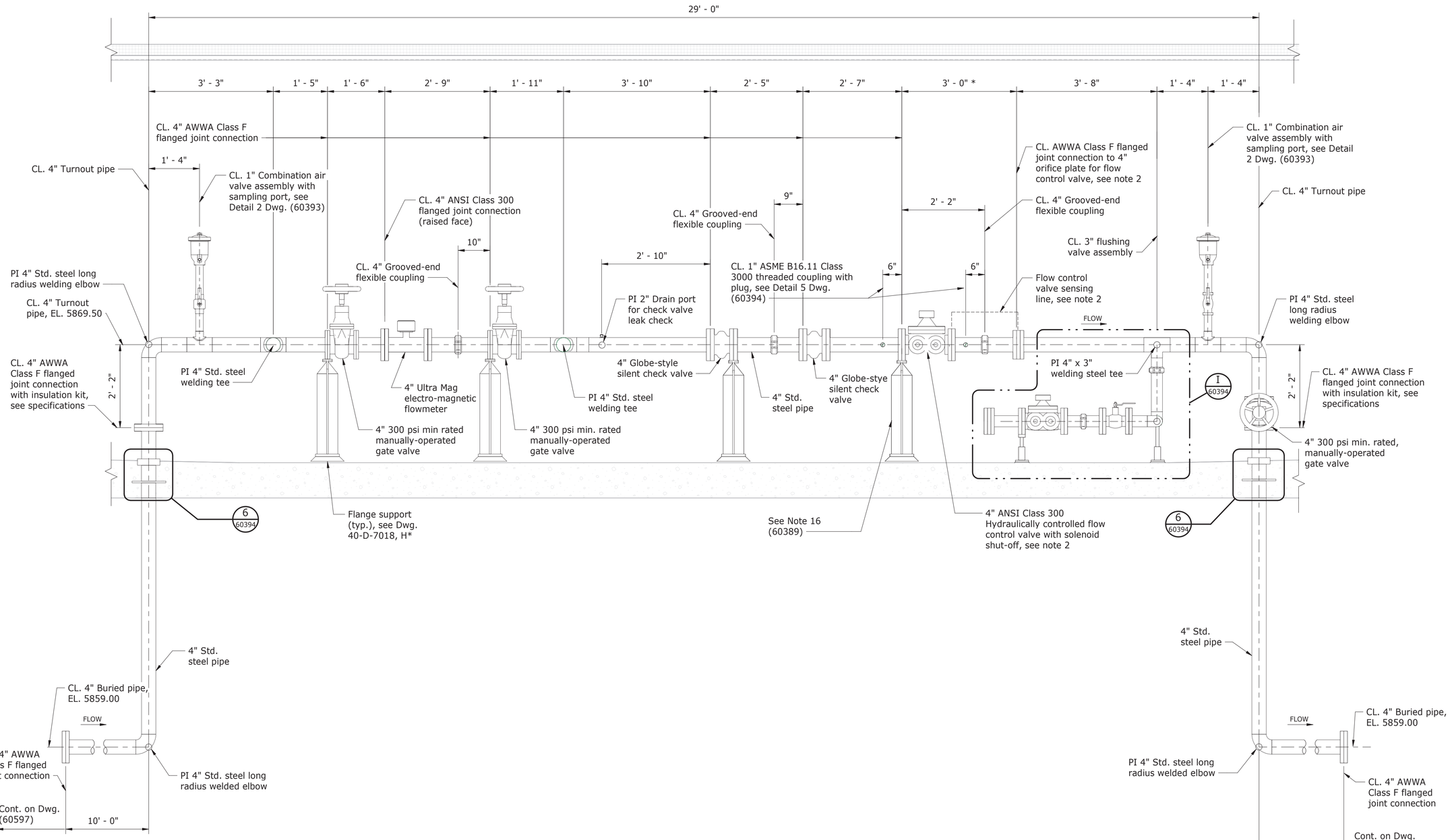

E 60391 SECTION
Scale: 3/4" = 1'-0"

NOTES

1. See Dwg. (60389) for General Notes.
2. Locate and install flow control valve, orifice plate, and sensing line per flow control valve manufacturer's recommendations. It is understood that different control valve manufacturers have orifice plates in different locations. General layout is shown. Actual layout may vary.

ALWAYS THINK **SAFETY**

U.S. DEPARTMENT OF THE INTERIOR
BUREAU OF RECLAMATION

NAVAJO GALLUP WATER SUPPLY PROJECT
NEW MEXICO

SAN JUAN LATERAL
PUMPING PLANT NOS. 4 AND 7

K. Schlundt
DESIGNED
A. Young
DRAWN
A. Young
CHECKED
TECH. APPR. K. Schlundt, P.E.
APPROVED Ryan Stephen, P.E.
Admin Approver - Hydraulic Equipment Group

DENVER, CO 2020-01-24

SHEEP SPRINGS TURNOUT BUILDING

PIPING AND VALVES SECTION

1695-D-60392
Sheet 4

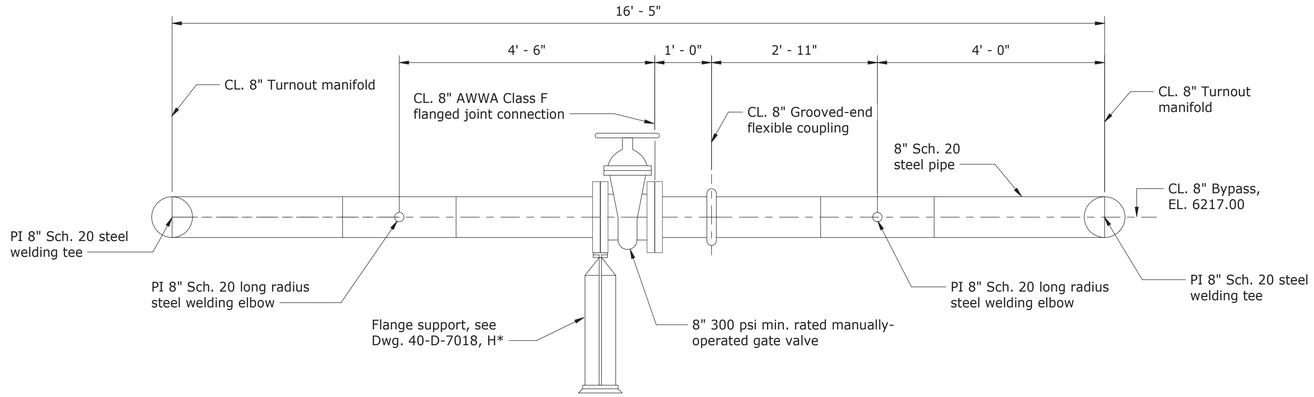

B 60389 TOHATCHI TURNOUT BYPASS SECTION
Scale: 3/4" = 1'-0"

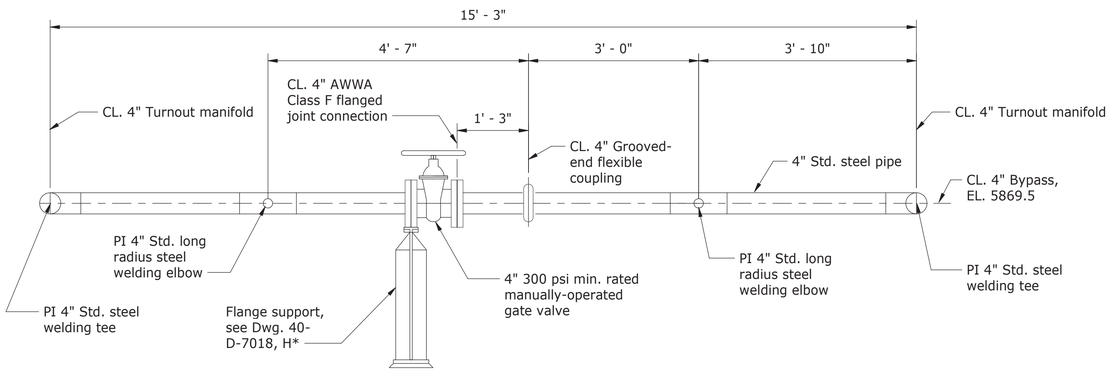

F 60391 SHEEP SPRINGS TURNOUT BYPASS SECTION
Scale: 3/4" = 1'-0"

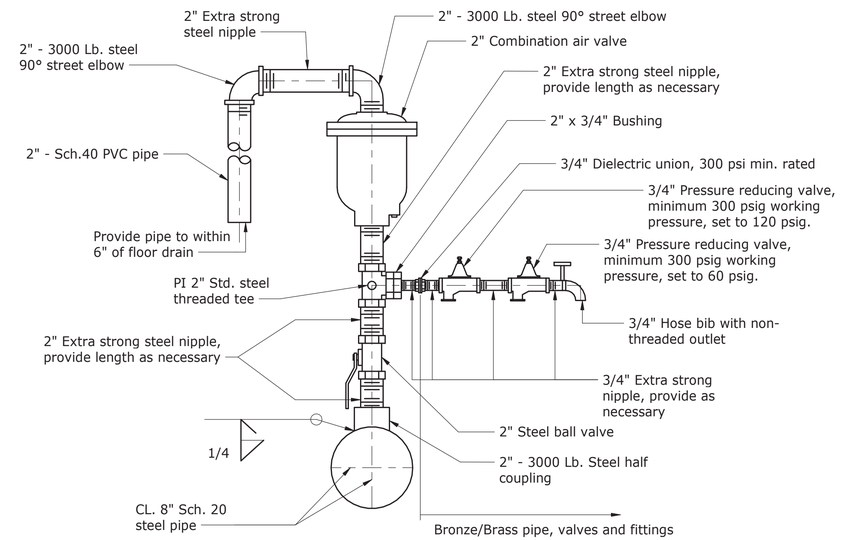

1 2-INCH AIR VALVE WITH SAMPLING PORT DETAIL
Scale: 1 1/2" = 1'-0"

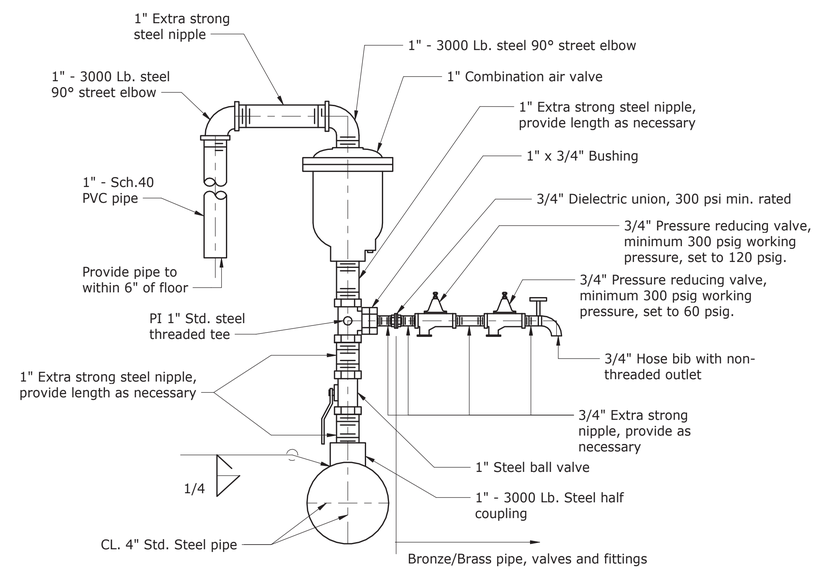

2 1-INCH AIR VALVE WITH SAMPLING PORT DETAIL
Scale: 1 1/2" = 1'-0"

NOTES

1. See Dwg. (60389) for General Notes

RECLAMATION
Managing Water in the West

ALWAYS THINK SAFETY

U.S. DEPARTMENT OF THE INTERIOR
BUREAU OF RECLAMATION
NAVAJO GALLUP WATER SUPPLY PROJECT
NEW MEXICO

SAN JUAN LATERAL
PUMPING PLANT NOS. 4 AND 7

K. Schlundt	DESIGNED
A. Young	DRAWN
Checker	CHECKED
K. Schlundt, P.E.	TECH. APPR.
Ryan Stephen, P.E. Admin Approver - Hydraulic Equipment Group	APPROVED
DENVER, CO	2020-01-24

TURNOUT BUILDINGS

PIPING AND VALVES SECTIONS AND DETAILS

1695-D-60393
Sheet 5

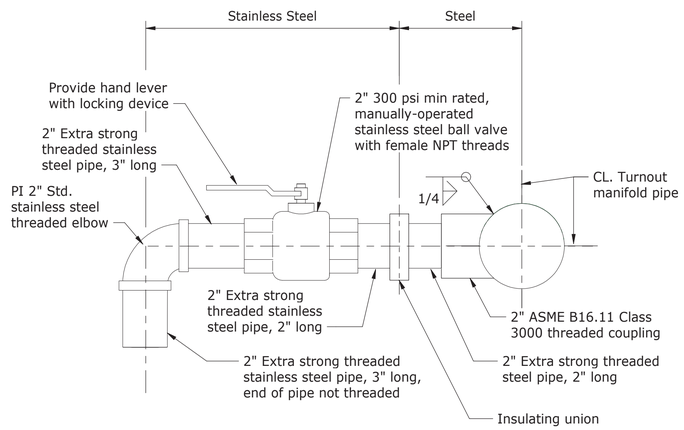

C 60389 CHECK VALVE DRAIN PORT ASSEMBLY SECTION
Scale: 3" = 1'-0"

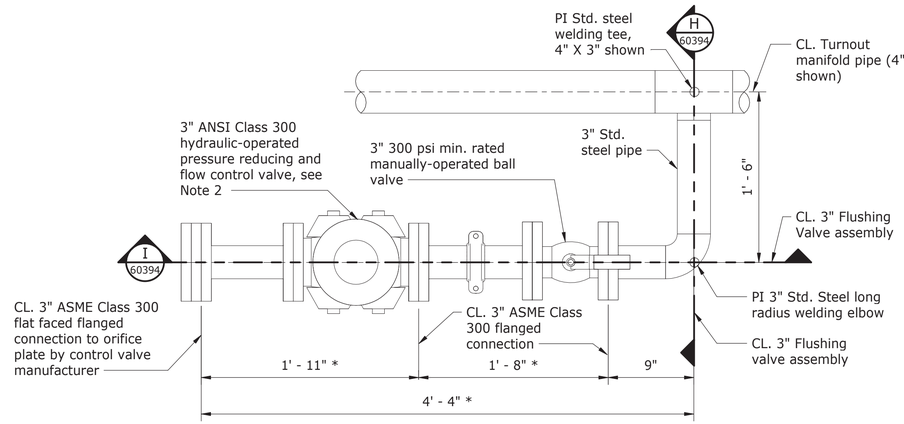

7 60389 FLUSHING VALVE ASSEMBLY DETAIL
Scale: 1 1/2" = 1'-0"

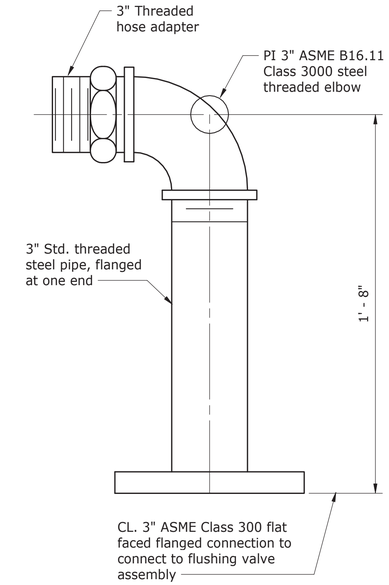

8 FLUSHING VALVE HOSE CONNECTION
Scale: 3" = 1'-0"

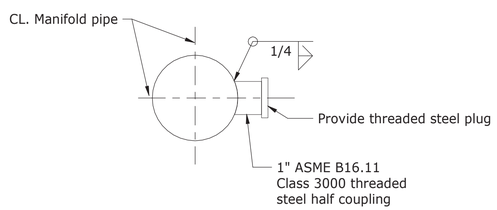

5 CHEMICAL INJECTION PORTS
Scale: 3" = 1'-0"

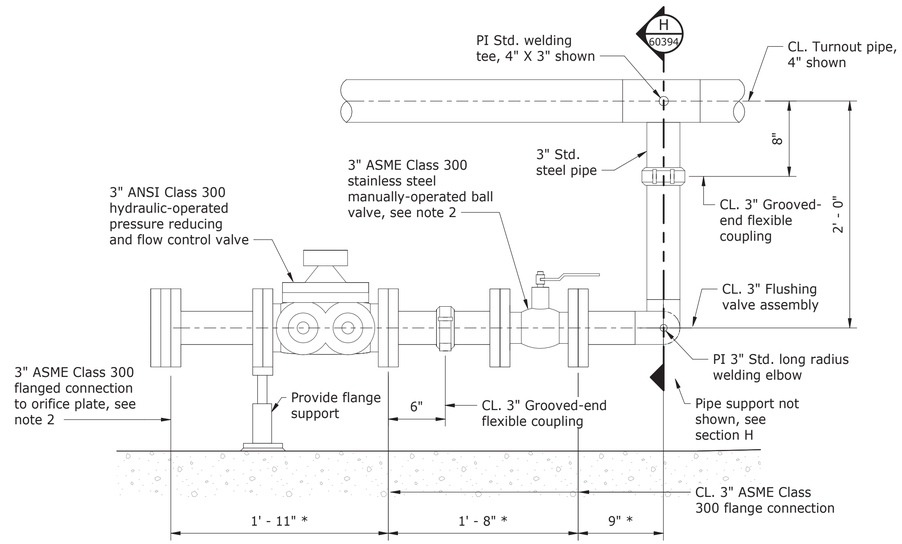

I 60390 FLUSHING VALVE ASSEMBLY
Scale: 1 1/2" = 1'-0"

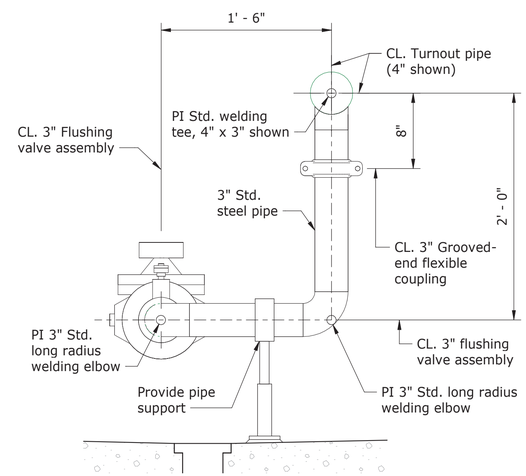

H 60394 FLUSHING VALVE ASSEMBLY SECTION
Scale: 1 1/2" = 1'-0"

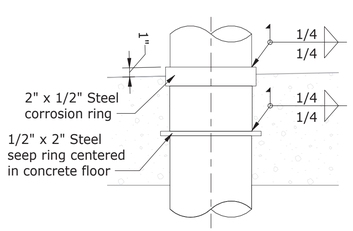

6 60390 CORROSION AND SEEP RING
Scale: 1 1/2" = 1'-0"

NOTES

1. See Dwg. (60389) for General Notes.
2. Locate and install flow control valve, orifice plate, and sensing line per flow control valve manufacturer's recommendations. It is understood that different control valve manufacturers have orifice plates in different locations. General layout is shown. Actual layout may vary.
3. One flushing valve hose connection piece is required. Store in location as directed by the COR.

RECLAMATION
Managing Water in the West

ALWAYS THINK SAFETY

U.S. DEPARTMENT OF THE INTERIOR
BUREAU OF RECLAMATION
NAVAJO GALLUP WATER SUPPLY PROJECT
NEW MEXICO
SAN JUAN LATERAL
PUMPING PLANT NOS. 4 AND 7

K. SCHLUNDT
DESIGNED
A. YOUNG
DRAWN
A. YOUNG
CHECKED
TECH. APPR. K. Schlundt, P.E.
APPROVED Ryan Stephen, P.E.
Admin Approver - Hydraulic Equipment Group
DENVER, CO 2020-01-24

TURNOUT BUILDINGS

PIPING AND VALVES DETAILS

1695-D-60394
Sheet 6

GENERAL NOTES

A. THE CONTRACTOR SHALL PROVIDE THE WORK SHOWN ON THE DRAWINGS AND AS SPECIFIED. THE WORD "WORK" SHALL MEAN ALL LABOR, TRANSPORTATION, MATERIAL, EQUIPMENT, TOOLS, INSTALLATION, SUPERVISION AND OTHER INCIDENTAL ITEMS OR SERVICES NECESSARY FOR PROPER INSTALLATION AND OPERATION OF THE COMPLETE SYSTEM, WHICH SHALL BE PROVIDED WHETHER OR NOT SPECIFICALLY INDICATED OR NOTED.
B. ALL WORK SHALL BE IN ACCORDANCE WITH THE LATEST ADOPTED EDITIONS OF THE APPLICABLE INTERNATIONAL BUILDING CODE (IBC), INTERNATIONAL MECHANICAL CODE (IMC), NATIONAL ELECTRIC CODES (NEC), AND APPLICABLE FEDERAL, STATE, AND LOCAL REGULATIONS.
C. THE CONTRACTOR SHALL BE RESPONSIBLE FOR PAYING ALL FEES AND OBTAINING ALL PERMITS AND INSPECTIONS REQUIRED FOR THE WORK.
D. CONTRACTOR IS TO PROVIDE COMPLETE CONNECTIONS TO ALL EQUIPMENT.
E. CONTRACTOR SHALL COORDINATE GENERAL WORK SCHEDULE WITH THE CONTRACTING OFFICER REPRESENTATIVE.
F. CONTRACTOR TO COORDINATE THE LOCATION OF ALL DUCTWORK, CEILING DEVICES, GRILLES, REGISTERS AND DIFFUSERS WITH REFLECTED CEILING PLAN AND STRUCTURE PRIOR TO BEGINNING WORK.
G. MECHANICAL DRAWINGS ARE DIAGRAMMATIC AND DO NOT NECESSARILY INDICATE EVERY REQUIRED OFFSET, FITTING, ETC. DRAWINGS ARE NOT TO BE SCALED FOR DIMENSIONS. TAKE ALL DIMENSIONS FROM ARCHITECTURAL DRAWINGS, CERTIFIED EQUIPMENT DRAWINGS AND FROM THE STRUCTURE ITSELF. BEFORE FABRICATING ANY WORK, VERIFY ALL SPACE REQUIREMENTS COORDINATING WITH OTHER TRADES, AND INSTALL THE SYSTEMS IN THE SPACE PROVIDED WITHOUT EXTRA COST TO THE GOVERNMENT.
H. ALL SUBSTITUTIONS SHALL BE SUBMITTED TO THE ENGINEER FOR APPROVAL. THE CONTRACTOR SHALL BE RESPONSIBLE FOR COORDINATING ALL REQUIREMENTS ASSOCIATED WITH SUBSTITUTED EQUIPMENT OR MATERIALS WITH OTHER BUILDING TRADES, INCLUDING ALL ELECTRICAL, STRUCTURAL, OR ARCHITECTURAL ELEMENTS. THE CONTRACTOR SHALL IDENTIFY AND ANNOTATE ALL REVISED REQUIREMENTS PER BUILDING TRADE ON THE SHOP DRAWINGS. THE CONTRACTOR SHALL ALSO IDENTIFY ALL COST DEBITS OR CREDITS IN WRITING FOR THE PROPOSED CHANGES PER BUILDING TRADE.
I. ALL EXTERIOR WALL AND ROOF PENETRATIONS SHALL BE SEALED WATERPROOF. SEE ARCHITECTURAL DETAILS.
J. XX-## REFERS TO EQUIPMENT DESIGNATION. SEE SPECIFICATIONS AND EQUIPMENT SCHEDULES FOR FURTHER INFORMATION IN REFERENCE TO THAT DESIGNATED PIECE OF EQUIPMENT.

PROJECT INFORMATION

APPROX. PROJECT LOCATION:	GALLUP, NM
APPROX. PROJECT ELEVATION:	5,900 FEET ABOVE SEA LEVEL
SUMMER DESIGN TEMPERATURE (ASHRAE 0.4%):	91 DEG F DRY BULB, 57.4 DEG F WET BULB
WINTER DESIGN TEMPERATURE (ASHRAE 99.6%):	0.6 DEG F DRY BULB

REFERENCE DRAWINGS

1. 1695-D-60370, PUMPING PLANT EXTERIOR ELEVATIONS
2. 1695-D-60386, CHEMICAL BUILDING CODE SUMMARY, LIFE SAFETY PLAN, FLOOR PLAN AND ROOF PLAN
3. 1695-D-60387, CHEMICAL BUILDING ARCHITECTURAL, EXTERIOR ELEVATIONS
4. 1695-D-60440, EQUIPMENT FOUNDATION AND ENCLOSURE, HVAC UNITS

HVAC DRAWINGS

1. 1695-D-60493, HVAC COVER SHEET
2. 1695-D-60494, HVAC SCHEDULES
3. 1695-D-60495, HVAC PUMPING PLANT PLAN
4. 1695-D-60496, HVAC PUMPING PLANT SECTIONS
5. 1695-D-60497, HVAC PUMPING PLANT NO 4: CHEMICAL BUILDING AND VAULT- PLAN AND SECTIONS
6. 1695-D-60498, HVAC TURNOUT BUILDING PLAN
7. 1695-D-60499, HVAC SEQUENCE OF OPERATIONS
8. 1695-D-60500, HVAC DETAILS

ABBREVIATIONS AND SYMBOLS

AFF	ABOVE FINISHED FLOOR	IN W.C.	INCHES WATER COLUMN
AFG	ABOVE FINISHED GRADE	KW	KILOWATT
AI	ANALOG INPUT	LAT	LEAVING AIR TEMPERATURE
AO	ANALOG OUTPUT	LBS OR #	POUNDS
BAS	BUILDING AUTOMATION SYSTEM	MAX	MAXIMUM
BHP	BRAKE HORSEPOWER	MBH	THOUSAND BTUH
BI	BINARY INPUT	MCA	MINIMUM CIRCUIT AMPS
BO	BINARY OUTPUT	MIN	MINIMUM
BOD	BASIS OF DESIGN	N/A	NOT APPLICABLE
BTU	BRITISH THERMAL UNIT	N.C.	NORMALLY CLOSED
BTUH	BTU PER HOUR	N.O.	NORMALLY OPEN
CFM	CUBIC FEET PER MINUTE	NO OR #	NUMBER
DB	DRY BULB	NTS	NOT TO SCALE
DEG OR °	DEGREE	OA	OUTSIDE AIR
DIA	DIAMETER	OP	OPERATING
DN	DOWN	%	PERCENT
EA	EXHAUST	PH	PHASE (ELECTRICAL)
EAT	ENTERING AIR TEMP.	PRV	PRESSURE REDUCING VALVE
EFF	EFFICIENCY	RA	RETURN AIR
EG	EXHAUST GRILLE	RPM	ROTATIONS PER MINUTE
ESP	EXTERNAL STATIC PRESSURE	SA	SUPPLY AIR
ERV	ENERGY RECOVERY VENTILATOR	SD	SUPPLY DIFFUSER
F	FAHRENHEIT	SL	STATIONARY LOUVER
FLA	FULL LOAD AMPS	TEMP	TEMPERATURE
FPM	FEET PER MINUTE	THRU	THROUGH
FT	FOOT, FEET, FEET WATER COLUMN	TSTAT	THERMOSTAT
GPM	GALLONS PER MINUTE	TYP	TYPICAL
HD	HEAD	V	VOLT
HP	HORSEPOWER	WT	WEIGHT
IN	INCHES		

	FLOW		TEMPERATURE CONTROL DAMPER (T.C.)
	CONTROL WIRING		GAUGE
BO - XXX	BINARY OUTPUT POINT	DA	DAMPER ACTUATOR
BI - XXX	BINARY INPUT POINT	T	REMOTE BULB SENSOR/CONTROLLER
AO - XXX	ANALOG OUTPUT POINT		
AI - XXX	ANALOG INPUT POINT	T	ROOM THERMOSTAT/SENSOR
S	WALL SWITCH	DP	DIFFERENTIAL PRESSURE SENSOR
CT	CURRENT TRANSFORMER	T	DUCT AVERAGING TEMPERATURE SENSOR
	FAN	SD	SMOKE DETECTOR
	FILTER	L	INDICATING LIGHT
ELEC / C	COIL		2 POSITION 3-WAY & 2-WAY CONTROL VALVES
	MOTOR STARTER		STATIONARY LOUVER
AF	AIRFLOW SENSOR		FIRE/SMOKE DAMPER

RECLAMATION
Managing Water in the West

ALWAYS THINK **SAFETY**

U.S. DEPARTMENT OF THE INTERIOR
BUREAU OF RECLAMATION
NAVAJO GALLUP WATER SUPPLY PROJECT
NEW MEXICO
SAN JUAN LATERAL
PUMPING PLANT NOS. 4 AND 7

M. DIUBALDO
DESIGNED
M. DIUBALDO
DRAWN
R. JANKOWSKI
CHECKED
TECH. APPR. M. DIUBALDO, P.E.
APPROVED Patrick Dawson
Peer Reviewer - Mechanical Equipment Group

DENVER, CO 2020-01-24

HVAC

COVER SHEET

1695-D-60493

RECLAMATION
Managing Water in the West

ROOF TOP UNIT SCHEDULE

MARK	GENERAL DATA: BOD MANUFACTURER MODEL	LOCATION	SERVICE	SUPPLY AIR (CFM)	MIN. OUTSIDE AIR (CFM)	SUPPLY FAN DATA: TSP (W/DIRTY FILTERS) (IN)	FAN TYPE	MOTOR DATA: RPM	HP	V/PH/HZ	COOLING COIL: TOTAL MBH	SENSIBLE MBH	EAT (DB)	EAT (WB)	LAT (DB)	OPER. WT. LBS	HEATING COIL: TYPE	KW	CONTROLS	NOTES
RTU-1	CARRIER / 50A4B035	EXTERIOR PAD MOUNTED	PUMPING PLANT BAY	13,000	5,000	3	FC	1228	15	480/3/60	390	390	91.3	57	55	5327	Electric	36	PROVIDE DDC CONTROL SYSTEM PER SPECIFICATIONS	
RTU-2	CARRIER / 50A4B035	EXTERIOR PAD MOUNTED	PUMPING PLANT BAY	13,000	5,000	3	FC	1228	15	480/3/60	390	390	91.3	57	55	5327	Electric	36	PROVIDE DDC CONTROL SYSTEM PER SPECIFICATIONS	

UNIT HEATER SCHEDULE

MARK	GENERAL DATA: SERVICE	BOD MANUFACTURER / MODEL	LOCATION	CFM	HEATING KW	MOTOR DATA: V/PH/HZ	FLA	OPER. WT. LBS	CONTROLS	NOTES
UH-1	PUMPING PLANT	TPI CORP / P3PUH07CA1	AIR CHAMBER	575	7.5	480/3/60	9.1	44	PROVIDE LOCAL THERMOSTAT CONTROL.	MOUNT 9-FT AFF PER MANUFACTURER'S RECOMMENDATIONS.
UH-2	PUMPING PLANT	TPI CORP / P3PUH07CA1	AIR CHAMBER	575	7.5	480/3/60	9.1	44	PROVIDE LOCAL THERMOSTAT CONTROL.	MOUNT 9-FT AFF PER MANUFACTURER'S RECOMMENDATIONS.
UH-3	PUMPING PLANT	TPI CORP / P3PUH07CA1	AIR CHAMBER	575	7.5	480/3/60	9.1	44	PROVIDE LOCAL THERMOSTAT CONTROL.	MOUNT 9-FT AFF PER MANUFACTURER'S RECOMMENDATIONS.
UH-4	CHEMICAL BUILDING (PP4 ONLY)	TPI CORP / P3PUH10CA1	CHEMICAL BUILDING	575	10	480/3/60	12.1	51	PROVIDE LOCAL THERMOSTAT CONTROL.	MOUNT 9-FT AFF PER MANUFACTURER'S RECOMMENDATIONS.
UH-5	CHEMICAL BUILDING (PP4 ONLY)	TPI CORP / P3PUH10CA1	CHEMICAL BUILDING	575	10	480/3/60	12.1	51	PROVIDE LOCAL THERMOSTAT CONTROL.	MOUNT 9-FT AFF PER MANUFACTURER'S RECOMMENDATIONS.
UH-6	CHEMICAL BUILDING (PP4 ONLY)	TPI CORP / P3PUH10CA1	CHEMICAL BUILDING	575	10	480/3/60	12.1	51	PROVIDE LOCAL THERMOSTAT CONTROL.	MOUNT 9-FT AFF PER MANUFACTURER'S RECOMMENDATIONS.
UH-7	CHEMICAL BUILDING (PP4 ONLY)	TPI CORP / P3PUH10CA1	CHEMICAL BUILDING	575	10	480/3/60	12.1	51	PROVIDE LOCAL THERMOSTAT CONTROL.	MOUNT 9-FT AFF PER MANUFACTURER'S RECOMMENDATIONS.
UH-8	UTILITY VAULT (PP4 ONLY)	TPI CORP / P3PUH03CA1	UTILITY VAULT	400	3.3	480/3/60	4	36	PROVIDE LOCAL THERMOSTAT CONTROL.	MOUNT NEAR ROOF OF VAULT AND PER MANUFACTURER'S RECOMMENDATIONS.

FAN SCHEDULE

MARK	GENERAL DATA: SERVICE	BOD MANUFACTURER MODEL	LOCATION	CFM	ESP (IN)	RPM	MOTOR DATA: HP	System - Voltage	PHASE	OPER. WT. LBS	CONTROLS	NOTES
VF-1	CHEMICAL BUILDING (PP4 ONLY)	COOK / 120ACRUD	CHEMICAL BUILDING	900	0.125	1075	0.17	120	1	67	RUNS CONTINUOUSLY.	MOUNT ON MANUFACTURER PROVIDED ROOF CURB. INCLUDE MANUFACTURER PROVIDED BACKDRAFT DAMPER.

PACKAGED TERMINAL AIR CONDITIONER SCHEDULE

MARK	GENERAL DATA: SERVICE	BOD MANUFACTURER MODEL	LOCATION	SUPPLY FAN MOTOR DATA: HP	V/PH/HZ	MCA	COOLING COIL: TOTAL BTU/HR	HEATING COIL: TYPE	KW	OPER. WT. LBS	CONTROLS	NOTES
PTAC-1	PUMPING PLANT	AMANA / PTH073G15A	CONTROL ROOM	N/A	208/1/60	8.5	7,600	ELECTRIC	1.3	108	PROVIDE LOCAL THERMOSTAT CONTROL.	MOUNT USING MANUFACTURER PROVIDED WALL SLEEVE. ROUTE CONDENSATE DRAINAGE OUTSIDE.
PTAC-2	CHEMICAL BUILDING (PP4 ONLY)	BARD / W17A2-A0S	WEST WALL	1/5	230/1/60	16	16,400	NONE	0	305	PROVIDE LEAD/LAG CONTROLLER FOR PTAC-2 AND -3	MOUNT USING MANUFACTURER PROVIDED WALL SLEEVE. ROUTE CONDENSATE DRAINAGE OUTSIDE.
PTAC-3	CHEMICAL BUILDING (PP4 ONLY)	BARD / W17A2-A0S	WEST WALL	1/5	230/1/60	16	16,400	NONE	0	305	PROVIDE LEAD/LAG CONTROLLER FOR PTAC-2 AND -3	MOUNT USING MANUFACTURER PROVIDED WALL SLEEVE. ROUTE CONDENSATE DRAINAGE OUTSIDE.
PTAC-4	TURNOUT BUILDING	AMANA / PTH153G50A	SOUTH WALL	N/A	240/1/60	27.6	14,700	ELECTRIC	4.1	126	PROVIDE LOCAL THERMOSTAT CONTROL	MOUNT USING MANUFACTURER PROVIDED WALL SLEEVE. ROUTE CONDENSATE DRAINAGE OUTSIDE.

STATIONARY LOUVER SCHEDULE

MARK	SERVICE	BOD MANUFACTURER MODEL	CFM	S.P. LOSS (IN-WG)	FACE VELOCITY (FPM)	MINIMUM FREE AREA (WXH)	FACE SIZE	NOTES
SL-1	PUMPING PLANT	RUSKIN / ELF375DX	3250	0.09	720	54%	36"x36"	PROVIDES BUILDING PRESSURE RELIEF. INCLUDE BACKDRAFT DAMPER.
SL-2	PUMPING PLANT	RUSKIN / ELF375DX	3250	0.09	720	54%	36"x36"	PROVIDES BUILDING PRESSURE RELIEF. INCLUDE BACKDRAFT DAMPER.
SL-3	PUMPING PLANT	RUSKIN / ELF375DX	3250	0.09	720	54%	36"x36"	PROVIDES BUILDING PRESSURE RELIEF. INCLUDE BACKDRAFT DAMPER.
SL-4	PUMPING PLANT	RUSKIN / ELF375DX	3250	0.09	720	54%	36"x36"	PROVIDES BUILDING PRESSURE RELIEF. INCLUDE BACKDRAFT DAMPER.
SL-5	CHEMICAL BUILDING (PP4 ONLY)	RUSKIN / ELF375DX	215	0.01	222	54%	16"x16"	
SL-6	CHEMICAL BUILDING (PP4 ONLY)	RUSKIN / ELF375DX	215	0.01	222	54%	16"x16"	
SL-7	CHEMICAL BUILDING (PP4 ONLY)	RUSKIN / ELF375DX	215	0.01	222	54%	16"x16"	
SL-8	CHEMICAL BUILDING (PP4 ONLY)	RUSKIN / ELF375DX	215	0.01	222	54%	16"x16"	

GRILLES, REGISTERS, & DIFFUSERS SCHEDULE

MARK	SERVICE	BOD MANUFACTURER MODEL	TYPE	FACE SIZE	MATERIAL	FLOW	NOTES
RG-1	PUMPING PLANT	KRUEGER / AFS585	RETURN GRILLE	98"x13"	ALUMINUM	8000 CFM	RETURN AIR FOR RTU-1, 1/2" SPACING. USE TWO GRILLES TO ACHEIVE OVERALL LENGTH NEEDED.
RG-2	PUMPING PLANT	KRUEGER / AFS585	RETURN GRILLE	13"x98"	ALUMINUM	8000 CFM	RETURN AIR FOR RTU-2, 1/2" SPACING. USE TWO GRILLES TO ACHEIVE OVERALL LENGTH NEEDED.
RG-3	CHEMICAL BUILDING (PP4 ONLY)	KRUEGER / AFS580	RETURN GRILLE	20"x12"	ALUMINUM	600 CFM	ASSOCIATED WITH PTAC-2, FIXED BLADE, 3/4" SPACING
RG-4	CHEMICAL BUILDING (PP4 ONLY)	KRUEGER / AFS580	RETURN GRILLE	20"x12"	ALUMINUM	600 CFM	ASSOCIATED WITH PTAC-3, FIXED BLADE, 3/4" SPACING
SG-1	PUMPING PLANT	KRUEGER / AF5680	SUPPLY GRILLE	42"x18"	ALUMINUM	6500 CFM	SUPPLY AIR FOR RTU-1, HORIZONTAL BLADES, 3" SPACING, SINGLE DEFLECTION
SG-2	PUMPING PLANT	KRUEGER / AF5680	SUPPLY GRILLE	42"x18"	ALUMINUM	6500 CFM	SUPPLY AIR FOR RTU-1, HORIZONTAL BLADES, 3" SPACING, SINGLE DEFLECTION
SG-3	PUMPING PLANT	KRUEGER / AF5680	SUPPLY GRILLE	42"x18"	ALUMINUM	6500 CFM	SUPPLY AIR FOR RTU-2, HORIZONTAL BLADES, 3" SPACING, SINGLE DEFLECTION
SG-4	PUMPING PLANT	KRUEGER / AF5680	SUPPLY GRILLE	42"x18"	ALUMINUM	6500 CFM	SUPPLY AIR FOR RTU-2, HORIZONTAL BLADES, 3" SPACING, SINGLE DEFLECTION
SG-5	CHEMICAL BUILDING (PP4 ONLY)	KRUEGER / AF580	SUPPLY GRILLE	16"x16"	ALUMINUM	215 CFM	ASSOCIATED WITH SL-5, HORIZONTAL BLADES, 3/4' SPACING, SINGLE DEFLECTION
SG-6	CHEMICAL BUILDING (PP4 ONLY)	KRUEGER / AF580	SUPPLY GRILLE	16"x16"	ALUMINUM	215 CFM	ASSOCIATED WITH SL-6, HORIZONTAL BLADES, 3/4' SPACING, SINGLE DEFLECTION
SG-7	CHEMICAL BUILDING (PP4 ONLY)	KRUEGER / AF580	SUPPLY GRILLE	16"x16"	ALUMINUM	215 CFM	ASSOCIATED WITH SL-7, HORIZONTAL BLADES, 3/4' SPACING, SINGLE DEFLECTION
SG-8	CHEMICAL BUILDING (PP4 ONLY)	KRUEGER / AF580	SUPPLY GRILLE	16"x16"	ALUMINUM	215 CFM	ASSOCIATED WITH SL-8, HORIZONTAL BLADES, 3/4' SPACING, SINGLE DEFLECTION
SG-9	CHEMICAL BUILDING (PP4 ONLY)	KRUEGER / AF580	SUPPLY GRILLE	20"x8"	ALUMINUM	600 CFM	ASSOCIATED WITH PTAC-2, HORIZONTAL BLADES, 3/4' SPACING, SINGLE DEFLECTION
SG-10	CHEMICAL BUILDING (PP4 ONLY)	KRUEGER / AF580	SUPPLY GRILLE	20"x8"	ALUMINUM	600 CFM	ASSOCIATED WITH PTAC-3, HORIZONTAL BLADES, 3/4' SPACING, SINGLE DEFLECTION

GENERAL NOTES:

A. DRAWING APPLIES TO PUMPING PLANT 4 AND 7.
B. EQUIPMENT SIZE AND LOCATION SUBJECT TO CHANGE BASED ON APPROVED EQUIPMENT.
C. SEE DRAWING 60493 FOR SYMBOLS, ABBREVIATIONS AND REFERENCE DRAWINGS.
D. SEE DRAWING 60500 FOR DETAILS.
E. REFERENCE ELECTRICAL DRAWINGS FOR HVAC CONDUIT AND WIRING LOCATIONS.

ALWAYS THINK **SAFETY**

U.S. DEPARTMENT OF THE INTERIOR
BUREAU OF RECLAMATION
NAVAJO GALLUP WATER SUPPLY PROJECT
NEW MEXICO
SAN JUAN LATERAL
PUMPING PLANT NOS. 4 AND 7

M. DIUBADLO
DESIGNED
M. DIUBALDO
DRAWN
R. JANKOWSKI
CHECKED
TECH. APPR. M. DIUBALDO, P.E.
APPROVED Patrick Dawson
Peer Reviewer - Mechanical Equipment Group

DENVER, CO 2020-01-24

HVAC

SCHEDULES

1695-D-60494

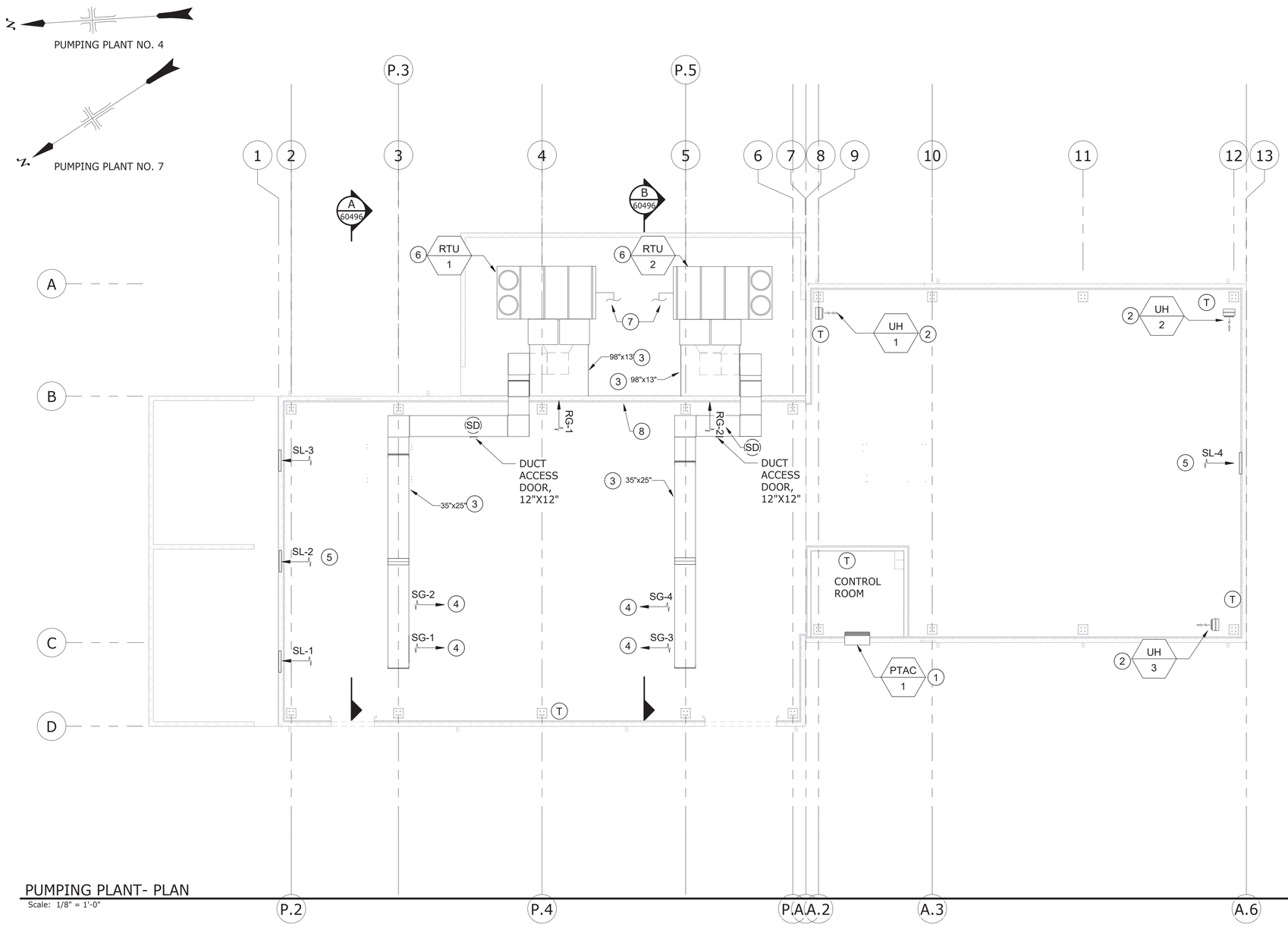

PUMPING PLANT- PLAN

Scale: 1/8" = 1'-0"

GENERAL NOTES:

A. DRAWING APPLIES TO PUMPING PLANT 4 AND 7.
B. EQUIPMENT SIZE AND LOCATION SUBJECT TO CHANGE BASED ON APPROVED EQUIPMENT.
C. SEE DRAWING 60493 FOR SYMBOLS, ABBREVIATIONS AND REFERENCE DRAWINGS.
D. SEE DRAWING 60500 FOR DETAILS.
E. REFERENCE ELECTRICAL DRAWINGS FOR HVAC CONDUIT AND WIRING LOCATIONS.

FLAG NOTES: (#)

1. PTAC-# FLUSH MOUNT PTAC WITH EXTERIOR WALL. LOCATE PER MANUFACTURER'S RECOMMENDATIONS. ROUTE 1" COPPER CONDENSATE PIPE TO EXTERIOR OF BUILDING. COORDINATE ROUTING WITH COR.
2. UH-# WALL MOUNTED UNIT HEATERS. PROVIDE WITH WALL MOUNTED THERMOSTATS. SUPPORT HEATERS FROM STRUCTURAL MEMBERS. USING MANUFACTURER'S MOUNTING EQUIPMENT, MOUNT ALL HEATERS APPROXIMATELY 9-FT AFF.
3. DIMENSIONS LISTED ARE INSIDE DIMENSIONS. PROVIDE DUCT LINER OR DOUBLE WALL DUCT PER SPECIFICATIONS. COORDINATE DUCT ROUTING AND PENETRATIONS WITH ALL OTHER TRADES. SUPPLY AIR PENETRATION TO BE ABOVE CMU PORTION OF WALL. ROUTING IS DEPENDENT ON APPROVED EQUIPMENT.
4. SG-# SUPPLY GRILL. ADJUST BLADES SO AIR IS DIRECTED TOWARDS PUMP MOTORS.
5. SL-# SEE 60370, ARCHITECTURAL EXTERIOR ELEVATIONS FOR DETAILS. INSTALL BIRD SCREEN ON BACKSIDE OF LOUVER.
6. RTU-# PAD MOUNTED ROOF TOP UNIT. PROVIDE MINIMUM CLEARANCES PER MANUFACTURER RECOMMENDATIONS ON ALL SIDES. PROVIDE FLEXIBLE COUPLING AT DUCT CONNECTIONS. SEE 60440 FOR PAD DETAILS.
7. ROUTE 1 1/4" COPPER CONDENSATE PIPE TO DRAIN ON CONCRETE PAD AS SHOWN ON DRAWING 60489. ROUTE IN SUCH A MANNER AS TO LIMIT TRIPPING HAZARD. COORDINATE ROUTING WITH COR.
8. APPROXIMATE LOCATION FOR CONTROL SYSTEM FOR RTU-1 AND RTU-2. REFERENCE SPECIFICATIONS AND SEQUENCE OF OPERATION DRAWING FOR DETAILS.

0 4' 8' 16'
Scale: 1/8" = 1'-0"

RECLAMATION
Managing Water in the West

ALWAYS THINK **SAFETY**

U.S. DEPARTMENT OF THE INTERIOR
BUREAU OF RECLAMATION
NAVAJO GALLUP WATER SUPPLY PROJECT
NEW MEXICO

SAN JUAN LATERAL
PUMPING PLANT NOS. 4 AND 7

M. DIUBALDO	
DESIGNED	
M. DIUBALDO	
DRAWN	
R. JANKOWSKI	
CHECKED	
TECH. APPR.	M. DIUBALDO, P.E.
APPROVED	Patrick Dawson
Peer Reviewer - Mechanical Equipment Group	
DENVER, CO	2020-01-24

HVAC

PUMPING PLANT - PLAN

1695-D-60495

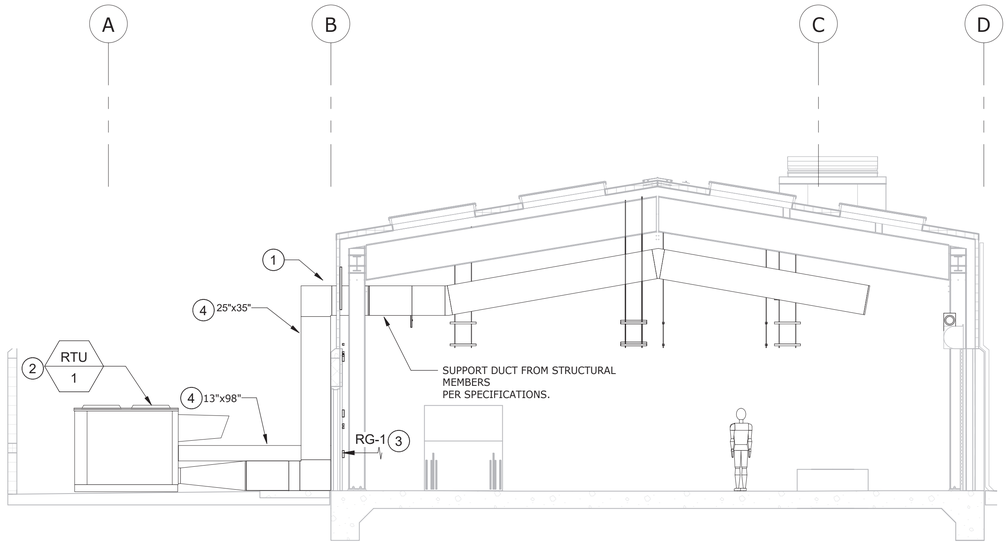

A 60495 SECTION
Scale: 3/16" = 1'-0"

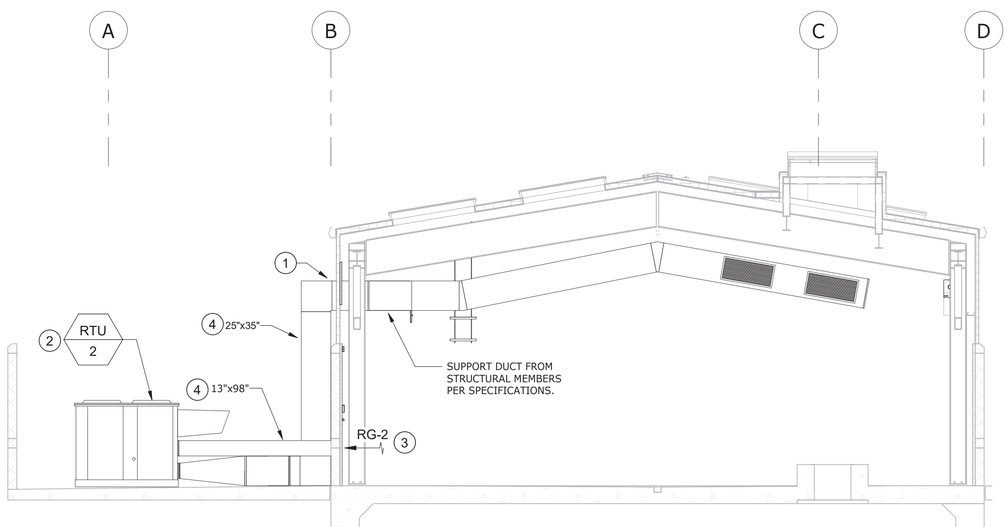

B 60495 SECTION
Scale: 3/16" = 1'-0"

GENERAL NOTES:

A. DRAWING APPLIES TO PUMPING PLANT 4 AND 7.
B. EQUIPMENT SIZE AND LOCATION SUBJECT TO CHANGE BASED ON APPROVED EQUIPMENT.
C. SEE DRAWING 60493 FOR SYMBOLS, ABBREVIATIONS AND REFERENCE DRAWINGS.
D. SEE DRAWING 60500 FOR DETAILS.
E. REFERENCE ELECTRICAL DRAWINGS FOR HVAC CONDUIT AND WIRING LOCATIONS.

FLAG NOTES: (#)

1. PENETRATE WALL ABOVE CMU PORTION FOR DUCT.
2. RTU-# PAD MOUNTED ROOF TOP UNIT. PROVIDE MINIMUM CLEARANCES PER MANUFACTURER RECOMMENDATIONS ON ALL SIDES. PROVIDE FLEXIBLE COUPLING AT DUCT CONNECTIONS.
3. RG-# COORDINATE LOCATION WITH APPROVED EQUIPMENT.
4. DIMENSIONS LISTED ARE INSIDE DIMENSIONS. PROVIDE DUCT LINER OR DOUBLE WALL DUCT PER SPECIFICATIONS. COORDINATE DUCT ROUTING AND PENETRATIONS WITH ALL OTHER TRADES. ROUTING IS DEPENDENT ON APPROVED EQUIPMENT.

0 5' 10'
Scale: 3/16" = 1'-0"

RECLAMATION
Managing Water in the West

ALWAYS THINK SAFETY

U.S. DEPARTMENT OF THE INTERIOR
BUREAU OF RECLAMATION
NAVAJO GALLUP WATER SUPPLY PROJECT
NEW MEXICO
SAN JUAN LATERAL
PUMPING PLANT NOS. 4 AND 7

M. DIUBALDO
DESIGNED
M. DIUBALDO
DRAWN
R. JANKOWSKI
CHECKED
TECH. APPR. M. DIUBALDO, P.E.
APPROVED Patrick Dawson
Peer Reviewer - Mechanical Equipment Group
DENVER, CO 2020-01-24

HVAC

PUMPING PLANT-SECTIONS

1695-D-60496

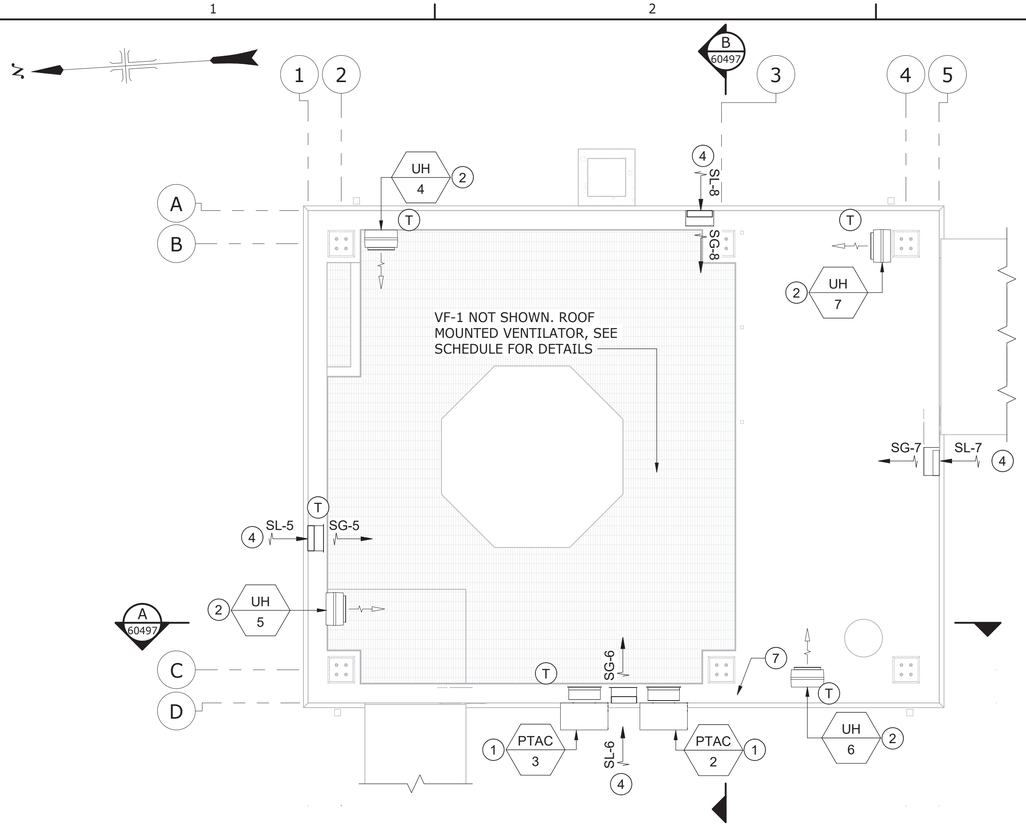

CHEMICAL BUILDING - PLAN

Scale: 1/4" = 1'-0"

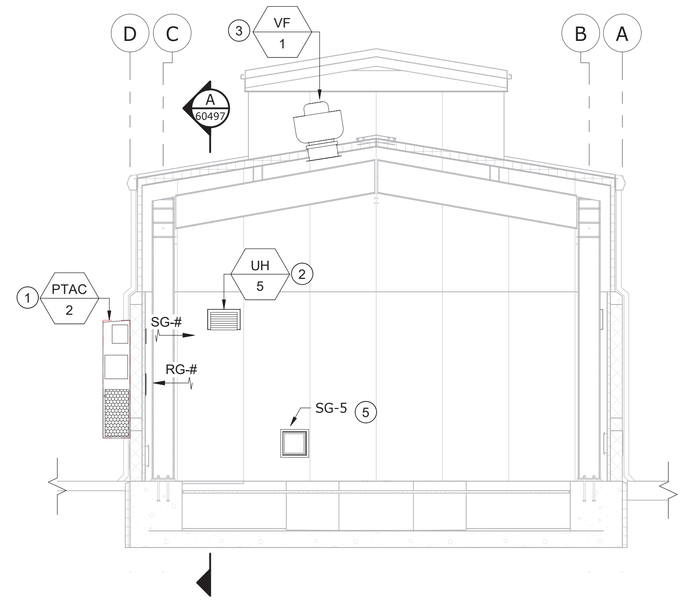

B SECTION

Scale: 1/4" = 1'-0"

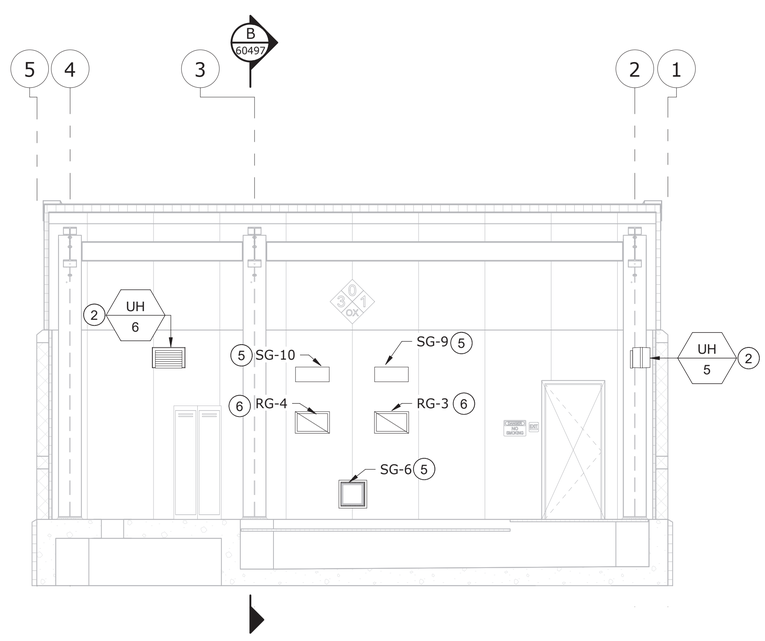

A SECTION

Scale: 1/4" = 1'-0"

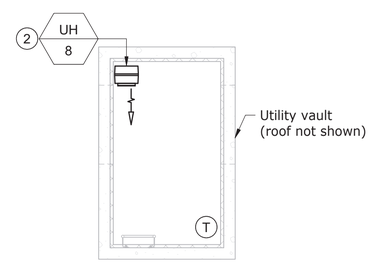

UTILITY VAULT - PLAN

Scale: 1/4" = 1'-0"

GENERAL NOTES:

A. DRAWING APPLIES TO PUMPING PLANT 4 AND 7.
B. EQUIPMENT SIZE AND LOCATION SUBJECT TO CHANGE BASED ON APPROVED EQUIPMENT.
C. SEE DRAWING 60493 FOR SYMBOLS, ABBREVIATIONS AND REFERENCE DRAWINGS.
D. SEE DRAWING 60500 FOR DETAILS.
E. REFERENCE ELECTRICAL DRAWINGS FOR HVAC CONDUIT AND WIRING LOCATIONS.

FLAG NOTES:

1. PTAC-# PACKAGED TERMINAL AIR CONDITIONING WITH REMOTE WALL-MOUNTED THERMOSTAT. INSTALL UNIT WITH PROPER CLEARANCES AS RECOMMENDED BY MANUFACTURER IN THE CMU PORTION OF THE WALL.
2. UH-# ELECTRIC UNIT HEATER. PROVIDE WITH WALL MOUNTED THERMOSTATS. SUPPORT HEATERS FROM STRUCTURAL MEMBERS USING MANUFACTURER'S MOUNTING EQUIPMENT. MOUNT APPROXIMATELY 9 FT AFF OR AS APPROVED BY COR.
3. VF-# VENTILATION FAN. COORDINATE LOCATION WITH DRAWING 60386.
4. SL-# SEE 60387, ARCHITECTURAL EXTERIOR ELEVATIONS FOR DETAILS. INSTALL BIRD SCREEN ON BACKSIDE OF LOUVER.
5. SG-# COORDINATE LOCATION WITH STATIONARY LOUVER OR APPROVED EQUIPMENT.
6. RG-# COORDINATE LOCATION WITH APPROVED EQUIPMENT.
7. APPROXIMATE LOCATION FOR MANUFACTURER PROVIDED LEAD/LAG CONTROLLER FOR PTAC-2 AND PTAC-3.

0 2' 4' 8'
Scale: 1/4" = 1'-0"

RECLAMATION
Managing Water in the West

ALWAYS THINK SAFETY

U.S. DEPARTMENT OF THE INTERIOR
BUREAU OF RECLAMATION
NAVAJO GALLUP WATER SUPPLY PROJECT
NEW MEXICO

SAN JUAN LATERAL
PUMPING PLANT NOS. 4 AND 7

DESIGNED	M. DIUBALDO
DRAWN	M. DIUBALDO
CHECKED	R. JANKOWSKI
TECH. APPR.	M. DIUBALDO, P.E.
APPROVED	Patrick Dawson Peer Reviewer – Mechanical Equipment Group
DENVER, CO	2020-01-24

HVAC

PUMPING PLANT NO. 4: CHEMICAL BUILDING AND VAULT- PLAN AND SECTIONS

1695-D-60497

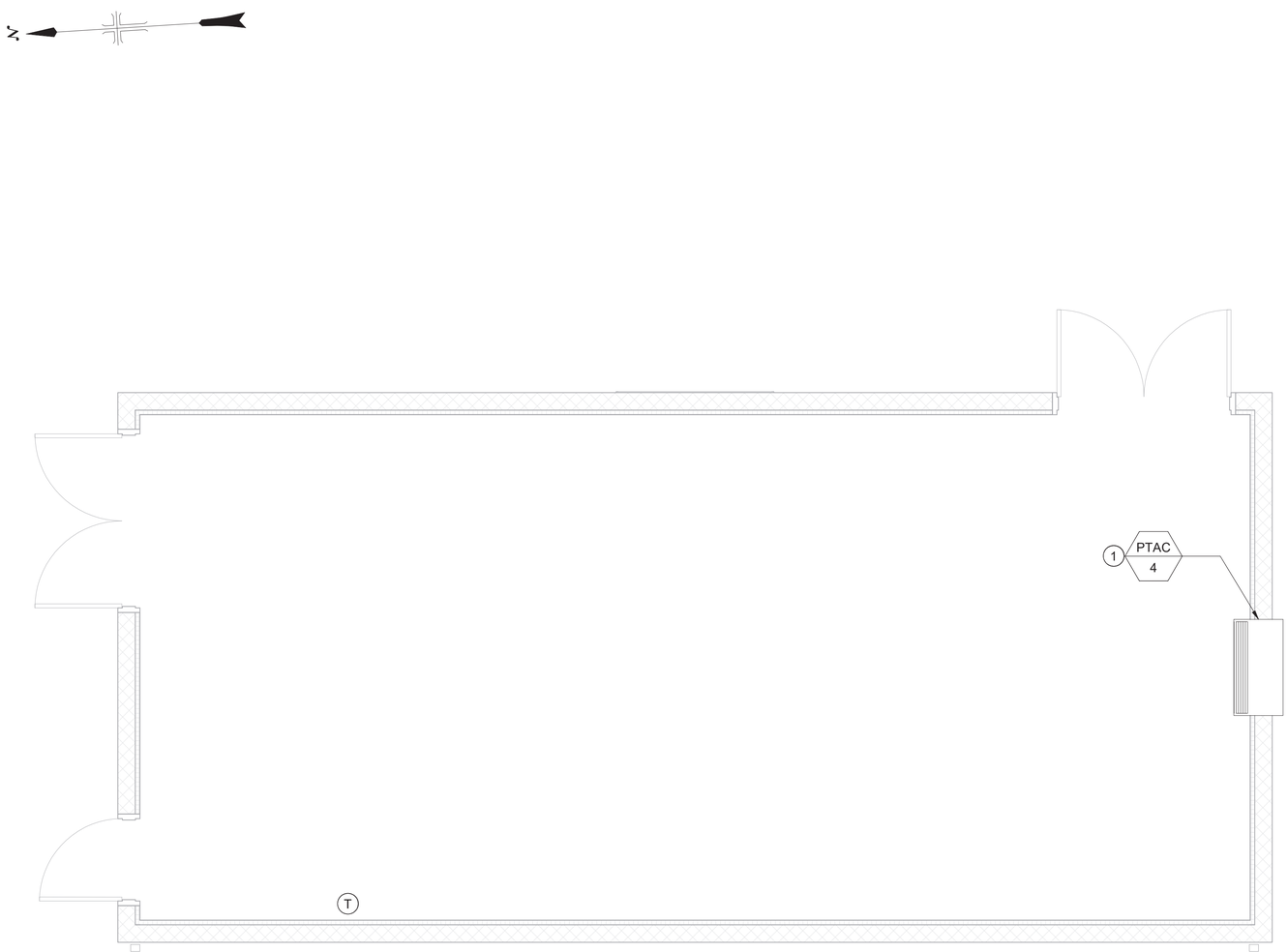

HVAC - PLAN

Scale: 3/8" = 1'-0"

GENERAL NOTES:

A. DRAWING APPLIES TO PUMPING PLANT 4.
B. EQUIPMENT SIZE AND LOCATION SUBJECT TO CHANGE BASED ON APPROVED EQUIPMENT.
C. SEE DRAWING 60493 FOR SYMBOLS, ABBREVIATIONS AND REFERENCE DRAWINGS.
D. SEE DRAWING 60500 FOR DETAILS.
E. REFERENCE ELECTRICAL DRAWINGS FOR HVAC CONDUIT AND WIRING LOCATIONS.

FLAG NOTES: (#)

1. PTAC-# FLUSH MOUNT PTAC WITH EXTERIOR WALL. LOCATE PER MANUFACTURER'S RECOMMENDATIONS. ROUTE 1" COPPER CONDENSATE DRAIN PIPE TO EXTERIOR OF BUILDING. COORDINATE ROUTING WITH COR.

0 2' 4' 6'

RECLAMATION
Managing Water in the West

ALWAYS THINK **SAFETY**

U.S. DEPARTMENT OF THE INTERIOR
BUREAU OF RECLAMATION
NAVAJO GALLUP WATER SUPPLY PROJECT
NEW MEXICO

SAN JUAN LATERAL
PUMPING PLANT NOS. 4 AND 7

M. DIUBALDO
DESIGNED
M. DIUBALDO
DRAWN
R. JANKOWSKI
CHECKED
TECH. APPR. Meghan Diubaldo, P.E.
APPROVED Patrick Dawson, P.E.
Peer Reviewer - Supervisor, Mechanical Equipment Group

DENVER, CO 2020-01-24

TURNOUT BUILDING

HVAC PLAN

1695-D-60498

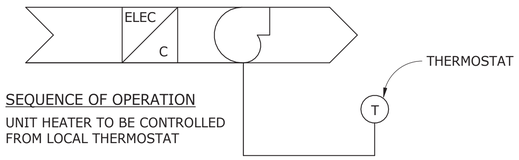

SEQUENCE OF OPERATION

UNIT HEATER TO BE CONTROLLED FROM LOCAL THERMOSTAT

1 UNIT HEATER SEQUENCE AND SCHEMATIC, UH-*

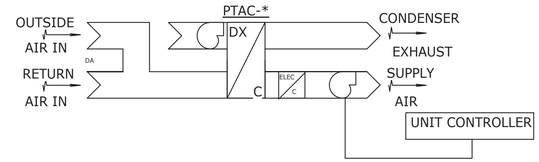

SEQUENCE OF OPERATION

THE UNIT SHALL BE CONTROLLED BY ITS OWN LOCAL THERMOSTAT.

COOLING SET POINT TO BE SET AT 80 DEG F. HEATING SET POINT TO BE SET AT 60 DEG F.

2 PACKAGED TERMINAL AIR CONDITIONER SEQUENCE AND SCHEMATIC, PTAC-1 AND -4

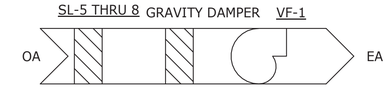

SEQUENCE OF OPERATION

FAN TO RUN CONTINUOUSLY

3 ROOF MOUNTED VENTILATION FAN, VF-1

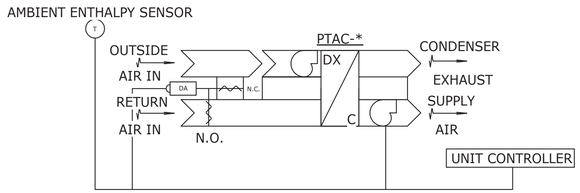

SEQUENCE OF OPERATION

LEAD/LAG OPERATION:
MANUFACTURER SHALL SUPPLY A LEAD/LAG CONTROLLER. THE TWO PTACS SHALL OPERATE IN A LEAD/LAG FASHION.
- THE LEAD PTAC SHALL RUN FIRST.
- ON FAILURE OF THE LEAD PTAC, THE LAG PTAC SHALL RUN AND THE LEAD PTAC SHALL TURN OFF.
- IF THE SPACE SETPOINT HAS NOT BEEN REACHED WITHIN 20 MINUTES (ADJ.), THE LAG PTAC SHALL STAGE ON AND RUN IN UNISON WITH THE LEAD PTAC TO MAINTAIN SPACE TEMPERATURE SETPOINT.

THE DESIGNATED LEAD PTAC SHALL ROTATE UPON ONE OF THE FOLLOWING CONDITIONS (USER SELECTABLE):
- MANUALLY THROUGH A SOFTWARE SWITCH
- IF PUMP RUNTIME (ADJ.) IS EXCEEDED
- DAILY
- WEEKLY
- MONTHLY

RUN CONDITIONS - SCHEDULED:
THE UNITS SHALL RUN TO MAINTAIN:
- A 80°F (ADJ.) COOLING SETPOINT

ECONOMIZER:
THE CONTROLLER SHALL MEASURE THE ZONE TEMPERATURE AND MODULATE THE MIXED AIR DAMPERS IN SEQUENCE TO MAINTAIN A SETPOINT 2°F LESS THAN THE ZONE COOLING SETPOINT.

THE ECONOMIZER SHALL BE ENABLED WHENEVER:
- OUTSIDE AIR TEMPERATURE IS LESS THAN 90°F (ADJ.).
- AND THE OUTSIDE AIR TEMPERATURE IS LESS THAN THE RETURN AIR TEMPERATURE.
- AND THE SUPPLY FAN STATUS IS ON.

THE ECONOMIZER SHALL CLOSE WHENEVER:
- MIXED AIR TEMPERATURE DROPS FROM 45°F TO 40°F (ADJ.).
- OR ON LOSS OF SUPPLY FAN STATUS.

THE OUTSIDE AIR DAMPER SHALL CLOSE AND THE RETURN AIR DAMPER SHALL OPEN WHEN THE UNIT IS OFF.

4 PACKAGED TERMINAL AIR CONDITIONER SEQUENCE AND SCHEMATIC, PTAC-2, -3

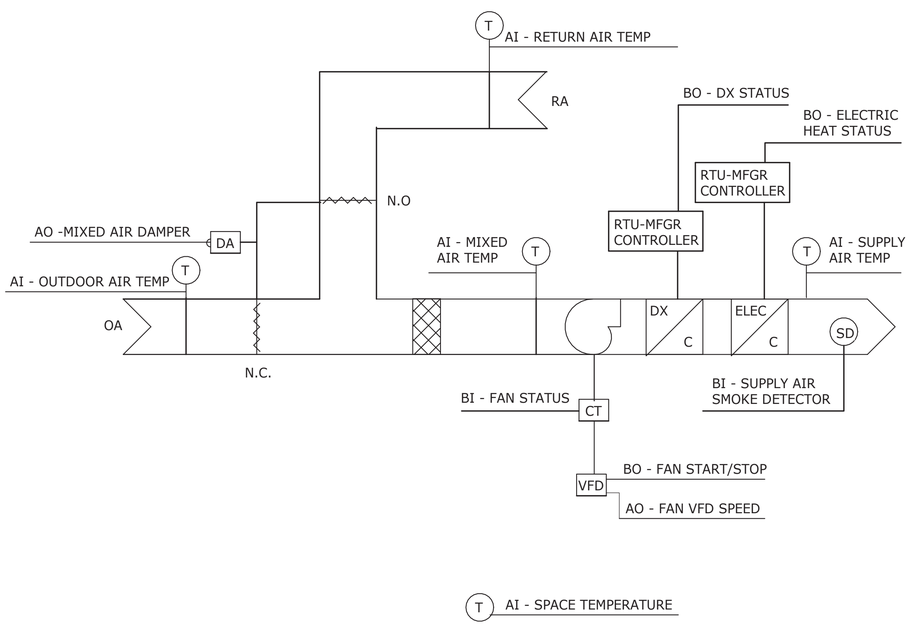

SEQUENCE OF OPERATION

LEAD/LAG OPERATION:
THE TWO RTUS SHALL OPERATE IN A LEAD/LAG FASHION.
- THE LEAD RTU SHALL RUN FIRST.
- ON FAILURE OF THE LEAD RTU, THE LAG RTU SHALL RUN AND THE LEAD RTU SHALL TURN OFF.
- IF THE SPACE SETPOINT HAS NOT BEEN REACHED WITHIN 20 MINUTES (ADJ.), THE LAG RTU SHALL STAGE ON AND RUN IN UNISON WITH THE LEAD RTU TO MAINTAIN SPACE TEMPERATURE SETPOINT.

THE DESIGNATED LEAD RTU SHALL ROTATE UPON ONE OF THE FOLLOWING CONDITIONS (USER SELECTABLE):
- MANUALLY THROUGH A SOFTWARE SWITCH
- IF PUMP RUNTIME (ADJ.) IS EXCEEDED
- DAILY
- WEEKLY
- MONTHLY

RUN CONDITIONS - SCHEDULED:
THE UNITS SHALL RUN TO MAINTAIN:
- A 95°F (ADJ.) COOLING SETPOINT
- A 45°F (ADJ.) HEATING SETPOINT.

ALARMS SHALL BE PROVIDED AS FOLLOWS:
- HIGH SPACE TEMP: IF THE ZONE TEMPERATURE IS GREATER THAN THE COOLING SETPOINT BY A USER DEFINABLE AMOUNT (ADJ.).
- LOW SPACE TEMP: IF THE ZONE TEMPERATURE IS LESS THAN THE HEATING SETPOINT BY A USER DEFINABLE AMOUNT (ADJ.).

SPACE SETPOINT ADJUST:
THE OCCUPANT SHALL BE ABLE TO ADJUST THE ZONE TEMPERATURE HEATING AND COOLING SETPOINTS AT THE ZONE SENSOR.

SPACE UNOCCUPIED OVERRIDE:
A TIMED LOCAL OVERRIDE CONTROL SHALL ALLOW AN OCCUPANT TO OVERRIDE THE SCHEDULE AND PLACE THE UNIT INTO AN OCCUPIED MODE FOR AN ADJUSTABLE PERIOD OF TIME. AT THE EXPIRATION OF THIS TIME, CONTROL OF THE UNIT SHALL AUTOMATICALLY RETURN TO THE SCHEDULE.

SUPPLY AIR SMOKE DETECTION:
THE UNIT SHALL SHUT DOWN AND GENERATE AN ALARM UPON RECEIVING A SUPPLY AIR SMOKE DETECTOR STATUS. ALARM TO BE RELAYED BOTH TO THE FIRE ALARM AND HVAC CONTROL SYSTEM.

SUPPLY FAN:
MODULATE THE SUPPLY FAN VFD SPEED TO MAINTAIN ZONE TEMPERATURE SETPOINT. THE FAN SPEED TO INCREASE AS THE SPACE TEMP RISES ABOVE COOLING SETPOINT, OR AS THE SPACE TEMP DROPS BELOW HEATING SETPOINT. THE SUPPLY FAN VFD SPEED SHALL NOT DROP BELOW 30% (ADJ.). ALARMS SHALL BE PROVIDED AS FOLLOWS:
- SUPPLY FAN FAILURE: COMMANDED ON, BUT THE STATUS IS OFF.
- SUPPLY FAN IN HAND: COMMANDED OFF, BUT THE STATUS IS ON.

COOLING STAGES:
THE COOLING SHALL BE MODULATED BY THE RTU MANUFACTURER PROVIDED CONTROLLER. CONTROLLER SHALL MEASURE THE ZONE TEMPERATURE AND STAGE THE COOLING TO MAINTAIN ITS COOLING SETPOINT. TO PREVENT SHORT CYCLING, THERE SHALL BE A USER DEFINABLE (ADJ.) DELAY BETWEEN STAGES, AND EACH STAGE SHALL HAVE A USER DEFINABLE (ADJ.) MINIMUM RUNTIME.
THE COOLING SHALL BE ENABLED WHENEVER:
- OUTSIDE AIR TEMPERATURE IS GREATER THAN 60°F (ADJ.).
- AND THE ECONOMIZER IS DISABLED.
- AND THE ZONE TEMPERATURE IS ABOVE COOLING SETPOINT.
- AND THE SUPPLY FAN STATUS IS ON.
- AND THE HEATING IS NOT ACTIVE.

ELECTRIC HEATING STAGES:
THE HEATING SHALL BE MODULATED BY THE RTU MANUFACTURER PROVIDED CONTROLLER THE CONTROLLER SHALL MEASURE THE ZONE TEMPERATURE AND STAGE THE HEATING TO MAINTAIN ITS HEATING SETPOINT. TO PREVENT SHORT CYCLING, THERE SHALL BE A USER DEFINABLE (ADJ.) DELAY BETWEEN STAGES, AND EACH STAGE SHALL HAVE A USER DEFINABLE (ADJ.) MINIMUM RUNTIME.
THE HEATING SHALL BE ENABLED WHENEVER:
- OUTSIDE AIR TEMPERATURE IS LESS THAN 45°F (ADJ.).
- AND THE ZONE TEMPERATURE IS BELOW HEATING SETPOINT.
- AND THE SUPPLY FAN STATUS IS ON.
- AND THE COOLING IS NOT ACTIVE.

ECONOMIZER:
NOTE: ONLY ONE UNIT MAY OPERATED IN ECONOMIZER MODE AT ANY GIVEN TIME.
THE CONTROLLER SHALL MEASURE THE ZONE TEMPERATURE AND MODULATE THE MIXED AIR DAMPERS IN SEQUENCE TO MAINTAIN A SETPOINT 2°F LESS THAN THE ZONE COOLING SETPOINT. THE OUTSIDE AIR DAMPERS SHALL MAINTAIN A MINIMUM ADJUSTABLE POSITION OF 20% (ADJ.) OPEN WHENEVER OCCUPIED.
THE ECONOMIZER SHALL BE ENABLED WHENEVER:
- OUTSIDE AIR TEMPERATURE IS LESS THAN 90°F (ADJ.).
- AND THE OUTSIDE AIR TEMPERATURE IS LESS THAN THE RETURN AIR TEMPERATURE.
- AND THE SUPPLY FAN STATUS IS ON.

THE ECONOMIZER SHALL CLOSE WHENEVER:
- MIXED AIR TEMPERATURE DROPS FROM 45°F TO 40°F (ADJ.).
- OR ON LOSS OF SUPPLY FAN STATUS.

THE OUTSIDE AIR DAMPER SHALL CLOSE AND THE RETURN AIR DAMPER SHALL OPEN WHEN THE UNIT IS OFF.

MINIMUM OUTSIDE AIR VENTILATION - FIXED PERCENTAGE:
THE OUTSIDE AIR DAMPERS SHALL MAINTAIN A MINIMUM POSITION (ADJ.) DURING BUILDING OCCUPIED HOURS AND BE CLOSED DURING UNOCCUPIED HOURS. MINIMUM POSITION IS TO CORRESPOND WITH THE EQUIPMENT SCHEDULE.

MIXED AIR TEMPERATURE:
THE CONTROLLER SHALL MONITOR THE MIXED AIR TEMPERATURE AND USE AS REQUIRED FOR ECONOMIZER CONTROL
ALARMS SHALL BE PROVIDED AS FOLLOWS:
- HIGH MIXED AIR TEMP: IF THE MIXED AIR TEMPERATURE IS GREATER THAN 100° F (ADJ.).
- LOW MIXED AIR TEMP: IF THE MIXED AIR TEMPERATURE IS LESS THAN 35° F (ADJ.).

RETURN AIR TEMPERATURE:
THE CONTROLLER SHALL MONITOR THE RETURN AIR TEMPERATURE AND USE AS REQUIRED FOR ECONOMIZER CONTROL
ALARMS SHALL BE PROVIDED AS FOLLOWS:
- HIGH RETURN AIR TEMP: IF THE RETURN AIR TEMPERATURE IS GREATER THAN 100°F (ADJ.).
- LOW RETURN AIR TEMP: IF THE RETURN AIR TEMPERATURE IS LESS THAN 35° F (ADJ.).

SUPPLY AIR TEMPERATURE:
THE CONTROLLER SHALL MONITOR THE SUPPLY AIR TEMPERATURE.
ALARMS SHALL BE PROVIDED AS FOLLOWS:
- HIGH SUPPLY AIR TEMP: IF THE SUPPLY AIR TEMPERATURE IS GREATER THAN 120°F (ADJ.).
- LOW SUPPLY AIR TEMP: IF THE SUPPLY AIR TEMPERATURE IS LESS THAN 45° F (ADJ.).

5 ROOF TOP UNIT SEQUENCE AND SCHEMATIC, RTU-1 AND -2

RECLAMATION
Managing Water in the West

ALWAYS THINK SAFETY

U.S. DEPARTMENT OF THE INTERIOR
BUREAU OF RECLAMATION
NAVAJO GALLUP WATER SUPPLY PROJECT
NEW MEXICO
SAN JUAN LATERAL
PUMPING PLANT NOS. 4 AND 7

DESIGNED	M. DIUBALDO
DRAWN	M. DIUBALDO
CHECKED	R. JANKOWSKI
TECH. APPR.	M. DIUBALDO, P.E.
APPROVED (Peer Reviewer - Mechanical Equipment Group)	Patrick Dawson
DENVER, CO	2020-01-24

HVAC

SEQUENCE OF OPERATIONS

1695-D-60499

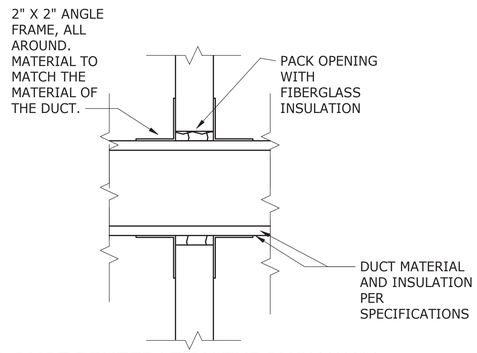

1 DUCT PENETRATION THROUGH WALL

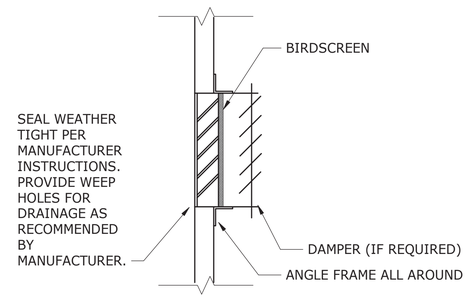

2 LOUVER

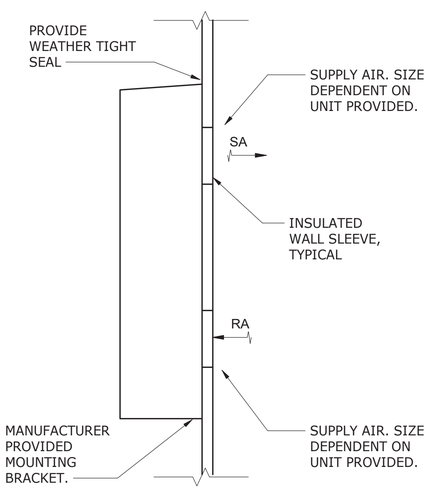

3 EXTERIOR WALL MOUNTED PTAC-2 AND -3

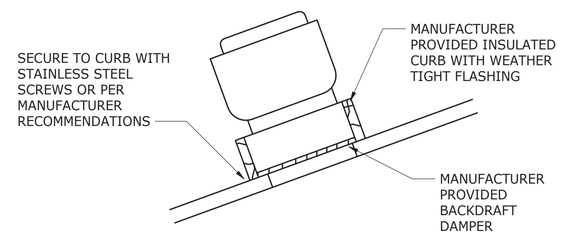

4 ROOF MOUNTED VENTILATION FAN

GENERAL NOTES:

A. DRAWING APPLIES TO PUMPING PLANT 4 AND 7.
B. EQUIPMENT SIZE AND LOCATION SUBJECT TO CHANGE BASED ON APPROVED EQUIPMENT.
C. SEE DRAWING 60493 FOR SYMBOLS, ABBREVIATIONS AND REFERENCE DRAWINGS.
D. REFERENCE ELECTRICAL DRAWINGS FOR HVAC CONDUIT AND WIRING LOCATIONS.

RECLAMATION
Managing Water in the West

ALWAYS THINK **SAFETY**

U.S. DEPARTMENT OF THE INTERIOR
BUREAU OF RECLAMATION
NAVAJO GALLUP WATER SUPPLY PROJECT
NEW MEXICO
SAN JUAN LATERAL
PUMPING PLANT NOS. 4 AND 7

M. DIUBALDO
DESIGNED
M. DIUBALDO
DRAWN
R. JANKOWSKI
CHECKED
TECH. APPR. M. DIUBALDO, P.E.
APPROVED Patrick Dawson
Peer Reviewer - Mechanical Equipment Group

DENVER, CO 2020-01-24

HVAC

DETAILS

1695-D-60500

General Notes

A. Mount mechanical equipment per Standard Drawing 40-D-5599.
B. Equipment pads shall be a minimum of 4-in thick.
C. Configuration of piping systems and diameter of piping connections may change depending on approved equipment.
D. All drainage piping is 4-in unless otherwise noted.
E. For all valves, fittings, unions, joints and flanges, manufacturer's recommended working pressure must not be less than design pressure.
F. Insulating type joints shall be provided at connections between piping of dissimilar metals or where required for connections to electrical equipment.

Reference Drawings

1. 1695-D-60510, P&ID Pumping Plant No. 4: Discharge Header
2. 1695-D-60514, P&ID Pumping Plant No. 4: Emergency Shower Supply
3. 1695-D-60597, Pumping Plant No. 4 Steel Manifold Plan and Sections
4. 1695-D-60598, Pumping Plant No. 4 Steel Manifold Sections
5. 1695-D-60436, PrecastConcrete Manholes Plan and Sections
6. 40-D-5599, Small Equipment Foundations

Abbreviations and Symbols

ASME	AMERICAN SOCIETY OF MECHANICAL ENGINEERS
ASTM	AMERICAN SOCIETY OF TESTING MATERIALS
AWWA	AMERICAN WATER WORKS ASSOCIATION
CW	COOLING WATER
DW	DOMESTIC WATER
FD	FLOOR DRAIN
FW	FIRE WATER
MSS	MANUFACTURERS STANDARDS SOCIETY OF THE VALVES AND FITTINGS INDUSTRY
WOG	WATER OIL OR GAS
IN	INCH
FT	FOOT

TANKLESS WATER HEATER

CHANGE IN PIPE DIAMETER

BALL VALVE

CHECK VALVE

PIPE BREAK

WYE-STRAINER

DOUBLE CHECK VALVE BACKFLOW PREVENTION ASSEMBLY

TEMPERATURE INDICATOR

PRESSURE GAUGE

PRESSURE SWITCH

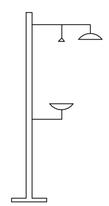
SAFETY SHOWER

RECLAMATION
Managing Water in the West

ALWAYS THINK **SAFETY**

U.S. DEPARTMENT OF THE INTERIOR
BUREAU OF RECLAMATION
NAVAJO GALLUP WATER SUPPLY PROJECT
NEW MEXICO
SAN JUAN LATERAL
PUMPING PLANT NOS. 4 AND 7

M. DIUBALDO
DESIGNED
M. DIUBALDO
DRAWN
E. MORLEY
CHECKED
TECH. APPR. M. DIUBALDO, P.E.
APPROVED Patrick Dawson
Peer Reviewer - Mechanical Equipment Group

DENVER, CO 2020-01-24

PLUMBING

COVER SHEET

1695-D-60485

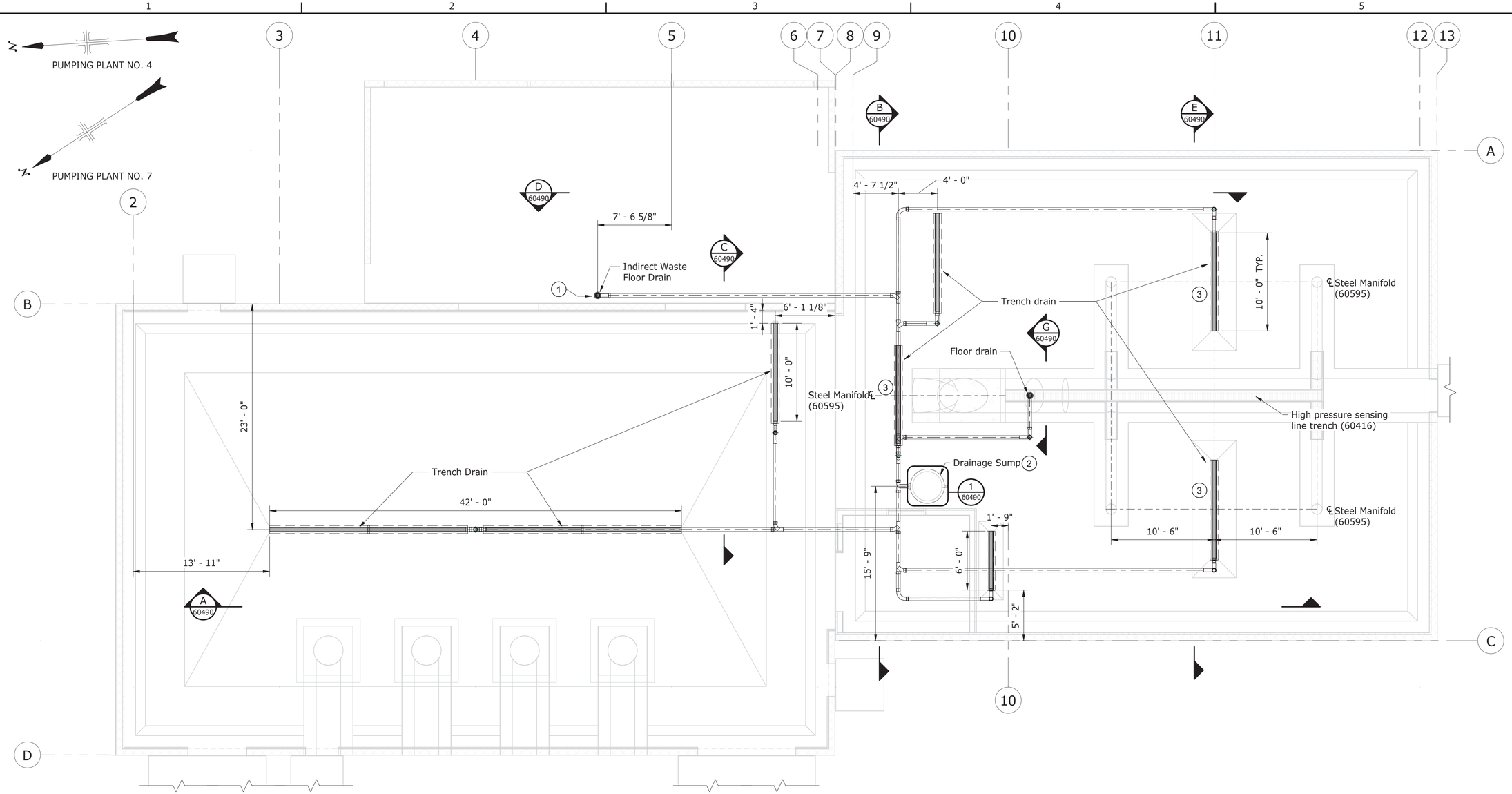

GRAVITY DRAINAGE - PLAN

Scale: 3/16" = 1'-0"

GENERAL NOTES

A. See Drawing 60485 for Symbols, Abbreviations and Reference Drawings.
B. Contractor shall provide complete connection between drains and drainage pipes
C. All floor penetrations shall be waterproof.
D. All Drainage pipe shall be 4 inches in diameter unless otherwise noted
E. All Drainage pipe shall be sloped, in the direction of flow, a minimum of 1/4 inch per linear foot of pipe.
F. Horizontal pipe penetrations through foundation are not allowed, drainage pipe shall be buried below foundation expansion joint.

FLAG NOTES (#)

1. Contractor to field route condensate drain pipes to area floor drain.
2. Contractor to pipe sump discharge to approved location and coordinate piping with COR.
3. Trench centerline and mid-point should be centered between steel manifold (60595).

0 5' 10'
Scale: 3/16" = 1'-0"

RECLAMATION
Managing Water in the West

ALWAYS THINK SAFETY

U.S. DEPARTMENT OF THE INTERIOR
BUREAU OF RECLAMATION
NAVAJO GALLUP WATER SUPPLY PROJECT
NEW MEXICO

SAN JUAN LATERAL
PUMPING PLANT NOS. 4 AND 7

E. MORLEY
DESIGNED
E. MORLEY
DRAWN
M. DIUBALDO
CHECKED
TECH. APPR. E. MORLEY, P.E.
APPROVED Patrick Dawson
Peer Reviewer - Mechanical Equipment Group

DENVER, CO 2020-01-24

PLUMBING

GRAVITY DRAINAGE PLAN

1695-D-60489

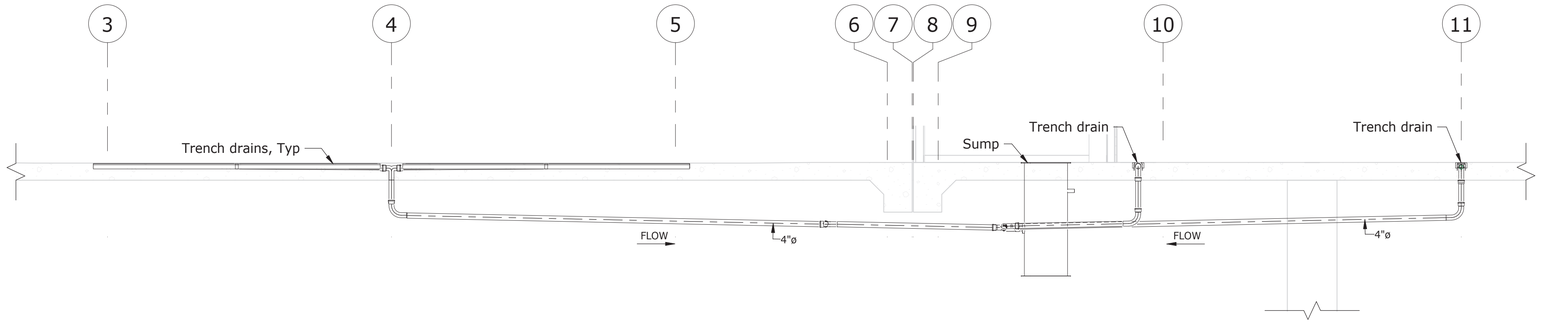

A 60489 SECTION
Scale: 3/16" = 1'-0"

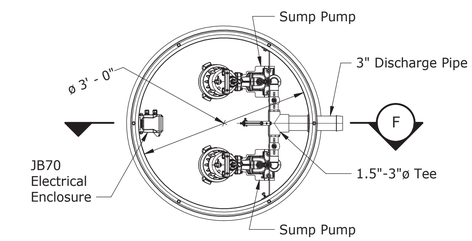

1 60489 DETAIL
Scale: 3/4" = 1'-0"

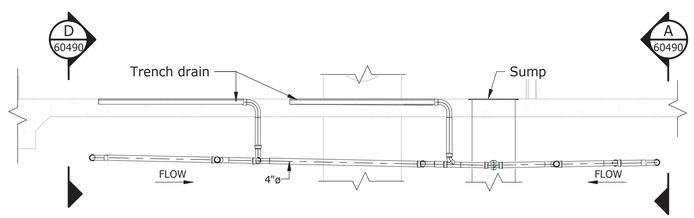

B 60489 SECTION
Scale: 3/16" = 1'-0"

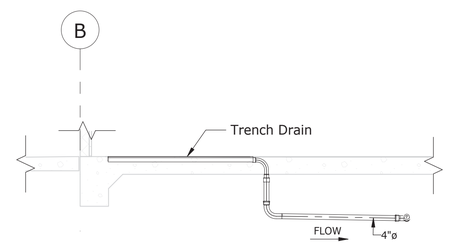

C 60489 SECTION C
Scale: 3/16" = 1'-0"

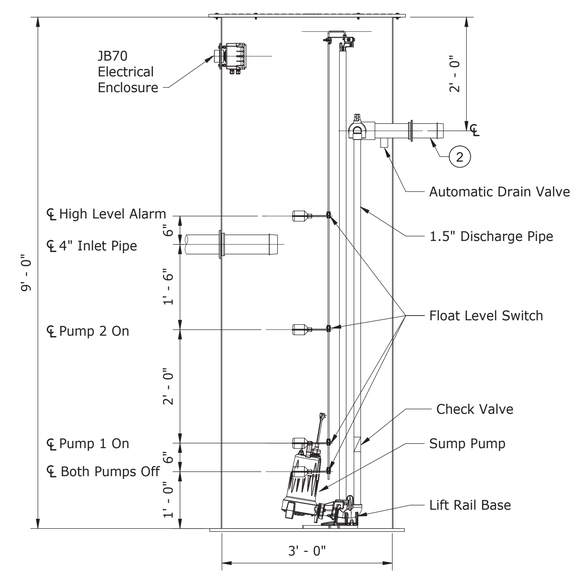

F 60490 SECTION
Scale: 3/4" = 1'-0"

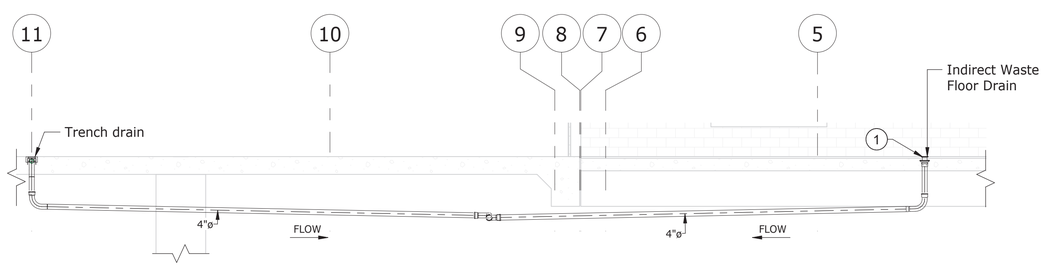

D 60489 SECTION
Scale: 3/16" = 1'-0"

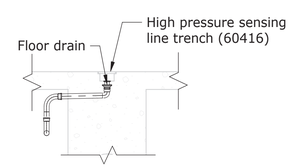

G 60489 SECTION
Scale: 3/16" = 1'-0"

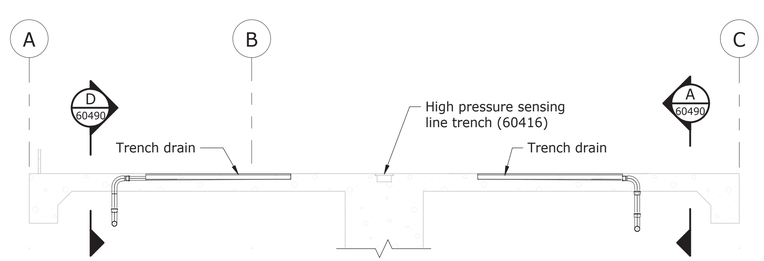

E 60489 SECTION
Scale: 3/16" = 1'-0"

GENERAL NOTES:

A. See Drawing 60485 for Symbols, Abbreviations and Reference Drawings.
B. Drainage pipe shall be sloped, in the direction of flow, a minimum of 1/4 inch per linear foot of pipe.
C. Contractor shall provide complete connection between drains and drainage pipes.
D. All floor penetrations shall be waterproof.
E. All Drainage pipe shall be 4 inches in diameter unless otherwise noted.
F. Horizontal pipe penetrations through foundation are not allowed, drainage pipe shall be buried below foundation expansion joint.

FLAG NOTES: (#)

1. Contractor to field route condensate drain pipes to area floor drain.
2. See Drawing 60502 for continuation

0 5' 10'
Scale: 3/16" = 1'-0"

0 1' 2' 3'
Scale: 3/4" = 1'-0"

RECLAMATION
Managing Water in the West

ALWAYS THINK **SAFETY**

U.S. DEPARTMENT OF THE INTERIOR
BUREAU OF RECLAMATION
NAVAJO GALLUP WATER SUPPLY PROJECT
NEW MEXICO

SAN JUAN LATERAL
PUMPING PLANT NOS. 4 AND 7

E. MORLEY	
DESIGNED	
E. MORLEY	
DRAWN	
M. DIUBALDO	
CHECKED	
TECH. APPR.	E. MORLEY, P.E.
APPROVED Peer Reviewer - Mechanical Equipment Group	Patrick Dawson
DENVER, CO	2020-01-24

PLUMBING

GRAVITY DRAINAGE - SECTION AND DETAILS

1695-D-60490

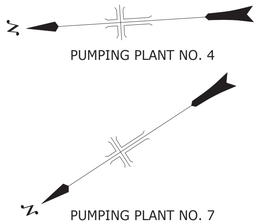

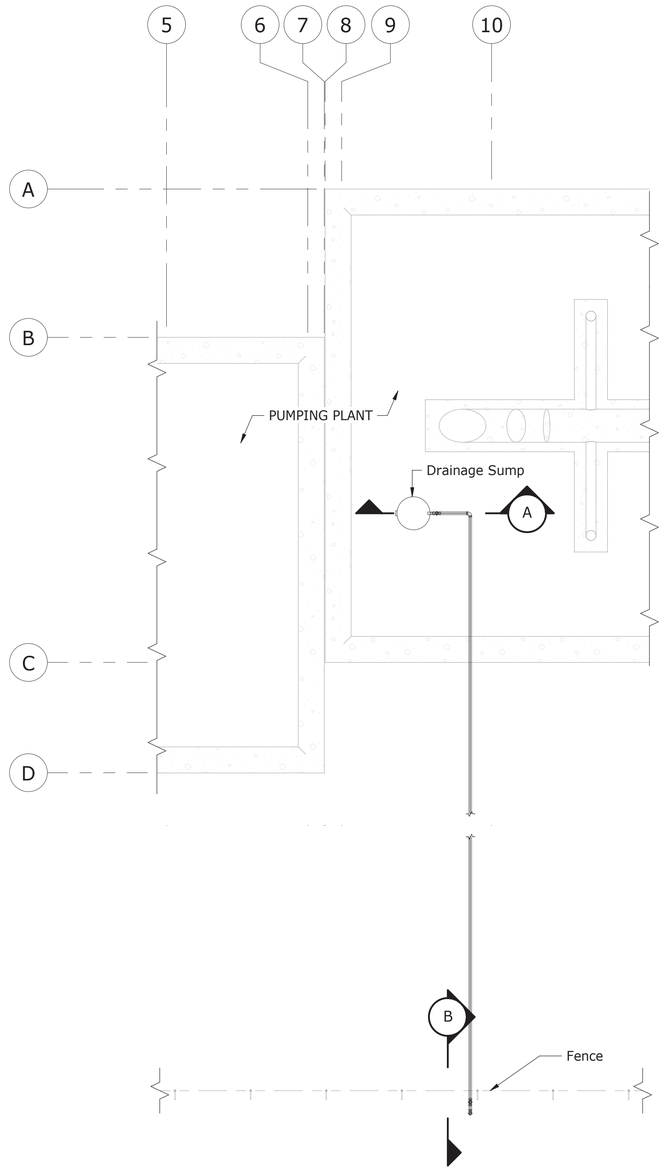

MAIN SUMP DISCHARGE - PLAN
Scale: 1/8" = 1'-0"

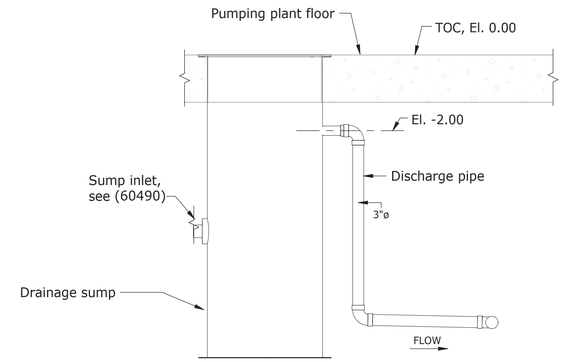

A SECTION
Scale: 1/2" = 1'-0"

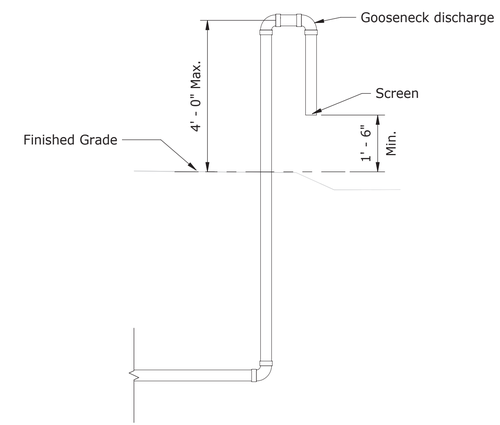

B SECTION
Scale: 1/2" = 1'-0"

GENERAL NOTES

A. See Drawing 60485 for Symbols, Abbreviations and Reference Drawings.
B. Drainage pipe shall be sloped, in the direction of flow, a minimum of 1/4 inch per linear foot of pipe.
C. Contractor shall provide complete connection between sump and discharge pipes.
D. Horizontal pipe penetrations through foundation are not allowed, discharge pipe shall be buried below foundation.
E. Contractor to field route pipe sump discharge to approved location and coordinate piping with COR.
F. Sump pump discharge pipe shall not be routed under Turnout Building.
G. Sump discharge piping in accordance with specification 33 11 16 - Site Water Utity Piping

0 4' 8' 16'
Scale: 1/8" = 1'-0"

0 1' 2' 4'
Scale: 1/2" = 1'-0"

RECLAMATION
Managing Water in the West

ALWAYS THINK **SAFETY**

U.S. DEPARTMENT OF THE INTERIOR
BUREAU OF RECLAMATION
NAVAJO GALLUP WATER SUPPLY PROJECT
NEW MEXICO
SAN JUAN LATERAL
PUMPING PLANT NOS. 4 AND 7

E. MORLEY
DESIGNED
E. MORLEY
DRAWN
M. DIUBALDO
CHECKED
TECH. APPR. E. MORLEY, P.E.
APPROVED Patrick Dawson
Peer Reviewer - Mechanical Equipment Group

DENVER, CO 2020-01-24

PLUMBING

MAIN SUMP PUMP DISCHARGE PIPE

1695-D-60502

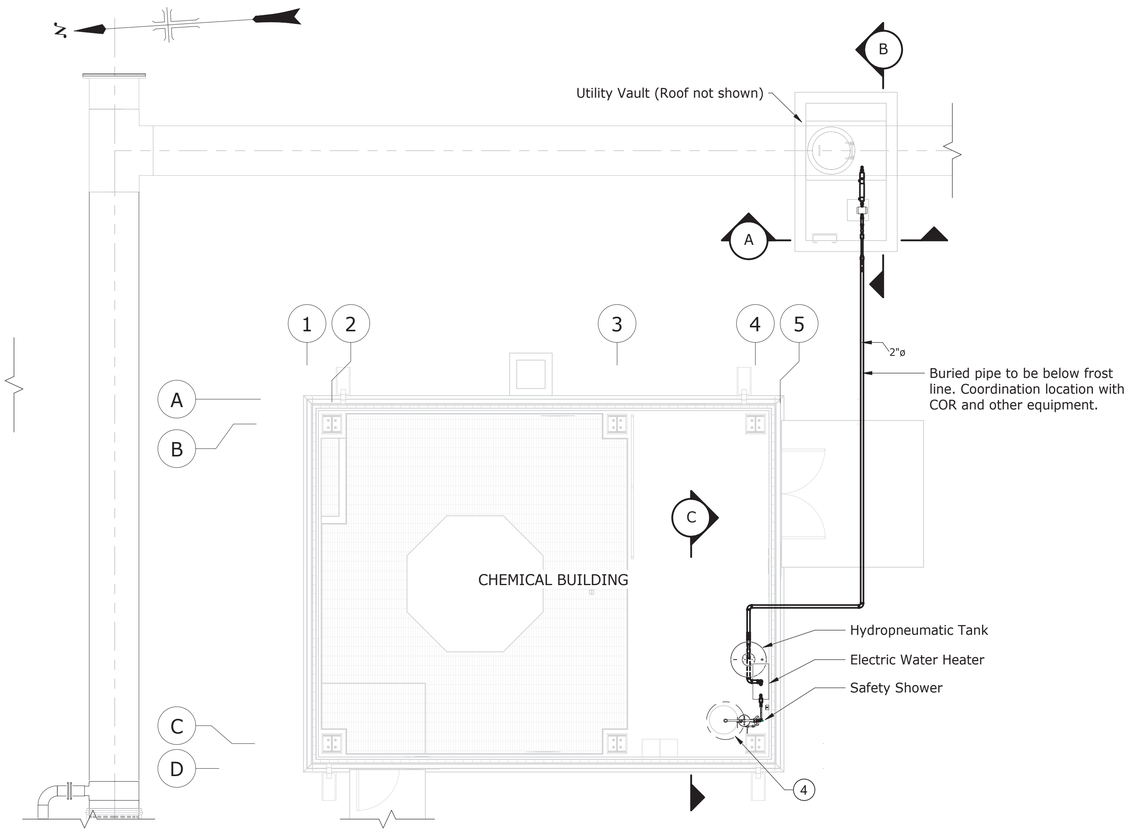

CHEMICAL BUILDING PLUMBING - PLAN

Scale: 3/16" = 1'-0"

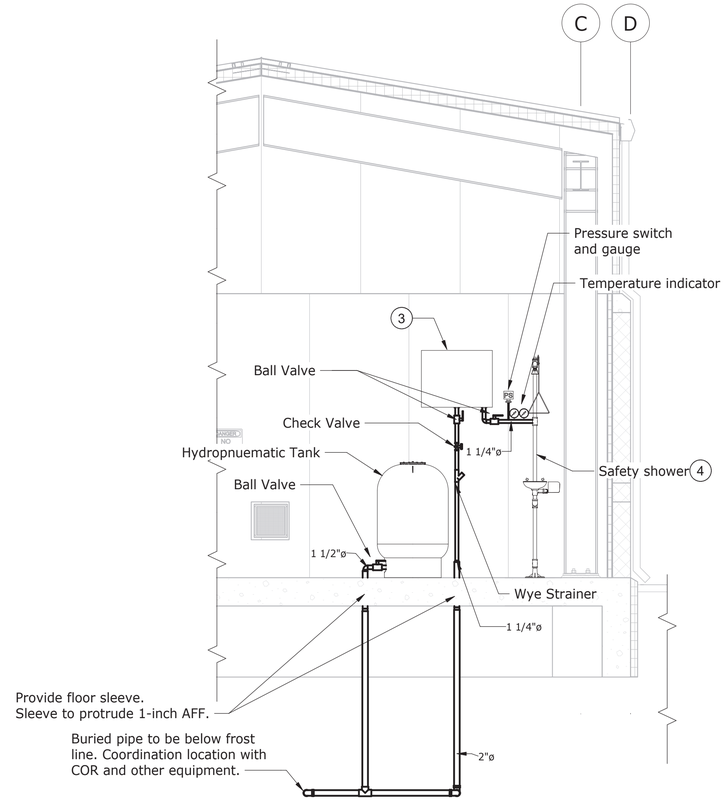

C SECTION

Scale: 3/8" = 1'-0"

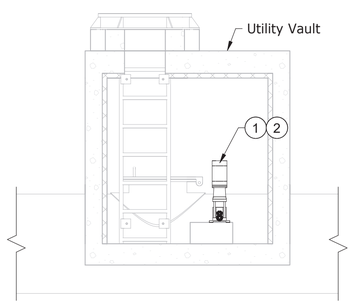

A SECTION

Scale: 3/8" = 1'-0"

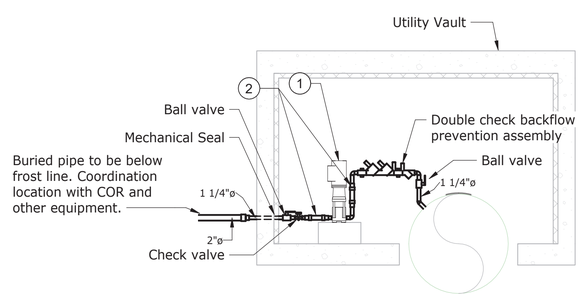

B SECTION

Scale: 3/8" = 1'-0"

GENERAL NOTES:

A. See Drawing 60485 for Symbols, Abbreviations and Reference Drawings.
B. See Drawing 60514 for operational set points and a system description.
C. Exposed piping shall be Copper Type K per Specification Section 22 10 12.
D. All buried piping shall be Sch 80 PVC per Specification Section 33 11 16.

FLAG NOTES: (#)

1. Booster pump is located in vault shown on site Drawing 60436. Mount pump on concrete pedestal per Standard Drawing 40-D-5599.
2. Provide flexible connections on pump inlet and outlet.
3. Install Water Heater with 8-in of clearance on each side and at height per manufacturer's recommendations.
4. Maintain safety shower minimum clearance radius of 16-in.
5. Coordinate tap location with Drawing 60597 and 60598.

0 5' 10' Scale: 3/16" = 1'-0"

0 2' 4' 6' Scale: 3/8" = 1'-0"

RECLAMATION
Managing Water in the West

ALWAYS THINK **SAFETY**

U.S. DEPARTMENT OF THE INTERIOR
BUREAU OF RECLAMATION
NAVAJO GALLUP WATER SUPPLY PROJECT
NEW MEXICO

SAN JUAN LATERAL
PUMPING PLANT NOS. 4 AND 7

DESIGNED	M. DiUbaldo
DRAWN	M. DiUbaldo
CHECKED	E. Morley
TECH. APPR.	M. DiUbaldo, P.E.
APPROVED (Peer Reviewer - Mechanical Equipment Group)	Patrick Dawson
DENVER, CO	2020-01-24

PLUMBING

PUMPING PLANT NO. 4: CHEMICAL BUILDING SERVICE WATER SYSTEM - PLAN AND SECTIONS

1695-D-60487

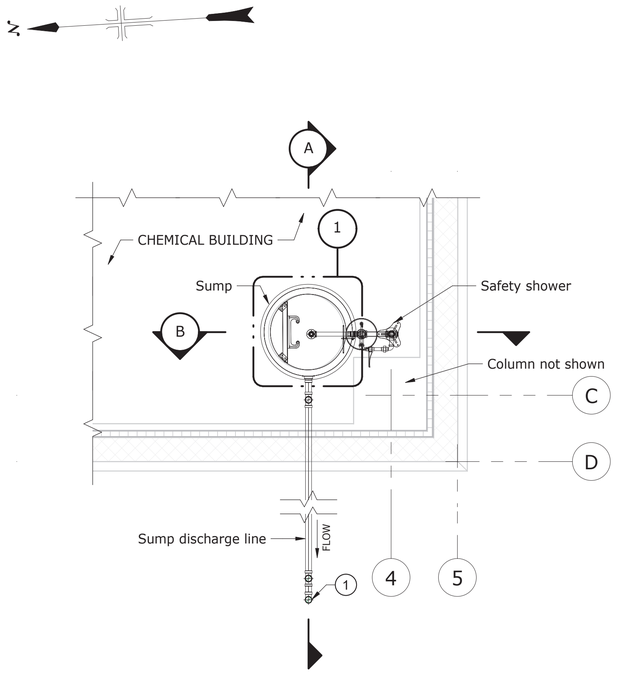

CHEMICAL BUILDING SAFETY SHOWER SUMP SYSTEM - PARTIAL PLAN
Scale: 1/2" = 1'-0"

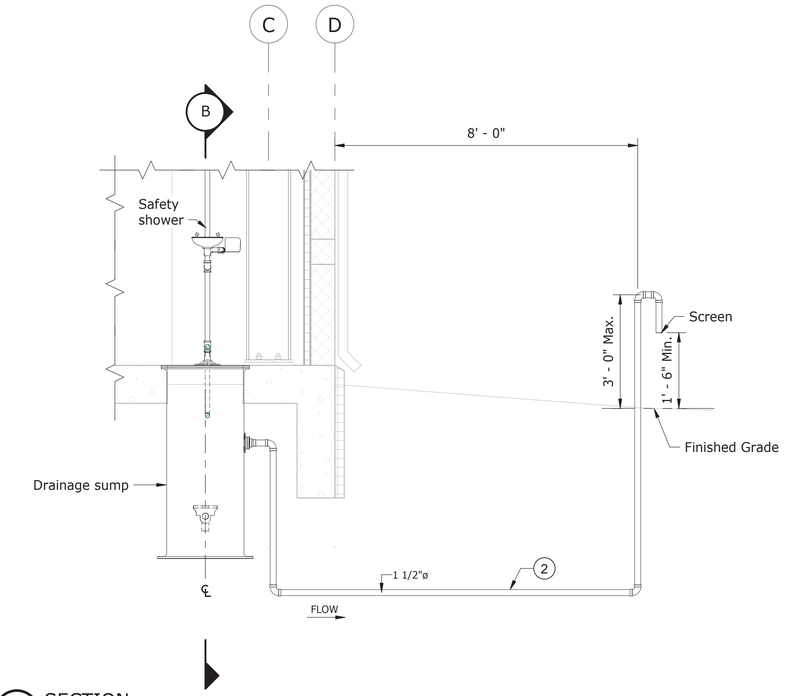

A SECTION
Scale: 1/2" = 1'-0"

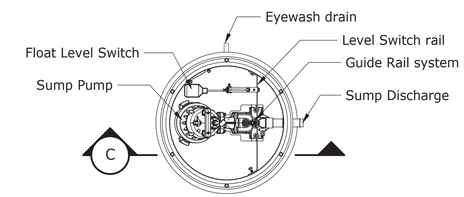

1 DETAIL - SIMPLEX SUMP TOP VIEW
Scale: 3/4" = 1'-0"

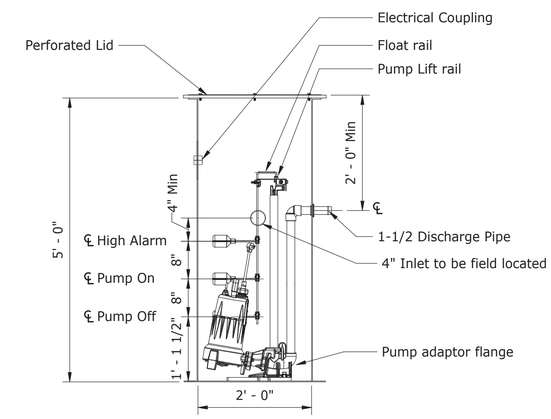

C SECTION - SUMP PUMP SYSTEM
Scale: 3/4" = 1'-0"

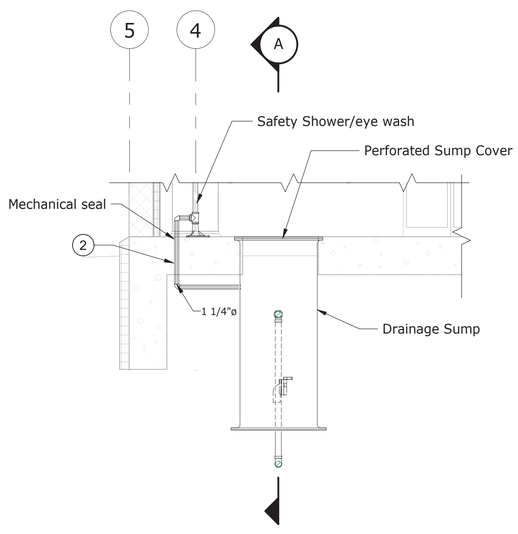

B SECTION
Scale: 1/2" = 1'-0"

GENERAL NOTES

A. See Drawing 60485 for Symbols, Abbreviations and Reference Drawings.
B. Center sump under the head of safety shower.
C. Route eyewash drain to sump under floor.
D. All Drainage pipe shall be sloped, in the direction of flow, a minimum of 1/4 inch per linear foot of pipe.
E. Contractor shall provide complete connection between sump and drainage pipes.
F. All floor penetrations shall be waterproof.
G. Horizontal pipe penetrations through foundation is not allowed, drainage pipe shall be buried below foundation.

FLAG NOTES

1. Contractor to pipe sump discharge to approved location and coordinate piping with COR.
2. Eyewah Drain and Sump discharge piping in accordance with specification 33 11 16 - Site Water Utity Piping

0 1' 2' 3'
Scale: 3/4" = 1'-0"

0 1' 2' 4'
Scale: 1/2" = 1'-0"

RECLAMATION
Managing Water in the West

ALWAYS THINK SAFETY

U.S. DEPARTMENT OF THE INTERIOR
BUREAU OF RECLAMATION
NAVAJO GALLUP WATER SUPPLY PROJECT
NEW MEXICO

SAN JUAN LATERAL
PUMPING PLANT NOS. 4 AND 7

E. MORLEY
DESIGNED
E. MORLEY
DRAWN
M. DIUBALDO
CHECKED
TECH. APPR. E. MORLEY, P.E.
APPROVED Patrick Dawson
Peer Reviewer - Mechanical Equipment Group

DENVER, CO 2020-01-24

PLUMBING

PUMPING PLANT NO. 4: CHEMICAL BUILDING SAFETY SHOWER SUMP SYSTEM - PLAN AND SECTIONS

1695-D-60501

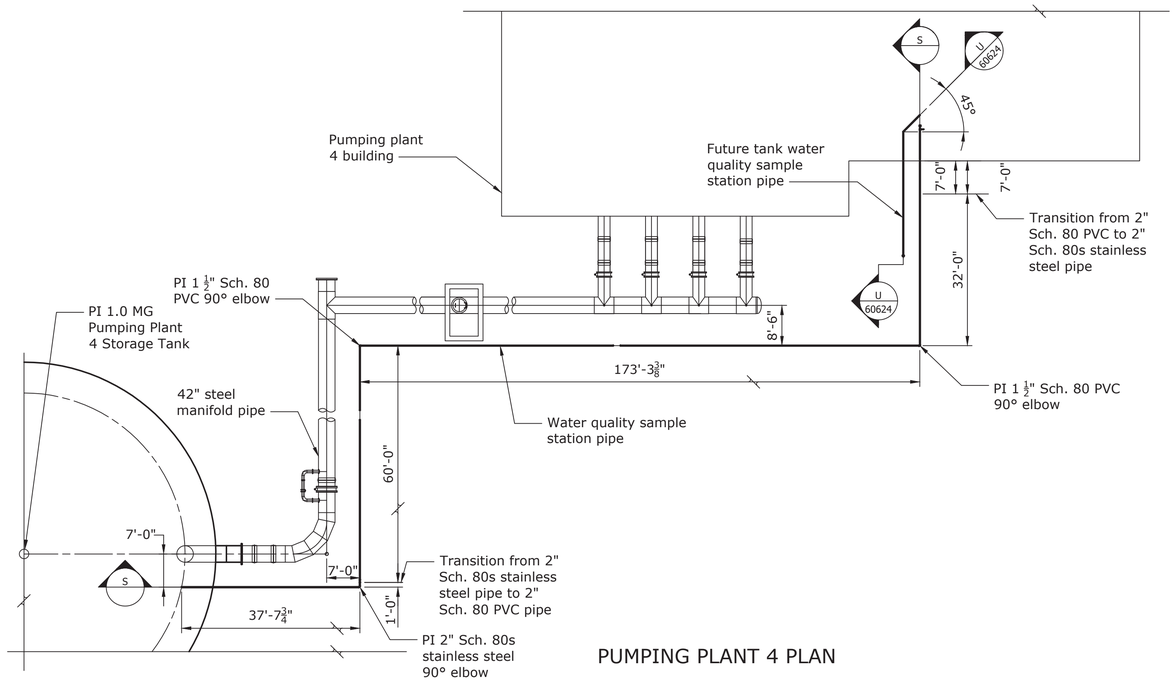

PUMPING PLANT 4 PLAN

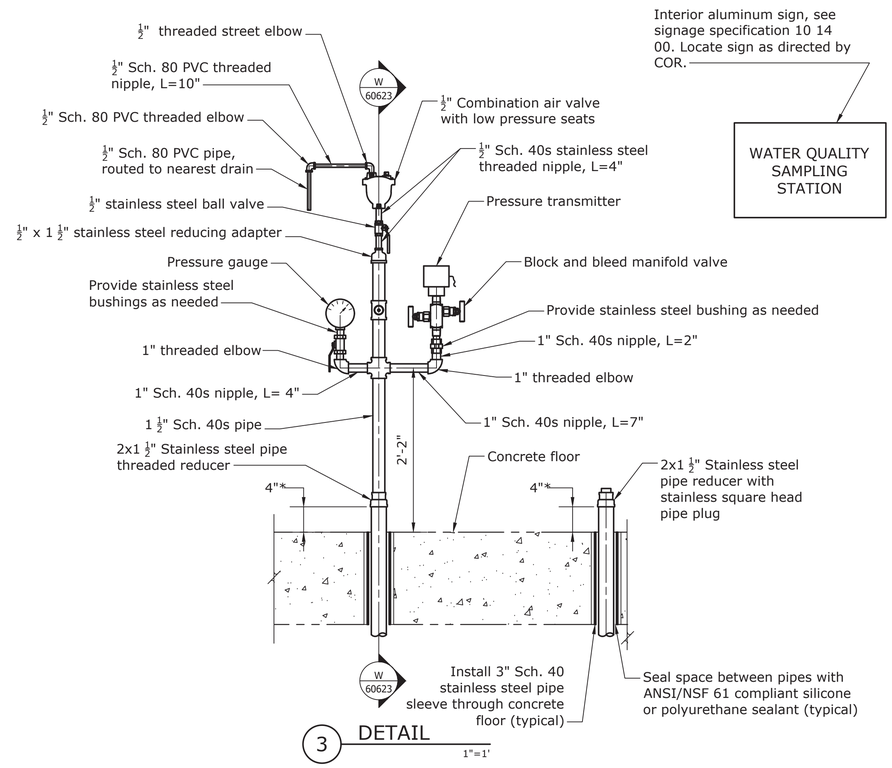

3 DETAIL
1"=1'

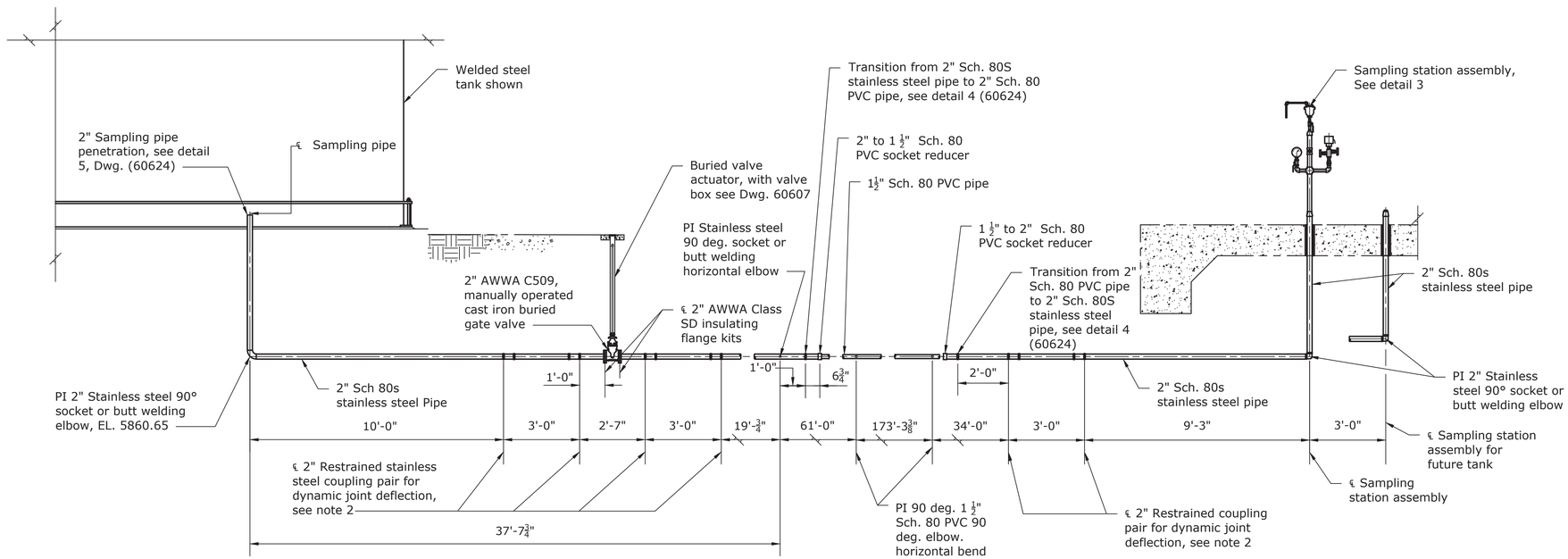

S SECTION
3/8"=1'

NOTES

1. For General Notes, see Dwg. (60595).
2. Coupling manufacturer to determine distance between restrained coupling pairs for dynamic joint deflection.
3. PVC socket connections to be solvent welded.
4. '' * '' to be field verified.

RECLAMATION
Managing Water in the West

ALWAYS THINK SAFETY

U.S. DEPARTMENT OF THE INTERIOR
BUREAU OF RECLAMATION
NAVAJO-GALLUP WATER SUPPLY PROJECT
NEW MEXICO

SAN JUAN LATERAL

PUMPING PLANT NOS. 4 AND 7

REV. NO.	DATE	DESCRIPTION
1	2020-01-21	D GENERAL REVISIONS

Stephen, Ryan D P.E.

Kent Schlundt
DESIGNED
Amy Young
DRAWN
Kent Schlundt
CHECKED
Adams, Lucas P.E.
TECH. APPR.
Hummel, Terry L
APPROVED
ADMIN APPROVAL - Mgr Hydr Equip

DENVER, CO 2018-08-23

PUMPING PLANT NO. 4
WATER STORAGE TANK -
WATER QUALITY SAMPLING
SYSTEM

PLAN, SECTIONS AND
DETAILS

1695-D-60622

SHEET 1

Released

DATE AND TIME PLOTTED
Not Plotted
PLOTTED BY
Not Plotted

CAD SYSTEM
AUTOCAD
CAD FILENAME
UNKNOWN

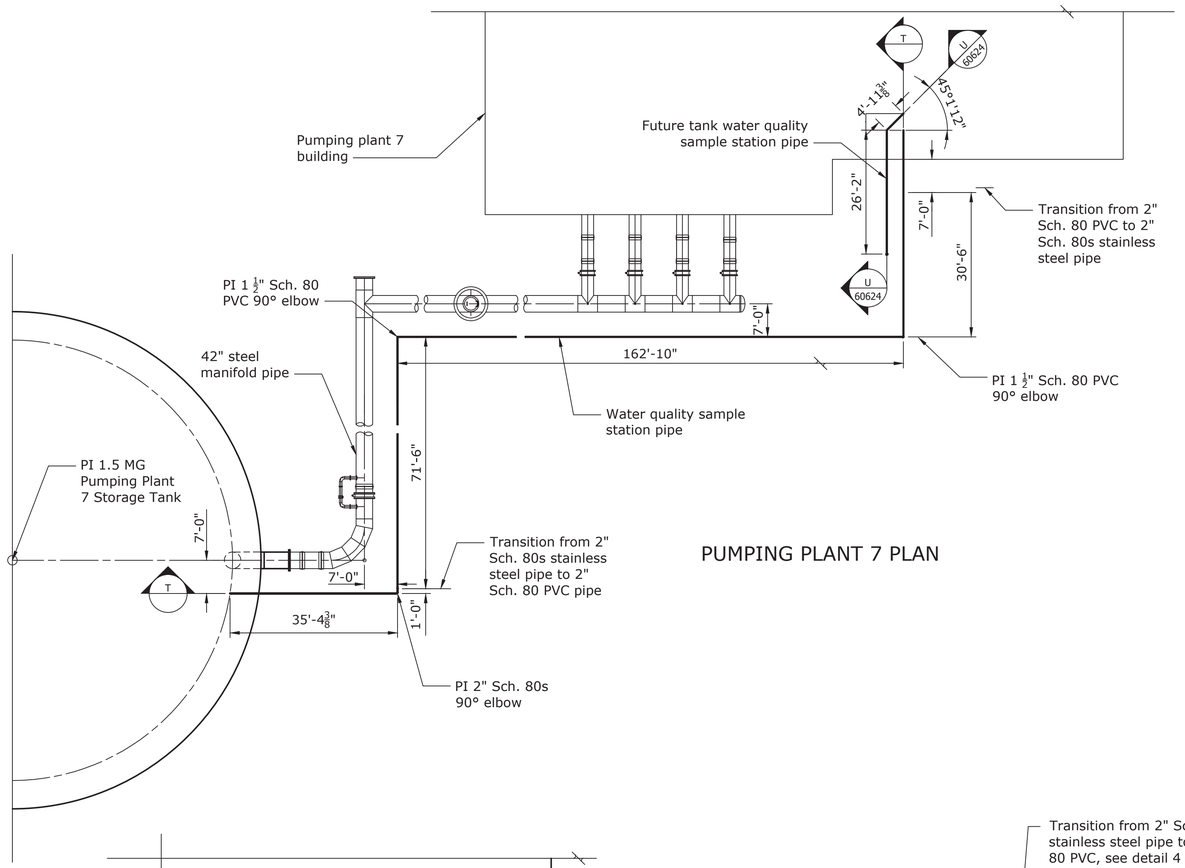

PUMPING PLANT 7 PLAN

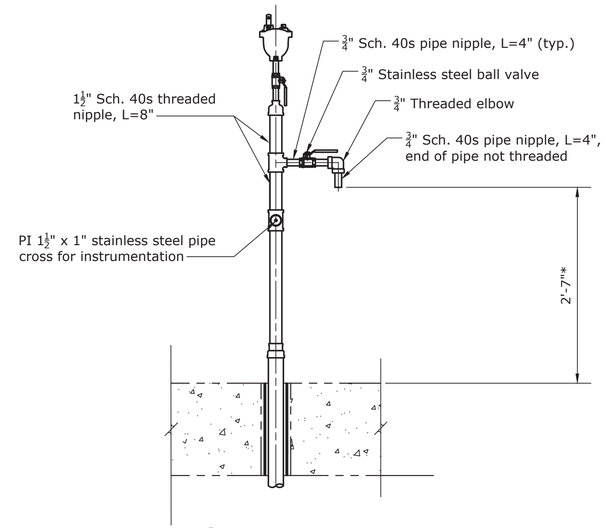

W SECTION (60622) 1"=1'

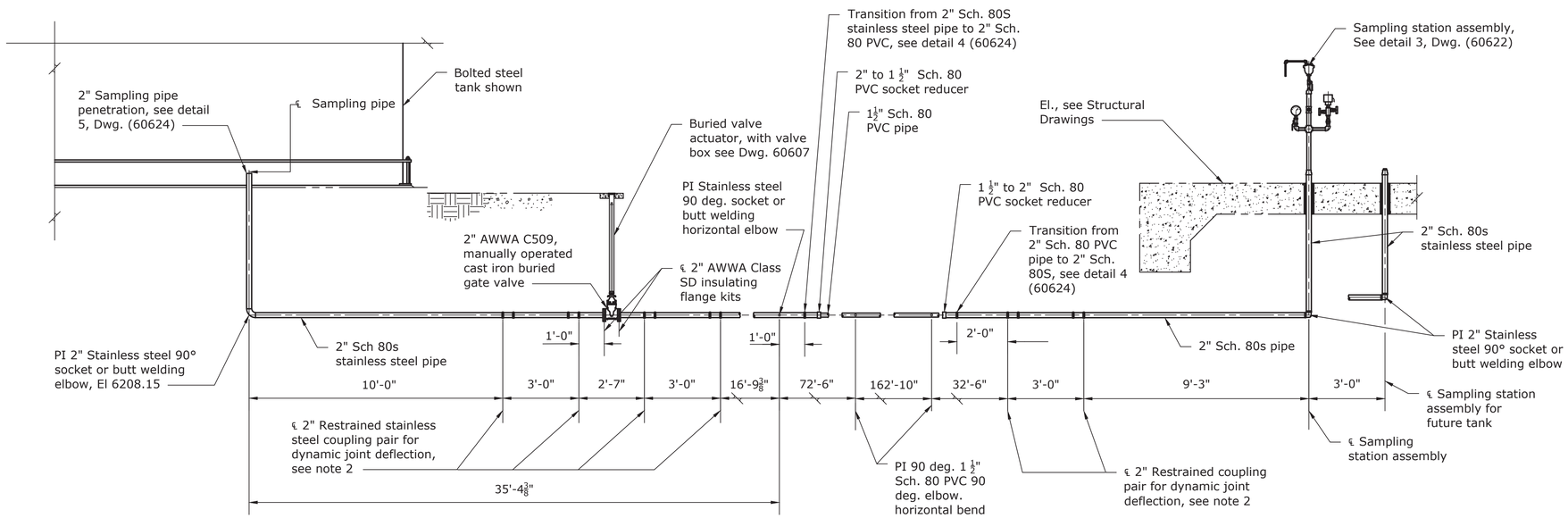

T SECTION 3/8"=1'

NOTES

1. For General Notes, see Dwg. (60595).
2. Coupling manufacturer to determine distance between restrained coupling pairs for dynamic joint deflection.
3. PVC socket connections to be solvent welded.

RECLAMATION
Managing Water in the West

ALWAYS THINK SAFETY

U.S. DEPARTMENT OF THE INTERIOR
BUREAU OF RECLAMATION
NAVAJO-GALLUP WATER SUPPLY PROJECT
NEW MEXICO

SAN JUAN LATERAL

PUMPING PLANT NOS. 4 AND 7

REV NO 1.2 | 2020-01-23 | D | GENERAL REVISIONS | Stephen, Ryan D P.E.

Kent SChlundt
DESIGNED
Amy Young
DRAWN
Kent Schlundt
CHECKED
Adams, Lucas P.E.
TECH. APPR.
Hummel, Terry L
APPROVED
ADMIN APPROVAL - Mgr Hydr Equip

DENVER, CO 2018-08-23

PUMPING PLANT NO. 7 WATER STORAGE TANK - WATER QUALITY SAMPLING SYSTEM

PLAN, SECTIONS AND DETAILS

1695-D-60623

SHEET 2

Released

DATE AND TIME PLOTTED Not Plotted
PLOTTED BY Not Plotted

CAD SYSTEM AUTOCAD
CAD FILENAME UNKNOWN

Released

Note: Downstream transition opposite hand

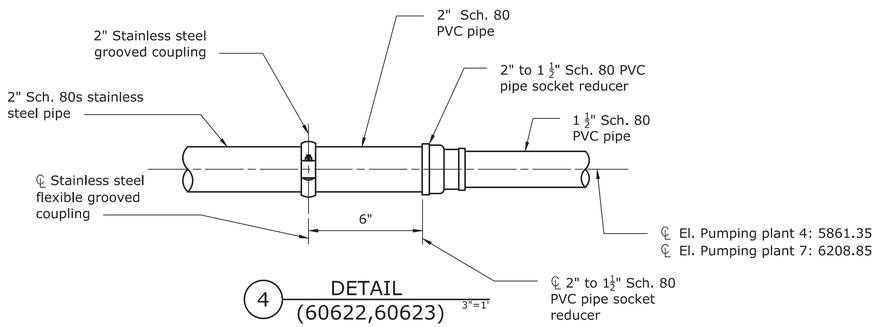

4 DETAIL (60622,60623) 3"=1'

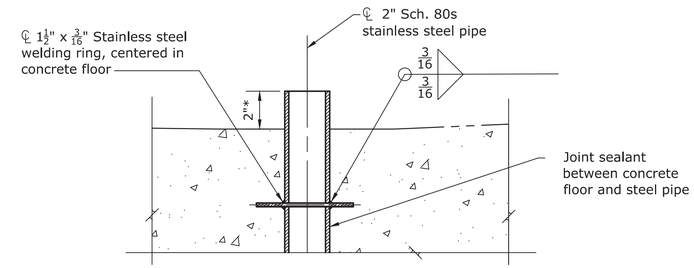

5 Sample Pipe Penetration (60622,60623) 3"=1'
(Concrete and Bolted Steel Tank)

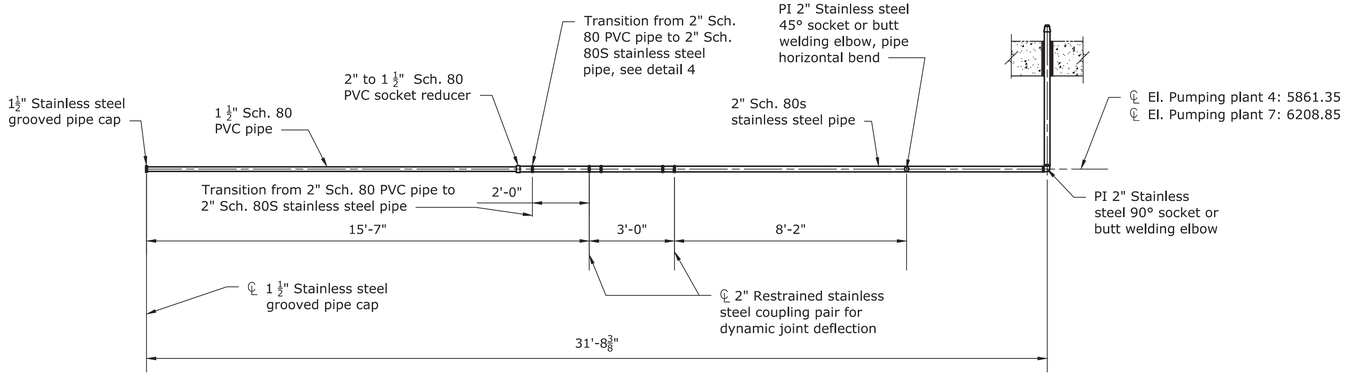

U SECTION (60622, 60623) 3/8"=1'

NOTES

1. For General Notes, see Dwg. (60595).

RECLAMATION
Managing Water in the West

ALWAYS THINK SAFETY

U.S. DEPARTMENT OF THE INTERIOR
BUREAU OF RECLAMATION
NAVAJO-GALLUP WATER SUPPLY PROJECT
NEW MEXICO

SAN JUAN LATERAL

PUMPING PLANT NOS. 4 AND 7

Kent Schlundt
DESIGNED
Amy Young
DRAWN
Kent Schlundt
CHECKED
Adams, Lucas P.E.
TECH. APPR.
Hummel, Terry L
APPROVED
ADMIN APPROVAL - Mgr Hydr Equip

DENVER, CO 2018-08-23

WATER STORAGE TANKS - WATER QUALITY SAMPLING SYSTEM

SECTION AND DETAILS

1695-D-60624

SHEET 3

DATE AND TIME PLOTTED Not Plotted
PLOTTED BY Not Plotted
CAD SYSTEM AUTOCAD
CAD FILENAME UNKNOWN

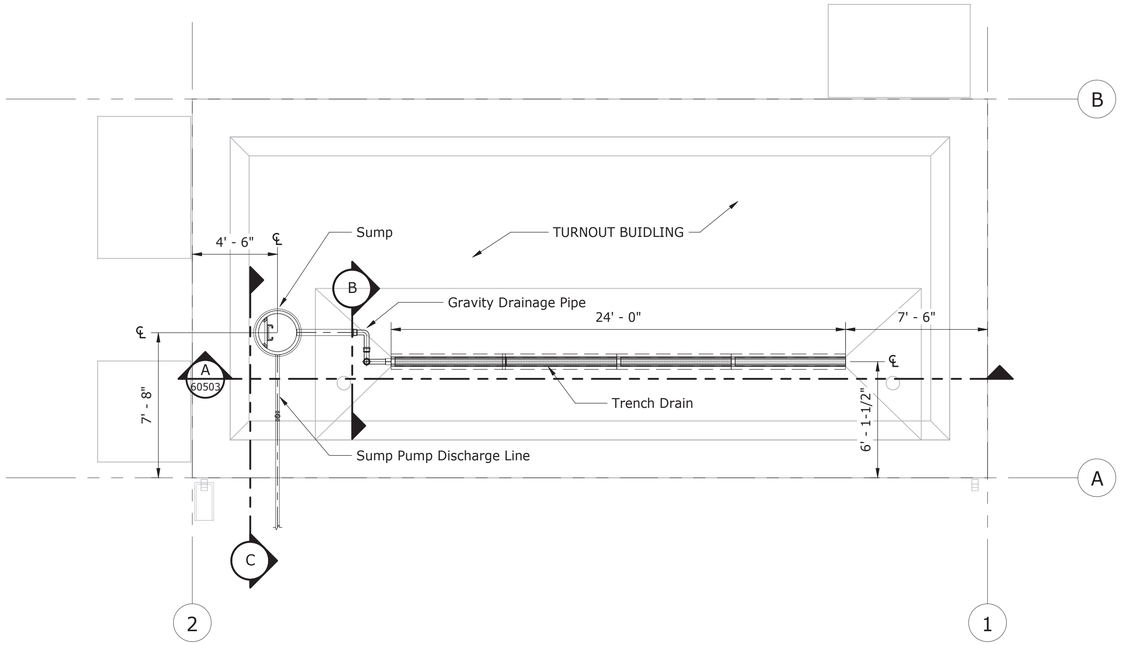

PLAN VIEW - GRAVITY DRAINAGE AND SUMP
Scale: 1/4" = 1'-0"

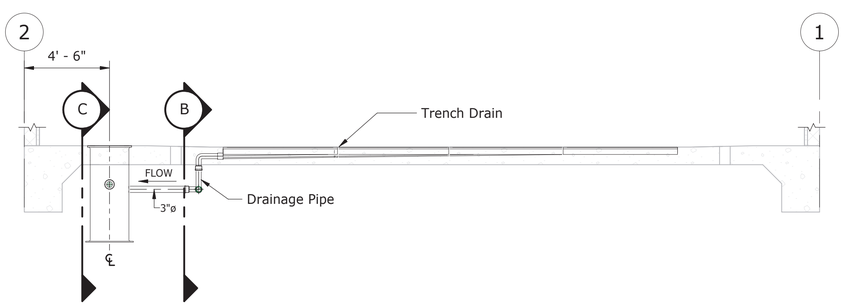

A 60389 SECTION - GRAVITY DRAINAGE
Scale: 1/4" = 1'-0"

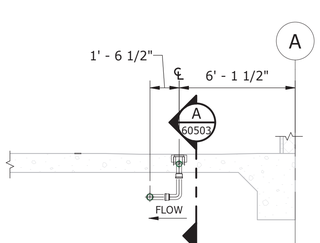

B 60503 SECTION - GRAVITY DRAINAGE
Scale: 1/4" = 1'-0"

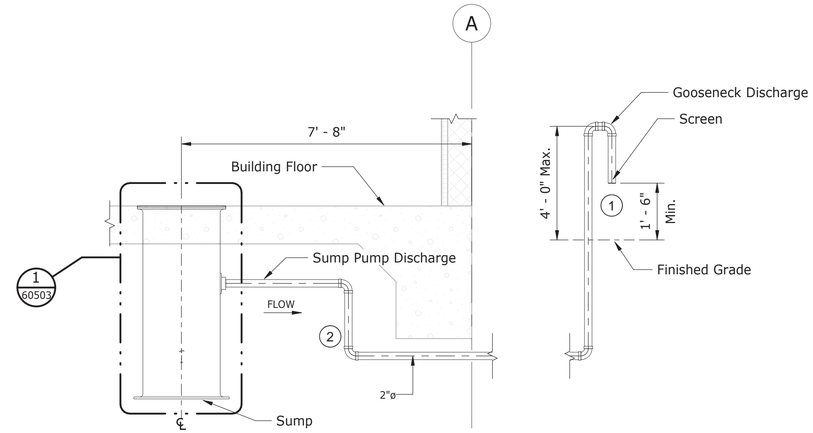

C SECTION - SUMP DISCHARGE
Scale: 1/2" = 1'-0"

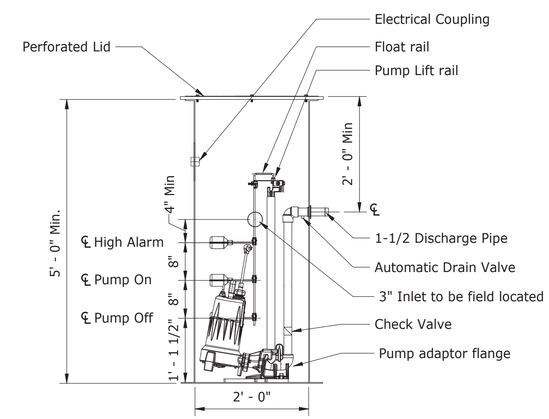

1 60503 DETAIL - SUMP PUMP SYSTEM
Scale: 3/4" = 1'-0"

GENERAL NOTES

A. See Drawing 60485 for Symbols, Abbreviations and Reference Drawings.
B. All Drainage pipe shall be sloped, in the direction of flow, a minimum of 1/4 inch per linear foot of pipe.
C. Contractor shall provide complete connection between sump and drainage pipes.
D. All floor penetrations shall be waterproof.
E. Horizontal pipe penetrations through foundation is not allowed, drainage pipe shall be buried below foundation.
F. Sump discharge piping in accordance with specification 33 11 16 - Site Water Utity Piping

FLAG NOTES (#)

1. Contractor to pipe sump discharge to approved location and coordinate piping with COR.

Scale: 1/4" = 1'-0" (0, 2', 4', 8')
Scale: 1/2" = 1'-0" (0, 1', 2', 4')
Scale: 3/4" = 1'-0" (0, 1', 2', 3')

RECLAMATION
Managing Water in the West

ALWAYS THINK SAFETY

U.S. DEPARTMENT OF THE INTERIOR
BUREAU OF RECLAMATION
NAVAJO GALLUP WATER SUPPLY PROJECT
NEW MEXICO
SAN JUAN LATERAL
PUMPING PLANT NOS. 4 AND 7

E. Morley
DESIGNED
E. Morley
DRAWN
M. DiUbaldo
CHECKED
TECH. APPR. Elizabeth Morley, P.E.
APPROVED Patrick Dawson, P.E.
Admin Approver - Mechanical Equipment Group
DENVER, CO 2020-01-24

TURNOUT BUILDING PLUMBING

GRAVITY DRAINAGE AND SUMP - PLANS, SECTIONS AND DETAIL

1695-D-60503

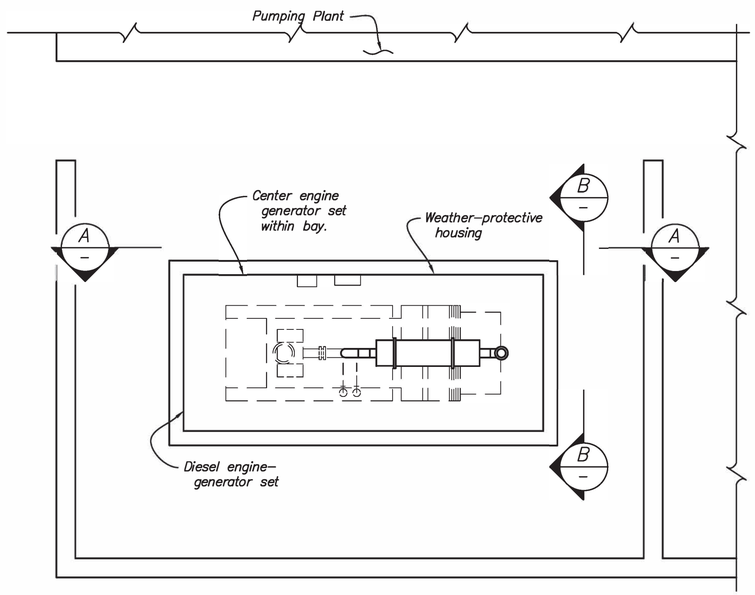

PLAN
(FUEL VENT PIPES NOT SHOWN)

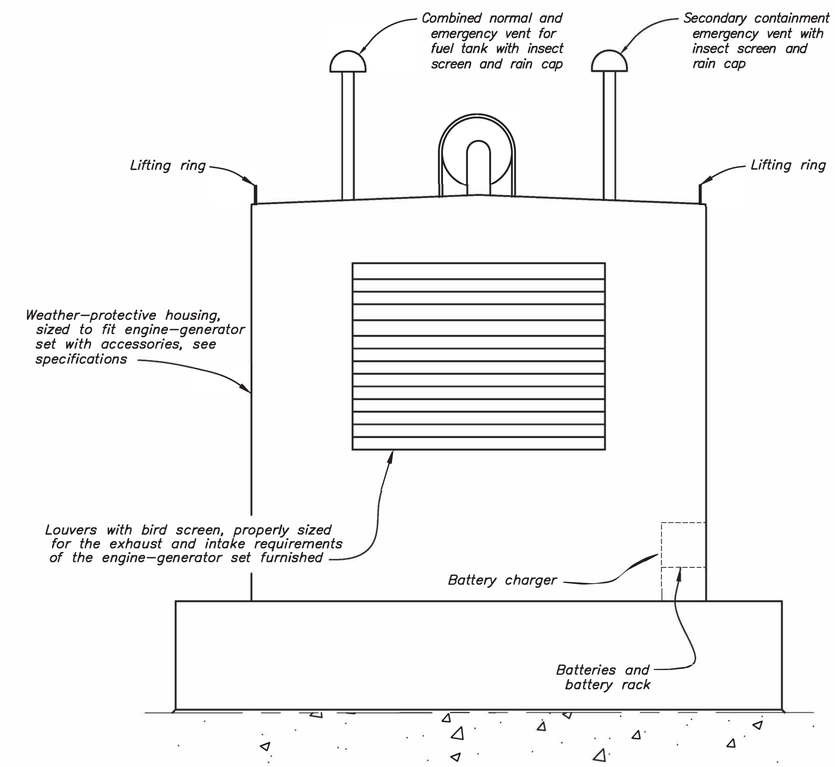

B – SECTION (ROTATED)
NOT TO SCALE

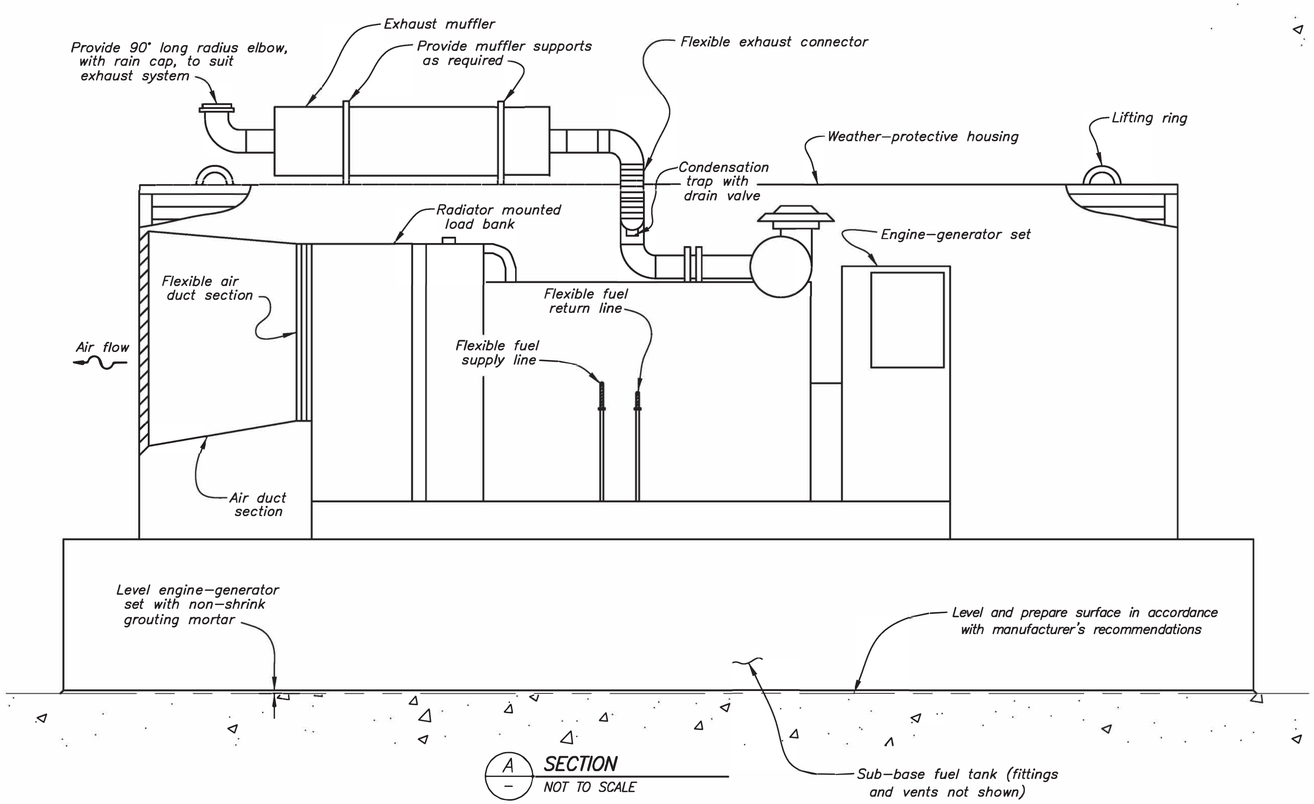

A – SECTION
NOT TO SCALE

NOTES

A. Contractor shall furnish and install all expansion anchors and anchor bolts required by engine-generator manufacturer for a complete installation.
B. Equipment may vary; follow manufacturer's recommendations for installation.

RECLAMATION
Managing Water in the West

ALWAYS THINK SAFETY

U.S. DEPARTMENT OF THE INTERIOR
BUREAU OF RECLAMATION
NAVAJO-GALLUP WATER SUPPLY PROJECT
NEW MEXICO

SAN JUAN LATERAL

PUMPING PLANT NOS. 4 AND 7

E. Paquette
DESIGNED
E. Paquette
DRAWN
Z. Cepak
CHECKED
Silos, Adalberto A P.E.
TECH. APPR.
Dawson, Patrick K P.E.
APPROVED
ADMIN APPROVAL - Supervisor, Mechanical Equipment Group

DENVER, CO 2020-01-24

PUMPING PLANT NO. 4
ENGINE-GENERATOR

LAYOUT

1695-D-60491

SHEET 1

Released

DATE AND TIME PLOTTED
JANUARY 24, 2020 16:00
PLOTTED BY
EPAQUETTE

CAD SYSTEM
AutoCAD Rel. 22.0s
CAD FILENAME
1695-D-60491-AD-1.DWG

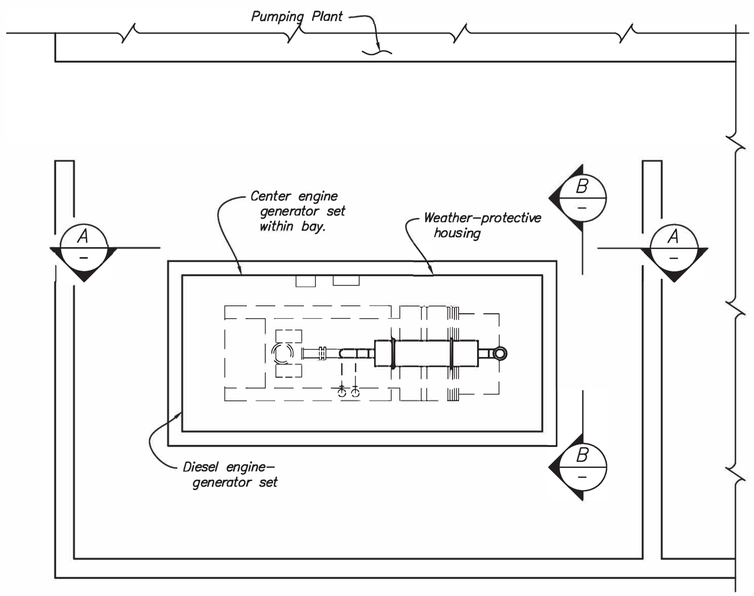

PLAN
(FUEL VENT PIPES NOT SHOWN)

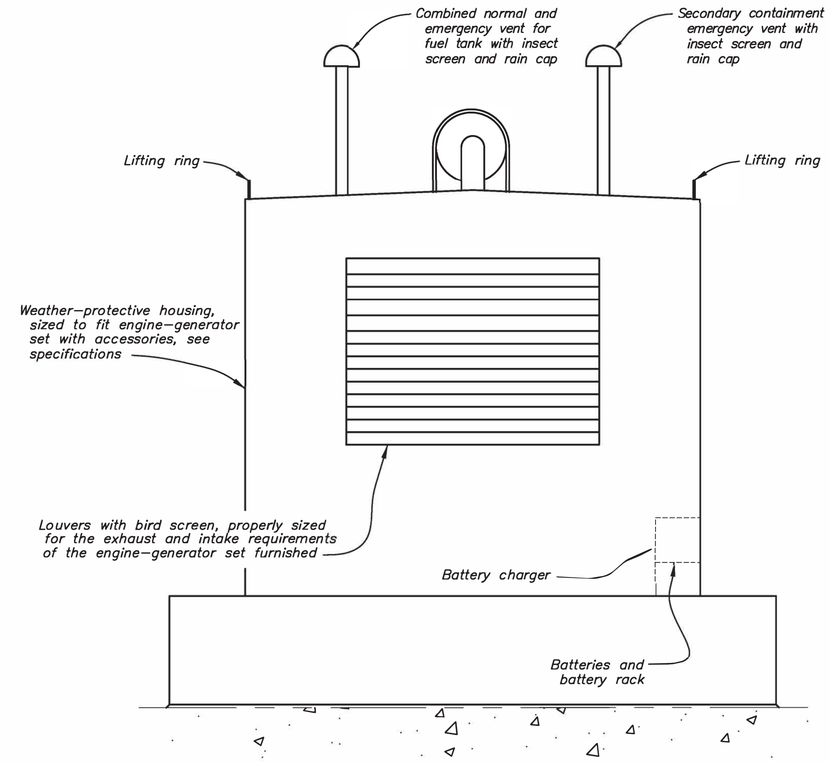

B SECTION (ROTATED)
NOT TO SCALE

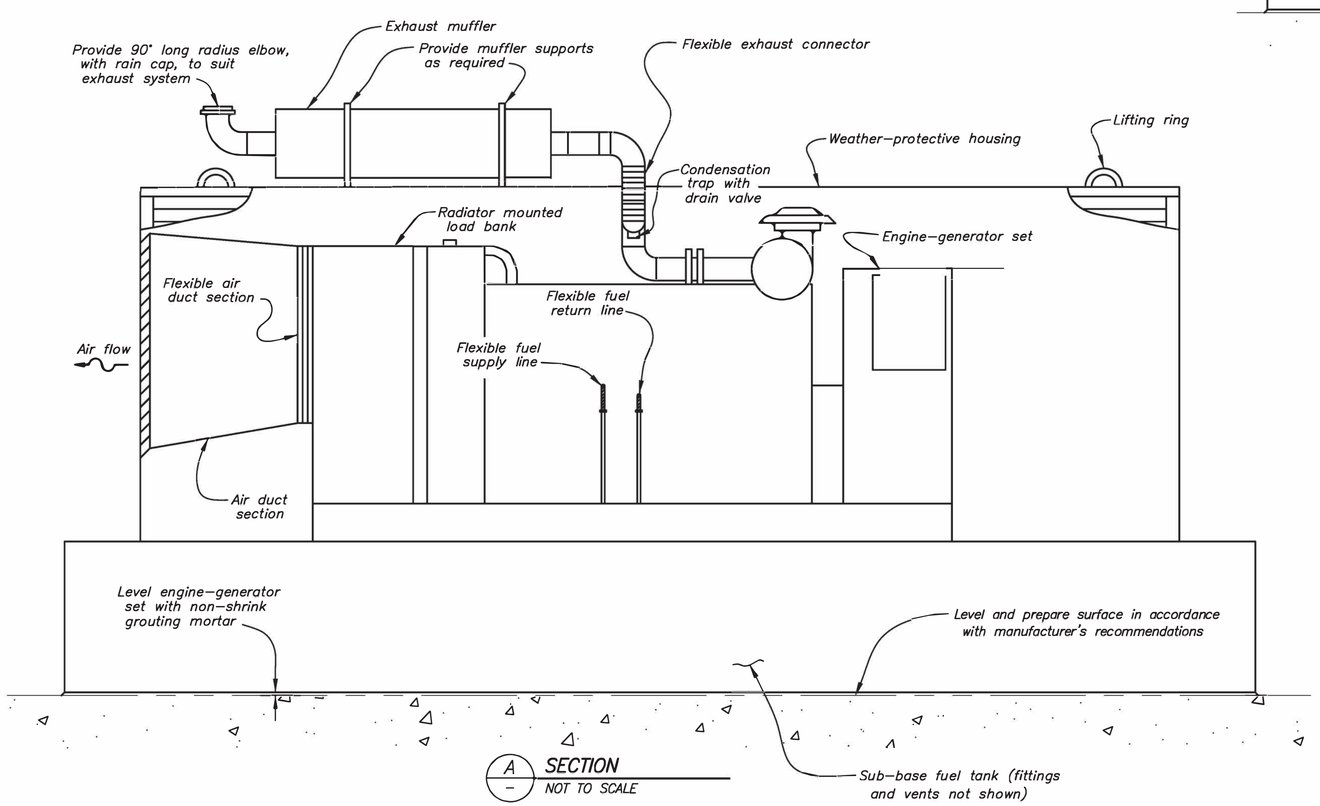

A SECTION
NOT TO SCALE

NOTES

A. Contractor shall furnish and install all expansion anchors and anchor bolts required by engine-generator manufacturer for a complete installation.
B. Equipment may vary; follow manufacturer's recommendations for installation.

RECLAMATION
Managing Water in the West

ALWAYS THINK SAFETY

U.S. DEPARTMENT OF THE INTERIOR
BUREAU OF RECLAMATION
NAVAJO-GALLUP WATER SUPPLY PROJECT
NEW MEXICO

SAN JUAN LATERAL

PUMPING PLANT NOS. 4 AND 7

E. Paquette
DESIGNED
E. Paquette
DRAWN
Z. Cepak
CHECKED
Silos, Adalberto A P.E.
TECH. APPR.
Dawson, Patrick K P.E.
APPROVED
ADMIN APPROVAL - Supervisor, Mechanical Equipment Group

DENVER, CO 2020-01-24

PUMPING PLANT NO. 7
ENGINE-GENERATOR

LAYOUT

1695-D-60492

SHEET 1

Released

DATE AND TIME PLOTTED
JANUARY 24, 2020 16:02
PLOTTED BY
EPAQUETTE

CAD SYSTEM
AutoCAD Rel. 22.0s
CAD FILENAME
1695-D-60492-RD-1.DWG

CHLORINATION SYSTEM PIPE SCHEDULE FOR PUMPING PLANT NO. 4

LINE	MATERIAL	NOMINAL SIZE	SOLUTION	PURPOSE
25	PTFE tubing inside schedule 40 PVC electrical conduit	1/4" ID x 3/8" OD (tubing), 1-1/2" (conduit)	sodium hypochlorite	feed to Storage Tank S0501-TK-001
26	PTFE tubing inside schedule 40 PVC electrical conduit	1/4" ID x 3/8" OD (tubing), 1 1/2" (conduit)	sodium hypochlorite	feed to Storage Tank S0501-TK-002 (future)
21	PTFE tubing inside schedule 40 PVC electrical conduit	1/4" ID x 3/8" OD (tubing), 1-1/2" (conduit)	water	chlorine residual sample from Storage Tank S0501-TK-001
22	PTFE tubing inside schedule 40 PVC electrical conduit	1/4" ID x 3/8" OD (tubing), 1 1/2" (conduit)	water	chlorine residual sample from Storage Tank S0501-TK-002 (future)
19	schedule 80 PVC piping	1"	water	chlorine residual sample return to Storage Tank S0501-TK-001
20	schedule 80 PVC piping	1"	water	chlorine residual sample return to Storage Tank S0501-TK-002 (future)
A	schedule 80 PVC piping	2"	sodium hypochlorite	feed pump and equipment panel supply
B	schedule 80 PVC piping	3"	sodium hypochlorite	FRP storage tank filling
C	schedule 80 PVC piping	6"	sodium hypochlorite	FRP storage tank vent and overflow
D	schedule 80 PVC piping	1"	sodium hypochlorite	pump calibration column overflow
PVC - polyvinyl chloride, PTFE - polytetrafluoroethylene, FRP - fiberglass reinforced plastic				

NOTES

1. Lines 19, 20, 21, 22, 25, and 26 match P&ID drawings (60507), (60512), and (60513).
2. Lines A through D not specifically identified as such in P&ID drawings.
3. Use schedule 40 PVC electrical conduit long sweep elbows for Lines 21, 22, 25, and 26.
4. Install Lines 20, 22, and 26 through pipe chase and cap until future construction of Storage Tank S0501-TK-002.

RECLAMATION
Managing Water in the West

ALWAYS THINK **SAFETY**

U.S. DEPARTMENT OF THE INTERIOR
BUREAU OF RECLAMATION
NAVAJO GALLUP WATER SUPPLY PROJECT
NEW MEXICO
SAN JUAN LATERAL
PUMPING PLANT NOS. 4 AND 7

Anthony Kennedy, P.E.
DESIGNED
Anthony Kennedy, P.E.
DRAWN
John Walp, P.E.
CHECKED
TECH. APPR. Miguel Arias-Paic, P.E.
APPROVED Scott Irvine
Peer Reviewer - Water Treatment Group

DENVER, CO 2020-01-24

PUMPING PLANT NO. 4 CHLORINATION SYSTEM

PIPE SCHEDULE

1695-D-60472

RECLAMATION
Managing Water in the West

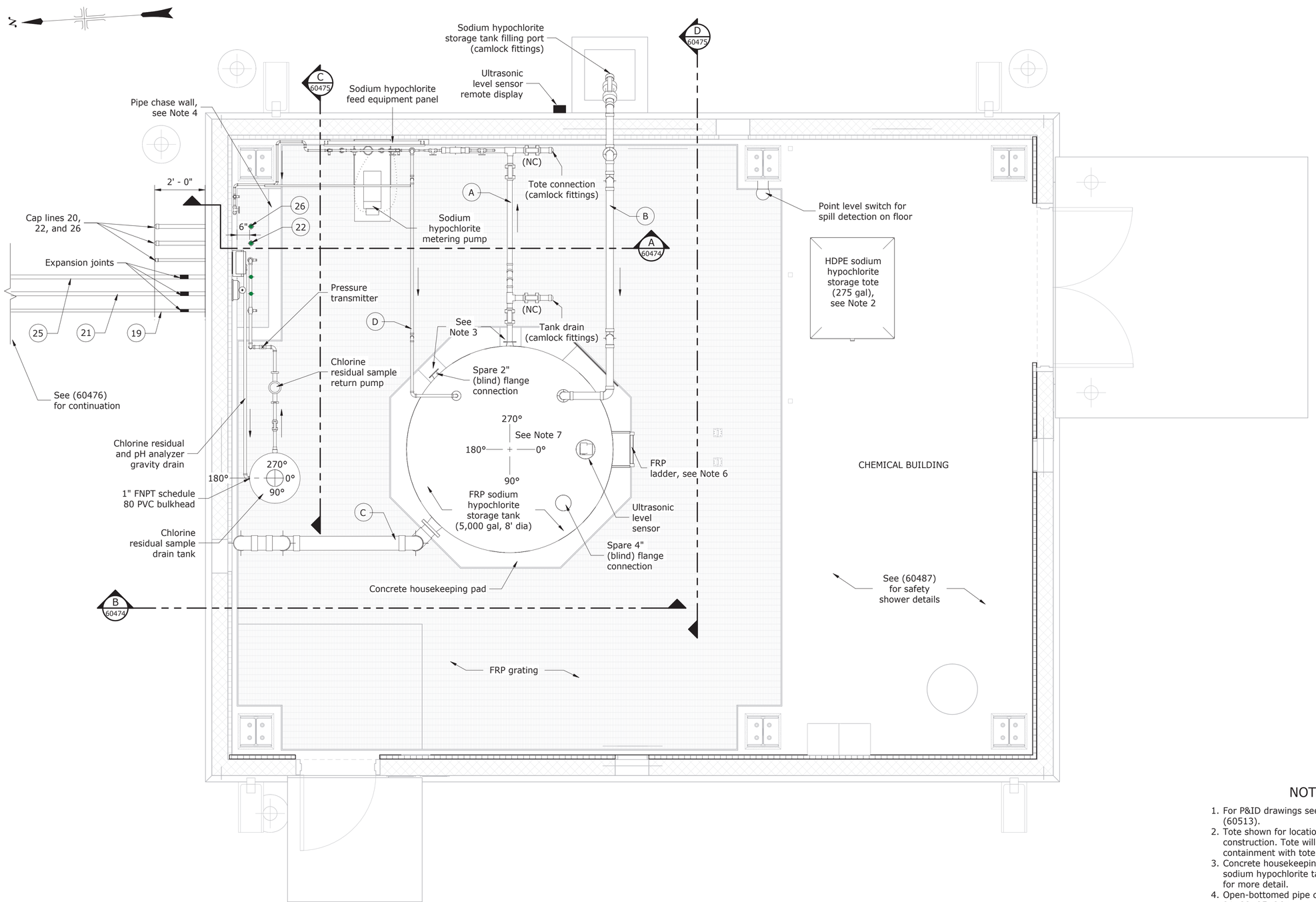

PLAN - ROOF NOT SHOWN FOR CLARITY

Scale: 1/2" = 1'-0"

NOTES

1. For P&ID drawings see (60507), (60512), and (60513).
2. Tote shown for location purposes only, not for construction. Tote will require secondary containment with tote shipment.
3. Concrete housekeeping pad blockouts for sodium hypochlorite tank outlets, see (60430) for more detail.
4. Open-bottomed pipe chase is for Lines 19, 20, 21, 22, 25, 26 to enter the Chemical Building without having to penetrate the concrete foundation.
5. Arrows show the direction of liquid (water or sodium hypochlorite) flow.
6. Include fall protection as required.
7. See specifications for flanged connection angle placement.
8. All equipment shown are generic, see specifications for more detail.

ALWAYS THINK **SAFETY**

U.S. DEPARTMENT OF THE INTERIOR
BUREAU OF RECLAMATION

NAVAJO GALLUP WATER SUPPLY PROJECT
NEW MEXICO

SAN JUAN LATERAL
PUMPING PLANT NOS. 4 AND 7

DESIGNED	Anthony Kennedy, P.E.
DRAWN	Anthony Kennedy, P.E.
CHECKED	John Walp, P.E.
TECH. APPR.	Miguel Arias-Paic, P.E.
APPROVED (Peer Reviewer - Water Treatment Group)	Scott Irvine

DENVER, CO 2020-01-24

PUMPING PLANT NO. 4 CHLORINATION SYSTEM

PLAN

1695-D-60473

RECLAMATION
Managing Water in the West

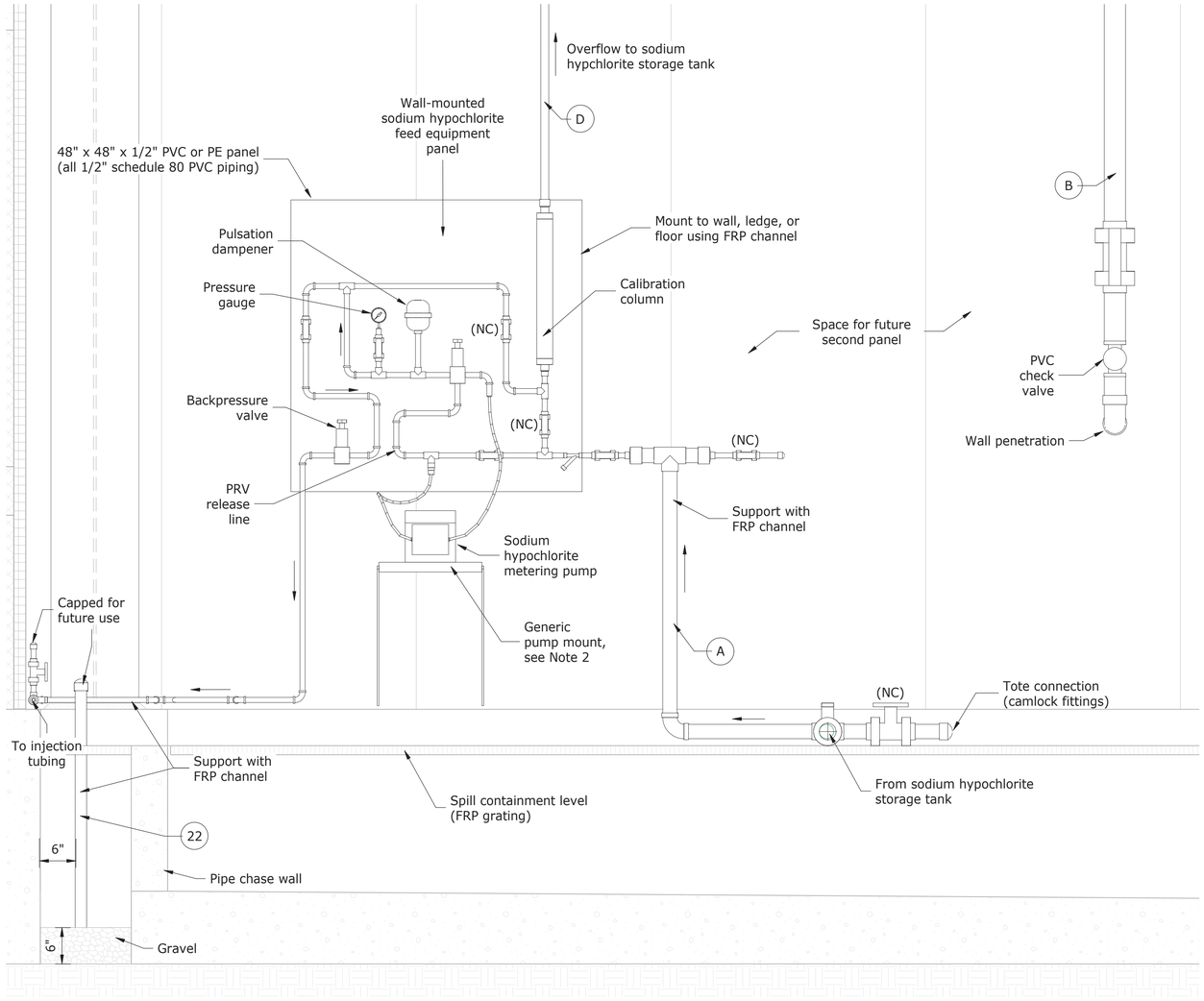

A 60473 SECTION
Scale: 1" = 1'-0"

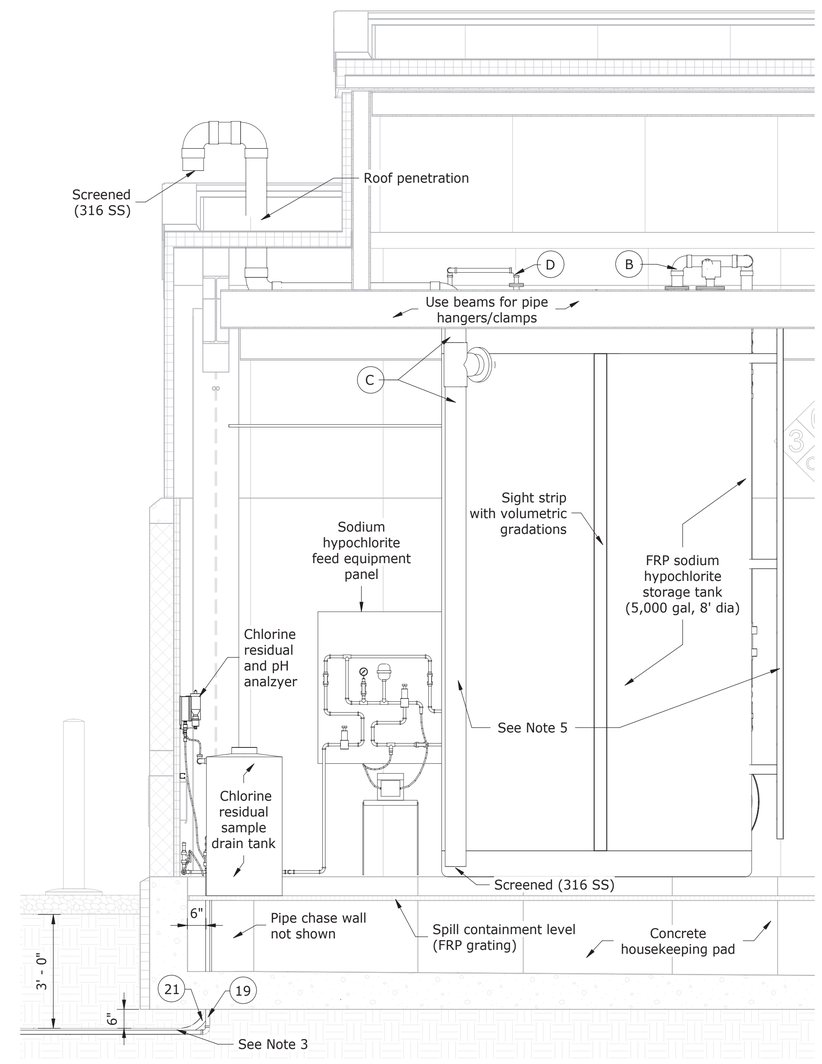

B 60473 SECTION
Scale: 1/2" = 1'-0"

NOTES

1. For P&ID drawings see (60507), (60512), and (60513).
2. Metering pump stand shown as a wall-mounted shelf. Floor-mounted pump stand also acceptable pending Government review.
3. For Lines 19, 20, 21, 22, 25, and 26, sections of pipe below the foundation wall, install each through a 4" steel carrier pipe.
4. Arrows show the direction of liquid (water or sodium hypochlorite) flow.
5. Support overflow and ladder with integrally molded support tabs.
6. All equipment shown are generic, see specifications for more detail.

ALWAYS THINK **SAFETY**

U.S. DEPARTMENT OF THE INTERIOR
BUREAU OF RECLAMATION
NAVAJO GALLUP WATER SUPPLY PROJECT
NEW MEXICO

SAN JUAN LATERAL
PUMPING PLANT NOS. 4 AND 7

DESIGNED	Anthony Kennedy, P.E.
DRAWN	Anthony Kennedy, P.E.
CHECKED	John Walp, P.E.
TECH. APPR.	Miguel Arias-Paic, P.E.
APPROVED	Scott Irvine Peer Reviewer - Water Treatment Group
DENVER, CO	2020-01-24

PUMPING PLANT NO. 4 CHLORINATION SYSTEM

SECTIONS

1695-D-60474

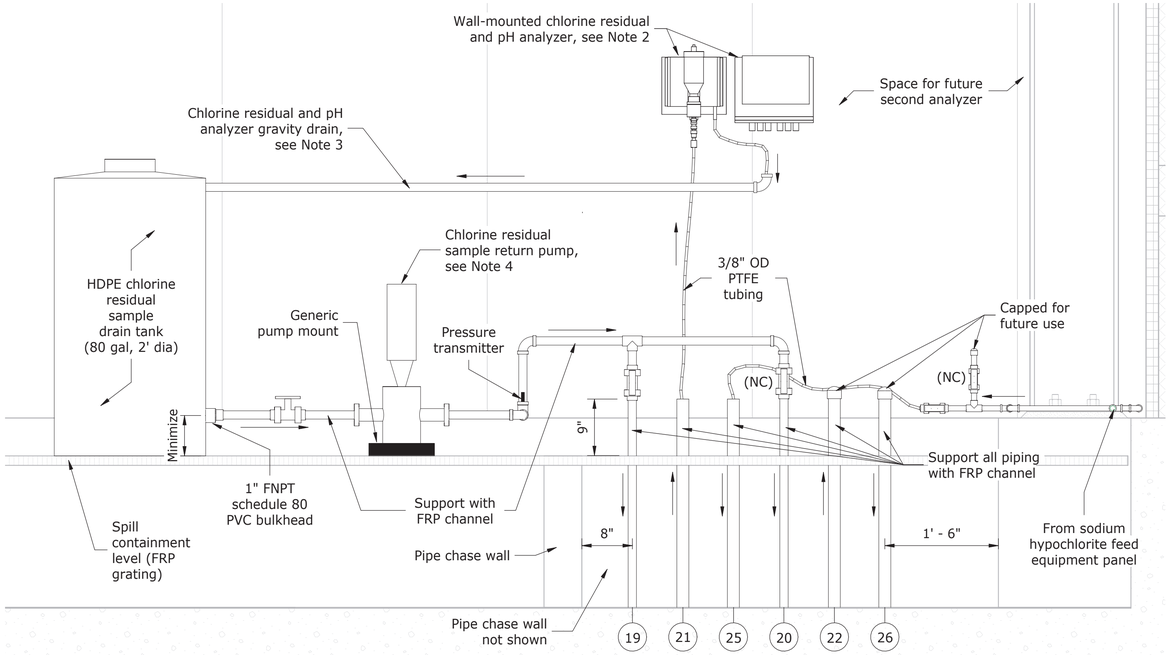

C 60473 SECTION
Scale: 1" = 1'-0"

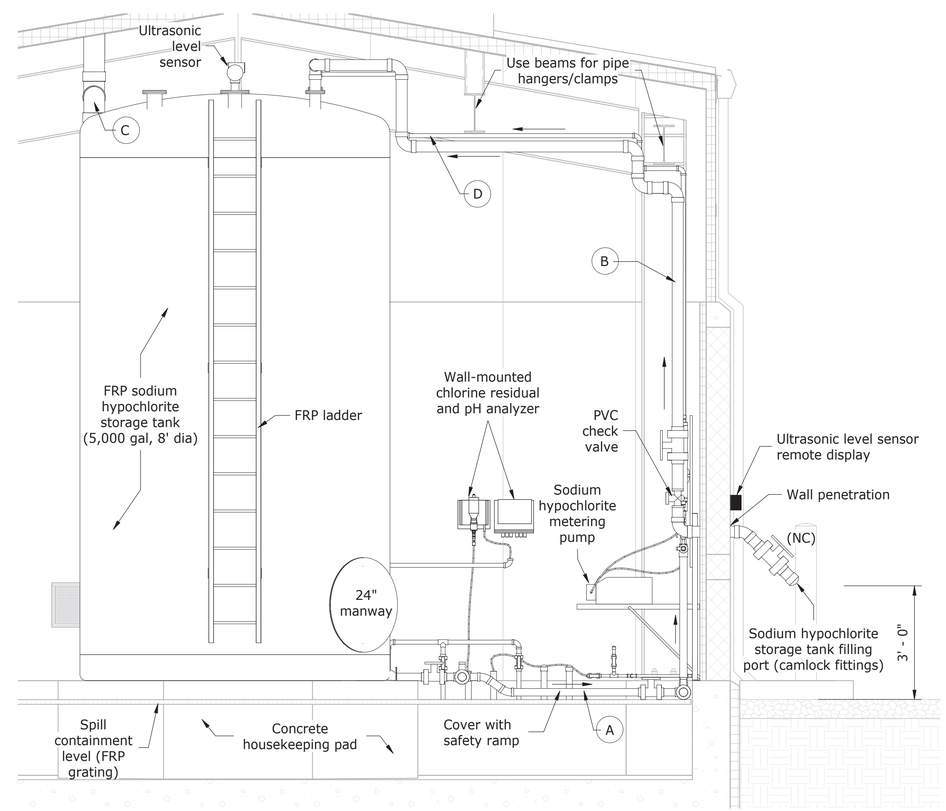

D 60473 SECTION
Scale: 1/2" = 1'-0"

NOTES

1. For P&ID drawings see (60507), (60512), and (60513).
2. Mount chlorine residual and pH analyzer ~5 ft above FRP grating (eye level).
3. 1"schedule 80 PVC gravity drain (slope=0.01).
4. Chlorine residual sample return pump operated off chlorine residual sample drain tank level switch. Mount per manufacturer recommendations.
5. Arrows show the direction of liquid (water or sodium hypochlorite) flow.
6. All equipment shown are generic, see specifications for more detail.

RECLAMATION
Managing Water in the West

ALWAYS THINK **SAFETY**

U.S. DEPARTMENT OF THE INTERIOR
BUREAU OF RECLAMATION
NAVAJO GALLUP WATER SUPPLY PROJECT
NEW MEXICO
SAN JUAN LATERAL
PUMPING PLANT NOS. 4 AND 7

DESIGNED	Anthony Kennedy, P.E.
DRAWN	Anthony Kennedy, P.E.
CHECKED	John Walp, P.E.
TECH. APPR.	Miguel Arias-Paic, P.E.
APPROVED	Scott Irvine Peer Reviewer - Water Treatment Group
DENVER, CO	2020-01-24

PUMPING PLANT NO. 4 CHLORINATION SYSTEM

SECTIONS

1695-D-60475

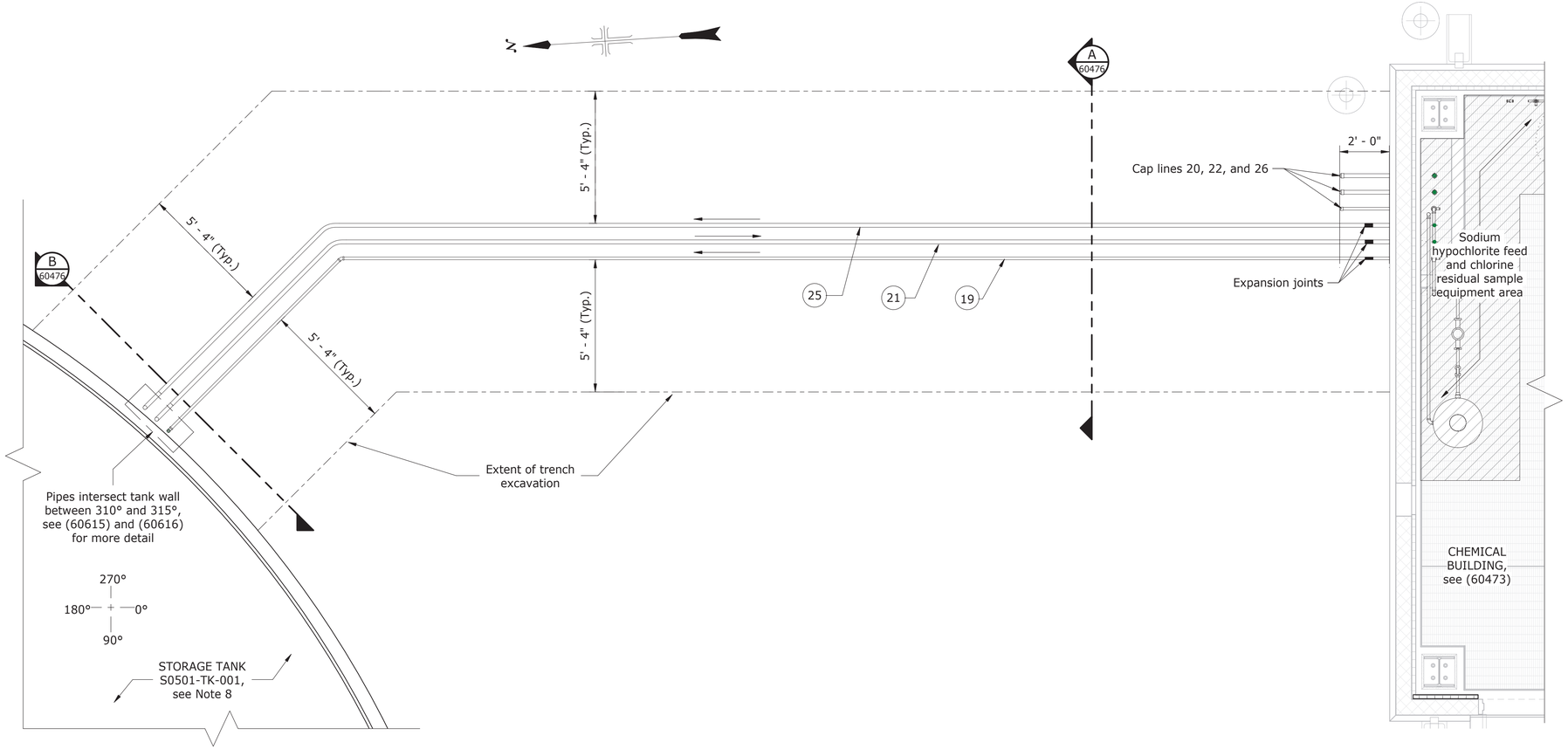

PLAN - EL. 5868.50

Scale: 3/8" = 1'-0"

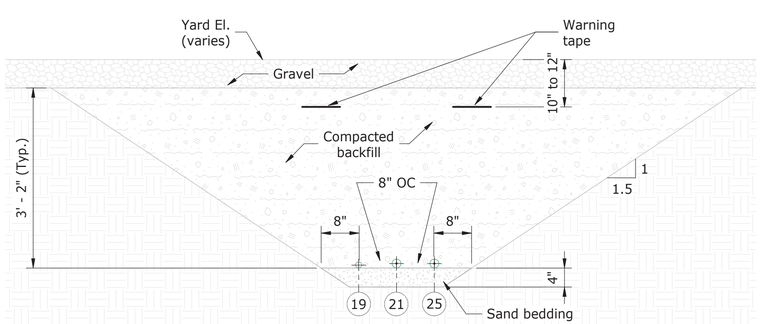

A 60476 SECTION

Scale: 3/4" = 1'-0"

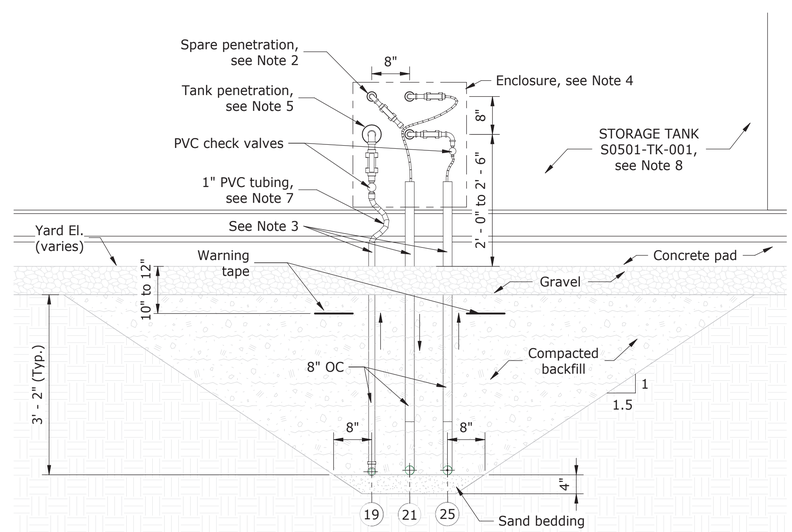

B 60476 SECTION

Scale: 3/4" = 1'-0"

NOTES

1. For P&ID drawings see (60507), (60512), and (60513).
2. Spare tank penetration for 1/2" schedule 80 PVC, valve normally closed (NC) and piping capped.
3. Insulate pipes between ground and penetrations enclosure.
4. Enclose tank penentrations, piping, tubing, and valves in insulated tank-mounted NEMA 4X enclosure, also see (60615) and (60616). Lines 6 and 8 transition from 3/8" OD PTFE tubing to 1/2" schedule 80 PVC piping inside enclosure. Mount exterior aluminum sign designating sodium hypochlorite near enclosure.
5. For tank wall penetrations detail see (60615) and (60616). See specifications for a more detailed tank wall penetration transition description.
6. Arrows show the direction of liquid (water or sodium hypochlorite) flow.
7. 1" PVC tubing to prevent pipe breakage during Storage Tank S0501-TK-001 settlement. Install as shown with room to move.
8. Storage Tank S0501-TK-001 platform and ladder not shown.

RECLAMATION
Managing Water in the West

ALWAYS THINK **SAFETY**

U.S. DEPARTMENT OF THE INTERIOR
BUREAU OF RECLAMATION
NAVAJO GALLUP WATER SUPPLY PROJECT
NEW MEXICO
SAN JUAN LATERAL
PUMPING PLANT NOS. 4 AND 7

Anthony Kennedy, P.E.
DESIGNED
Anthony Kennedy, P.E.
DRAWN
John Walp, P.E.
CHECKED
TECH. APPR. Miguel Arias-Paic, P.E.
APPROVED Scott Irvine
Peer Reviewer - Water Treatment Group

DENVER, CO 2020-01-24

PUMPING PLANT NO. 4 CHLORINATION SYSTEM

YARD PIPING - PLAN AND SECTIONS

1695-D-60476

RECLAMATION
Managing Water in the West

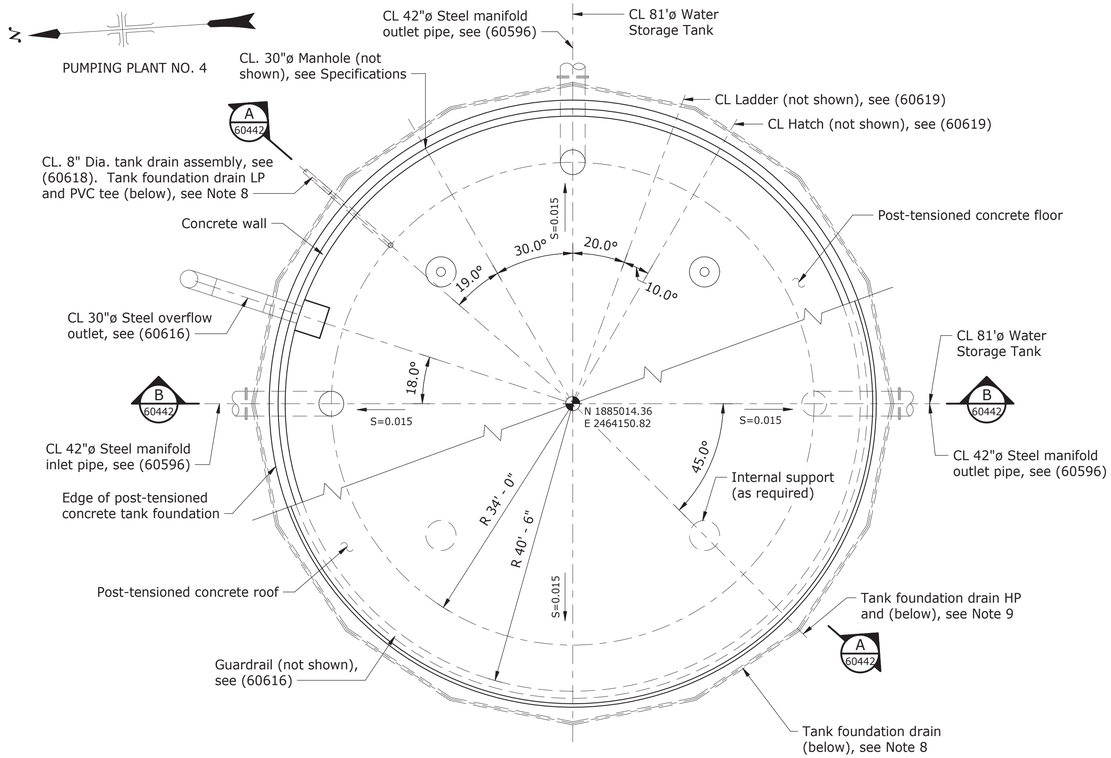

1.0-MGAL PRESTRESSED CONCRETE TANK - PLAN

Scale: 3/32" = 1'-0"

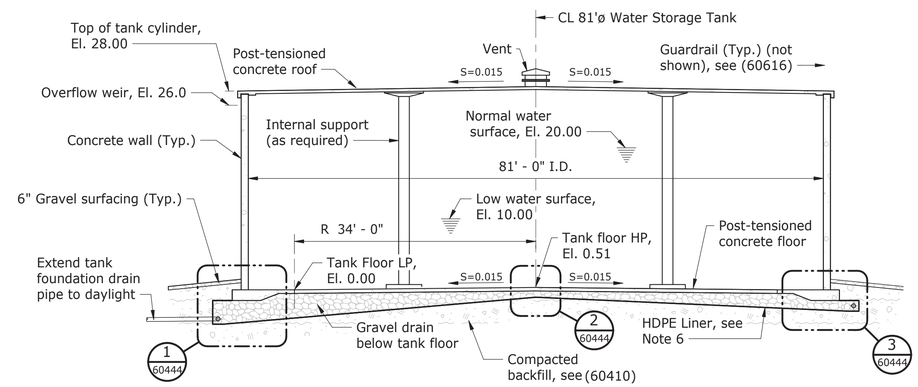

A 60442 SECTION

Scale: 3/32" = 1'-0"

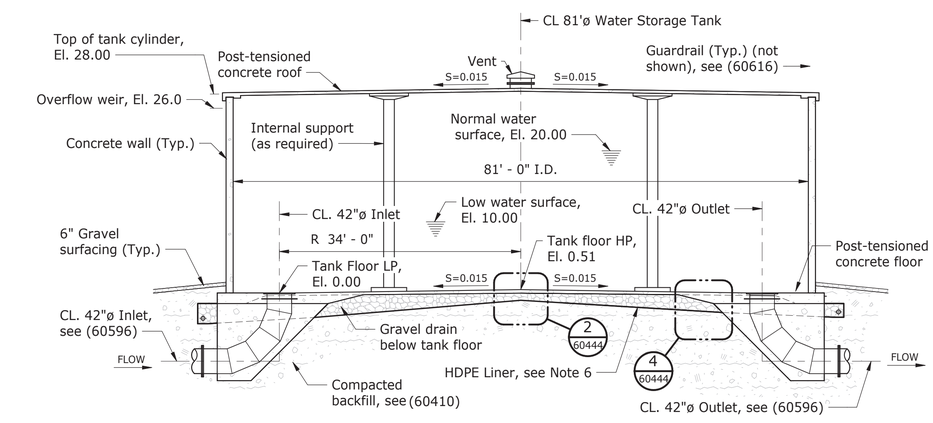

B 60442 SECTION

Scale: 3/32" = 1'-0"

PUMPING PLANT	DATUM (FT)
PUMPING PLANT NO. 4	EL. 5867.50

NOTES:
1. All elevations are based on NAVD88 vertical datum.
2. The datum elevation(s) identified in the table correspond to the El. 0.0 elevation identified on the drawing. All elevations reported on the drawings are relative to the El. 0.0 elevation unless noted otherwise.

0 10' 20'
Scale: 3/32" = 1'-0"

NOTES

1. For Structural Design Data and Loads, see (60399) and (60400).
2. Pumping Plant No. 4 control point coordinates, see (60403).
3. For Drawing Index, see (60396) and (60397).
4. For tank foundation excavation requirements, see (60410).
5. A free spanning domed concrete roof is permitted but is not shown, see Specifications.
6. Install HDPE liner with a 2% minimum slope from the center of the tank outward toward the perimeter of the tank as shown on the drawing.
7. Penetrations through the wall and floor of the concrete tank shall be Contractor-designed.
8. Slotted PVC foundation drain pipe shall be sloped at 1% around the perimeter of the foundation floor and PVC foundation drain pipe shall be sloped pipe at 1% min. away from the tank to precast concrete overflow and drain vault, see (60437).
9. See Specifications for additional tank foundation drain design requirements.

ALWAYS THINK **SAFETY**

U.S. DEPARTMENT OF THE INTERIOR
BUREAU OF RECLAMATION
NAVAJO-GALLUP WATER SUPPLY PROJECT
NEW MEXICO

SAN JUAN LATERAL
PUMPING PLANT NOS. 4 AND 7

Kevin O'Shea
DESIGNED
Kevin O'Shea
DRAWN
Brandon Jackson
CHECKED
TECH. APPR. Brandon Jackson, P.E.
APPROVED Alfred I. Bernstein
Peer Reviewer - Plant Structures Group

DENVER, CO 2020-01-24

PUMPING PLANT NO. 4
1.0-MGAL CONCRETE WATER STORAGE TANK

PLAN AND SECTIONS

1695-D-60442

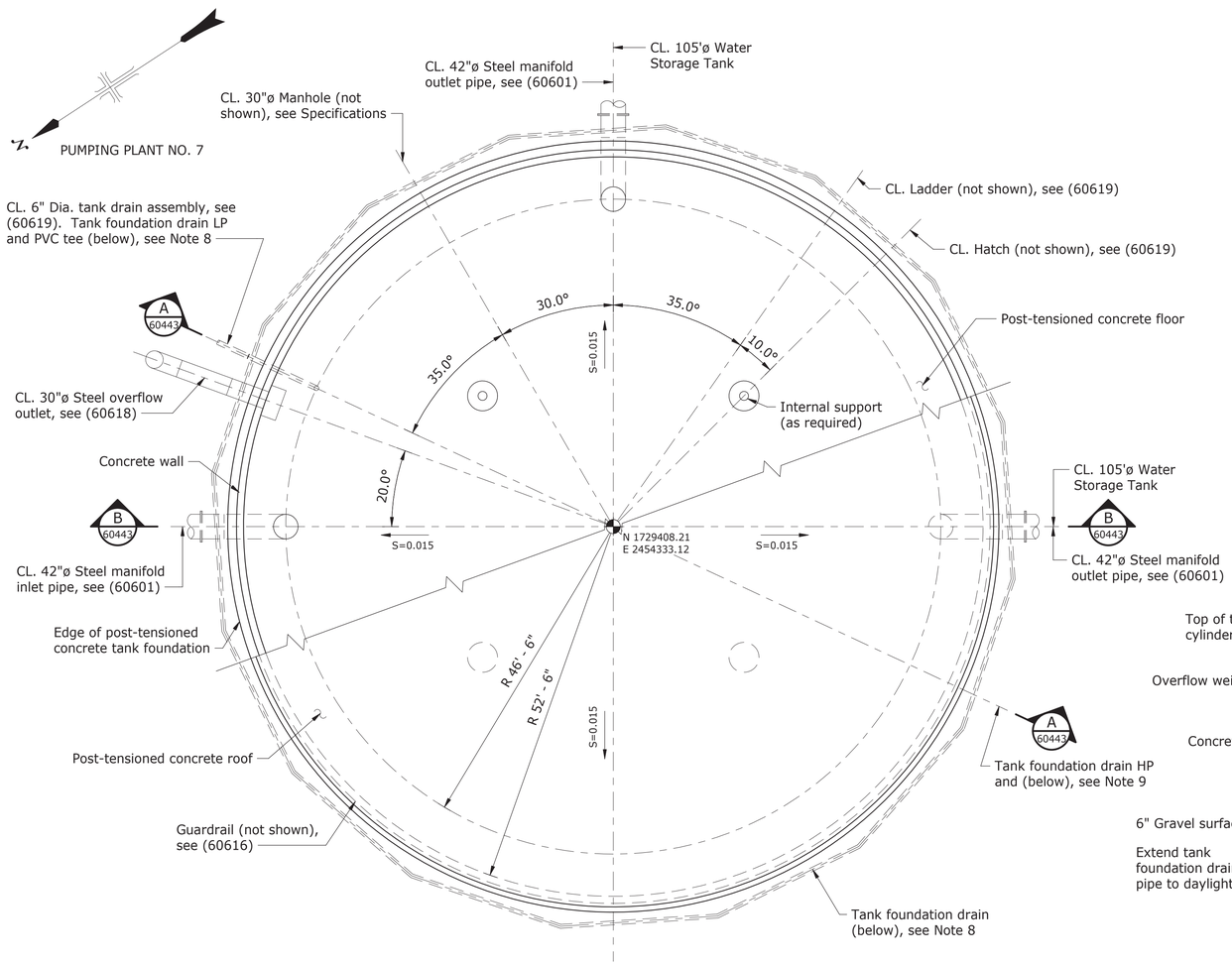

1.5-MGAL PRESTRESSED CONCRETE TANK - PLAN

Scale: 3/32" = 1'-0"

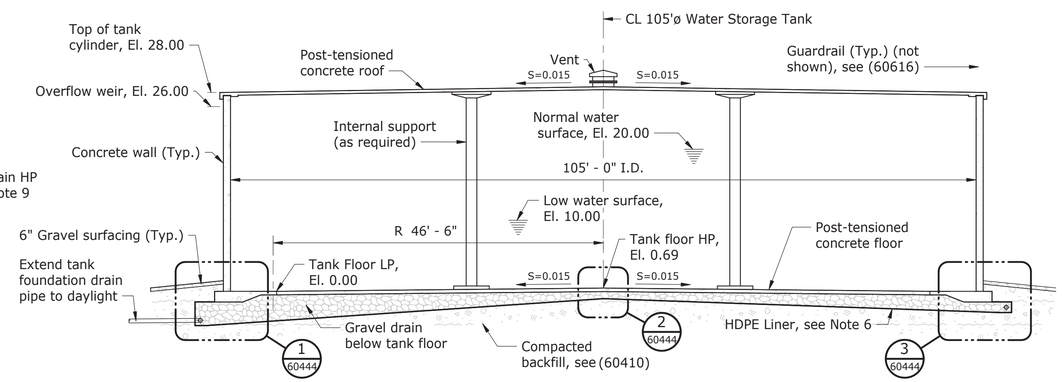

A SECTION

Scale: 3/32" = 1'-0"

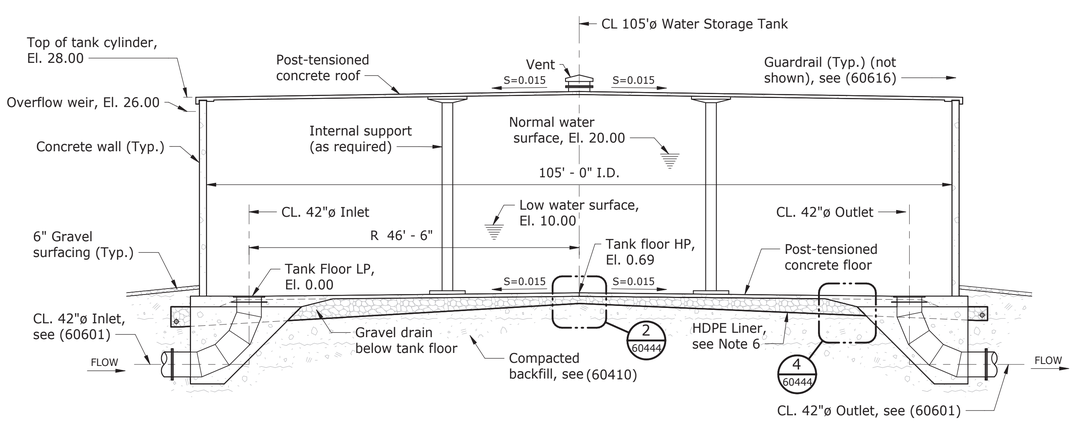

B SECTION

Scale: 3/32" = 1'-0"

PUMPING PLANT	DATUM (FT)
PUMPING PLANT NO. 7	EL. 6215.00

NOTES:
1. All elevations are based on NAVD88 vertical datum.
2. The datum elevation(s) identified in the table correspond to the El. 0.0 elevation identified on the drawing. All elevations reported on the drawings are relative to the El. 0.0 elevation unless noted otherwise.

0 10' 20'
Scale: 3/32" = 1'-0"

NOTES

1. For Structural Design Data and Loads, see (60399) and (60400).
2. Pumping Plant No. 7 control point coordinates, see (60406).
3. For Drawing Index, see (60396) and (60397).
4. For tank foundation excavation requirements, see (60410).
5. A free spanning domed concrete roof is permitted but is not shown, see Specifications.
6. Install HDPE liner with a 2% minimum slope from the center of the tank outward toward the perimeter of the tank as shown on the drawing.
7. Penetrations through the wall and floor of the concrete tank shall be Contractor-designed.
8. Slotted PVC foundation drain pipe shall be sloped at 1% around the perimeter of the foundation floor and PVC foundation drain pipe shall maintain a positive slope away from the tank to daylight.
9. See Specifications for additional tank foundation drain design requirements.

RECLAMATION
Managing Water in the West

ALWAYS THINK SAFETY

U.S. DEPARTMENT OF THE INTERIOR
BUREAU OF RECLAMATION
NAVAJO-GALLUP WATER SUPPLY PROJECT
NEW MEXICO

SAN JUAN LATERAL
PUMPING PLANT NOS. 4 AND 7

Kevin O'Shea
DESIGNED
Kevin O'Shea
DRAWN
Brandon Jackson
CHECKED
TECH. APPR. Brandon Jackson, P.E.
APPROVED Alfred I. Bernstein
Peer Reviewer - Plant Structures Group
DENVER, CO 2020-01-24

PUMPING PLANT NO. 7
1.5-MGAL CONCRETE WATER STORAGE TANK

PLAN AND SECTIONS

1695-D-60443

RECLAMATION
Managing Water in the West

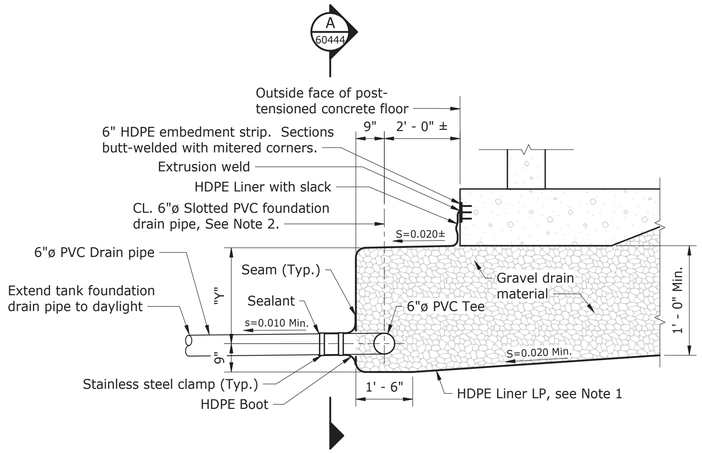

1 60442 DETAIL - LOW POINT OF TANK FOUNDATION DRAIN PIPE
NTS

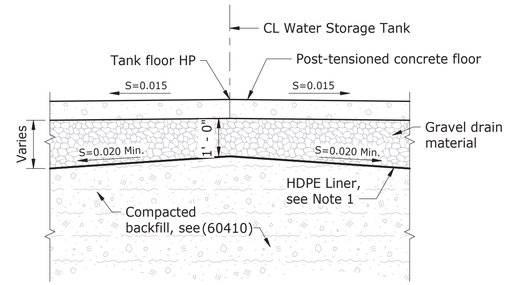

2 60442 DETAIL - TANK FOUNDATION DRAIN AT TANK CENTER
NTS

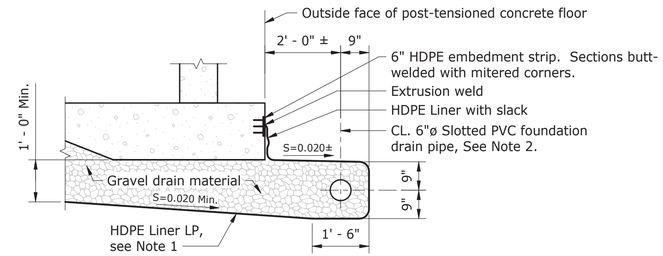

3 60442 DETAIL - HIGH POINT OF TANK FOUNDATION DRAIN PIPE
NTS

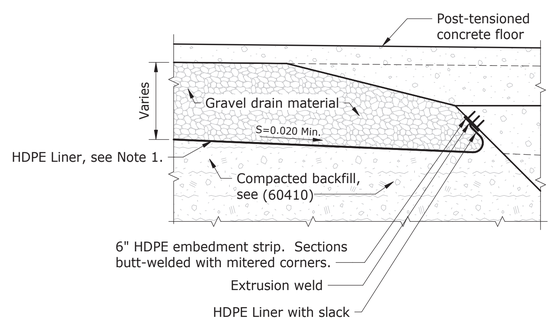

4 60442 DETAIL - TANK FOUNDATION DRAIN AT ENCASEMENT
NTS

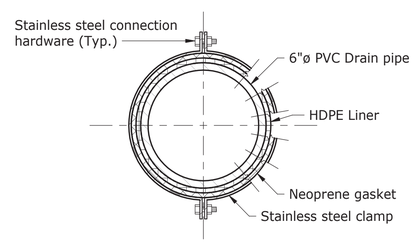

A 60444 SECTION - CLAMPED CONNECTION
NTS

NOTES

1. Install HDPE liner with a 2% minimum slope from the center of the tank outward toward the perimeter of the tank as shown on the drawing.
2. Slotted PVC foundation drain pipe shall be sloped at 1% around the perimeter of the foundation.
3. "Y" Denotes an approximate dimension which is to be determined by the Contractor based on design requirements for the tank foundation drain.
4. See Specifications for additional tank foundation drain design requirements.

ALWAYS THINK **SAFETY**

U.S. DEPARTMENT OF THE INTERIOR
BUREAU OF RECLAMATION
NAVAJO-GALLUP WATER SUPPLY PROJECT
NEW MEXICO
SAN JUAN LATERAL
PUMPING PLANT NOS. 4 AND 7

Kevin O'Shea
DESIGNED
Kevin O'Shea
DRAWN
Brandon Jackson
CHECKED
TECH. APPR. Brandon Jackson, P.E.
APPROVED Alfred I. Bernstein
Peer Reviewer - Plant Structures Group

DENVER, CO 2020-01-24

CONCRETE WATER STORAGE TANK FOUNDATION DRAIN

SECTIONS AND DETAILS

1695-D-60444

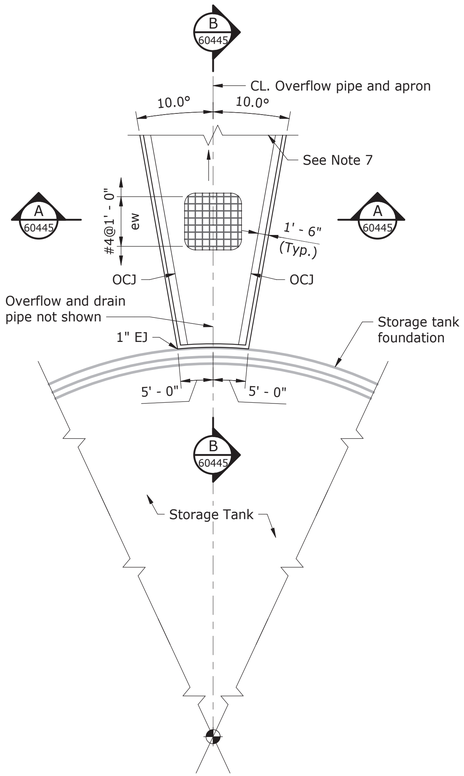

PLAN - TANK OVERFLOW AND DRAIN APRON

Scale: 3/32" = 1'-0"

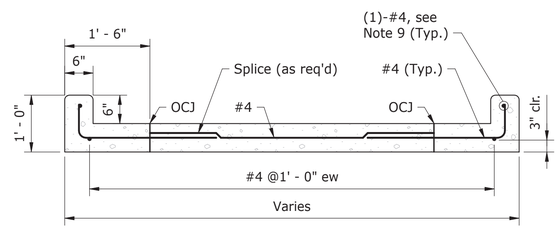

A SECTION

Scale: 3/4" = 1'-0"

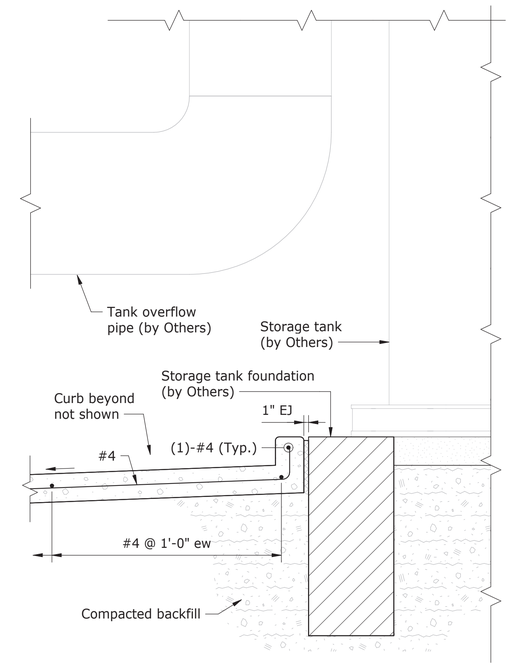

B SECTION

Scale: 3/4" = 1'-0"

NOTES

1. For Structural Design Data and Loads, see (60399) and (60400).
2. For Drawing Index, see (60396) and (60397).
3. For concrete outline general notes, see (60414).
4. For reinforcement design general notes, see (60418).
5. For locations of Pumping Plant No. 7 features, see (60406).
6. For excavation and backfill requirements, see (60410).
7. Overflow apron shall extend from storage tank foundation to the tank yard extent as shown on (60406).
8. Provide control joints in the concrete apron at a maximum 15-foot center-to-center spacing.
9. Reinforcement shall be centered in curb.
10. Slope apron to follow finish grade of site.

0 10' 20'
Scale: 3/32" = 1'-0"

0 1' 2' 3'
Scale: 3/4" = 1'-0"

RECLAMATION
Managing Water in the West

ALWAYS THINK **SAFETY**

U.S. DEPARTMENT OF THE INTERIOR
BUREAU OF RECLAMATION

NAVAJO-GALLUP WATER SUPPLY PROJECT
NEW MEXICO

SAN JUAN LATERAL
PUMPING PLANT NOS. 4 AND 7

Kevin O'Shea
DESIGNED
Kevin O'Shea
DRAWN
Brandon Jackson
CHECKED
TECH. APPR. Brandon Jackson, P.E.
APPROVED Alfred I. Bernstein
Peer Reviewer - Plant Structures Group

DENVER, CO 2020-01-24

PUMPING PLANT NO. 7 TANK OVERFLOW AND DRAIN APRON

PLAN AND SECTIONS

1695-D-60445

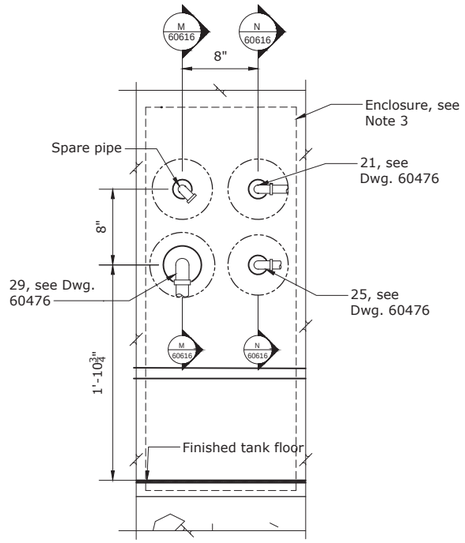

X SECTION
1.5"=1'

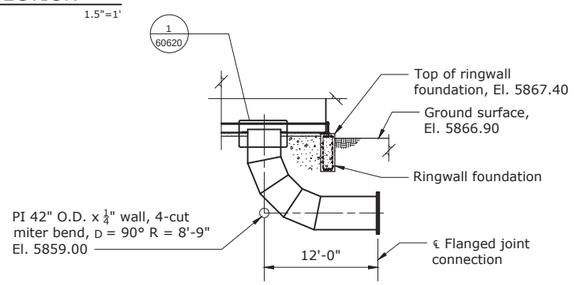

Y SECTION
1/8"=1'

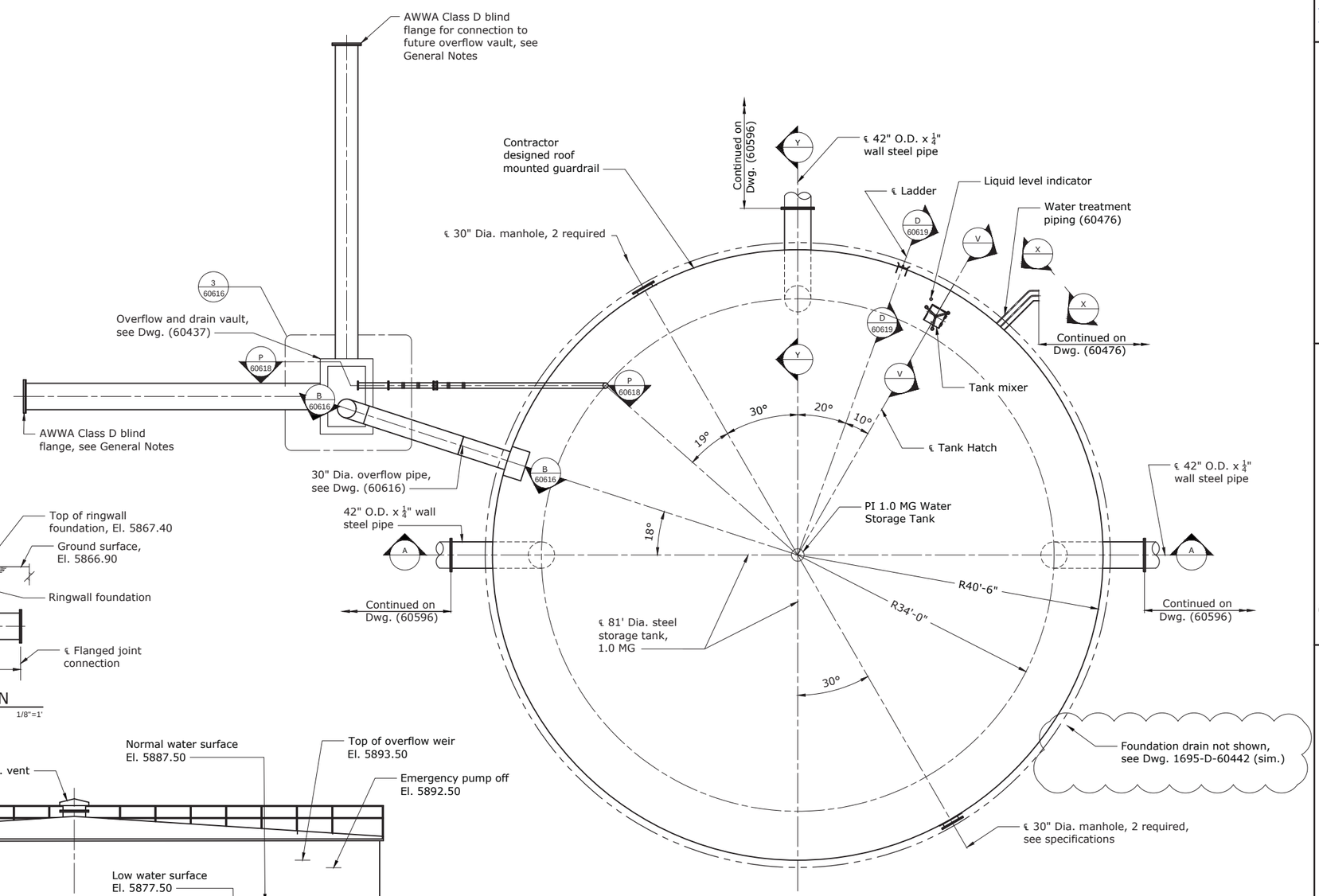

PLAN

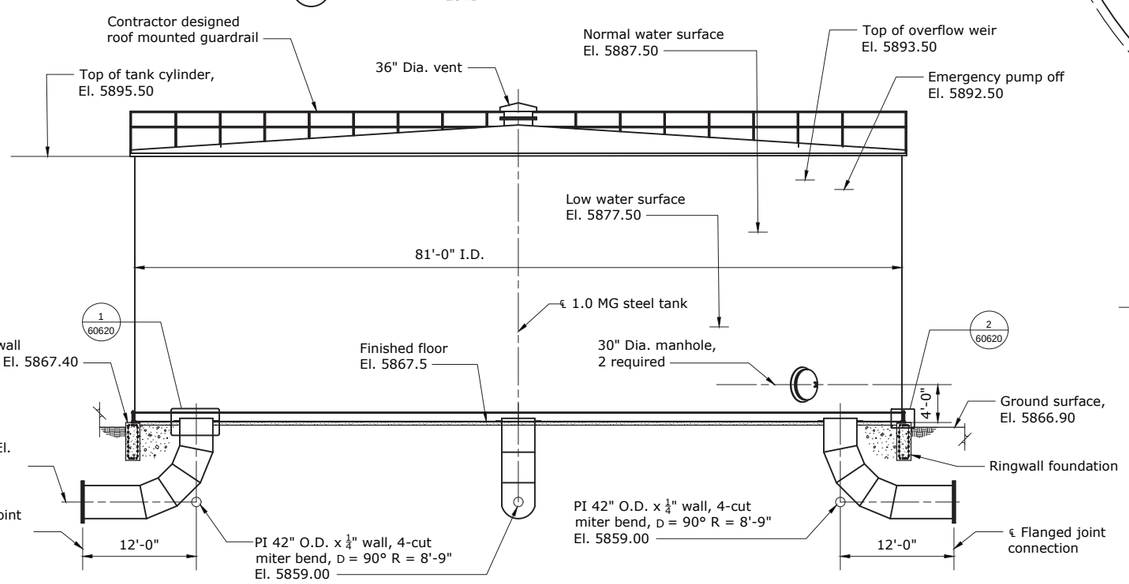

A SECTION
1/8"=1'

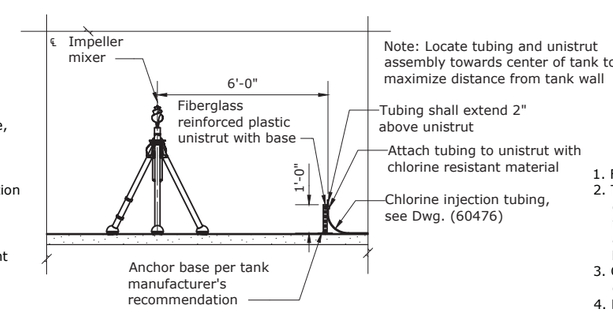

V SECTION
3/8"=1'

Note: Locate tubing and unistrut assembly towards center of tank to maximize distance from tank wall

NOTES

1. For General Notes, see Dwg. (60595).
2. Tank anchors and anchor welds to be determined by tank manufacturer. Use template for anchor bolt spacing to verify correct location of anchors subject to Government approval. See Detail 4 on Dwg. (60620).
3. Contractor to determine size of NEMA 4x approved enclosure.
4. Details are shown for welded steel tank option. Appurtenances to be contractor designed for bolted steel and concrete tank options.

RECLAMATION
Managing Water in the West

ALWAYS THINK SAFETY

U.S. DEPARTMENT OF THE INTERIOR
BUREAU OF RECLAMATION
NAVAJO-GALLUP WATER SUPPLY PROJECT
NEW MEXICO

SAN JUAN LATERAL
PUMPING PLANT NOS. 4 AND 7

REV NO	DATE	DESCRIPTION	BY
2	2020-06-25	ADDED TANK FOUNDATION DRAIN	Schlundt, Kent C P.E.
1	2020-01-21	GENERAL REVISIONS	Stephen, Ryan D P.E.

Kent Schlundt
DESIGNED
Rex Schlosser
DRAWN
Kent Schlundt
CHECKED
Adams, Lucas P.E.
TECH. APPR.
Hummel, Terry L
APPROVED
ADMIN APPROVAL - Mgr Hvdr Equip

DENVER, CO 2018-08-23

PUMPING PLANT NO. 4
1.0-MGAL WELDED STEEL
WATER STORAGE TANK

PLAN AND SECTIONS

1695-D-60615

SHEET 1

Released

DATE AND TIME PLOTTED Not Plotted
PLOTTED BY Not Plotted
CAD SYSTEM AUTOCAD
CAD FILENAME UNKNOWN

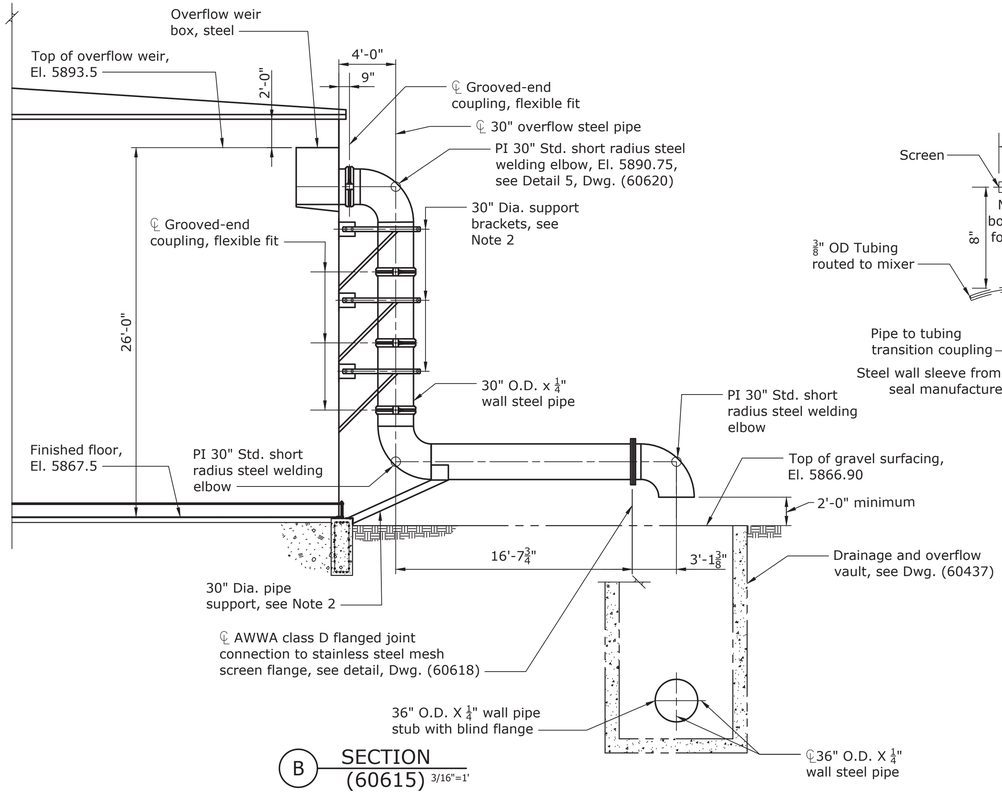

B SECTION (60615) 3/16"=1'

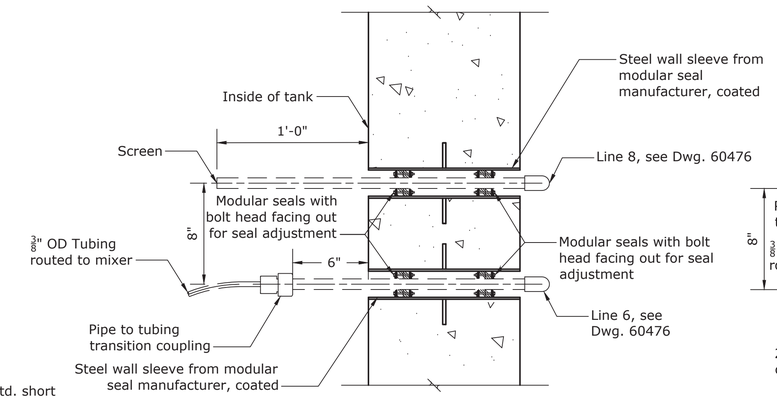

CONCRETE TANK

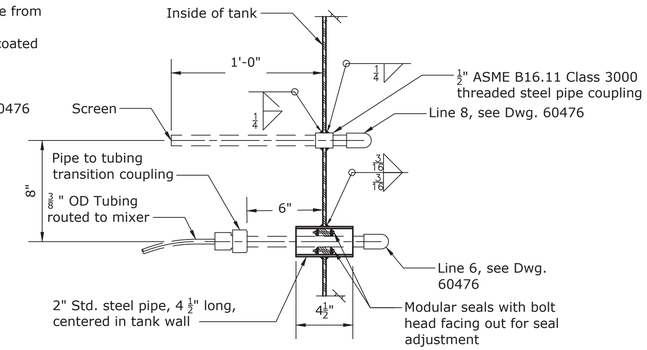

STEEL TANK (see Note 3)

N SECTION (60615) 2"=1'

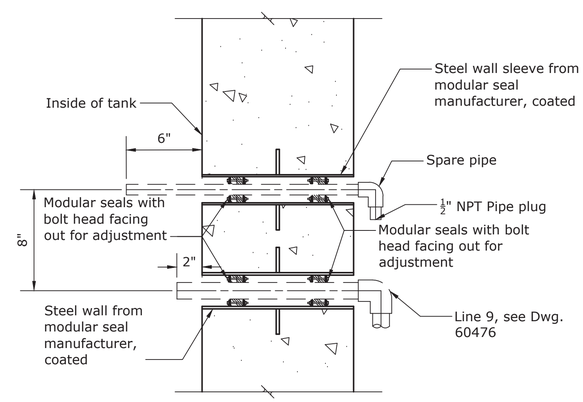

CONCRETE TANK

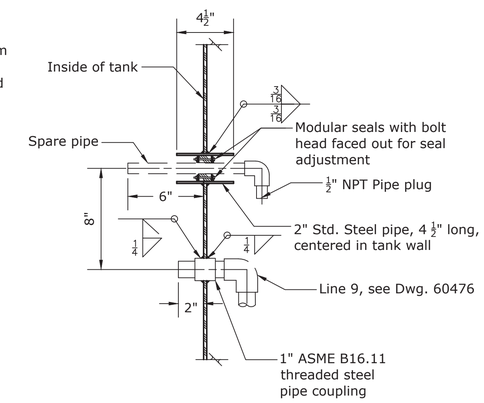

STEEL TANK (see Note 3)

M SECTION (60615) 2"=1'

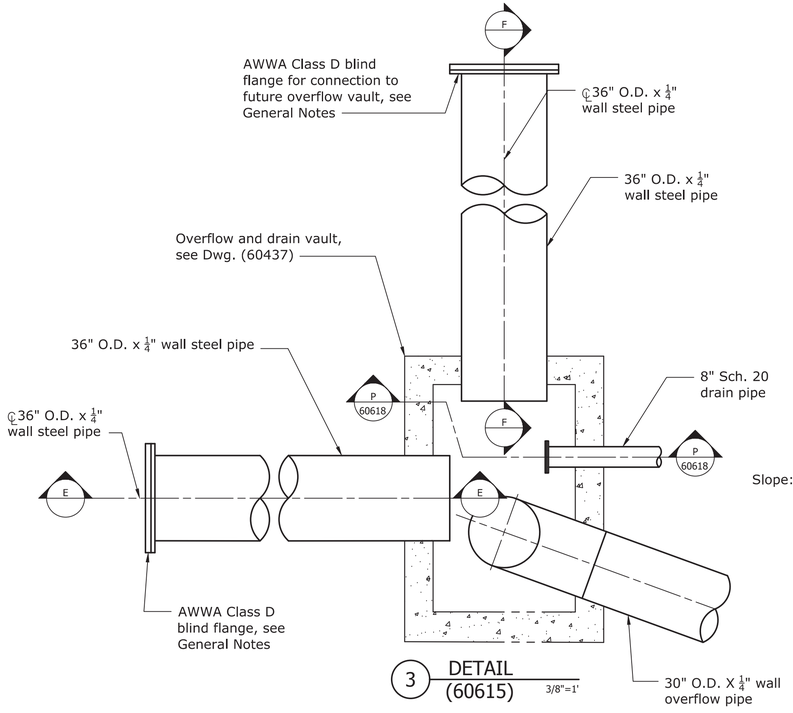

3 DETAIL (60615) 3/8"=1'

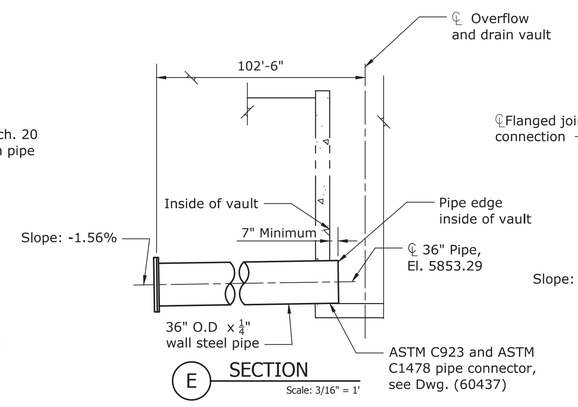

E SECTION Scale: 3/16" = 1'

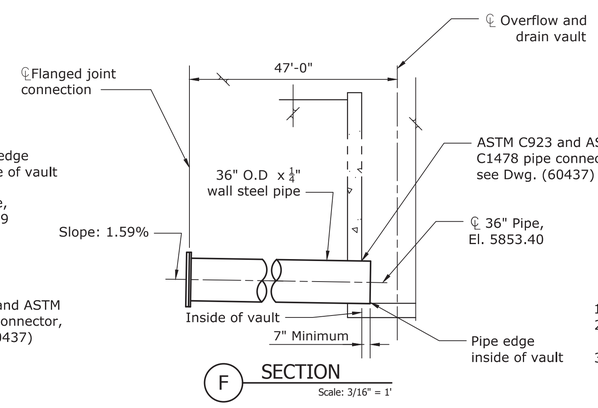

F SECTION Scale: 3/16" = 1'

NOTES

1. For General Notes, see Dwg. (60595).
2. Overflow weir box and overflow pipe supports are conceptual only. Contractor to design.
3. Contractor to design penetrations for bolted steel tank.

RECLAMATION
Managing Water in the West

ALWAYS THINK SAFETY

U.S. DEPARTMENT OF THE INTERIOR
BUREAU OF RECLAMATION
NAVAJO-GALLUP WATER SUPPLY PROJECT
NEW MEXICO

SAN JUAN LATERAL

PUMPING PLANT NOS. 4 AND 7

Kent Schlundt — DESIGNED
Rex Schlosser — DRAWN
Kent Schlundt — CHECKED
Adams, Lucas P.E. — TECH. APPR.
Hummel, Terry L — APPROVED
ADMIN APPROVAL - Mgr Hydr Equip

DENVER, CO 2018-08-23

PUMPING PLANT NO. 4 WATER STORAGE TANK - OVERFLOW PIPE

SECTIONS AND DETAILS

1695-D-60616

SHEET 2

Released

DATE AND TIME PLOTTED Not Plotted
PLOTTED BY Not Plotted
CAD SYSTEM AUTOCAD
CAD FILENAME UNKNOWN

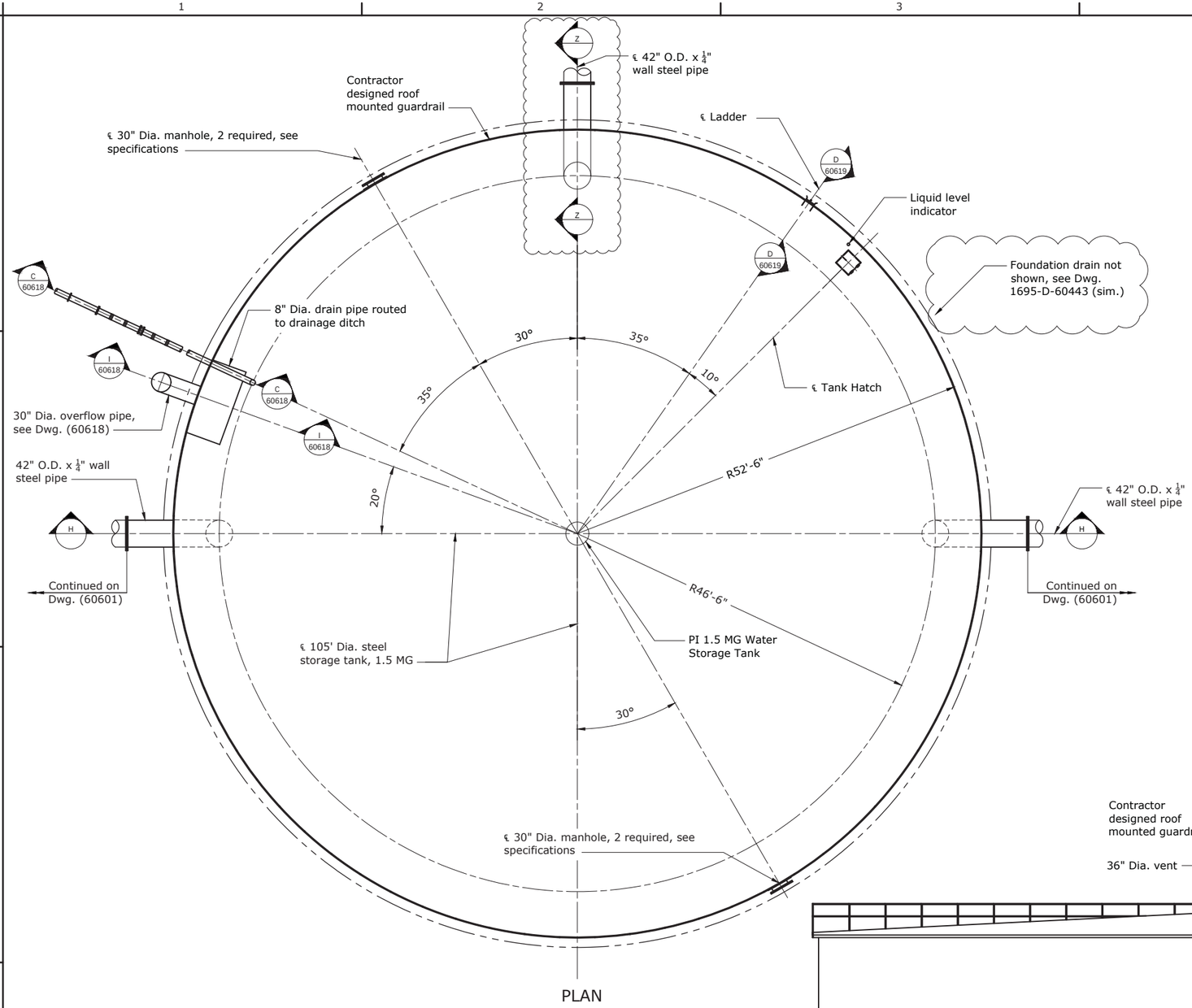

PLAN

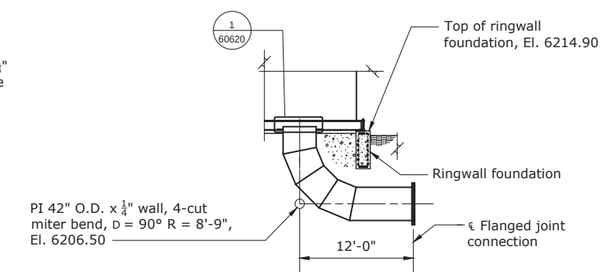

Z SECTION 1/8"=1'

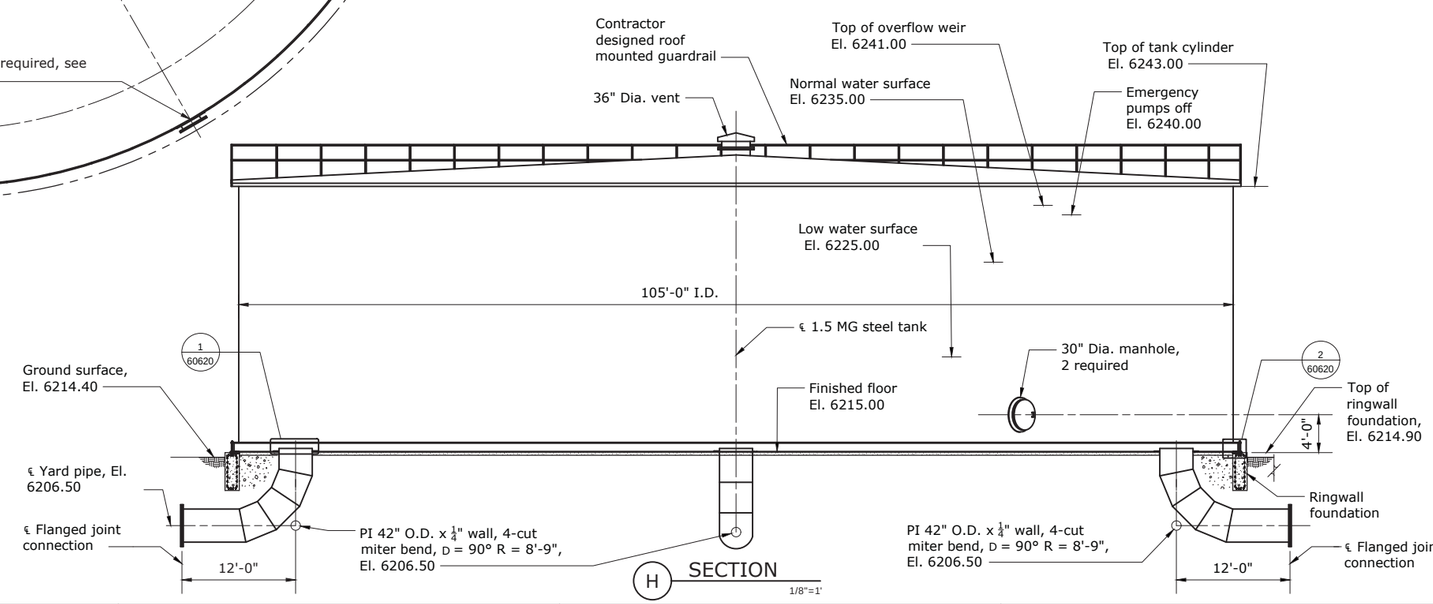

H SECTION 1/8"=1'

NOTES

1. For General Notes, see Dwg. (60595)
2. Tank anchors and anchor welds to be determined by tank manufacturer. Use template for anchor bolt spacing to verify correct location of anchors subject to Government approval. See Detail 4 on Dwg. (60620).

RECLAMATION
Managing Water in the West

ALWAYS THINK SAFETY

U.S. DEPARTMENT OF THE INTERIOR
BUREAU OF RECLAMATION
NAVAJO-GALLUP WATER SUPPLY PROJECT
NEW MEXICO

SAN JUAN LATERAL
PUMPING PLANT NOS. 4 AND 7

REV NO			
2	2020-08-25 Schlundt, Kent C P.E.	D	ADDED TANK FOUNDATION DRAWI
1	2020-01-27 Stephen, Ryan D P.E.	D	GENERAL REVISIONS

Released

DATE AND TIME PLOTTED Not Plotted
PLOTTED BY Not Plotted
CAD SYSTEM AUTOCAD
CAD FILENAME UNKNOWN

Kent Schlundt
DESIGNED
Rex Schlosser
DRAWN
Kent Schlundt
CHECKED
Adams, Lucas P.E.
TECH. APPR.
Hummel, Terry L
APPROVED
ADMIN APPROVAL - Mgr Hydr Equip

DENVER, CO 2018-08-23

PUMPING PLANT NO. 7
1.5-MGAL WELDED STEEL WATER STORAGE TANK

PLAN AND SECTION

1695-D-60617

SHEET 3

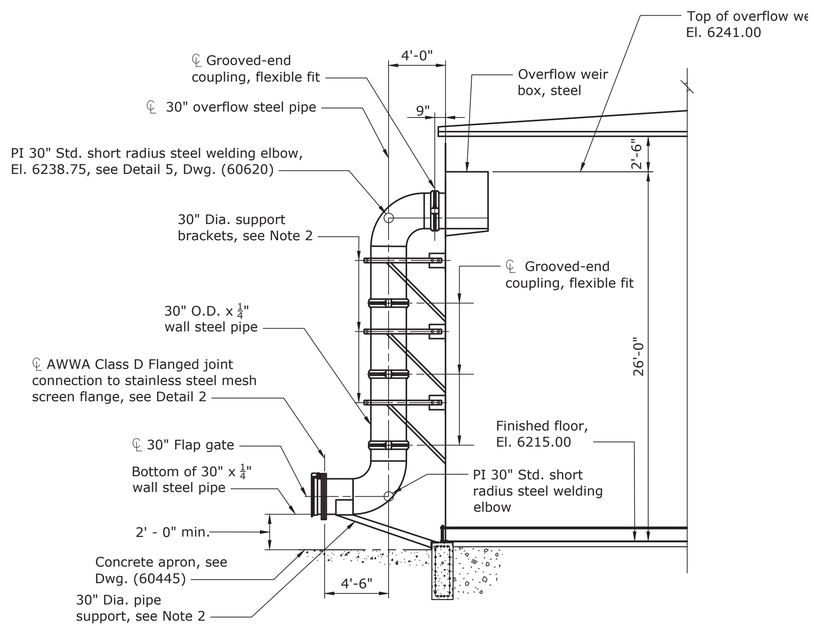

I SECTION (60617) 3/16"=1'

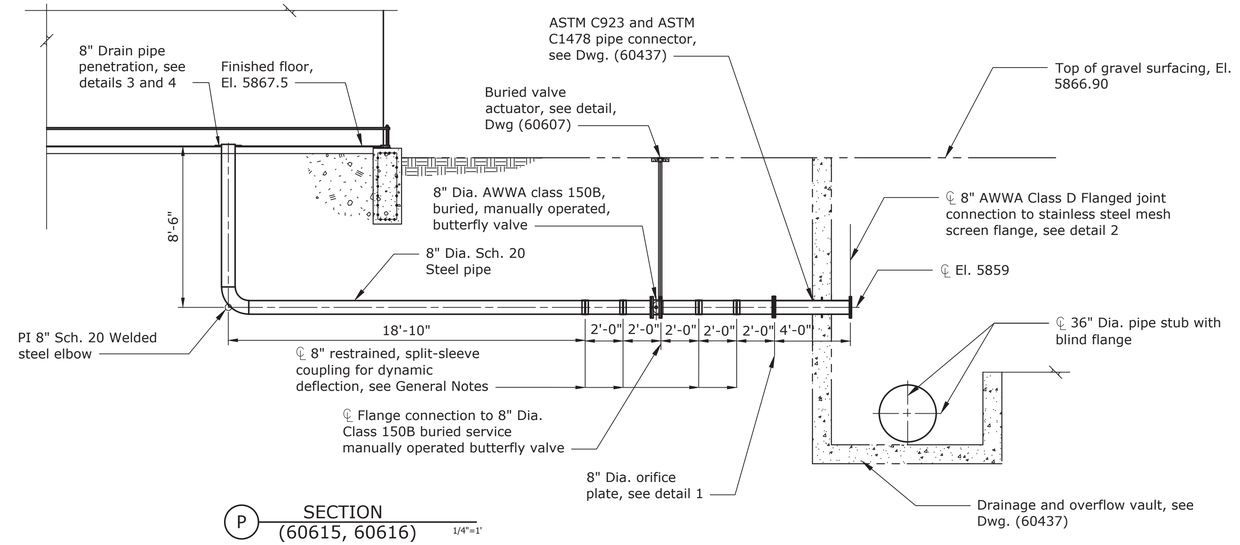

P SECTION (60615, 60616) 1/4"=1'

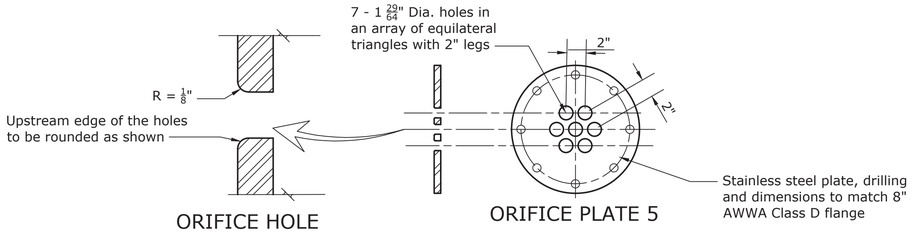

1 DETAIL 1-1/2"=1'

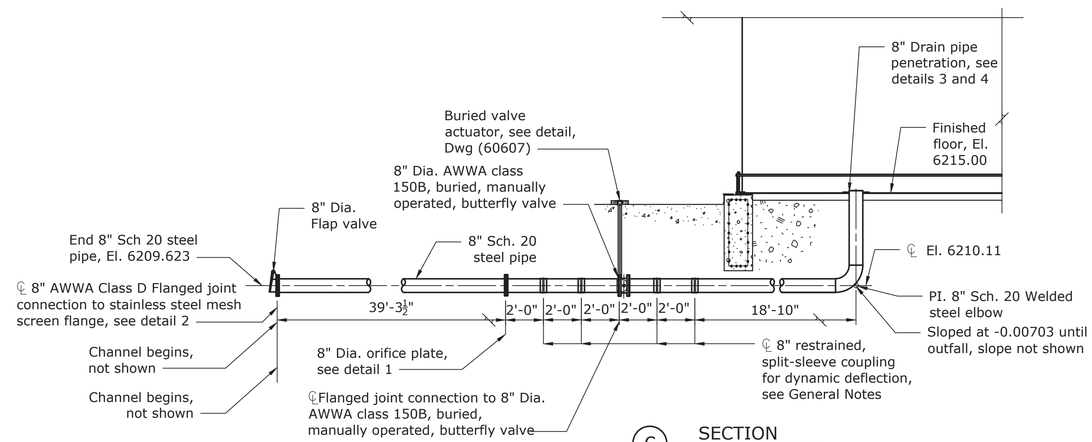

C SECTION (60617) 1/4"=1'

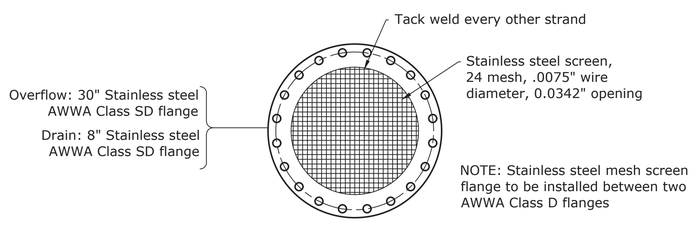

2 DETAIL (60616) 1"=1'

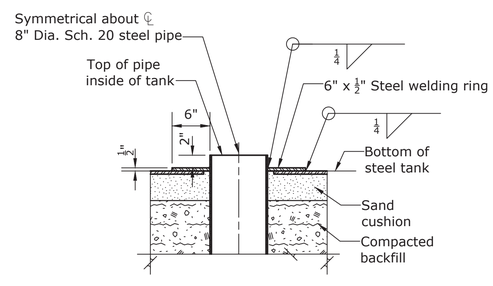

3 DETAIL Steel tank 1"=1'

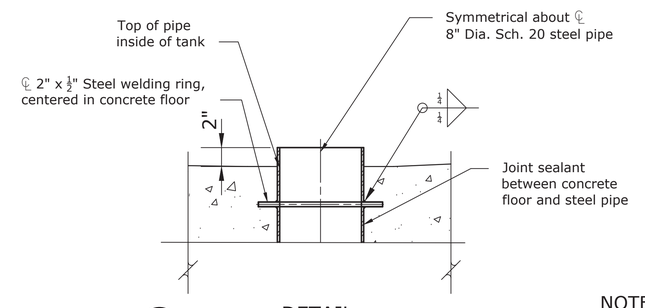

4 DETAIL Concrete and bolted steel tank 1-1/2"=1'

NOTES

1. For General Notes, see Dwg. (60595)
2. Overflow weir box and overflow pipe supports are conceptual only. Contractor to design.

RECLAMATION
Managing Water in the West

ALWAYS THINK SAFETY

U.S. DEPARTMENT OF THE INTERIOR
BUREAU OF RECLAMATION
NAVAJO-GALLUP WATER SUPPLY PROJECT
NEW MEXICO

SAN JUAN LATERAL

PUMPING PLANT NOS. 4 AND 7

Kent Schlundt — DESIGNED
Rex Schlosser — DRAWN
Kent Schlundt — CHECKED
Adams, Lucas P.E. — TECH. APPR.
Hummel, Terry L — APPROVED
ADMIN APPROVAL - Mgr Hydr Equip

DENVER, CO 2018-08-23

WELDED STEEL TANK

SECTIONS AND DETAILS

1695-D-60618

SHEET 4

Released

DATE AND TIME PLOTTED Not Plotted
PLOTTED BY Not Plotted

CAD SYSTEM AUTOCAD
CAD FILENAME UNKNOWN

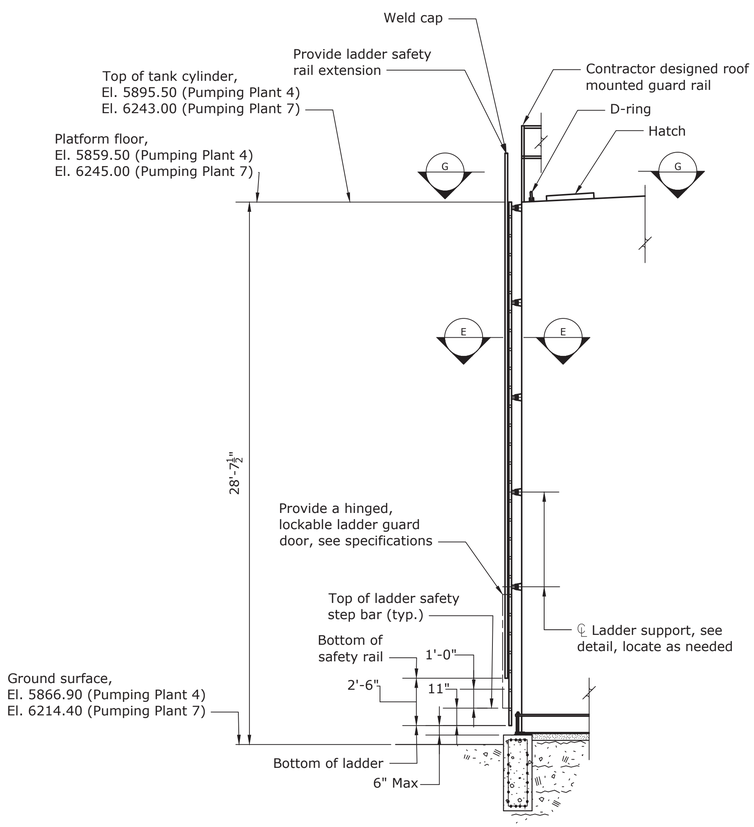

D SECTION (60615, 60617) 1/4"=1'

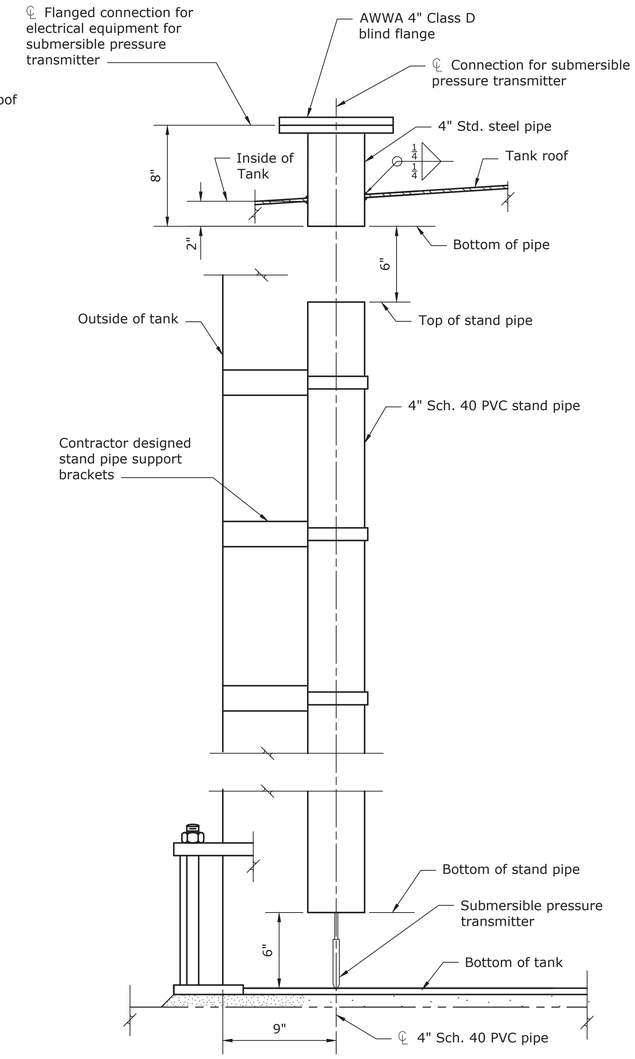

Y SECTION 2"=1'

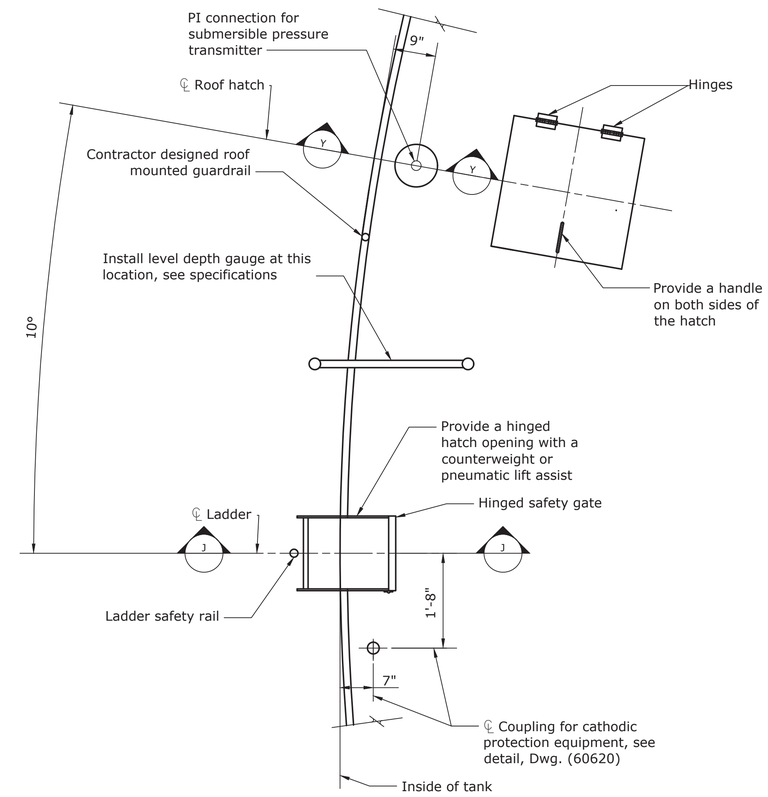

G SECTION 3/4"=1'

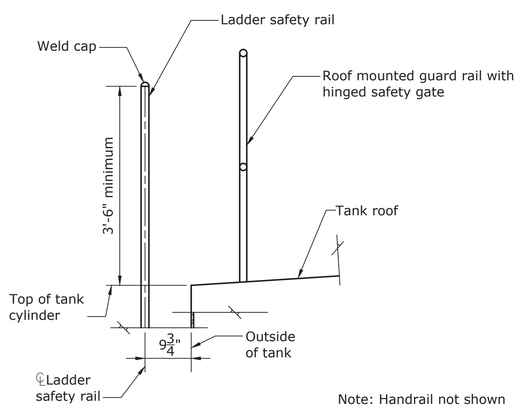

Note: Handrail not shown

J SECTION

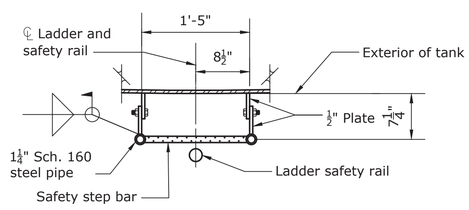

E SECTION 1 1/2" = 1'

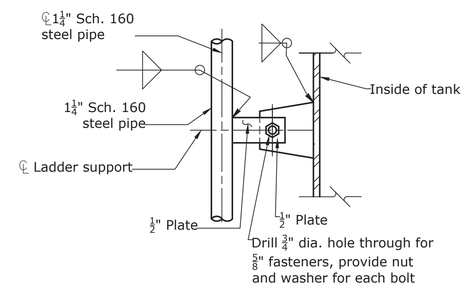

LADDER SUPPORT

NOTES

1. For General Notes, see Dwg. (60595).
2. Contractor to design ladder and ladder supports. Supports shown are conceptual only. See specifications.
3. Tank hatches and other openings shall be water and light tight with the hatch lip 4 inches above the tank roof.

RECLAMATION
Managing Water in the West

ALWAYS THINK SAFETY

U.S. DEPARTMENT OF THE INTERIOR
BUREAU OF RECLAMATION
NAVAJO-GALLUP WATER SUPPLY PROJECT
NEW MEXICO

SAN JUAN LATERAL
PUMPING PLANT NOS. 4 AND 7

Kent Schlundt — DESIGNED
Rex Schlosser — DRAWN
Kent Schlundt — CHECKED
Adams, Lucas P.E. — TECH. APPR.
Hummel, Terry L — APPROVED
ADMIN APPROVAL - Mgr Hydr Equip

DENVER, CO 2018-08-23

WELDED STEEL TANK

SECTIONS AND DETAIL

1695-D-60619

SHEET 5

Released

DATE AND TIME PLOTTED Not Plotted
PLOTTED BY Not Plotted

CAD SYSTEM AUTOCAD
CAD FILENAME UNKNOWN

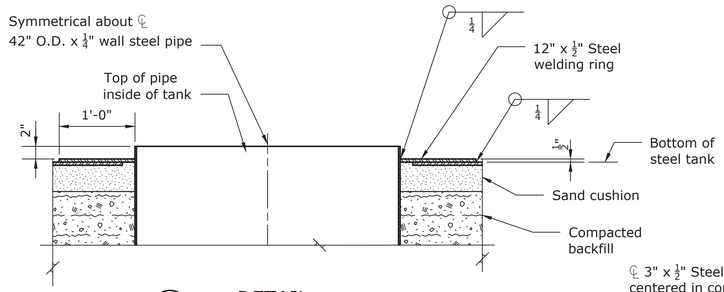

1 DETAIL (60615, 60617) 1"=1'

(Welded Steel tank, for Bolted Steel tank and Concrete tank, see Detail 4)

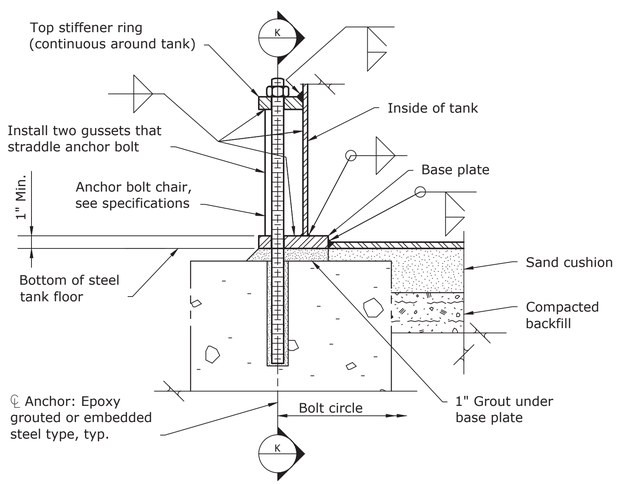

2 DETAIL (60615, 60617) 2"=1'

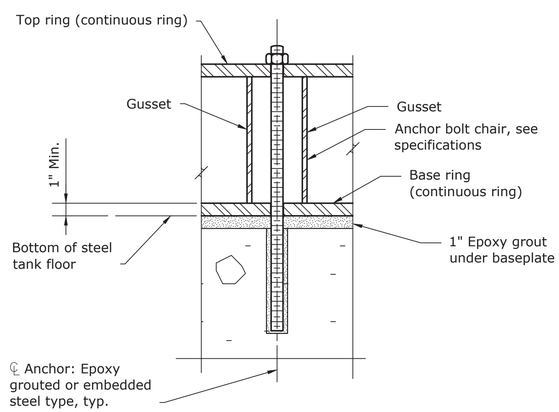

K SECTION 2"=1'

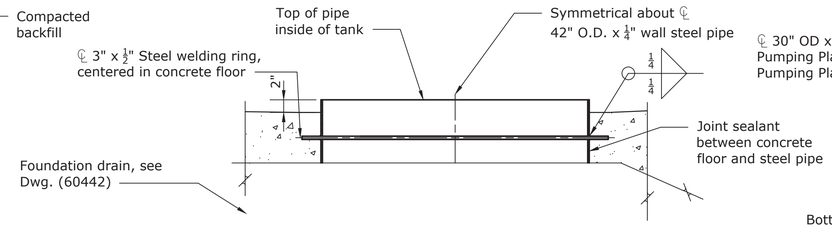

4 DETAIL (Bolted Steel tank and Concrete tank) 1"=1'

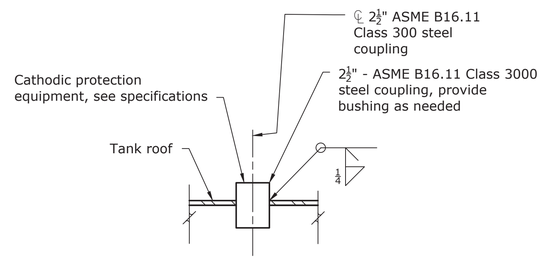

CATHODIC PROTECTION (60619)

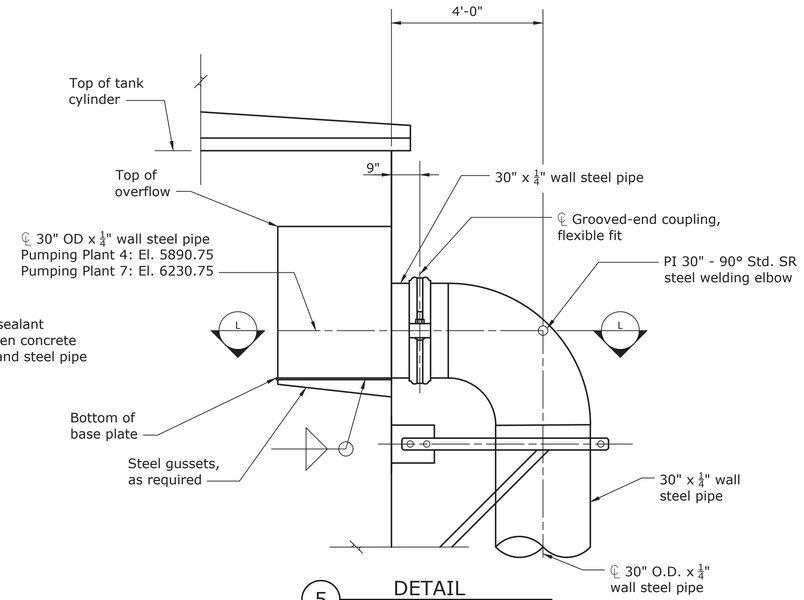

5 DETAIL (60616, 60618) 1/2"=1'

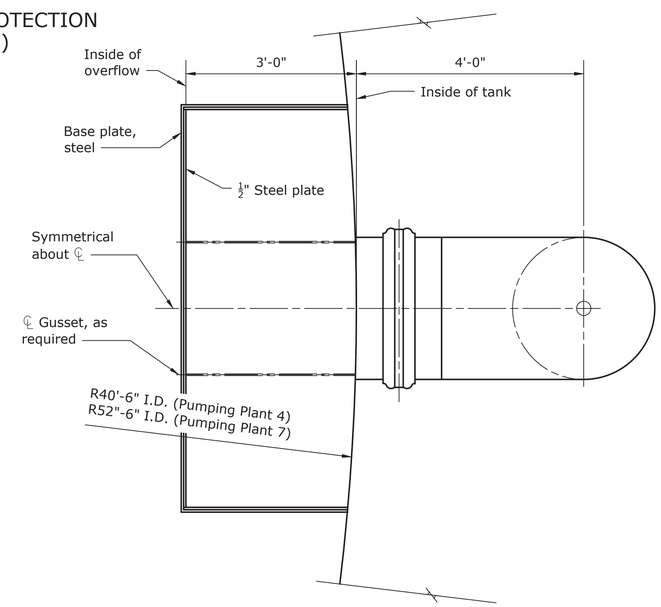

L SECTION 3/4"=1'

NOTES

1. For General Notes, see Dwg. (60595).
2. Overflow weir box shown is conceptual only. Contractor to design overflow weir box for welded steel tank, bolted steel tank, and concrete tank.
3. Tank hatches and other openings shall be water and light tight with the hatch lip 4 inches above the tank roof.
4. Tank anchors and anchor welds to be determined by tank manufacturer. Use template for anchor bolt spacing to verify correct location of anchors subject to Government approval. See Detail 2.

RECLAMATION
Managing Water in the West

ALWAYS THINK SAFETY

U.S. DEPARTMENT OF THE INTERIOR
BUREAU OF RECLAMATION
NAVAJO-GALLUP WATER SUPPLY PROJECT
NEW MEXICO

SAN JUAN LATERAL

PUMPING PLANT NOS. 4 AND 7

Kent Schlundt
DESIGNED
Rex Schlosser
DRAWN
Kent Schlundt
CHECKED
Adams, Lucas P.E.
TECH. APPR.
Hummel, Terry L
APPROVED
ADMIN APPROVAL - Mgr Hydr Equip

DENVER, CO 2018-08-23

WELDED STEEL TANKS

SECTIONS AND DETAILS

1695-D-60620

SHEET 6

Released

DATE AND TIME PLOTTED Not Plotted
PLOTTED BY Not Plotted

CAD SYSTEM AUTOCAD
CAD FILENAME UNKNOWN

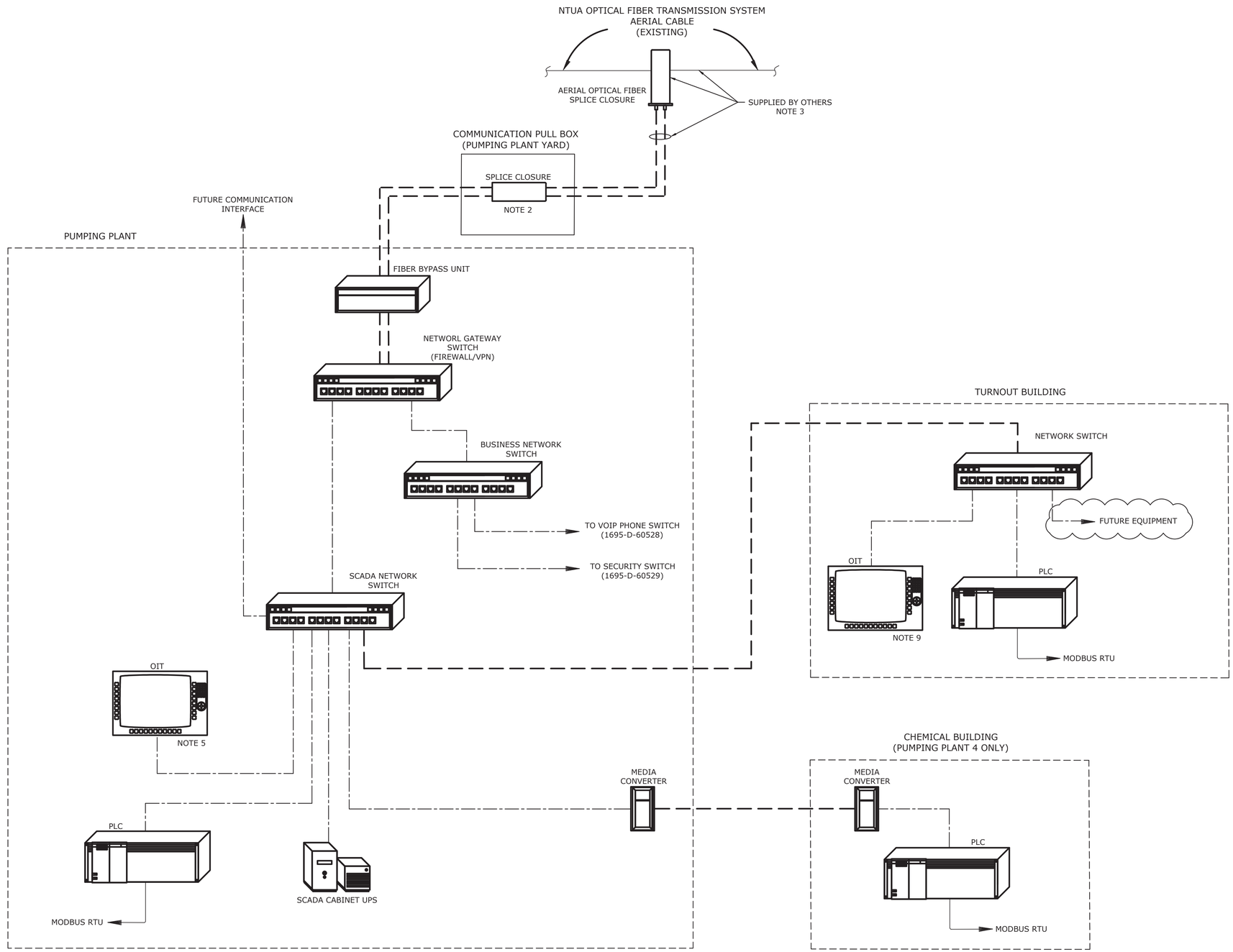

NOTES

1. Typical for both pumping plants except as noted
2. Terminate/splice single mode optical fiber in communication pull box splice closure.
3. Aerial optical fiber, aerial optical fiber splice enclosure, and optical fiber from aerial optical fiber splice enclosure to communication pull box provided by others.
4. Pumping Plant Switch will service all facility network ties, Air Chamber, Chemical Building, and adjacent access gate, vault, and door switches.
5. 15-inch touch panel display at Pumping Plant on the SCADA Equipment Cabinet door panels.
6. 20-port PoE Ethernet Switch at the Pumping Plants.
7. CAT 6 installed length not to exceed 300'
8. Provide media converters where required for connecting CAT 6 Ethernet cable to Optical fiber.
9. 15-inch touch panel display at Turnout Building on the SCADA Equipment Cabinet door panels

LEGEND

- Serial Connection
- CAT 6 Ethernet Cable
- Single Mode Optical Fiber Cable
- COAXIAL Cable

ABBREVIATIONS

OIT	Operator Interface Terminal
PLC	Programmable Logic Controller
POE	Power Over Ethernet
TSP	Twisted Shielded Pair
UPS	Uninterruptible Power Supply
VPN	Virtual Private Network

REFERENCE DRAWINGS

TELEPHONE SYSTEM	1695-D-60528
SECURITY AND SURVEILLANCE	1695-D-60529
SITE ELECTRICAL PLAN	1695-D-60547
CONDUIT PLAN	1695-D-60552

RECLAMATION
Managing Water in the West

ALWAYS THINK SAFETY

U.S. DEPARTMENT OF THE INTERIOR
BUREAU OF RECLAMATION
NAVAJO-GALLUP WATER SUPPLY PROJECT
NEW MEXICO

SAN JUAN LATERAL

PUMPING PLANT NOS. 4 AND 7

REV NO		
1	2019-12-06	D Modified to add turnout building

Robert Cass
DESIGNED
Robert Cass
DRAWN
Lisa Gentry
CHECKED
Cass, Robert D P.E.
TECH. APPR.
Boggess, Jay S
APPROVED
ADMIN APPROVAL - Manager, Electrical Design Group

DENVER, CO 2018-08-21

ELECTRICAL - SCADA

SCADA & NETWORK OVERVIEW

1695-D-60527

SHEET 1

Released

DATE AND TIME PLOTTED FEBRUARY 27, 2018 06:16
PLOTTED BY RCASS

CAD SYSTEM AutoCAD Rel. 22.0s
CAD FILENAME 1695-D-60527-RD-1.DWG

Released

NOTES

1. Typical for both pumping plants except as noted.
2. Phone communication system shall be Ethernet. All phone connections shall be through a central POE switch located in the SCADA equipment cabinet.
3. Provide Ethernet outlets for future Internet access.
4. Media converters are required for connecting CAT 6 Ethernet cable to Optical fiber.

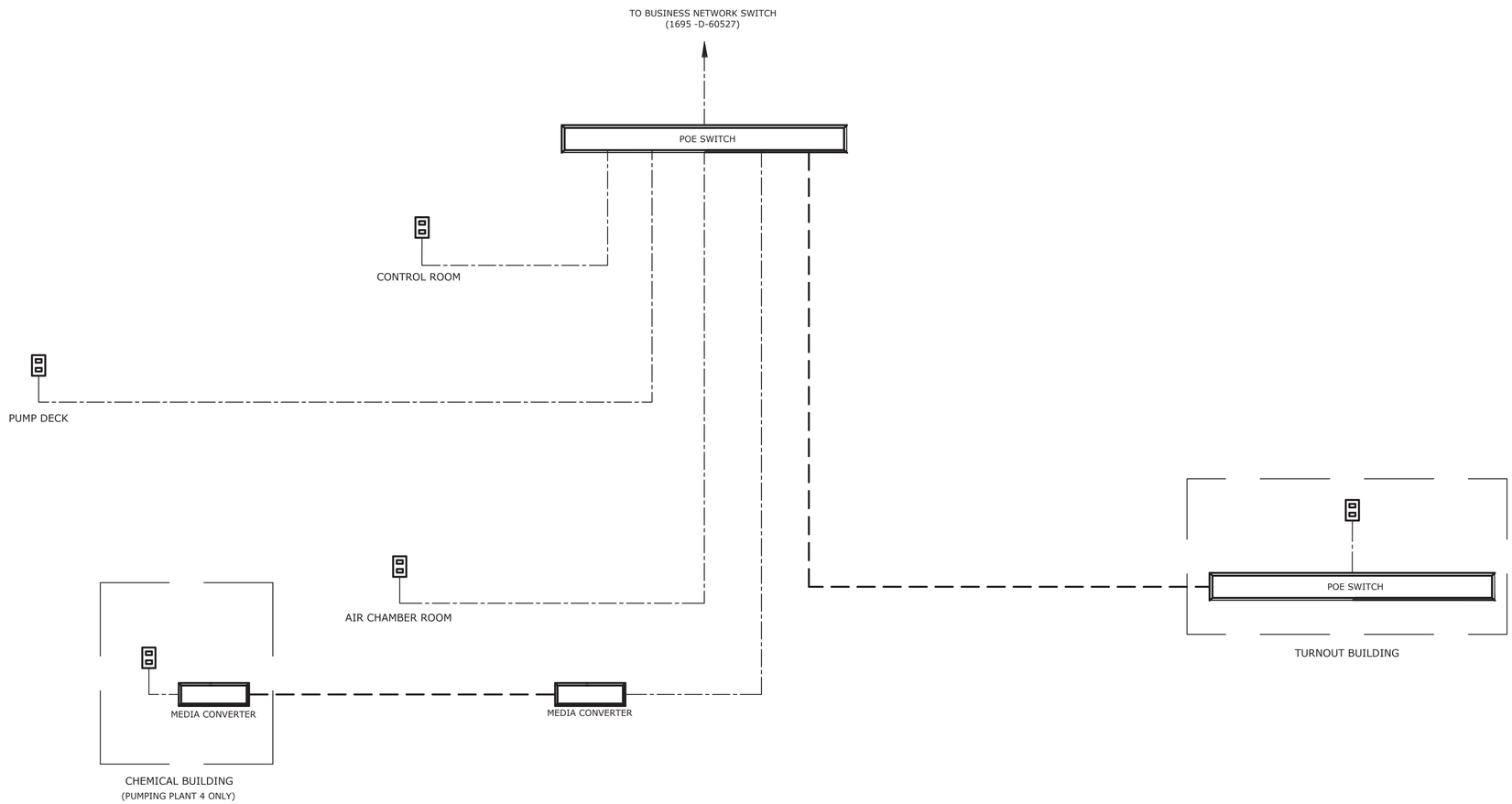

LEGEND

- CAT 3 Telephone Cable
- CAT 6 Ethernet Cable
- Single Mode Optical Fiber Cable
- COAXIAL Cable
- RJ45 Wall Plate for VOIP Telephone

REFERENCE DRAWINGS

SCADA & NETWORK OVERVIEW	1695-D-60527
SITE ELECTRICAL LAYOUT	1695-D-60547

RECLAMATION
Managing Water in the West

ALWAYS THINK SAFETY

U.S. DEPARTMENT OF THE INTERIOR
BUREAU OF RECLAMATION
NAVAJO-GALLUP WATER SUPPLY PROJECT
NEW MEXICO

SAN JUAN LATERAL

PUMPING PLANT NOS. 4 AND 7

REV NO 1 — 2019-12-06 — D Modified to add turnout building — Cass, Robert D P.E.

Robert Cass
DESIGNED
Robert Cass
DRAWN
Lisa Gentry
CHECKED
Cass, Robert D P.E.
TECH. APPR.
Boggess, Jay S
APPROVED
ADMIN APPROVAL - Manager, Electrical Design Group

DENVER, CO 2018-08-21

ELECTRICAL - SCADA

TELEPHONE SYSTEM

1695-D-60528

SHEET 1

DATE AND TIME PLOTTED FEBRUARY 27, 2018 06:20
PLOTTED BY RCASS

CAD SYSTEM AutoCAD Rel. 22.0s
CAD FILENAME 1695-D-60528-RD-1.DWG

Released

NOTES

1. Typical for both pumping plants except as noted
2. See site layout drawings for camera locations
3. Contractor to verify number and location of cameras with COR.

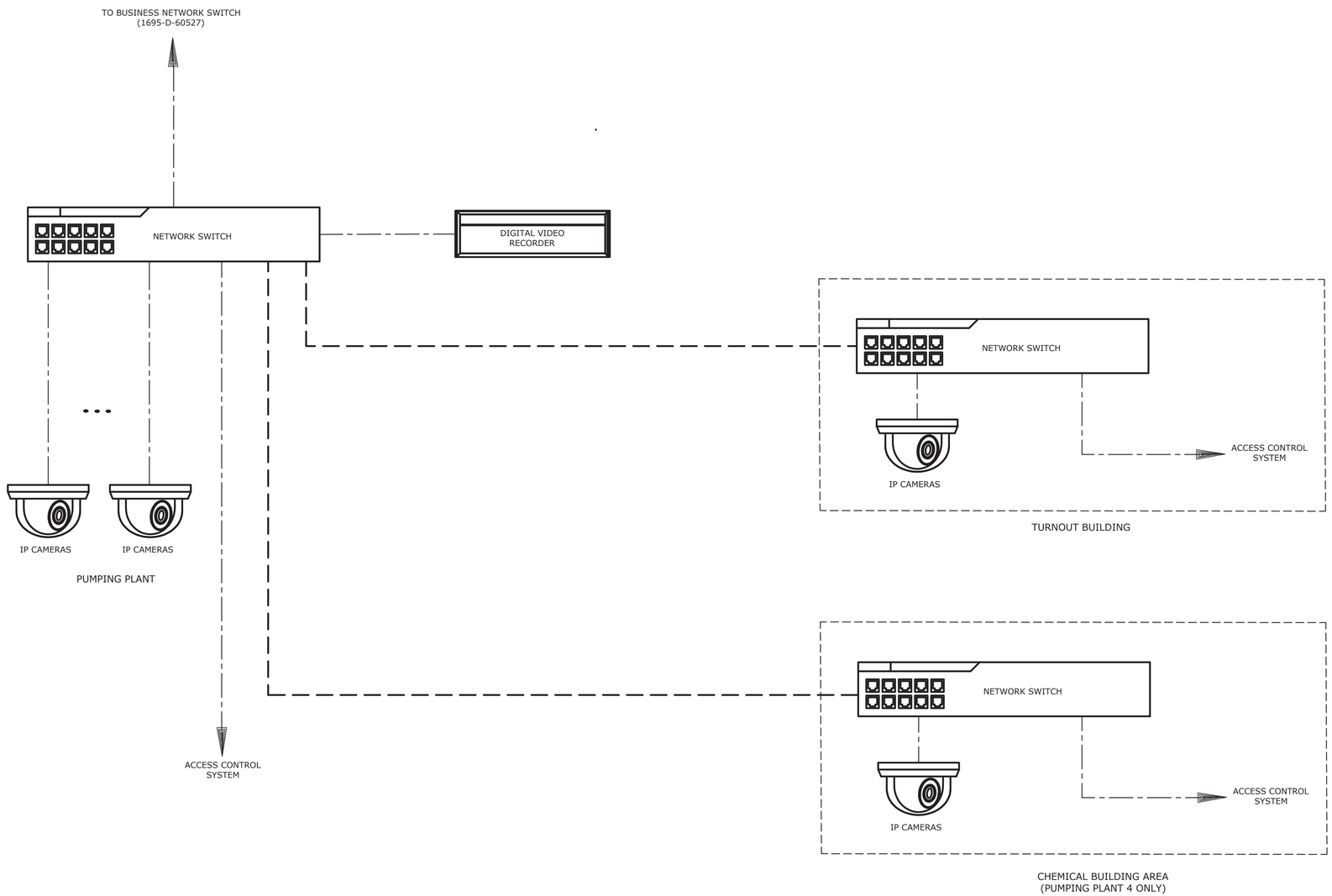

LEGEND

- Serial Connection
- CAT 6 Ethernet Cable
- Single Mode Optical Fiber Cable
- COAXIAL Cable

REFERENCE DRAWINGS

SCADA & NETWORK OVERVIEW	1695-D-60527

RECLAMATION
Managing Water in the West

ALWAYS THINK SAFETY

U.S. DEPARTMENT OF THE INTERIOR
BUREAU OF RECLAMATION
NAVAJO-GALLUP WATER SUPPLY PROJECT
NEW MEXICO

SAN JUAN LATERAL

PUMPING PLANT NOS. 4 AND 7

REV. NO.		
1	2019-12-06 Cass, Robert D. P.E.	D Modified to add turnout building.

Robert Cass
DESIGNED
Robert Cass
DRAWN
Lisa Gentry
CHECKED
Cass, Robert D P.E.
TECH. APPR.
Boggess, Jay S
APPROVED
ADMIN APPROVAL - Manager, Electrical Design Group

DENVER, CO 2018-08-21

ELECTRICAL - SCADA

SECURITY AND SURVEILLANCE SYSTEM

1695-D-60529

SHEET 1

DATE AND TIME PLOTTED
FEBRUARY 27, 2018 06:24
PLOTTED BY
KCASS

CAD SYSTEM
AutoCAD Rel. 22.0s
CAD FILENAME
1695-D-60529-ND-1.DWG

RECLAMATION
Managing Water in the West

NOTES

1. Modbus serial communication bus layouts shown are for example only. Contractor to optimize layout based on equipment provided, as-built equipment layouts, and associated limitations for the communication protocol.
2. Serial communication bus termination device not shown.
3. All serial communications via RS-485 cable.

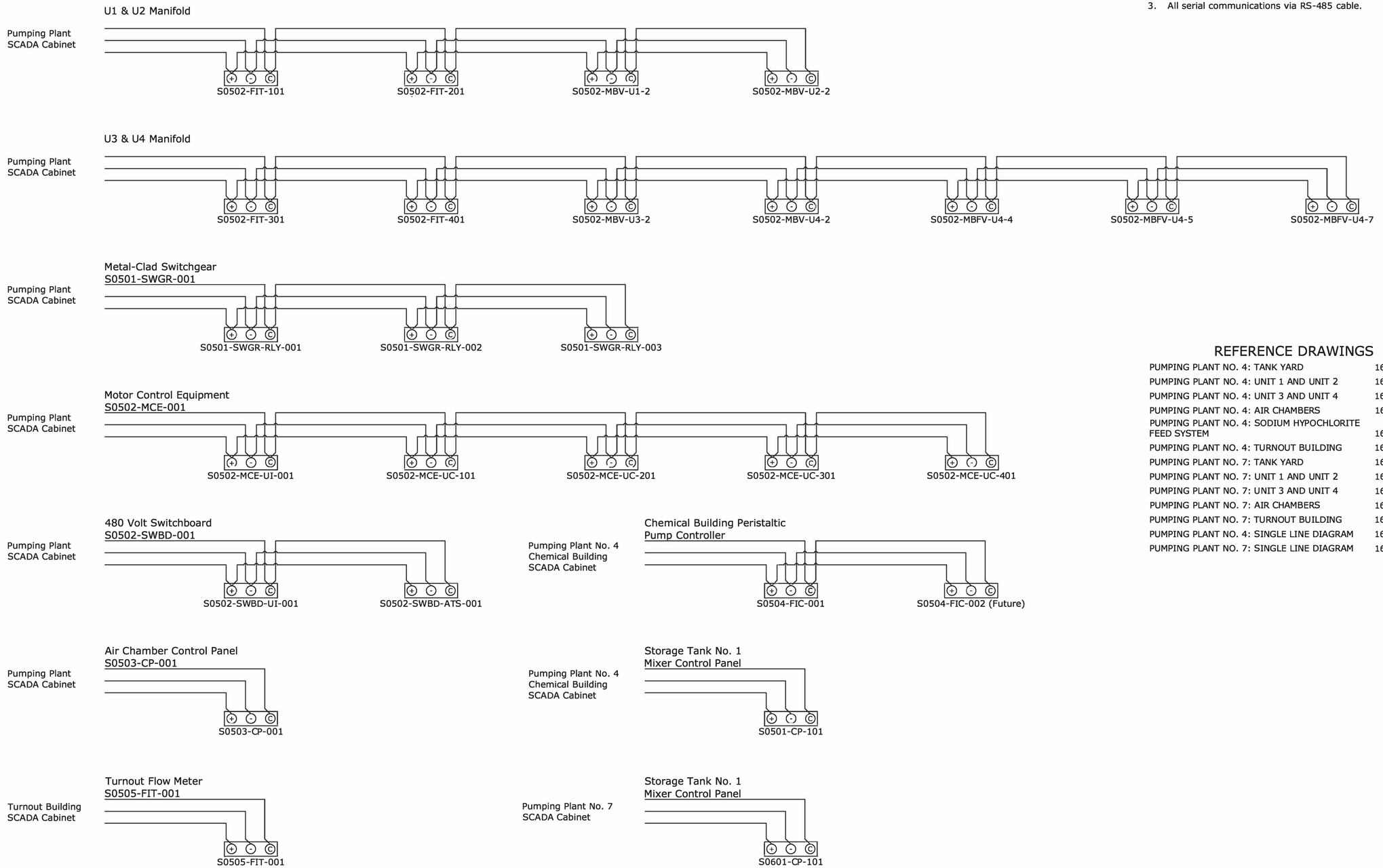

REFERENCE DRAWINGS

PUMPING PLANT NO. 4: TANK YARD	1695-D-60507
PUMPING PLANT NO. 4: UNIT 1 AND UNIT 2	1695-D-60508
PUMPING PLANT NO. 4: UNIT 3 AND UNIT 4	1695-D-60509
PUMPING PLANT NO. 4: AIR CHAMBERS	1695-D-60511
PUMPING PLANT NO. 4: SODIUM HYPOCHLORITE FEED SYSTEM	1695-D-60513
PUMPING PLANT NO. 4: TURNOUT BUILDING	1695-D-60515
PUMPING PLANT NO. 7: TANK YARD	1695-D-60516
PUMPING PLANT NO. 7: UNIT 1 AND UNIT 2	1695-D-60517
PUMPING PLANT NO. 7: UNIT 3 AND UNIT 4	1695-D-60518
PUMPING PLANT NO. 7: AIR CHAMBERS	1695-D-60520
PUMPING PLANT NO. 7: TURNOUT BUILDING	1695-D-60521
PUMPING PLANT NO. 4: SINGLE LINE DIAGRAM	1695-D-60532
PUMPING PLANT NO. 7: SINGLE LINE DIAGRAM	1695-D-60537

ALWAYS THINK SAFETY

U.S. DEPARTMENT OF THE INTERIOR
BUREAU OF RECLAMATION
NAVAJO GALLUP WATER SUPPLY PROJECT
NEW MEXICO

SAN JUAN LATERAL

PUMPING PLANT NOS. 4 AND 7

Darryl Liscomb
DESIGNED
Darryl Liscomb
DRAWN
Robert D. Cass
CHECKED
TECH. APPR. Lisa Gentry, P.E
APPROVED Jay Boggess
PEER REVIEWER - Manager, Electrical Design Group
DENVER, CO 2020-01-24

ELECTRICAL INSTALLATION

MODBUS SERIAL COMMUNICATION CONNECTION DIAGRAM

1695-D-60530

SHEET 1

LAST SAVED DATE 2020-01-15
LAST SAVED BY DLISCOMB

CAD SYSTEM AutoCAD 23.0s
CAD FILENAME 1695-D-60530 MODBUS.DWG

RECLAMATION
Managing Water in the West

SYMBOL	DESCRIPTION
	Normally open float switch
	Time delay contact
	Relay coil
	Indicating lamp
	Push-to-test indicating lamp
	Normally closed contact
	Normally open contact
	Normally open vacuum contact
	Mushroom head pushbutton
	Momentary pushbutton NO
	Momentary pushbutton NC
	Dual purpose pushbutton
	Current-limiting fuse
	Terminal block connection
	Female adapter plug
	Male adapter plug
	Resistive heater element
	Solenoid
	Pressure Switch NO
	Pressure Switch NC
HP	3 phase motor with RTDs shown
HP	3 phase motor

SYMBOL	DESCRIPTION
	Transformer
	Open delta potential transformer connection
	Current transformer
	Bushing-type current transformer
	Ground sensing current transformer
	Disconnect switch
	Vacuum circuit breaker, draw-out type
1 2 3 4	Molded-case circuit breaker, 1: Frame size, 2: Thermal trip, 3: Magnetic trip, 4: No. of poles
	Separable connection
	Surge arrester
	PLC output
	PLC input
	Limit switch NO
	Limit switch NC
	Thermal switch NO
	Diode
	Insulated gate bipolar transistor
	Resistor
IC BC	Reduced voltage soft starter
PF CAPACITOR	Power factor capcitor
FU	Fuse
	Potential transformer with fuses, drawout type

DESIGNATIONS

BC	Bypass contactor
CPT	Control power transformer
CR	Control relay
CT	Current transformer
FACP	Fire Alarm Control Panel
FASP	Fire Alarm Suppression Panel
FAX	Fault ___
FDT	Fault ___
FS	Float switch
FU	Fuse
GCT	Ground current transformer
HTR	Heater
IC	Isolation contactor
ISW	Isolation switch
LS	Limit Switch
M	Motor or Main Contact
MPR	Motor protection relay
MTS	Manual Transfer Switch
PCRS	Plastic coated rigid steel
PFC	Power factor contactor
PLC	Programmable logic controller
PT	Potential transformer
RMC	Rigid metal conduit
RTD	Resistance temperature detector
RVSS	Reduced voltage soft start
SA	Surge Arrester
SCR ASSY	Silicon-controlled rectifier assembly
SPD	Surge Protective Device
SR	Spring release (Closing Coil)
SS	Selector switch
ST	Shunt trip
TR	Timing relay
VFD	Variable frequency drive
Y	Anti-Pump coil

FACILITY AREA DESIGNATION

Position	Description	Name		Number
1	Lateral	San Juan		S
		Cutter		C
2 & 3	Site	Lateral	Facility	
		San Juan	Intake & Pumping Plant	01
			Water Treatment Plant	02
			Pumping Plant No. 2	03
			Pumping Plant No. 3	04
			Pumping Plant No. 4	05
			Pumping Plant No. 7	06
			Pumping Plant No. 8	07
			Black Hat Tank	08
			McKinley Surge Tank	09
			NAPI Turnout	11
			Sanostee/Burnham Turnout	12
			Newcomb Turnout	13
			Naschitti Turnout	14
			Crownpoint Turnout	15
			Rock Springs Turnout	16
		Cutter	Cutter Dam	01
			Pumping Plant No. 1	02
			Pumping Plant No. 2	03
			Regulating Tank No. 2	04
			NAPI Turnout	11
4 & 5	Physical Location	Yard		01
		Pump Room		02
		Air Chamber Room		03
		Chemical Building		04
		Turnout Building		05

ALWAYS THINK SAFETY

U.S. DEPARTMENT OF THE INTERIOR
BUREAU OF RECLAMATION
NAVAJO GALLUP WATER SUPPLY PROJECT
NEW MEXICO

SAN JUAN LATERAL

PUMPING PLANT NOS. 4 AND NO. 7

Darryl Liscomb
DESIGNED
Darryl Liscomb
DRAWN
Robert D. Cass
CHECKED
TECH. APPR. Lisa Gentry, P.E
APPROVED Jay Boggess
PEER REVIEWER - Manager, Electrical Design Group

DENVER, CO 2020-01-24

ELECTRICAL INSTALLATION

SYMBOLS AND DESIGNATIONS

1695-D-60531

SHEET 1

DATE AND TIME PLOTTED
PLOTTED BY
CAD SYSTEM
CAD FILENAME

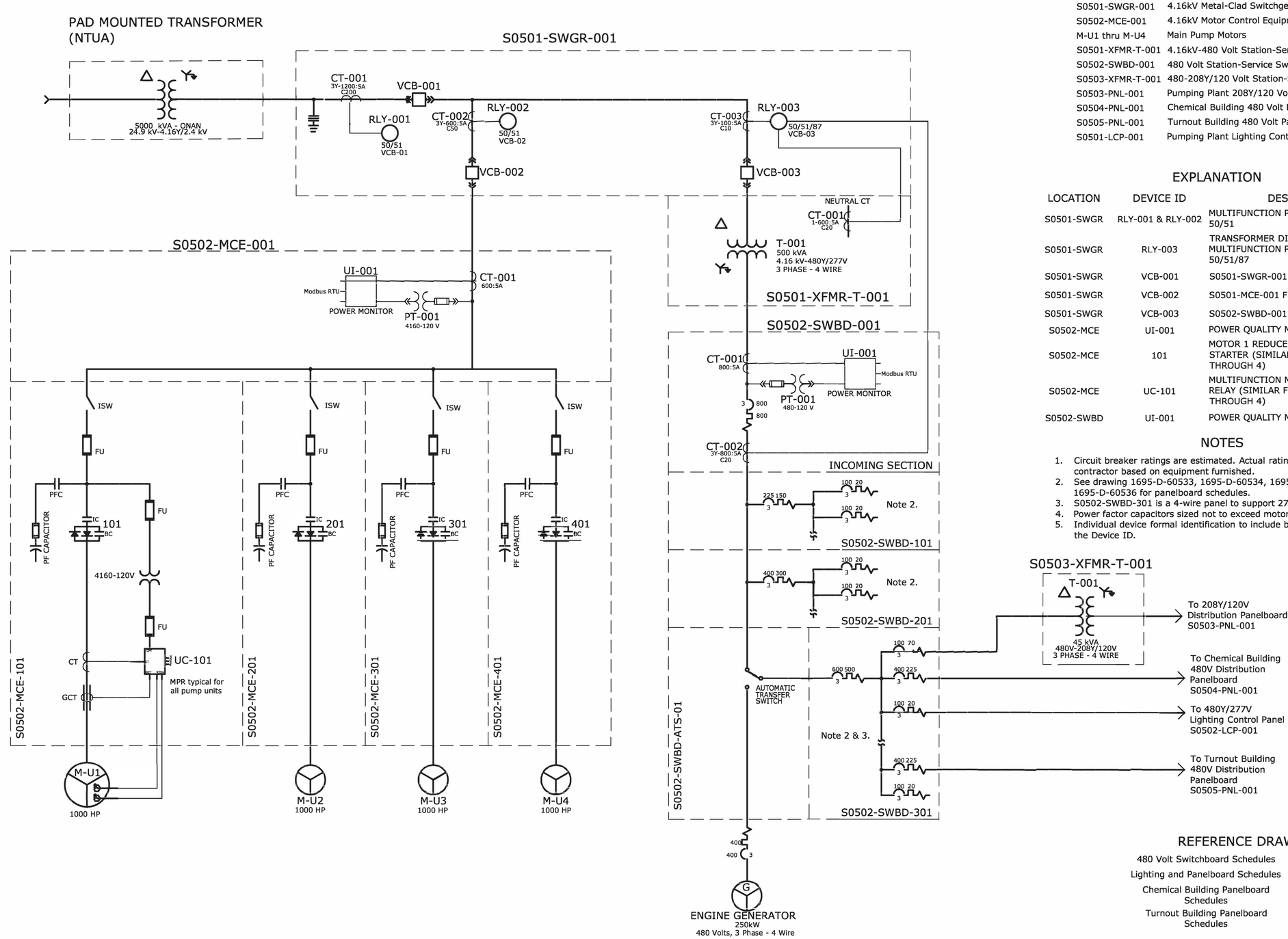

EQUIPMENT IDENTIFIERS

ENCLOSURE ID	DESCRIPTION
S0501-SWGR-001	4.16kV Metal-Clad Switchgear
S0502-MCE-001	4.16kV Motor Control Equipment
M-U1 thru M-U4	Main Pump Motors
S0501-XFMR-T-001	4.16kV-480 Volt Station-Service Transformer
S0502-SWBD-001	480 Volt Station-Service Switchboard
S0503-XFMR-T-001	480-208Y/120 Volt Station-Service Transformer
S0503-PNL-001	Pumping Plant 208Y/120 Volt Panelboard
S0504-PNL-001	Chemical Building 480 Volt Panelboard
S0505-PNL-001	Turnout Building 480 Volt Panelboard
S0501-LCP-001	Pumping Plant Lighting Control Panel

EXPLANATION

LOCATION	DEVICE ID	DESCRIPTION
S0501-SWGR	RLY-001 & RLY-002	MULTIFUNCTION PROTECTIVE RELAY 50/51
S0501-SWGR	RLY-003	TRANSFORMER DIFFERENTIAL MULTIFUNCTION PROTECTIVE RELAY 50/51/87
S0501-SWGR	VCB-001	S0501-SWGR-001 MAIN BREAKER
S0501-SWGR	VCB-002	S0501-MCE-001 FEEDER BREAKER
S0501-SWGR	VCB-003	S0502-SWBD-001 FEEDER BREAKER
S0502-MCE	UI-001	POWER QUALITY METER
S0502-MCE	101	MOTOR 1 REDUCED VOLTAGE SOFT STARTER (SIMILAR FOR MOTORS 2 THROUGH 4)
S0502-MCE	UC-101	MULTIFUNCTION MOTOR PROTECTIVE RELAY (SIMILAR FOR MOTORS 2 THROUGH 4)
S0502-SWBD	UI-001	POWER QUALITY METER

NOTES

1. Circuit breaker ratings are estimated. Actual ratings to be determined by contractor based on equipment furnished.
2. See drawing 1695-D-60533, 1695-D-60534, 1695-D-60535, and 1695-D-60536 for panelboard schedules.
3. S0502-SWBD-301 is a 4-wire panel to support 277 volt loads.
4. Power factor capacitors sized not to exceed motor Max kVAR.
5. Individual device formal identification to include both the Location and the Device ID.

REFERENCE DRAWINGS

480 Volt Switchboard Schedules	1695-D-60533
Lighting and Panelboard Schedules	1695-D-60534
Chemical Building Panelboard Schedules	1695-D-60535
Turnout Building Panelboard Schedules	1695-D-60536

RECLAMATION
Managing Water in the West

ALWAYS THINK SAFETY

U.S. DEPARTMENT OF THE INTERIOR
BUREAU OF RECLAMATION
NAVAJO GALLUP WATER SUPPLY PROJECT
NEW MEXICO

SAN JUAN LATERAL

PUMPING PLANT NOS. 4 AND 7

Darryl Liscomb
DESIGNED
Darryl Liscomb
DRAWN
Robert D. Cass
CHECKED
TECH. APPR. Lisa Gentry, P.E.
APPROVED Jay Boggess
PEER REVIEWER - Manager, Electrical Design Group
DENVER, CO 2020-01-24

ELECTRICAL INSTALLATION

PUMPING PLANT NO. 4
SINGLE LINE DIAGRAM

1695-D-60532

SHEET 1

DATE AND TIME PLOTTED
PLOTTED BY
CAD SYSTEM
CAD FILENAME

RECLAMATION
Managing Water in the West

Panelboard: S0502-SWBD-101

Supply From: S0502-SWBD-001
Mounting: Floor
Enclosure: NEMA 1
Bussing: Copper

Volts: 480
Phases: 3
Wires: 3
Additional Features: SPD

A.I.C. Rating: 35 kA
Mains Type: Molded Case Circuit Breaker
MCB Trip Rating: 150 A
Main Bus Rating: 600 A

Notes:

CKT	Circuit Description	Trip	Poles	A		B		C		Poles	Trip	Circuit Description	CKT
1	S0502-MBV-U1-2	20 A	3	124 VA	124 VA					3	20 A	S0502-MBV-U2-2	2
3						124 VA	124 VA						4
5								124 VA	124 VA				6
7	S0502-MBV-U3-2	20 A	3	124 VA	124 VA					3	20 A	S0502-MBV-U4-2	8
9						124 VA	124 VA						10
11								124 VA	124 VA				12
13	S0502-MBFV-U4-4	20 A	3	62 VA	124 VA					3	20 A	S0502-MBFV-U4-5	14
15						62 VA	124 VA						16
17								62 VA	124 VA				18
19	S0502-MBFV-U4-7	20 A	3	62 VA	6214...					3	90 A	S0503-C-101	20
21						62 VA	6214...						22
23								62 VA	6214...				24
25	S0503-C-201	90 A	3	6214...	0 VA					3	20 A	Spare	26
27						6214...	0 VA						28
29								6214...	0 VA				30
31	Spare	20 A	3	0 VA	0 VA					3	20 A	Spare	32
33						0 VA	0 VA						34
35								0 VA	0 VA				36
37	Spare	20 A	3	0 VA	0 VA					3	20 A	Spare	38
39						0 VA	0 VA						40
41								0 VA	0 VA				42
			Total Load:	13174 VA		13174 VA		13174 VA					
			Total Amps:	48 A		48 A		48 A					

Legend:

Load Classification	Connected Load	Demand Factor	Estimated Demand	Panel Totals	
Motor	39522 VA	111.79%	44183 VA		
				Total Conn. Load:	39522 VA
				Total Est. Demand:	44183 VA
				Total Conn.:	48 A
				Total Est. Demand:	53 A

Notes:

Panelboard: S0502-SWBD-201

Supply From: S0502-SWBD-001
Mounting: Floor
Enclosure: NEMA 1
Bussing: Copper

Volts: 480
Phases: 3
Wires: 3
Additional Features: SPD

A.I.C. Rating: 35 kA
Mains Type: Molded Case Circuit Breaker
MCB Trip Rating: 300 A
Main Bus Rating: 600 A

Notes:

CKT	Circuit Description	Trip	Poles	A		B		C		Poles	Trip	Circuit Description	CKT
1	RTU-1	125 A	3	1811...	1662...					3	80 A	S0502-480 VOLT RECEPTACLE	2
3						1811...	1662...						4
5								1811...	1662...				6
7	ROLL-UP DOOR 1 MOTOR OPERATOR	20 A	3	233 VA	233 VA					3	20 A	ROLL-UP DOOR 2 MOTOR OPERATOR	8
9						233 VA	233 VA						10
11								233 VA	233 VA				12
13	S0503-480 VOLT RECEPTACLE	80 A	3	1662...	2522...					3	20 A	UH-1	14
15						1662...	2522...						16
17								1662...	2522...				18
19	UH-3	20 A	3	2522...	0 VA					3	125 A	Spare	20
21						2522...	0 VA						22
23								2522...	0 VA				24
25	Spare	80 A	3	0 VA	0 VA					3	20 A	Spare	26
27						0 VA	0 VA						28
29								0 VA	0 VA				30
31	Spare	20 A	3	0 VA	0 VA					3	20 A	Spare	32
33						0 VA	0 VA						34
35								0 VA	0 VA				36
37													38
39													40
41													42
			Total Load:	56877 VA		56877 VA		56877 VA					
			Total Amps:	205 A		205 A		205 A					

Legend:

Load Classification	Connected Load	Demand Factor	Estimated Demand	Panel Totals	
HVAC	54336 VA	100.00%	54336 VA		
Heating	15131 VA	100.00%	15131 VA	**Total Conn. Load:**	170632 VA
Motor	1398 VA	112.50%	1573 VA	**Total Est. Demand:**	170806 VA
Other	99766 VA	100.00%	99766 VA	**Total Conn.:**	205 A
				Total Est. Demand:	205 A

Notes:

POWER - GENERAL NOTES

1. Circuit breaker ratings are estimated. Actual ratings to be determined by contractor based on equipment furnished.

Panelboard: S0502-SWBD-301

Supply From: S0502-SWBD-ATS-001
Mounting: Floor
Enclosure: NEMA 1
Bussing: Copper

Volts: 480/277 Wye
Phases: 3
Wires: 4
Additional Features: SPD

A.I.C. Rating: 35 kA
Mains Type: Molded Case Circuit Breaker
MCB Trip Rating: 500 A
Main Bus Rating: 600 A

Notes:

CKT	Circuit Description	Trip	Poles	A		B		C		Poles	Trip	Circuit Description	CKT
1	S0503-XFMR-T-001	70 A	3	7690...	5623...					3	225 A	S0504-PNL-001	2
3						8200...	5606...						4
5								9972...	5095...				6
7	S0502-LCP-001	20 A	3	1501...	2942...					3	225 A	S0505-PNL-001	8
9						1372...	4014...						10
11								1156...	0 VA				12
13	RTU-2	125 A	3	1811...	2522...					3	20 A	UH-2	14
15						1811...	2522...						16
17								1811...	2522...				18
19	Spare	20 A	3	0 VA	0 VA					3	20 A	Spare	20
21						0 VA	0 VA						22
23								0 VA	0 VA				24
25	Spare	70 A	3	0 VA	0 VA					3	125 A	Spare	26
27						0 VA	0 VA						28
29								0 VA	0 VA				30
31	Spare	225 A	3	0 VA									32
33						0 VA							34
35								0 VA					36
37													38
39													40
41													42
			Total Load:	89000 VA		90282 VA		82717 VA					
			Total Amps:	325 A		329 A		299 A					

Legend:

Load Classification	Connected Load	Demand Factor	Estimated Demand	Panel Totals	
HVAC	59515 VA	100.00%	59515 VA		
Heating	52666 VA	100.00%	52666 VA	**Total Conn. Load:**	247450 VA
Lighting - General	192 VA	125.00%	240 VA	**Total Est. Demand:**	248376 VA
Motor	7100 VA	112.36%	7978 VA	**Total Conn.:**	298 A
Other	119503 VA	100.00%	119503 VA	**Total Est. Demand:**	299 A
Receptacle	5220 VA	100.00%	5220 VA		
Lighting	3253 VA	100.00%	3253 VA		

Notes:
Panelboard S0505-PNL-001 load is expected to be approximately 175 Amperes at full buildout. Coordination between the Turnout Building water treatment/safety system designers will be required to ensure maximum loading will not be exceeded.

ALWAYS THINK **SAFETY**

U.S. DEPARTMENT OF THE INTERIOR
BUREAU OF RECLAMATION
NAVAJO GALLUP WATER SUPPLY PROJECT
NEW MEXICO
SAN JUAN LATERAL
PUMPING PLANT NOS. 4 AND 7

Darryl Liscomb
DESIGNED
Darryl Liscomb
DRAWN
Robert D. Cass
CHECKED
TECH. APPR. Lisa Gentry, P.E.
APPROVED Jay Boggess
Peer Reviewer - Manager, Electrical Design Group

DENVER, CO 2020-01-24

ELECTRICAL INSTALLATION

PUMPING PLANT NO. 4 480 VOLT SWITCHBOARD SCHEDULES

1695-D-60533

RECLAMATION
Managing Water in the West

POWER - GENERAL NOTES

1. Circuit breaker ratings are estimated. Actual ratings to be determined by contractor based on equipment furnished.

Panelboard: S0502-LCP-001

Supply From: S0502-SWBD-301
Mounting: Surface
Enclosure: NEMA 1 Indoor
Additional Features: Programmable lighting control, time schedule with astronomic clock, touch screen interface, and low voltage input connectors
Volts: 480/277 Wye
Phases: 3
Wires: 4

CKT	Circuit Description	Trip	Poles	A		B		C		Poles	Trip	Circuit Description	CKT
1	LIGHTING - CONTROL ROOM	20 A	1	192 VA	1309...					1	20 A	LIGHTING - INTERIOR 1	2
3	LIGHTING - INTERIOR 2	20 A	1			1314...	58 VA			1	20 A	LIGHTING - EMERGENCY AND EXIT LIGHTS	4
5	LIGHTING - EXTERIOR DOORWAY	20 A	1					272 VA	884 VA	1	20 A	LIGHTING - EXTERIOR GENERAL	6
7	Spare	20 A	1	0 VA	0 VA					1	20 A	Spare	8
9	Spare	20 A	1			0 VA	0 VA			1	20 A	Spare	10
11	Spare	20 A	1					0 VA					12
13													14
15													16
			Total Load:	1501 VA		1372 VA		1156 VA					
			Total Amps:	6 A		5 A		4 A					

Legend:

Load Classification	Connected Load	Demand Factor	Estimated Demand	Panel Totals	
Lighting - General	192 VA	125.00%	240 VA		
Other	1159 VA	100.00%	1159 VA	**Total Conn. Load:**	4028 VA
Lighting	2677 VA	100.00%	2677 VA	**Total Est. Demand:**	4076 VA
				Total Conn.:	5 A
				Total Est. Demand:	5 A

Notes:

Panelboard: S0503-PNL-001

Supply From: S0503-XFMR-T-001
Mounting: Surface
Enclosure: NEMA 1 Indoor
Bussing: Copper
Volts: 120/208 Wye
Phases: 3
Wires: 4
Additional Features: SPD
A.I.C. Rating: 14 kA
Mains Type: Main Lugs Only
MCB Trip Rating: 0 A
Main Bus Rating: 150 A

Notes:

CKT	Circuit Description	Trip	Poles	A		B		C		Poles	Trip	Circuit Description	CKT
1	S0502-FIT-101	20 A	1	5 VA	5 VA					1	20 A	S0502-FIT-201	2
3	S0502-FIT-301	20 A	1			5 VA	5 VA			1	20 A	S0502-FIT-401	4
5	SCADA CABINET RECEPTACLES 1	20 A	1					360 VA	1050 VA	2	20 A	PTAC-1	6
7	ENGINE GENERATOR BATTERY HEATING PAD	20 A	1	60 VA	1050 VA								8
9	ENGINE GENERATOR COOLANT JACKET...	20 A	1			1500 VA	360 VA			1	20 A	SCADA CABINET RECEPTACLES 2	10
11	ENGINE GENERATOR BATTERY CHARGER	20 A	1					792 VA	360 VA	1	20 A	FIRE ALARM CONTROL PANEL SUPPLY	12
13	AIR CHAMBER CONTROL PANEL	20 A	1	1000 VA	720 VA					1	20 A	COMMUNICATION RACK	14
15	PUMPING PLANT EXTERIOR RECEPTACLES	20 A	1			1260 VA	900 VA			1	20 A	RECEPTACLES PUMP ROOM 1	16
17	S0501-VCB-001 CONTROL POWER	20 A	1					1920 VA	900 VA	1	20 A	RECEPTACLES PUMP ROOM 2	18
19	S0501-SWGR-001 LIGHTS AND RECEPTACLES	20 A	1	500 VA	900 VA					1	20 A	RECEPTACLES AIR CHAMBER ROOM	20
21	S0501-SWGR-001 BUS PROTECTION UPS	20 A	1			1500 VA	1500 VA			1	20 A	CATHODIC PROTECTION RECTIFIER CABINET	22
23	S0501-SWGR-001 CABINET HEATERS	30 A	1					1500 VA	1920 VA	1	20 A	S0501-VCB-002 CONTROL POWER	24
25	S0501-VCB-003 CONTROL POWER	20 A	1	1920 VA	0 VA					3	30 A	Spare	26
27	GRAVITY DRAINAGE SUMP PUMP	30 A	3			1170 VA	0 VA						28
29								1170 VA	0 VA				30
31				1170 VA	0 VA					1	30 A	Spare	32
33	Spare	20 A	1			0 VA	0 VA			1	20 A	Spare	34
35	Spare	20 A	1					0 VA					36
37													38
39													40
41													42
			Total Load:	7690 VA		8200 VA		9972 VA					
			Total Amps:	64 A		69 A		84 A					

Legend:

Load Classification	Connected Load	Demand Factor	Estimated Demand	Panel Totals	
Heating	2101 VA	100.00%	2101 VA		
Motor	3509 VA	125.00%	4386 VA	**Total Conn. Load:**	20270 VA
Other	9980 VA	100.00%	9980 VA	**Total Est. Demand:**	21147 VA
Receptacle	4680 VA	100.00%	4680 VA	**Total Conn.:**	56 A
				Total Est. Demand:	59 A

Notes:

ALWAYS THINK **SAFETY**

U.S. DEPARTMENT OF THE INTERIOR
BUREAU OF RECLAMATION
NAVAJO GALLUP WATER SUPPLY PROJECT
NEW MEXICO
SAN JUAN LATERAL
PUMPING PLANT NOS. 4 AND 7

Darryl Liscomb
DESIGNED
Darryl Liscomb
DRAWN
Robert D. Cass
CHECKED
Lisa Gentry P.E.
TECH. APPR. Lisa Gentry, P.E.
Jay Boggess
APPROVED
Peer Reviewer - Manager, Electrical Design Group

DENVER, CO 2020-01-24

ELECTRICAL INSTALLATION

PUMPING PLANT NO. 4 LIGHTING AND PANELBOARD SCHEDULES

1695-D-60534

RECLAMATION
Managing Water in the West

POWER - GENERAL NOTES

1. Circuit breaker ratings are estimated. Actual ratings to be determined by contractor based on equipment furnished.

Panelboard: S0504-PNL-001

Supply From: S0502-SWBD-301
Mounting: Surface
Enclosure: NEMA 3R Outdoor
Bussing: Copper

Volts: 480
Phases: 3
Wires: 3
Additional Features:

A.I.C. Rating: 35 kA
Mains Type: Molded Case Circuit Breaker
MCB Trip Rating: 200 A
Main Bus Rating: 250 A

Notes:

CKT	Circuit Description	Trip	Poles	A		B		C		Poles	Trip	Circuit Description	CKT
1	UH-8	20 A	3	1000 VA	3333 VA					3	20 A	UH-4	2
3						1000 VA	3333 VA						4
5								1000 VA	3333 VA				6
7	UH-5	20 A	3	3333 VA	3333 VA					3	20 A	UH-6	8
9						3333 VA	3333 VA						10
11								3333 VA	3333 VA				12
13	UH-7	20 A	3	3333 VA	36000 VA					3	150 A	TANKLESS WATER HEATER	14
15						3333 VA	36000 VA						16
17								3333 VA	36000 VA				18
19	S0504-PNL-002	80 A	2	5278 VA	621 VA					3	20 A	EMERGENCY SHOWER PUMP	20
21						5108 VA	621 VA						22
23									621 VA				24
25	Spare	20 A	3	0 VA	0 VA					3	20 A	Spare	26
27						0 VA	0 VA						28
29								0 VA	0 VA				30
31	Spare	20 A	3	0 VA	0 VA					3	20 A	Spare	32
33						0 VA	0 VA						34
35								0 VA	0 VA				36
37					0 VA					2	20 A	Spare	38
39							0 VA						40
41													42
			Total Load:	56233 VA		56062 VA		50955 VA					
			Total Amps:	206 A		205 A		184 A					

Legend:

Load Classification	Connected Load	Demand Factor	Estimated Demand	Panel Totals	
HVAC	5179 VA	100.00%	5179 VA		
Heating	43000 VA	100.00%	43000 VA	**Total Conn. Load:**	161250 VA
Motor	3591 VA	112.98%	4057 VA	**Total Est. Demand:**	161716 VA
Other	108364 VA	100.00%	108364 VA	**Total Conn.:**	194 A
Receptacle	540 VA	100.00%	540 VA	**Total Est. Demand:**	195 A
Lighting	576 VA	100.00%	576 VA		

Notes:

Panelboard: S0504-PNL-002

Supply From: S0504-PNL-001
Mounting: Wall
Enclosure: Type 3R
Bussing: Copper

Volts: 120/240 Single
Phases: 1
Wires: 3
Additional Features: 15 kVA Transformer Load Center

A.I.C. Rating: 14 kA
Mains Type: Molded Case Circuit Breaker
MCB Trip Rating: 70 A
Main Bus Rating: 100 A

Notes:

CKT	Circuit Description	Trip	Poles	A		B		Poles	Trip	Circuit Description	CKT
1	PTAC-2	20 A	2	1295 VA	1295 VA			2	20 A	PTAC-3	2
3						1295 VA	1295 VA				4
5	SCADA	20 A	1	1500 VA	127 VA			1	20 A	VF-1	6
7	FACP2	20 A	1			500 VA	556 VA	1	20 A	INTERIOR LIGHTING	8
9	EMERGENCY AND EXIT LIGHTS	20 A	1	21 VA	204 VA			1	20 A	EXTERIOR LIGHTING	10
11	S0501-M-001 TANK MIXER	20 A	1			345 VA	540 VA	1	20 A	CHEMICAL BUILDING RECEPTACLES	12
13	EMERGENCY SHOWER SUMP PUMP	20 A	2	414 VA	264 VA			1	20 A	S0504-P-001 PERISTALTIC PUMP	14
15						414 VA	145 VA	2	20 A	S0504-P-003 SAMPLE RETURN PUMP	16
17	S0504-AIT-001 RESIDUAL ANALYZER	20 A	1	14 VA	145 VA						18
19	S0501-LE-001 WATER LEAK DETECTOR	20 A	1			10 VA	9 VA	1	20 A	UTILITY VAULT LIGHTING	20
21	Spare	20 A	2	0 VA	0 VA			1	20 A	Spare	22
23						0 VA	0 VA	1	20 A	Spare	24
25	Spare	20 A	1	0 VA	0 VA			1	20 A	Spare	26
27											28
29											30
31											32
33											34
35											36
37											38
39											40
41											42
			Total Load:	5278 VA		5108 VA					
			Total Amps:	44 A		43 A					

Legend:

Load Classification	Connected Load	Demand Factor	Estimated Demand	Panel Totals	
HVAC	5179 VA	100.00%	5179 VA		
Motor	1727 VA	111.99%	1934 VA	**Total Conn. Load:**	8386 VA
Other	364 VA	100.00%	364 VA	**Total Est. Demand:**	8593 VA
Receptacle	540 VA	100.00%	540 VA	**Total Conn.:**	35 A
Lighting	576 VA	100.00%	576 VA	**Total Est. Demand:**	36 A

Notes:

ALWAYS THINK **SAFETY**

U.S. DEPARTMENT OF THE INTERIOR
BUREAU OF RECLAMATION

NAVAJO GALLUP WATER SUPPLY PROJECT
NEW MEXICO

SAN JUAN LATERAL
PUMPING PLANT NOS. 4 AND 7

Darryl Liscomb
DESIGNED
Darryl Liscomb
DRAWN
Robert D. Cass
CHECKED
TECH. APPR. Lisa Gentry, P.E.
APPROVED Jay Boogess
Peer Reviewer - Manager, Electrical Design Group

DENVER, CO 2020-01-24

ELECTRICAL INSTALLATION

PUMPING PLANT NO. 4 CHEMICAL BUILDING PANELBOARD SCHEDULES

1695-D-60535

RECLAMATION
Managing Water in the West

POWER - GENERAL NOTES

1. Circuit breaker ratings are estimated. Actual ratings to be determined by contractor based on equipment provided.
2. Panelboard information provided is applicable to Pumping Plant No. 4. Pumping Plant No. 7 area designators must be updated to use the prefix S06 instead of S05.

Panelboard: S0505-PNL-001

Location: Turnout Building
Supply From: S0502-SWBD-301
Mounting: Surface
Enclosure: NEMA 1 Indoor

Volts: 480 Volts
Phases: 3
Wires: 3

A.I.C. Rating: 14 kA minimum
Mains Type: Molded Case Circuit Breaker
MCB Trip Rating: 225 A
Main Bus Rating: 250 A

Notes:

CKT	Circuit Description	Trip	Poles	A		B		C		Poles	Trip	Circuit Description	CKT
1	S0505-PNL-002 XFMR	20 A	2	14 A									2
3						18 A							4
5													6
7													8
9													10
11													12
13													14
15													16
17													18
			Total Load:	3302 VA		4374 VA		0 VA					
			Total Amps:	14 A		18 A		0 A					

Legend:

Load Classification	Connected Load	Demand Factor	Estimated Demand	Panel Totals	
Heating	2040 VA	100.00%	2040 VA		
Motor	829 VA	125.00%	1036 VA	**Total Conn. Load:**	4706 VA
Other	203 VA	100.00%	203 VA	**Total Est. Demand:**	4913 VA
Receptacle	1620 VA	100.00%	1620 VA	**Total Conn.:**	6 A
Power	0 VA	0.00%	0 VA	**Total Est. Demand:**	6 A
Lighting	15 VA	100.00%	15 VA		

Notes:

Panelboard: S0505-PNL-002

Supply From: S0505-XFMR-001
Mounting: Surface
Enclosure: NEMA 3R
Bussing: Copper

Volts: 120/240 Single
Phases: 1
Wires: 3
Additional Features: 15 kVA Transformer Load Center

A.I.C. Rating: 14 kAIR
Mains Type: Molded Case Circuit Breaker
MCB Trip Rating: 70 A
Main Bus Rating: 100 A

Notes:

CKT	Circuit Description	Trip	Poles	A		B		Poles	Trip	Circuit Description	CKT
1	PTAC-4	20 A	2	1020 VA	750 VA			1	20 A	S0505-FIT-001 Power	2
3						1020 VA	1500 VA	1	20 A	SCADA Cabinet	4
5	Interior Receptacles 1	20 A	1	540 VA	414 VA			2	20 A	Sump Pump	6
7	Interior Receptacles 2	20 A	1			540 VA	414 VA				8
9	Exterior Lighting	20 A	1	141 VA	17 VA			1	20 A	Exit & Emergency Lighting	10
11	Interior Lighting	20 A	1			0 VA	540 VA	1	20 A	Exterior Receptacles	12
13	S0505-FCV-TO-14	20 A	1	60 VA	360 VA			1	20 A	Security Panel	14
15	FACP	20 A	1			360 VA	0 VA	1	20 A	Spare	16
17	Spare	20 A	1	0 VA	0 VA			1	20 A	Spare	18
19	Spare	20 A	1			0 VA	0 VA	1	20 A	Spare	20
21											22
23											24
25											26
27											28
29											30
31											32
33											34
35											36
37											38
39											40
41											42
			Total Load:	3302 VA		4374 VA					
			Total Amps:	28 A		36 A					

Legend:

Load Classification	Connected Load	Demand Factor	Estimated Demand	Panel Totals	
Heating	2040 VA	100.00%	2040 VA		
Motor	829 VA	125.00%	1036 VA	**Total Conn. Load:**	4706 VA
Other	203 VA	100.00%	203 VA	**Total Est. Demand:**	4913 VA
Receptacle	1620 VA	100.00%	1620 VA	**Total Conn.:**	20 A
Power	0 VA	0.00%	0 VA	**Total Est. Demand:**	20 A
Lighting	15 VA	100.00%	15 VA		

Notes:

ALWAYS THINK **SAFETY**

U.S. DEPARTMENT OF THE INTERIOR
BUREAU OF RECLAMATION
NAVAJO GALLUP WATER SUPPLY PROJECT
NEW MEXICO

SAN JUAN LATERAL
PUMPING PLANT NOS. 4 AND 7

D. Liscomb
DESIGNED
D. Liscomb
DRAWN
R. Cass
CHECKED
L. Gentry P.E.
TECH. APPR.
Jay Boggess
APPROVED
Peer Reviewer - Manager, Electrical Design Group

DENVER, CO 2020-01-24

ELECTRICAL INSTALLATION

TURNOUT BUIDING DISTRIBUTION PANELBOARDS SCHEDULE

1695-D-60536

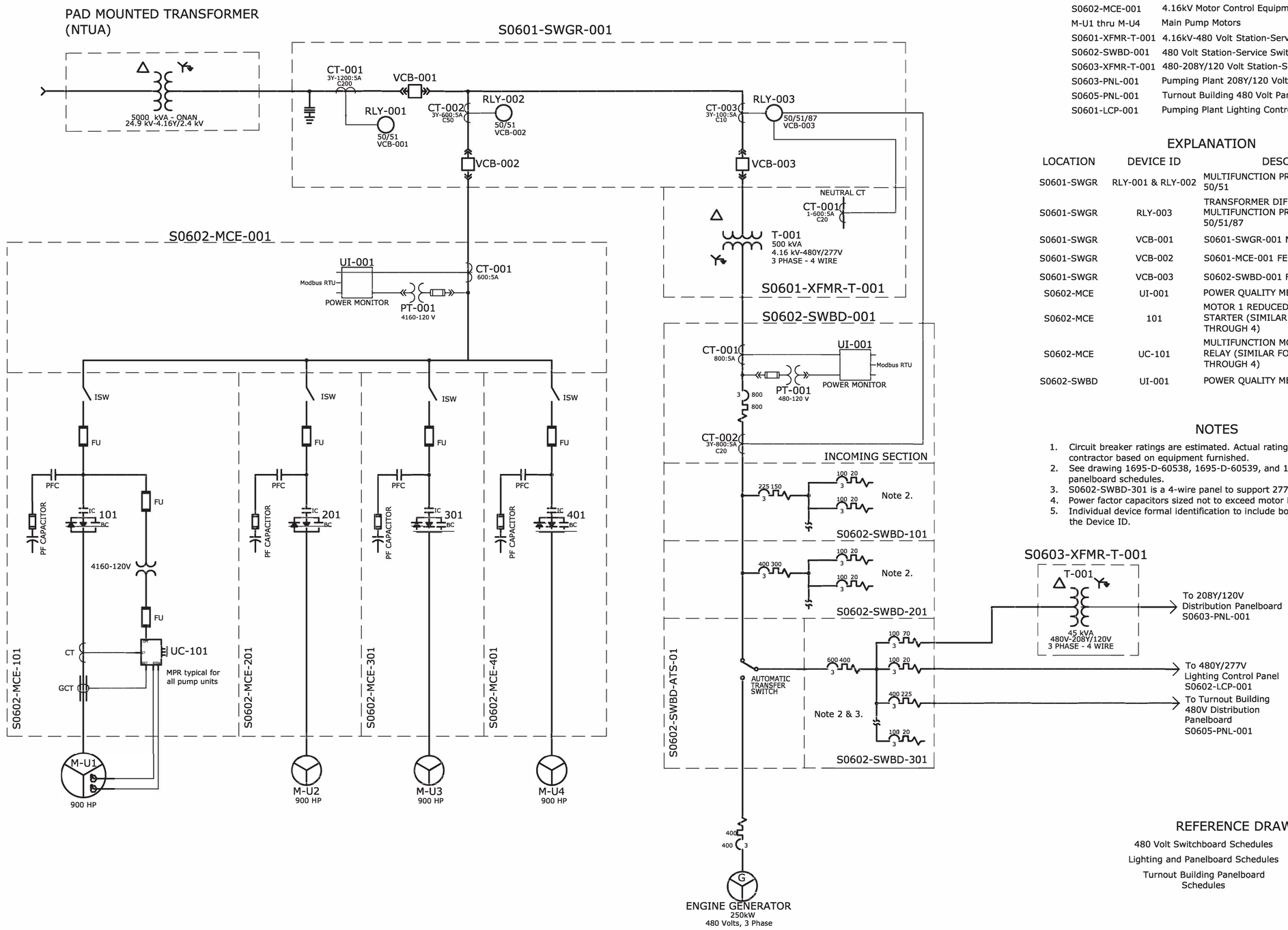

EQUIPMENT IDENTIFIERS

ENCLOSURE ID	DESCRIPTION
S0601-SWGR-001	4.16kV Metal-Clad Switchgear
S0602-MCE-001	4.16kV Motor Control Equipment
M-U1 thru M-U4	Main Pump Motors
S0601-XFMR-T-001	4.16kV-480 Volt Station-Service Transformer
S0602-SWBD-001	480 Volt Station-Service Switchboard
S0603-XFMR-T-001	480-208Y/120 Volt Station-Service Transformer
S0603-PNL-001	Pumping Plant 208Y/120 Volt Panelboard
S0605-PNL-001	Turnout Building 480 Volt Panelboard
S0601-LCP-001	Pumping Plant Lighting Control Panel

EXPLANATION

LOCATION	DEVICE ID	DESCRIPTION
S0601-SWGR	RLY-001 & RLY-002	MULTIFUNCTION PROTECTIVE RELAY 50/51
S0601-SWGR	RLY-003	TRANSFORMER DIFFERENTIAL MULTIFUNCTION PROTECTIVE RELAY 50/51/87
S0601-SWGR	VCB-001	S0601-SWGR-001 MAIN BREAKER
S0601-SWGR	VCB-002	S0601-MCE-001 FEEDER BREAKER
S0601-SWGR	VCB-003	S0602-SWBD-001 FEEDER BREAKER
S0602-MCE	UI-001	POWER QUALITY METER
S0602-MCE	101	MOTOR 1 REDUCED VOLTAGE SOFT STARTER (SIMILAR FOR MOTORS 2 THROUGH 4)
S0602-MCE	UC-101	MULTIFUNCTION MOTOR PROTECTIVE RELAY (SIMILAR FOR MOTORS 2 THROUGH 4)
S0602-SWBD	UI-001	POWER QUALITY METER

NOTES

1. Circuit breaker ratings are estimated. Actual ratings to be determined by contractor based on equipment furnished.
2. See drawing 1695-D-60538, 1695-D-60539, and 1695-D-60536 for panelboard schedules.
3. S0602-SWBD-301 is a 4-wire panel to support 277 volt loads.
4. Power factor capacitors sized not to exceed motor Max kVAR.
5. Individual device formal identification to include both the Location and the Device ID.

REFERENCE DRAWINGS

480 Volt Switchboard Schedules	1695-D-60538
Lighting and Panelboard Schedules	1695-D-60539
Turnout Building Panelboard Schedules	1695-D-60536

RECLAMATION
Managing Water in the West

ALWAYS THINK SAFETY

U.S. DEPARTMENT OF THE INTERIOR
BUREAU OF RECLAMATION
NAVAJO GALLUP WATER SUPPLY PROJECT
NEW MEXICO

SAN JUAN LATERAL

PUMPING PLANT NOS. 4 AND 7

Darryl Liscomb
DESIGNED
Darryl Liscomb
DRAWN
Robert D. Cass
CHECKED
TECH. APPR. Lisa Gentry, P.E
APPROVED Jay Boggess
PEER REVIEWER - Manager, Electrical Design Group
DENVER, CO 2020-01-24

ELECTRICAL INSTALLATION

PUMPING PLANT NO. 7
SINGLE LINE DIAGRAM

1695-D-60537

SHEET 1

DATE AND TIME PLOTTED
PLOTTED BY
CAD SYSTEM
CAD FILENAME

Panelboard: S0602-SWBD-101

Supply From: S0602-SWBD-001
Mounting: Floor
Enclosure: NEMA 1
Bussing: Copper

Volts: 480
Phases: 3
Wires: 3
Additional Features: SPD

A.I.C. Rating: 35 kA
Mains Type: Molded Case Circuit Breaker
MCB Trip Rating: 150 A
Main Bus Rating: 600 A

Notes:

CKT	Circuit Description	Trip	Poles	A		B		C		Poles	Trip	Circuit Description	CKT
1	S0602-MBV-U1-2	20 A	3	124 VA	124 VA					3	20 A	S0602-MBV-U2-2	2
3						124 VA	124 VA						4
5								124 VA	124 VA				6
7	S0602-MBV-U3-2	20 A	3	124 VA	124 VA					3	20 A	S0602-MBV-U4-2	8
9						124 VA	124 VA						10
11								124 VA	124 VA				12
13	S0602-MBFV-U4-4	20 A	3	62 VA	62 VA					3	20 A	S0602-MBFV-U4-5	14
15						62 VA	62 VA						16
17								62 VA	62 VA				18
19	S0602-MBFV-U4-7	20 A	3	62 VA	6214...					3	90 A	S0603-C-101	20
21						62 VA	6214...						22
23								62 VA	6214...				24
25	S0603-C-201	90 A	3	6214...	0 VA					3	20 A	Spare	26
27						6214...	0 VA						28
29								6214...	0 VA				30
31	Spare	20 A	3	0 VA	0 VA					3	20 A	Spare	32
33						0 VA	0 VA						34
35								0 VA	0 VA				36
37	Spare	90 A	3	0 VA	0 VA					3	20 A	Spare	38
39						0 VA	0 VA						40
41								0 VA	0 VA				42
			Total Load:	13112 VA		13112 VA		13112 VA					
			Total Amps:	47 A		47 A		47 A					

Legend:

Load Classification	Connected Load	Demand Factor	Estimated Demand	Panel Totals	
Motor	39336 VA	111.85%	43996 VA		
				Total Conn. Load:	39336 VA
				Total Est. Demand:	43996 VA
				Total Conn.:	47 A
				Total Est. Demand:	53 A

Notes:

Panelboard: S0602-SWBD-201

Supply From: S0602-SWBD-201
Mounting: Floor
Enclosure: NEMA 1
Bussing: Copper

Volts: 480
Phases: 3
Wires: 3
Additional Features: SPD

A.I.C. Rating: 35 kA
Mains Type: Molded Case Circuit Breaker
MCB Trip Rating: 300 A
Main Bus Rating: 600 A

Notes:

CKT	Circuit Description	Trip	Poles	A		B		C		Poles	Trip	Circuit Description	CKT
1	RTU-1	125 A	3	1811...	1662...					3	80 A	S0602-480 VOLT RECEPTACLE	2
3						1811...	1662...						4
5								1811...	1662...				6
7	ROLL-UP DOOR 1 MOTOR OPERATOR	20 A	3	233 VA	233 VA					3	20 A	ROLL-UP DOOR 2 MOTOR OPERATOR	8
9						233 VA	233 VA						10
11								233 VA	233 VA				12
13	S0603-480 VOLT RECEPTACLE	80 A	3	1662...	2522...					3	20 A	UH-3	14
15						1662...	2522...						16
17								1662...	2522...				18
19	UH-1	20 A	3	2522...	0 VA					3	20 A	Spare	20
21						2522...	0 VA						22
23								2522...	0 VA				24
25	Spare	20 A	3	0 VA	0 VA					3	20 A	Spare	26
27						0 VA	0 VA						28
29								0 VA	0 VA				30
31	Spare	80 A	3	0 VA	0 VA					3	125 A	Spare	32
33						0 VA	0 VA						34
35								0 VA	0 VA				36
37													38
39													40
41													42
			Total Load:	56877 VA		56877 VA		56877 VA					
			Total Amps:	205 A		205 A		205 A					

Legend:

Load Classification	Connected Load	Demand Factor	Estimated Demand	Panel Totals	
HVAC	54336 VA	100.00%	54336 VA		
Heating	15131 VA	100.00%	15131 VA	**Total Conn. Load:**	170632 VA
Motor	1398 VA	112.50%	1573 VA	**Total Est. Demand:**	170806 VA
Other	99766 VA	100.00%	99766 VA	**Total Conn.:**	205 A
				Total Est. Demand:	205 A

Notes:

POWER - GENERAL NOTES

1. Circuit breaker ratings are estimated. Actual ratings to be determined by contractor based on equipment furnished.

Panelboard: S0602-SWBD-301

Supply From: S0602-SWBD-ATS-001
Mounting: Floor
Enclosure: NEMA 1
Bussing: Copper

Volts: 480/277 Wye
Phases: 3
Wires: 4
Additional Features: SPD

A.I.C. Rating: 35 kA
Mains Type: Molded Case Circuit Breaker
MCB Trip Rating: 400 A
Main Bus Rating: 600 A

Notes:

CKT	Circuit Description	Trip	Poles	A		B		C		Poles	Trip	Circuit Description	CKT
1	S0603-XFMR-T-001	70 A	3	8330...	1405...					3	20 A	S0602-LCP-001	2
3						9820...	1438...						4
5								7397...	1156...				6
7	RTU-2	125 A	3	1811...	2942...					3	225 A	S0605-PNL-001	8
9						1811...	4014...						10
11								1811...	0 VA				12
13	UH-2	20 A	3	2522...	0 VA					3	225 A	Spare	14
15						2522...	0 VA						16
17								2522...	0 VA				18
19	Spare	20 A	3	0 VA	0 VA					3	20 A	Spare	20
21						0 VA	0 VA						22
23								0 VA	0 VA				24
25	Spare	20 A	3	0 VA	0 VA					3	20 A	Spare	26
27						0 VA	0 VA						28
29								0 VA	0 VA				30
31													32
33													34
35													36
37													38
39													40
41													42
			Total Load:	33311 VA		35905 VA		29187 VA					
			Total Amps:	123 A		132 A		105 A					

Legend:

Load Classification	Connected Load	Demand Factor	Estimated Demand	Panel Totals	
HVAC	54336 VA	100.00%	54336 VA		
Heating	9666 VA	100.00%	9666 VA	**Total Conn. Load:**	88867 VA
Lighting - General	96 VA	125.00%	120 VA	**Total Est. Demand:**	89768 VA
Motor	3854 VA	122.76%	4731 VA	**Total Conn.:**	107 A
Other	13491 VA	100.00%	13491 VA	**Total Est. Demand:**	108 A
Receptacle	4680 VA	100.00%	4680 VA		
Lighting	2743 VA	100.00%	2743 VA		

Notes:
Panelboard S0605-PNL-001 load is expected to be approximately 175 Amperes at full buildout. Coordination between the Turnout Building water treatment/safety system designers will be required to ensure maximum loading will not be exceeded.

RECLAMATION
Managing Water in the West

ALWAYS THINK **SAFETY**

U.S. DEPARTMENT OF THE INTERIOR
BUREAU OF RECLAMATION
NAVAJO GALLUP WATER SUPPLY PROJECT
NEW MEXICO
SAN JUAN LATERAL
PUMPING PLANT NOS. 4 AND 7

Darryl Liscomb
DESIGNED
Darryl Liscomb
DRAWN
Robert D. Cass
CHECKED
TECH. APPR. Lisa Gentry, P.E.
APPROVED Jay Boggess
Peer Reviewer - Manager, Electrical Design Group

DENVER, CO 2020-01-24

ELECTRICAL INSTALLATION

PUMPING PLANT NO. 7 480 VOLT SWITCHBOARD SCHEDULES

1695-D-60538

RECLAMATION
Managing Water in the West

POWER - GENERAL NOTES

1. Circuit breaker ratings are estimated. Actual ratings to be determined by contractor based on equipment furnished.

Panelboard: S0602-LCP-001

Supply From: S0602-SWBD-301
Mounting: Surface
Enclosure: NEMA 1 Indoor
Additional Features: Programmable lighting control, time schedule with astronomic clock, touch screen interface, low voltage input connectors
Volts: 480/277 Wye
Phases: 3
Wires: 4

CKT	Circuit Description	Trip	Poles	A		B		C		Poles	Trip	Circuit Description	CKT
1	LIGHTING - CONTROL ROOM	20 A	1	96 VA	1309...					1	20 A	LIGHTING - INTERIOR 1	2
3	LIGHTING - INTERIOR 2	20 A	1			1314...	124 VA			1	20 A	LIGHTING - EMERGENCY AND EXIT	4
5	LIGHTING - EXTERIOR DOORWAY	20 A	1					272 VA	884 VA	1	20 A	LIGHTING - EXTERIOR GENERAL	6
7	Spare	20 A	1	0 VA	0 VA					1	20 A	Spare	8
9	Spare	20 A	1			0 VA	0 VA			1	20 A	Spare	10
11	Spare	20 A	1					0 VA					12
13													14
15													16
			Total Load:	1405 VA		1438 VA		1156 VA					
			Total Amps:	5 A		5 A		4 A					

Legend:

Load Classification	Connected Load	Demand Factor	Estimated Demand	Panel Totals	
Lighting - General	96 VA	125.00%	120 VA		
Other	1159 VA	100.00%	1159 VA	**Total Conn. Load:**	3998 VA
Lighting	2743 VA	100.00%	2743 VA	**Total Est. Demand:**	4022 VA
				Total Conn.:	5 A
				Total Est. Demand:	5 A

Notes:

Panelboard: S0603-PNL-001

Supply From: S0603-XFMR-T-001
Mounting: Surface
Enclosure: NEMA 1 Indoor
Bussing: Copper
Volts: 120/208 Wye
Phases: 3
Wires: 4
Additional Features: SPD
A.I.C. Rating: 14 kA
Mains Type: Main Lugs Only
MCB Trip Rating: 0 A
Main Bus Rating: 150 A

Notes:

CKT	Circuit Description	Trip	Poles	A		B		C		Poles	Trip	Circuit Description	CKT
1	S0602-FIT-101	20 A	1	5 VA	5 VA					1	20 A	S0602-FIT-201	2
3	S0602-FIT-301	20 A	1			5 VA	5 VA			1	20 A	S0602-FIT-401	4
5	SCADA CABINET RECEPTACLES 1	20 A	1					360 VA	1050 VA	2	20 A	PTAC-1	6
7	ENGINE GENERATOR BATTERY HEATING PAD	20 A	1	60 VA	1050 VA								8
9	ENGINE GENERATOR COOLANT JACKET...	20 A	1			1500 VA	360 VA			1	20 A	SCADA CABINET RECEPTACLES 2	10
11	ENGINE GENERATOR BATTERY CHARGER	20 A	1					792 VA	360 VA	1	20 A	FIRE ALARM CONTROL PANEL SUPPLY	12
13	AIR CHAMBER CONTROL PANEL	20 A	1	1000 VA	720 VA					1	20 A	COMMUNICATION RACK	14
15	RECEPTACLES PUMPING PLANT EXTERIOR	20 A	1			1260 VA	900 VA			1	20 A	RECEPTACLES PUMP ROOM 1	16
17	S0601-SWGR-001 LIGHTS AND RECEPTACLES	20 A	1					500 VA	900 VA	1	20 A	RECEPTACLES PUMP ROOM 2	18
19	VCB-001 CONTROL POWER	20 A	1	1920 VA	900 VA					1	20 A	RECEPTACLES AIR CHAMBER ROOM	20
21	VCB-002 CONTROL POWER	20 A	1			1920 VA	1200 VA			1	20 A	CATHODIC PROTECTION RECTIFIER CABINET	22
23	VCB-003 CONTROL POWER	20 A	1					1920 VA	345 VA	1	20 A	S0601-M-001 TANK MIXER	24
25	S0601-SWGR-001 BUS PROTECTION UPS	20 A	1	1500 VA	1170 VA					3	30 A	GRAVITY DRAINAGE SUMP PUMP	26
27	S0601-SWGR-001 CABINET HEATERS	20 A	1			1500 VA	1170 VA						28
29	Spare	20 A	2					0 VA	1170 VA				30
31				0 VA	0 VA					1	20 A	Spare	32
33	Spare	20 A	1			0 VA	0 VA			1	20 A	Spare	34
35	Spare	20 A	1					0 VA					36
37													38
39													40
41													42
43													44
45													46
47													48
49													50
51													52
53													54
55													56
57													58
59													60
			Total Load:	8330 VA		9820 VA		7397 VA					
			Total Amps:	71 A		83 A		62 A					

Legend:

Load Classification	Connected Load	Demand Factor	Estimated Demand	Panel Totals	
Heating	2101 VA	100.00%	2101 VA		
Motor	3854 VA	122.76%	4731 VA	**Total Conn. Load:**	22967 VA
Other	12332 VA	100.00%	12332 VA	**Total Est. Demand:**	23844 VA
Receptacle	4680 VA	100.00%	4680 VA	**Total Conn.:**	64 A
				Total Est. Demand:	66 A

Notes:

ALWAYS THINK **SAFETY**

U.S. DEPARTMENT OF THE INTERIOR
BUREAU OF RECLAMATION
NAVAJO GALLUP WATER SUPPLY PROJECT
NEW MEXICO

SAN JUAN LATERAL
PUMPING PLANT NOS. 4 AND 7

Darryl Liscomb
DESIGNED
Darryl Liscomb
DRAWN
Robert D. Cass
CHECKED
TECH. APPR. Lisa Gentry, P.E.
APPROVED Jay Boggess
Peer Reviewer - Manager, Electrical Design Group

DENVER, CO 2020-01-24

ELECTRICAL INSTALLATION

PUMPING PLANT NO. 7 LIGHTING AND PANELBOARD SCHEDULES

1695-D-60539

RECLAMATION
Managing Water in the West

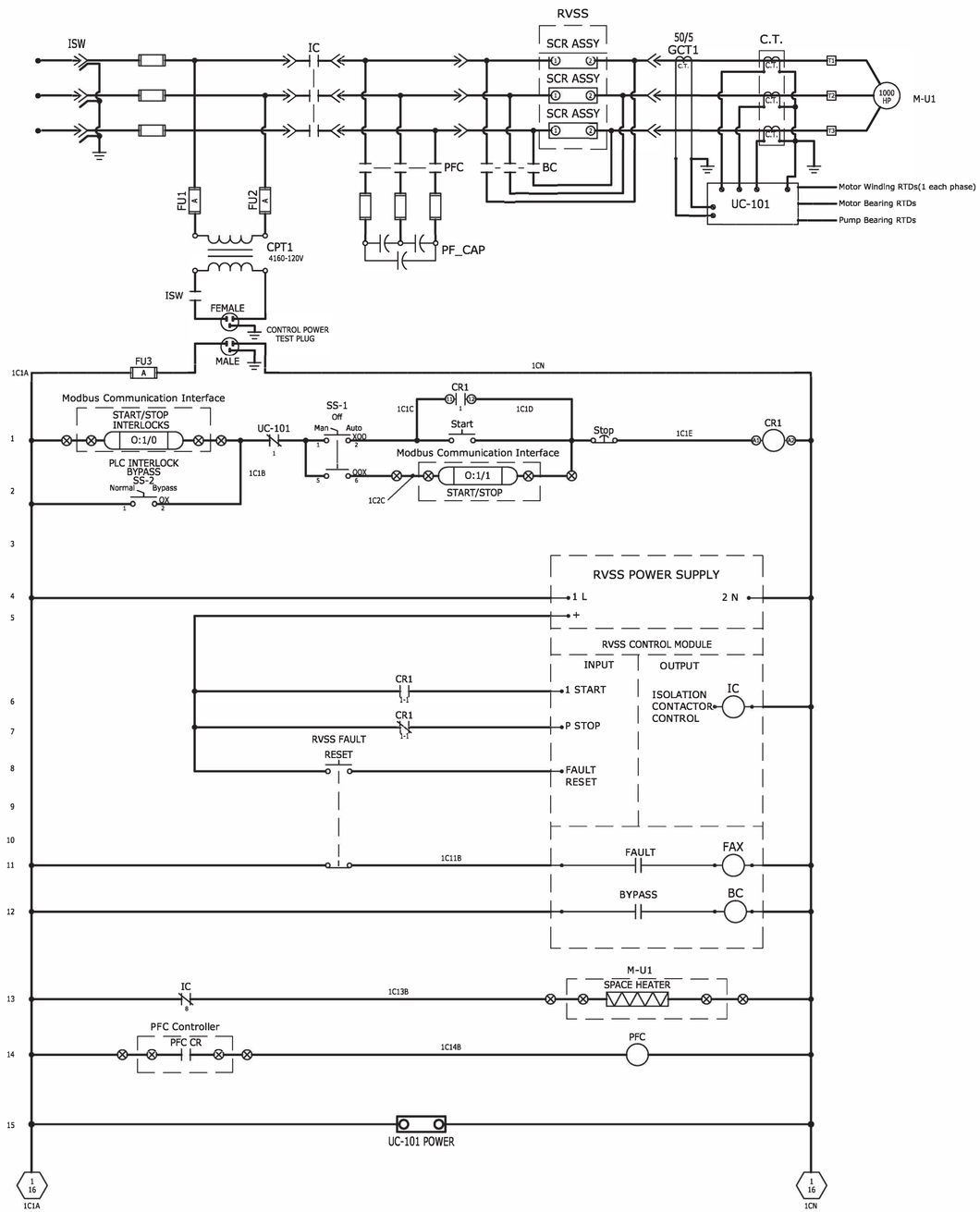

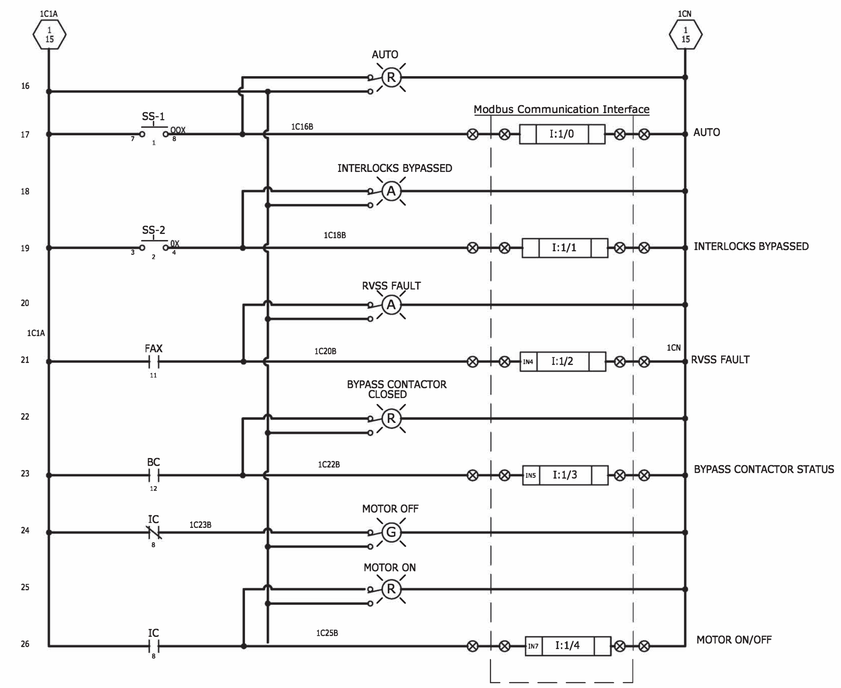

NOTES

1. All devices shown in the de-energized state.
2. Motor Starter will communicate with PLC via modbus. PLC I/O shown for monitor/control interface information only. Separate conductors are not required for each signal.
3. Motor protection relay UC-x01 will provide fault and trip information to the PLC via modbus. Modbus register values to be determined based on equipment provided and final relay settings
4. Controls for Units 2 through 4 will be similar. Component and wire labels to match the respective unit.

REFERENCE DRAWINGS

Pumping Plant No. 4 Single-Line Diagram	1695-D-60532
Pumping Plant No. 7 Single-Line Diagram	1695-D-60537
Designations and Symbols	1695-D-60531

ALWAYS THINK SAFETY

U.S. DEPARTMENT OF THE INTERIOR
BUREAU OF RECLAMATION
NAVAJO GALLUP WATER SUPPLY PROJECT
NEW MEXICO

SAN JUAN LATERAL

PUMPING PLANT NOS. 4 AND 7

Darryl Liscomb
DESIGNED
Darryl Liscomb
DRAWN
Robert D. Cass
CHECKED
TECH. APPR. Lisa Gentry, P.E
APPROVED Jay Boggess
PEER REVIEWER - Manager, Electrical Design Group

DENVER, CO 2020-01-24

ELECTRICAL INSTALLATION

UNIT CONTROLS SCHEMATIC DIAGRAM

1695-D-60540

SHEET 1

DATE AND TIME PLOTTED
PLOTTED BY
CAD SYSTEM
CAD FILENAME

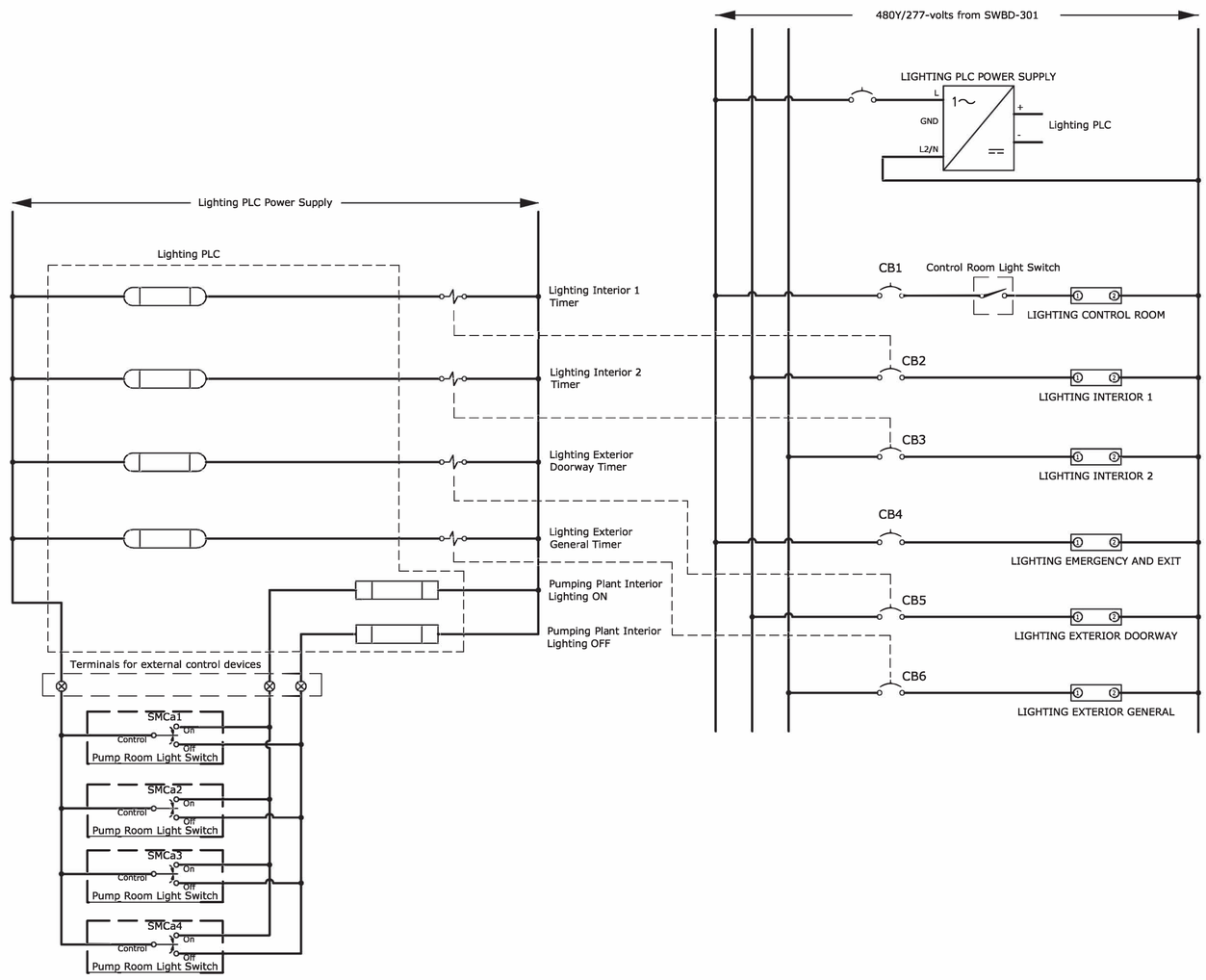

NOTES

1. Control circuit provided to indicate general control arrangement. Consult selected manufacturers wiring and control schematics for actual installation.
2. For general notes and symbols, reference drawing 40-D-6478.

REFERENCE DRAWINGS

PUMPING PLANT NO. 4 LIGHTING AND PANELBOARD SCHEDULES	1695-D-60534
PUMPING PLANT NO. 7 LIGHTING AND PANELBOARD SCHEDULES	1695-D-60539

LIGHTING CABLE & CONDUIT SCHEDULE

CIRCUIT TYPE	CONDUCTORS	CONDUIT (MINIMUM)
120 Volt Receptacles	1/c 12 AWG Premise Wire	3/4" RMC
Lighting Power Circuit	1/c 12 AWG Premise Wire	3/4" RMC

RECLAMATION
Managing Water in the West

ALWAYS THINK SAFETY

U.S. DEPARTMENT OF THE INTERIOR
BUREAU OF RECLAMATION
NAVAJO GALLUP WATER SUPPLY PROJECT
NEW MEXICO

SAN JUAN LATERAL

PUMPING PLANT NOS. 4 AND 7

Darryl Liscomb
DESIGNED
Darryl Liscomb
DRAWN
Robert D. Cass
CHECKED
TECH. APPR. Lisa Gentry, P.E
APPROVED Jay Boggess
PEER REVIEWER - Manager, Electrical Design Group
DENVER, CO 2020-01-24

ELECTRICAL INSTALLATION

LIGHTING CONTROL SCHEMATIC

1695-D-60541

SHEET 1

LAST SAVED DATE 2020-01-15
LAST SAVED BY DLISCOMB

CAD SYSTEM AutoCAD 23.0s
CAD FILENAME 1695-D-60541 LIGHTING CONTROL.DWG

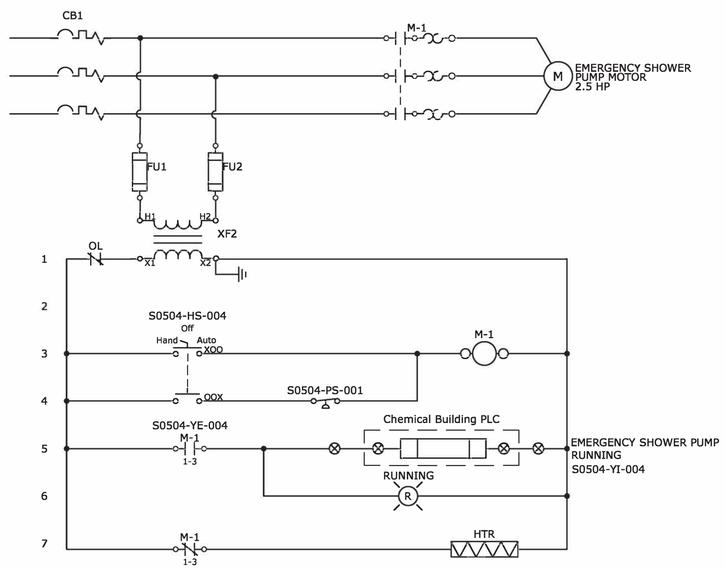

REFERENCE DRAWINGS

Pumping Plant No. 4 Emergency Shower Supply P&ID	1695-D-60514
Symbols and Designations	1695-D-60531
Pumping Plant No. 4 Chemical Building Panelboard Schedules	1695-D-60535

RECLAMATION
Managing Water in the West

ALWAYS THINK SAFETY

U.S. DEPARTMENT OF THE INTERIOR
BUREAU OF RECLAMATION
NAVAJO GALLUP WATER SUPPLY PROJECT
NEW MEXICO

SAN JUAN LATERAL

PUMPING PLANT NOS. 4 AND 7

Darryl Liscomb
DESIGNED
Darryl Liscomb
DRAWN
Robert D. Cass
CHECKED
TECH. APPR. Lisa Gentry, P.E
APPROVED Jay Boggess
PEER REVIEWER - Manager, Electrical Design Group

DENVER, CO 2020-01-24

ELECTRICAL
INSTALLATION

EMERGENCY SHOWER
PUMP CONTROL
SCHEMATIC DIAGRAM

1695-D-60542

SHEET 1

DATE AND TIME PLOTTED
PLOTTED BY
CAD SYSTEM
CAD FILENAME

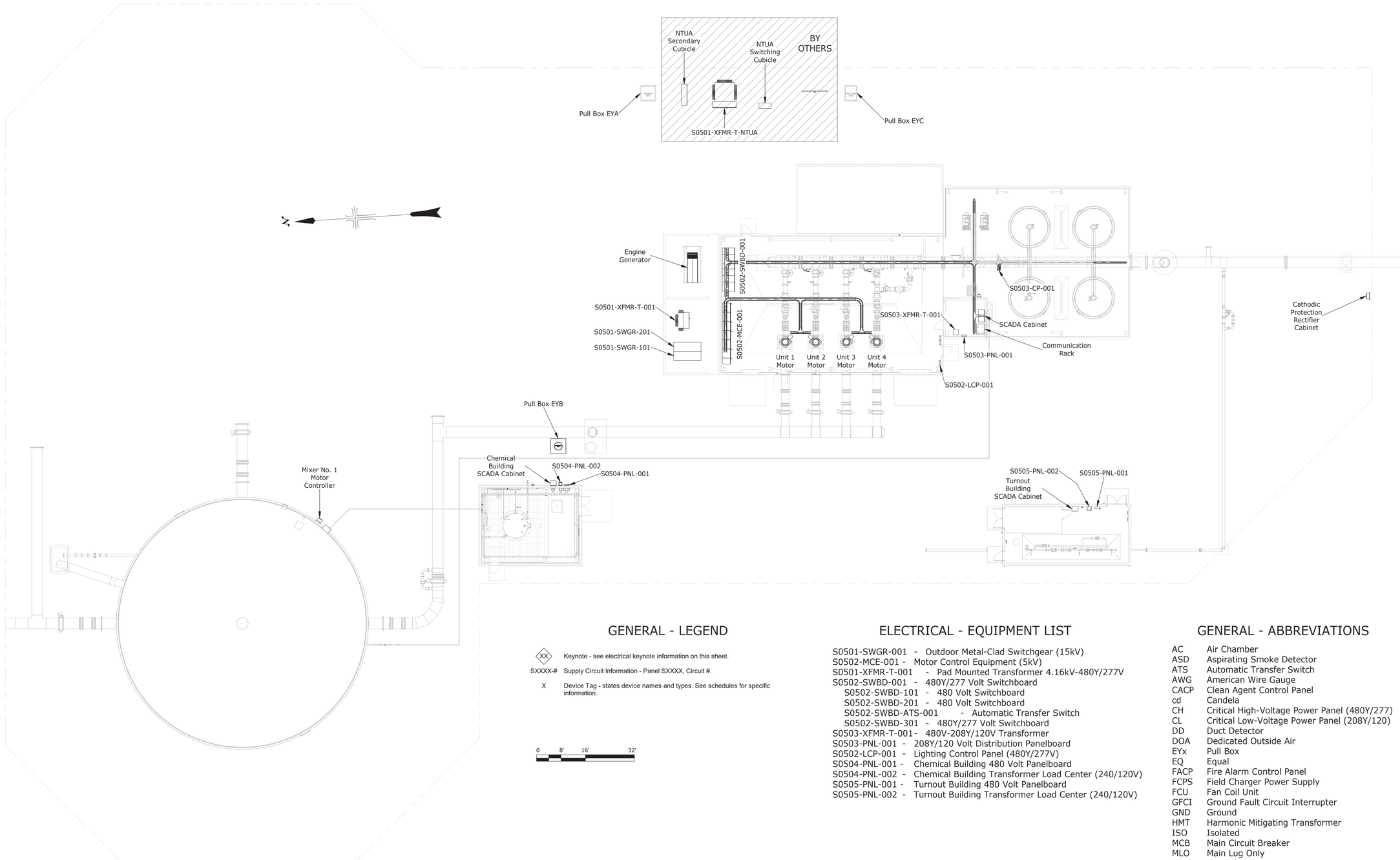

GENERAL - LEGEND

XX	Keynote - see electrical keynote information on this sheet.
SXXXX-#	Supply Circuit Information - Panel SXXXX, Circuit #.
X	Device Tag - states device names and types. See schedules for specific information.

0 8' 16' 32'

ELECTRICAL - EQUIPMENT LIST

S0501-SWGR-001 - Outdoor Metal-Clad Switchgear (15kV)
S0502-MCE-001 - Motor Control Equipment (5kV)
S0501-XFMR-T-001 - Pad Mounted Transformer 4.16kV-480Y/277V
S0502-SWBD-001 - 480Y/277 Volt Switchboard
S0502-SWBD-101 - 480 Volt Switchboard
S0502-SWBD-201 - 480 Volt Switchboard
S0502-SWBD-ATS-001 - Automatic Transfer Switch
S0502-SWBD-301 - 480Y/277 Volt Switchboard
S0503-XFMR-T-001 - 480V-208Y/120V Transformer
S0503-PNL-001 - 208Y/120 Volt Distribution Panelboard
S0502-LCP-001 - Lighting Control Panel (480Y/277V)
S0504-PNL-001 - Chemical Building 480 Volt Panelboard
S0504-PNL-002 - Chemical Building Transformer Load Center (240/120V)
S0505-PNL-001 - Turnout Building 480 Volt Panelboard
S0505-PNL-002 - Turnout Building Transformer Load Center (240/120V)

GENERAL - ABBREVIATIONS

AC	Air Chamber
ASD	Aspirating Smoke Detector
ATS	Automatic Transfer Switch
AWG	American Wire Gauge
CACP	Clean Agent Control Panel
cd	Candela
CH	Critical High-Voltage Power Panel (480Y/277)
CL	Critical Low-Voltage Power Panel (208Y/120)
DD	Duct Detector
DOA	Dedicated Outside Air
EYx	Pull Box
EQ	Equal
FACP	Fire Alarm Control Panel
FCPS	Field Charger Power Supply
FCU	Fan Coil Unit
GFCI	Ground Fault Circuit Interrupter
GND	Ground
HMT	Harmonic Mitigating Transformer
ISO	Isolated
MCB	Main Circuit Breaker
MLO	Main Lug Only
NEU	Neutral
PTAC	Packaged Terminal Air Conditioner
RTU	Air Conditioning Unit
TK	Tank
UH	Unit Heater

RECLAMATION
Managing Water in the West

ALWAYS THINK **SAFETY**

U.S. DEPARTMENT OF THE INTERIOR
BUREAU OF RECLAMATION

NAVAJO GALLUP WATER SUPPLY PROJECT
NEW MEXICO

SAN JUAN LATERAL
PUMPING PLANT NOS. 4 AND 7

Darryl Liscomb
DESIGNED
Darryl Liscomb
DRAWN
Robert D. Cass
CHECKED
TECH. APPR. Lisa Gentry, P.E.
APPROVED Jay Boggess
Peer Reviewer - Manager, Electrical Design Group

DENVER, CO 2020-01-24

ELECTRICAL INSTALLATION

ELECTRICAL PLAN - PUMPING PLANT NO. 4 SITE

1695-D-60543

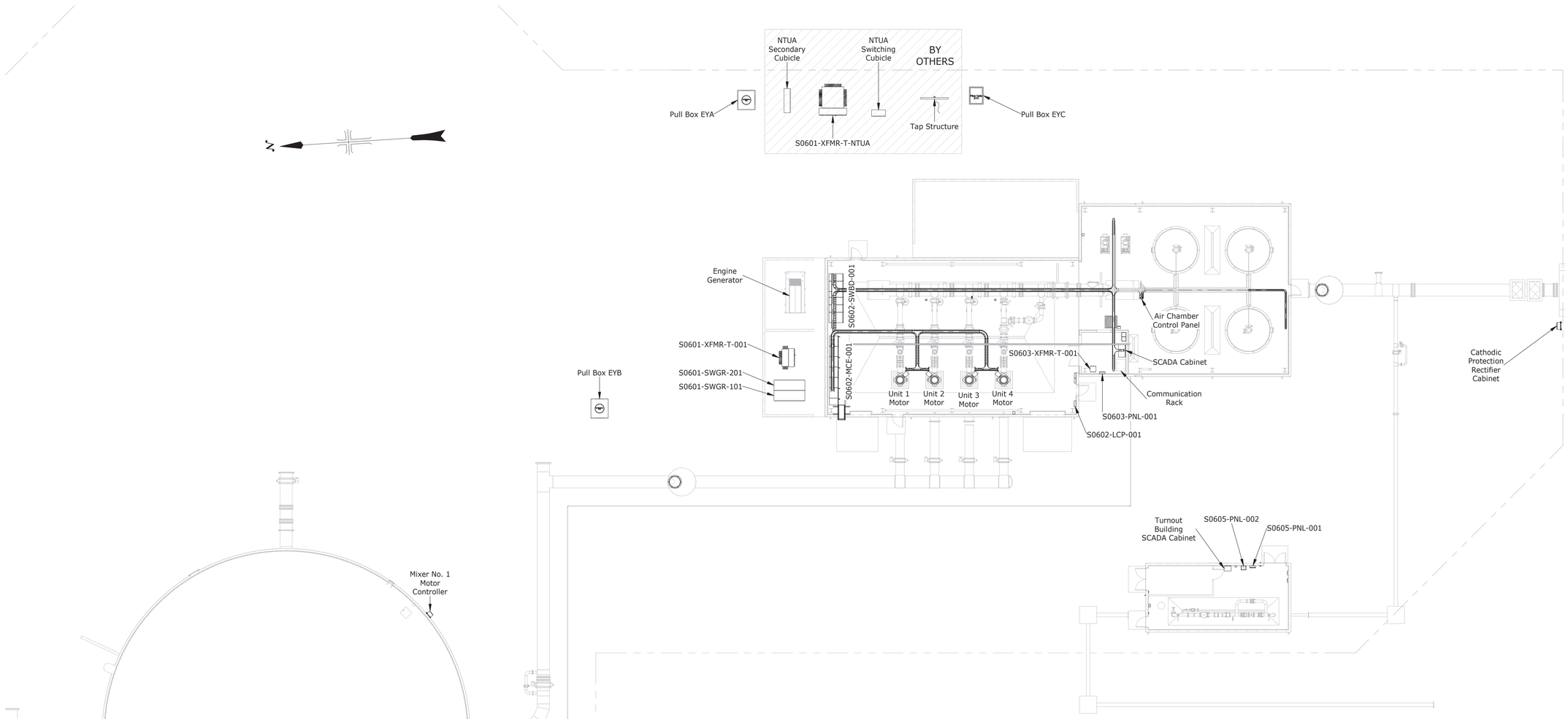

GENERAL - LEGEND

XX	Keynote - see electrical keynote information on this sheet.
SXXXX-#	Supply Circuit Information - Panel SXXXX, Circuit #.
X	Device Tag - states device names and types. See schedules for specific information.

0 8' 16' 32'

ELECTRICAL - EQUIPMENT LIST

S0601-SWGR-001 - Outdoor Metal-Clad Switchgear (15kV)
S0602-MCE-001 - Motor Control Equipment (5kV)
S0601-XFMR-T-001 - Pad Mounted Transformer 4.16kV-480Y/277V
S0602-SWBD-001 - 480Y/277 Volt Switchgear
- S0602-SWBD-101 - 480 Volt Switchboard
- S0602-SWBD-201 - 480 Volt Switchboardboard
- S0602-SWBD-ATS-001 - Automatic Transfer Switch
- S0602-SWBD-301 - 480Y/277 Volt Switchboard

S0603-XFMR-T-001 - 480V-208Y/120V Transformer
S0603-PNL-001 - 208Y/120 Volt Distribution Panelboard
S0602-LCP-001 - Lighting Control Panel (480Y/277V)
S0605-PNL-001 - Turnout Building 480 Volt Panelboard
S0605-PNL-002 - Turnout Building Transformer Load Center (240/120V)

GENERAL - ABBREVIATIONS

AC	Air Chamber
ASD	Aspirating Smoke Detector
ATS	Automatic Transfer Switch
AWG	American Wire Gauge
CACP	Clean Agent Control Panel
cd	Candela
CH	Critical High-Voltage Power Panel (480Y/277)
CL	Critical Low-Voltage Power Panel (208Y/120)
DD	Duct Detector
DOA	Dedicated Outside Air
EYx	Pull Box
EQ	Equal
FACP	Fire Alarm Control Panel
FCPS	Field Charger Power Supply
FCU	Fan Coil Unit
GFCI	Ground Fault Circuit Interrupter
GND	Ground
HMT	Harmonic Mitigating Transformer
ISO	Isolated
MCB	Main Circuit Breaker
MLO	Main Lug Only
NEU	Neutral
PTAC	Packaged Terminal Air Conditioner
RTU	Air Conditioning Unit
TK	Tank
UH	Unit Heater

RECLAMATION
Managing Water in the West

ALWAYS THINK SAFETY

U.S. DEPARTMENT OF THE INTERIOR
BUREAU OF RECLAMATION
NAVAJO GALLUP WATER SUPPLY PROJECT
NEW MEXICO

SAN JUAN LATERAL
PUMPING PLANT NOS. 4 AND 7

Darryl Liscomb
DESIGNED
Darryl Liscomb
DRAWN
Robert D. Cass
CHECKED
TECH. APPR. Lisa Gentry, P.E.
APPROVED Jay Boggess
Peer Reviewer - Manager, Electrical Design Group

DENVER, CO 2020-01-24

ELECTRICAL INSTALLATION

ELECTRICAL PLAN - PUMPING PLANT NO. 7 SITE

1695-D-60544

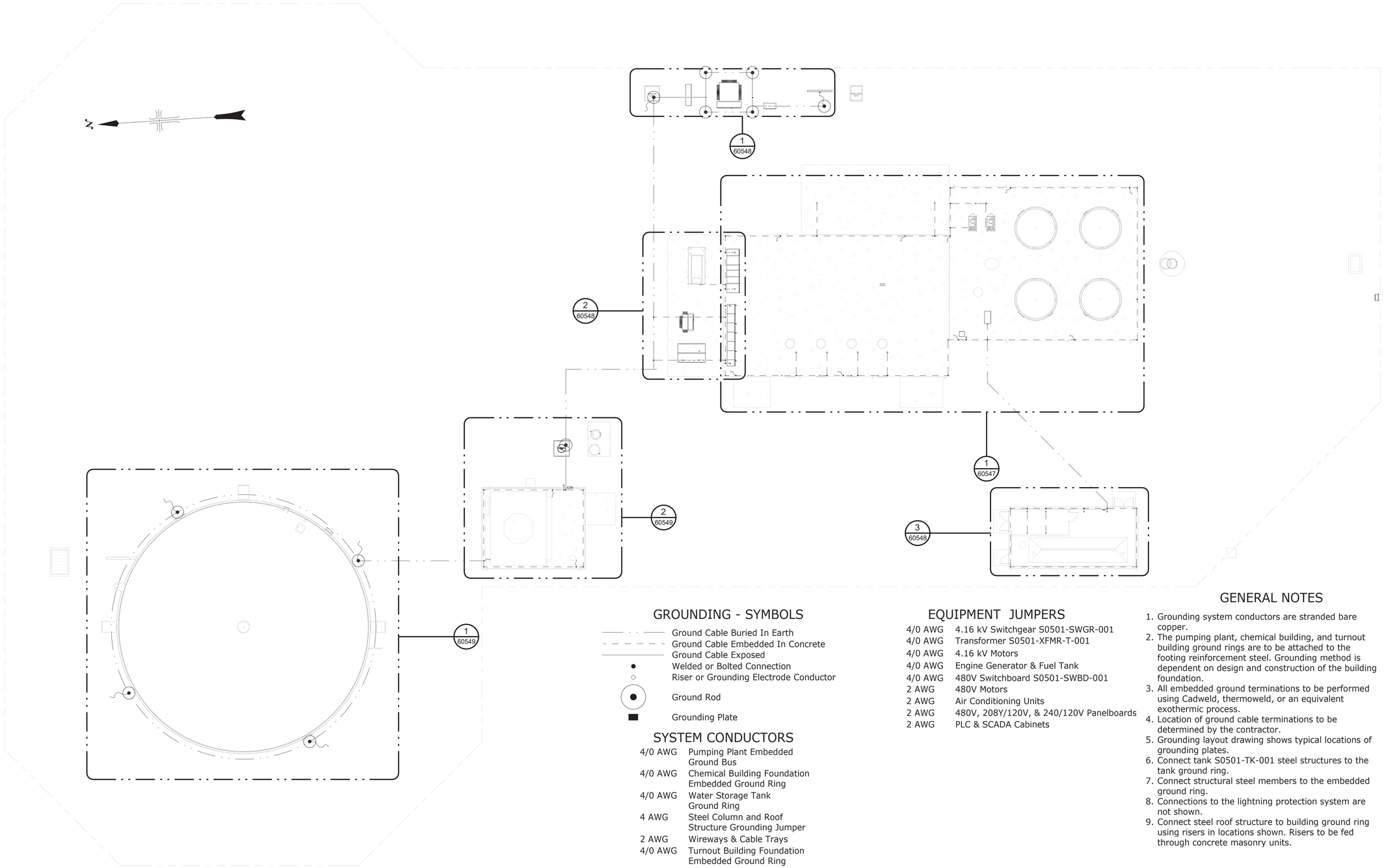

GROUNDING - SYMBOLS

- Ground Cable Buried In Earth
- Ground Cable Embedded In Concrete
- Ground Cable Exposed
- Welded or Bolted Connection
- Riser or Grounding Electrode Conductor
- Ground Rod
- Grounding Plate

SYSTEM CONDUCTORS

4/0 AWG	Pumping Plant Embedded Ground Bus
4/0 AWG	Chemical Building Foundation Embedded Ground Ring
4/0 AWG	Water Storage Tank Ground Ring
4 AWG	Steel Column and Roof Structure Grounding Jumper
2 AWG	Wireways & Cable Trays
4/0 AWG	Turnout Building Foundation Embedded Ground Ring

EQUIPMENT JUMPERS

4/0 AWG	4.16 kV Switchgear S0501-SWGR-001
4/0 AWG	Transformer S0501-XFMR-T-001
4/0 AWG	4.16 kV Motors
4/0 AWG	Engine Generator & Fuel Tank
4/0 AWG	480V Switchboard S0501-SWBD-001
2 AWG	480V Motors
2 AWG	Air Conditioning Units
2 AWG	480V, 208Y/120V, & 240/120V Panelboards
2 AWG	PLC & SCADA Cabinets

GENERAL NOTES

1. Grounding system conductors are stranded bare copper.
2. The pumping plant, chemical building, and turnout building ground rings are to be attached to the footing reinforcement steel. Grounding method is dependent on design and construction of the building foundation.
3. All embedded ground terminations to be performed using Cadweld, thermoweld, or an equivalent exothermic process.
4. Location of ground cable terminations to be determined by the contractor.
5. Grounding layout drawing shows typical locations of grounding plates.
6. Connect tank S0501-TK-001 steel structures to the tank ground ring.
7. Connect structural steel members to the embedded ground ring.
8. Connections to the lightning protection system are not shown.
9. Connect steel roof structure to building ground ring using risers in locations shown. Risers to be fed through concrete masonry units.

GROUNDING PLAN - SITE

Scale: 1/16" = 1'-0"

0 8' 16' 32'

RECLAMATION
Managing Water in the West

ALWAYS THINK **SAFETY**

U.S. DEPARTMENT OF THE INTERIOR
BUREAU OF RECLAMATION

NAVAJO GALLUP WATER SUPPLY PROJECT
NEW MEXICO

SAN JUAN LATERAL
PUMPING PLANT NOS. 4 AND 7

Darryl Liscomb
DESIGNED
Darryl Liscomb
DRAWN
Robert D. Cass
CHECKED
TECH. APPR. Lisa Gentry, P.E.
APPROVED Jay Boggess
Peer Reviewer - Manager, Electrical Design Group

DENVER, CO 2020-01-24

ELECTRICAL INSTALLATION

GROUNDING PLAN - PUMPING PLANT NO. 4 SITE

1695-D-60545

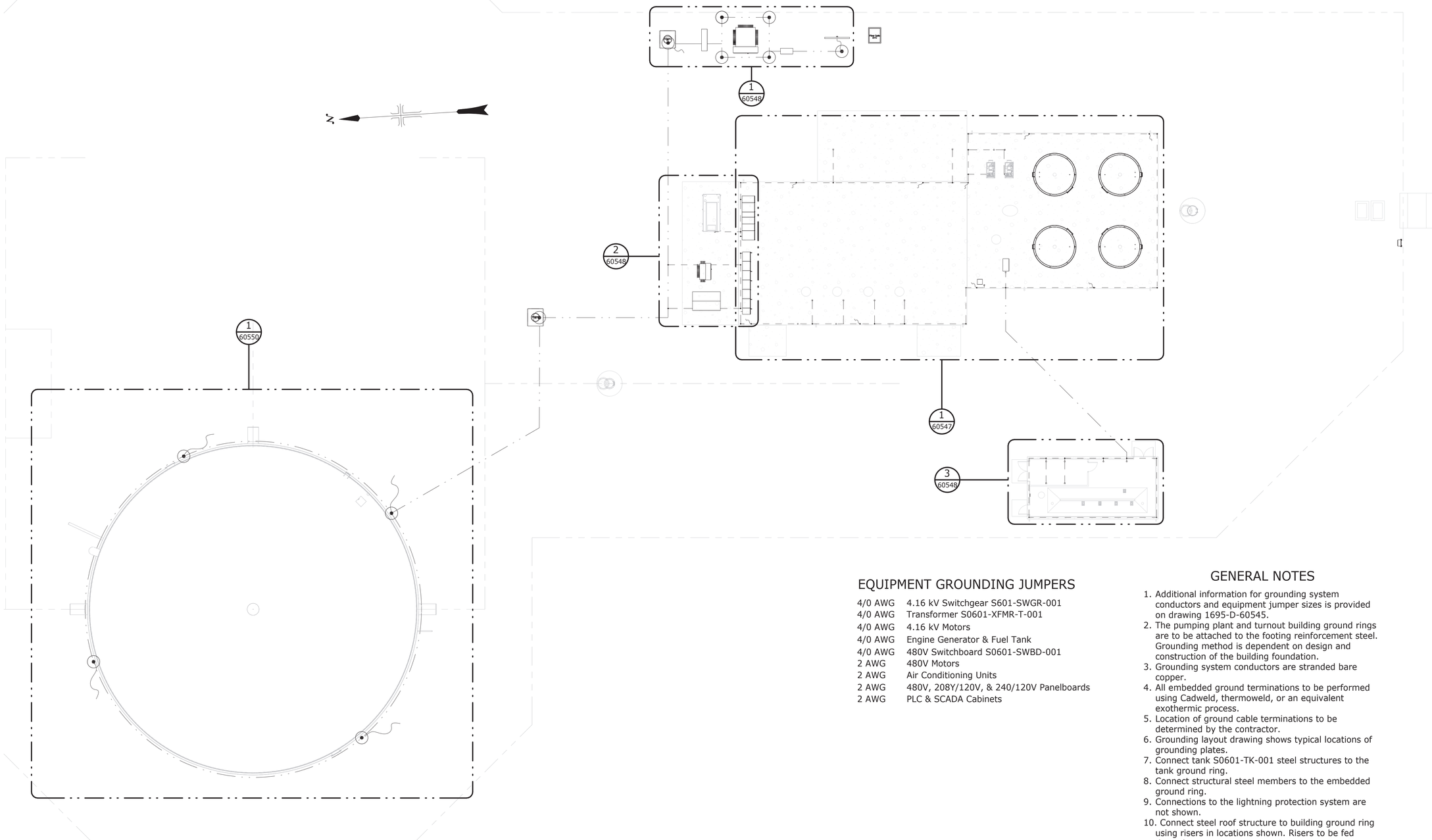

EQUIPMENT GROUNDING JUMPERS

4/0 AWG	4.16 kV Switchgear S601-SWGR-001
4/0 AWG	Transformer S0601-XFMR-T-001
4/0 AWG	4.16 kV Motors
4/0 AWG	Engine Generator & Fuel Tank
4/0 AWG	480V Switchboard S0601-SWBD-001
2 AWG	480V Motors
2 AWG	Air Conditioning Units
2 AWG	480V, 208Y/120V, & 240/120V Panelboards
2 AWG	PLC & SCADA Cabinets

GENERAL NOTES

1. Additional information for grounding system conductors and equipment jumper sizes is provided on drawing 1695-D-60545.
2. The pumping plant and turnout building ground rings are to be attached to the footing reinforcement steel. Grounding method is dependent on design and construction of the building foundation.
3. Grounding system conductors are stranded bare copper.
4. All embedded ground terminations to be performed using Cadweld, thermoweld, or an equivalent exothermic process.
5. Location of ground cable terminations to be determined by the contractor.
6. Grounding layout drawing shows typical locations of grounding plates.
7. Connect tank S0601-TK-001 steel structures to the tank ground ring.
8. Connect structural steel members to the embedded ground ring.
9. Connections to the lightning protection system are not shown.
10. Connect steel roof structure to building ground ring using risers in locations shown. Risers to be fed through concrete masonry units.

GROUNDING PLAN - SITE

Scale: 1/16" = 1'-0"

0 8' 16' 32'

RECLAMATION
Managing Water in the West

ALWAYS THINK **SAFETY**

U.S. DEPARTMENT OF THE INTERIOR
BUREAU OF RECLAMATION
NAVAJO GALLUP WATER SUPPLY PROJECT
NEW MEXICO

SAN JUAN LATERAL
PUMPING PLANT NOS. 4 AND 7

Darryl Liscomb
DESIGNED
Darryl Liscomb
DRAWN
Robert D. Cass
CHECKED
TECH. APPR. Lisa Gentry, P.E.
APPROVED Jay Boggess
Peer Reviewer - Manager, Electrical Design Group

DENVER, CO 2020-01-24

ELECTRICAL INSTALLATION

GROUNDING PLAN - PUMPING PLANT NO. 7 SITE

1695-D-60546

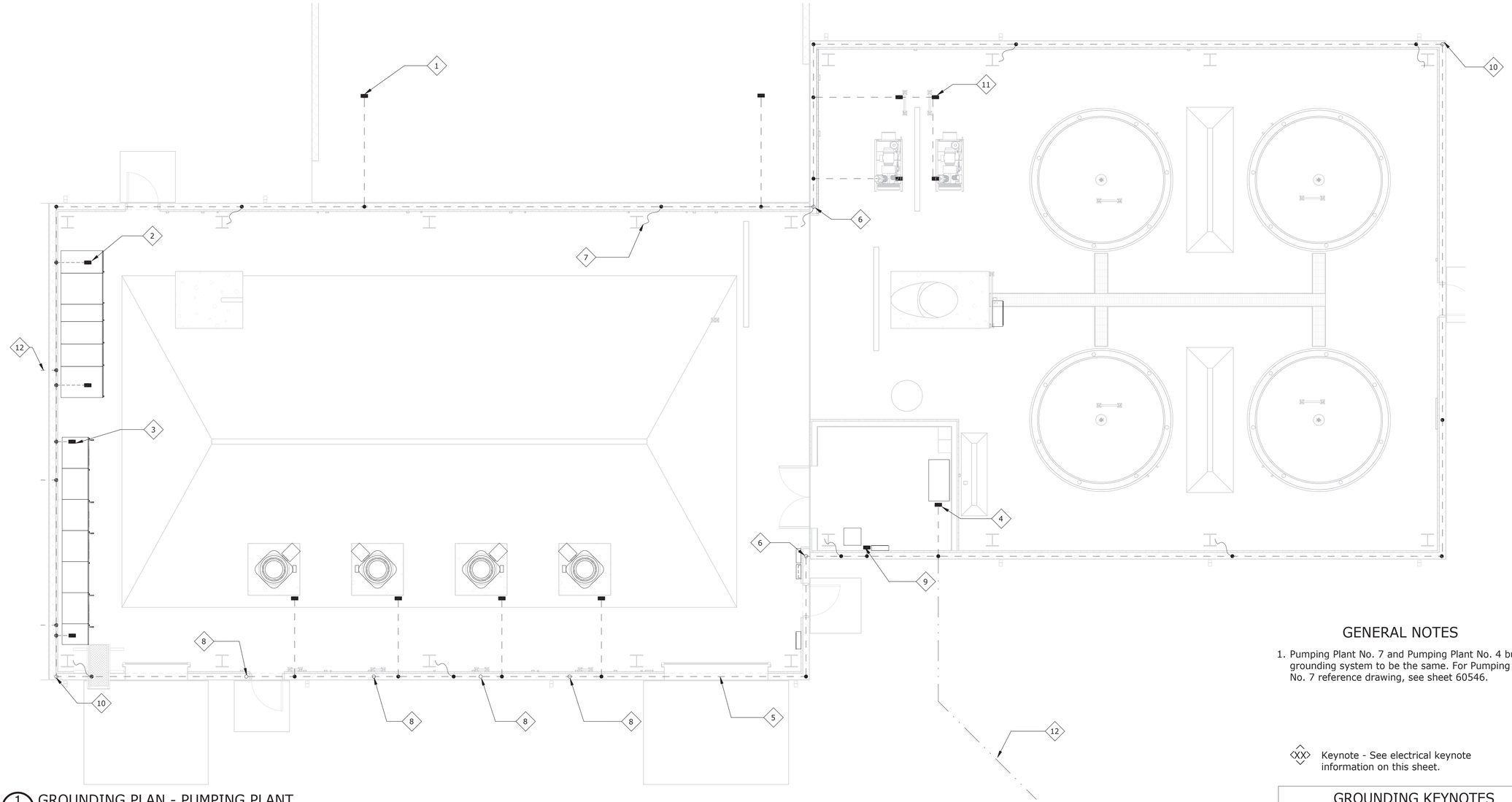

1 GROUNDING PLAN - PUMPING PLANT
60545 Scale: 3/16" = 1'-0"

0 5' 10'

GENERAL NOTES

1. Pumping Plant No. 7 and Pumping Plant No. 4 building grounding system to be the same. For Pumping Plant No. 7 reference drawing, see sheet 60546.

XX Keynote - See electrical keynote information on this sheet.

GROUNDING KEYNOTES

Key Value	Keynote Text
1	HVAC equipment grounding pad (typical).
2	Switchboard grounding pad.
3	Motor control equipment grounding pad.
4	SCADA and communication cabinet grounding pad.
5	Pumping plant embedded ground bus.
6	Riser to footing reinforcement steel and roof structural steel (typical).
7	Bare copper wire to structural steel (typical).
8	Riser to piping encasement reinforcement (typical).
9	Transformer and panelboard grounding pad.
10	Riser to footing reinforcement steel (typical).
11	Ground pad for air compressor equipment (typical).
12	Bare copper wire continued to other site features (typical).

RECLAMATION
Managing Water in the West

ALWAYS THINK **SAFETY**

U.S. DEPARTMENT OF THE INTERIOR
BUREAU OF RECLAMATION
NAVAJO GALLUP WATER SUPPLY PROJECT
NEW MEXICO
SAN JUAN LATERAL
PUMPING PLANT NOS. 4 AND 7

Darryl Liscomb
DESIGNED
Darryl Liscomb
DRAWN
Robert D. Cass
CHECKED
TECH. APPR. Lisa Gentry, P.E.
APPROVED Jay Boggess
Peer Reviewer - Manager, Electrical Design Group

DENVER, CO 2020-01-24

ELECTRICAL INSTALLATION

GROUNDING PLAN - PUMPING PLANT BUILDING

1695-D-60547

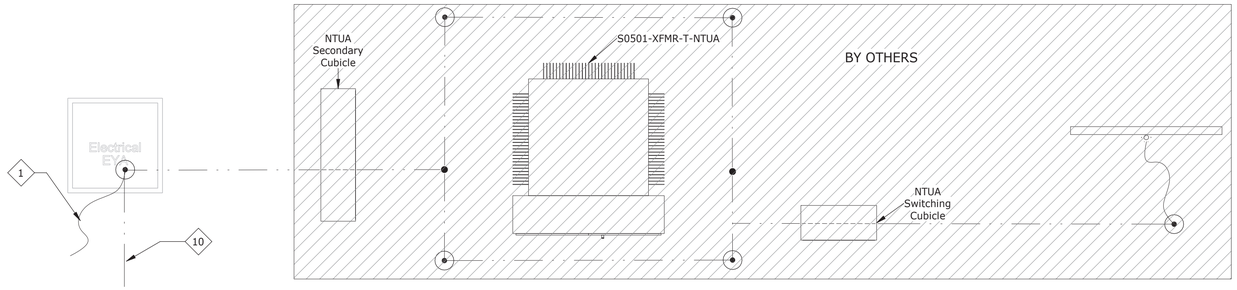

1 60545 GROUNDING PLAN - TAP STRUCTURE AND PULLBOX
Scale: 1/4" = 1'-0"

0 2' 4' 8'

GENERAL NOTES

1. Tap structure grounding system shown is estimated based on typical installations. Actual system arrangement to be determined in the field.
2. Contractor to coordinate connection to the utility supply grounding system with the COR and NTUA.
3. Pumping Plant No. 7 grounding systems to be the same as Pumping Plant No. 4 . For Pumping Plant No. 7 reference drawing, see sheet 60546.

<XX> Keynote - See electrical keynote information on this sheet.

GROUNDING KEYNOTES	
Key Value	Keynote Text
1	Bare copper wire to vault cable support equipment.
2	Engine Generator grounding pad.
3	Metal-clad switchgear grounding pad.
4	Turnout Building embedded ground bus.
5	Ground pad for future equipment. (typical)
6	Riser to footing reinforcement steel and roof structural steel (typical).
7	SCADA and communication cabinet grounding pad.
8	Turnout Building service equipment ground pad.
9	Transformer grounding pad.
10	Bare copper wire continued to other site features (typical).

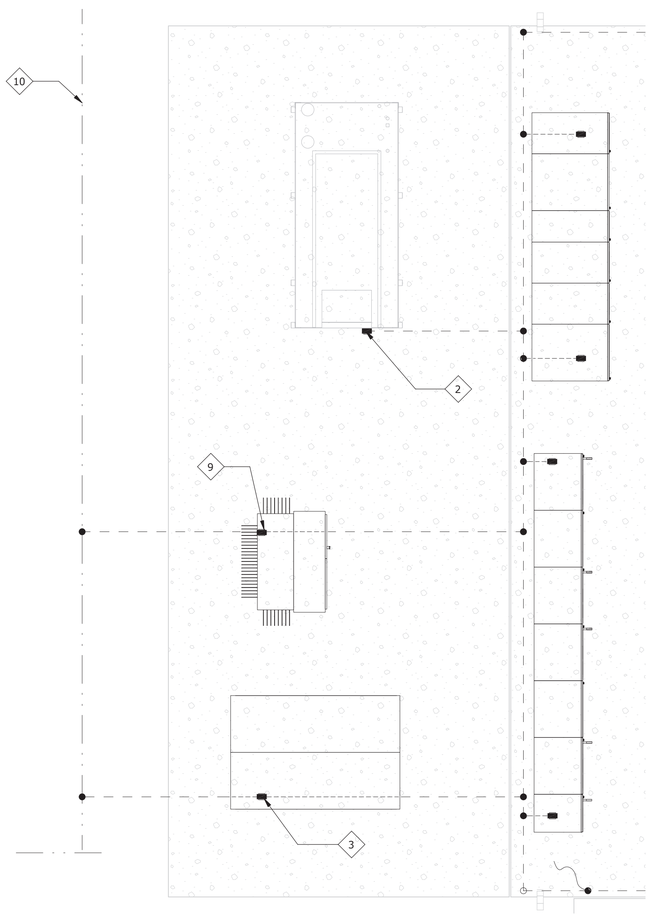

2 60545 GROUNDING PLAN - UNIT SUBSTATION AND ENGINE GENERATOR
Scale: 1/4" = 1'-0"

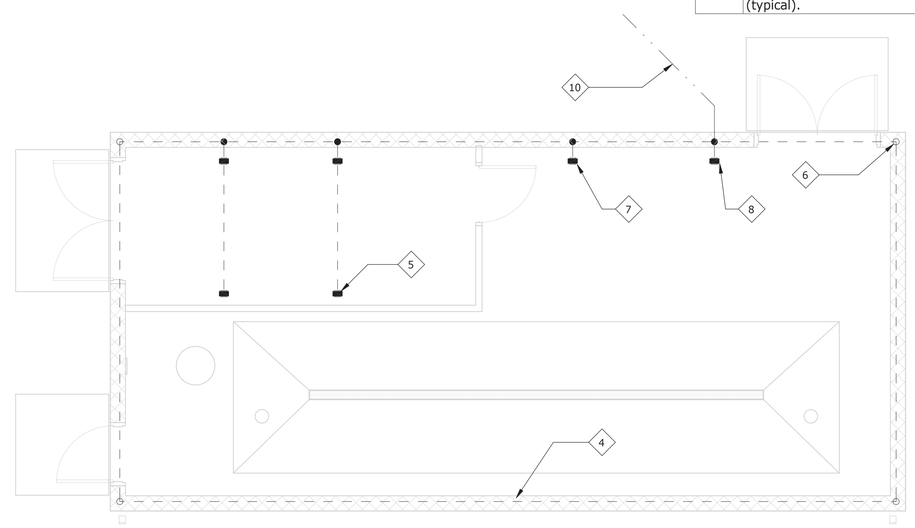

3 60545 GROUNDING PLAN - TURNOUT BUILDING
Scale: 1/4" = 1'-0"

RECLAMATION
Managing Water in the West

ALWAYS THINK SAFETY

U.S. DEPARTMENT OF THE INTERIOR
BUREAU OF RECLAMATION
NAVAJO GALLUP WATER SUPPLY PROJECT
NEW MEXICO

SAN JUAN LATERAL
PUMPING PLANT NOS. 4 AND 7

Darryl Liscomb
DESIGNED
Darryl Liscomb
DRAWN
Robert D. Cass
CHECKED
TECH. APPR. Lisa Gentry, P.E.
APPROVED Jay Boggess
Peer Reviewer - Manager, Electrical Design Group

DENVER, CO 2020-01-24

ELECTRICAL INSTALLATION

GROUNDING PLAN - TAP STRUCTURE, UNIT SUBSTATION AND TURNOUT BUILDING

1695-D-60548

Keynote - See electrical keynote information on this sheet.

GROUNDING KEYNOTES	
Key Value	Keynote Text
1	Chemical Building embedded ground bus.
2	Chemical Building service equipment grounding pad.
3	Riser to footing reinforcement steel and roof structural steel (typical).
4	Bare copper wire to structural steel (typical).
5	Tank buried ground ring.
6	Bare copper wire to tank steel structure.
7	Bare copper wire to vault cable support equipment.
8	Bare copper wire continued to other site features (typical).

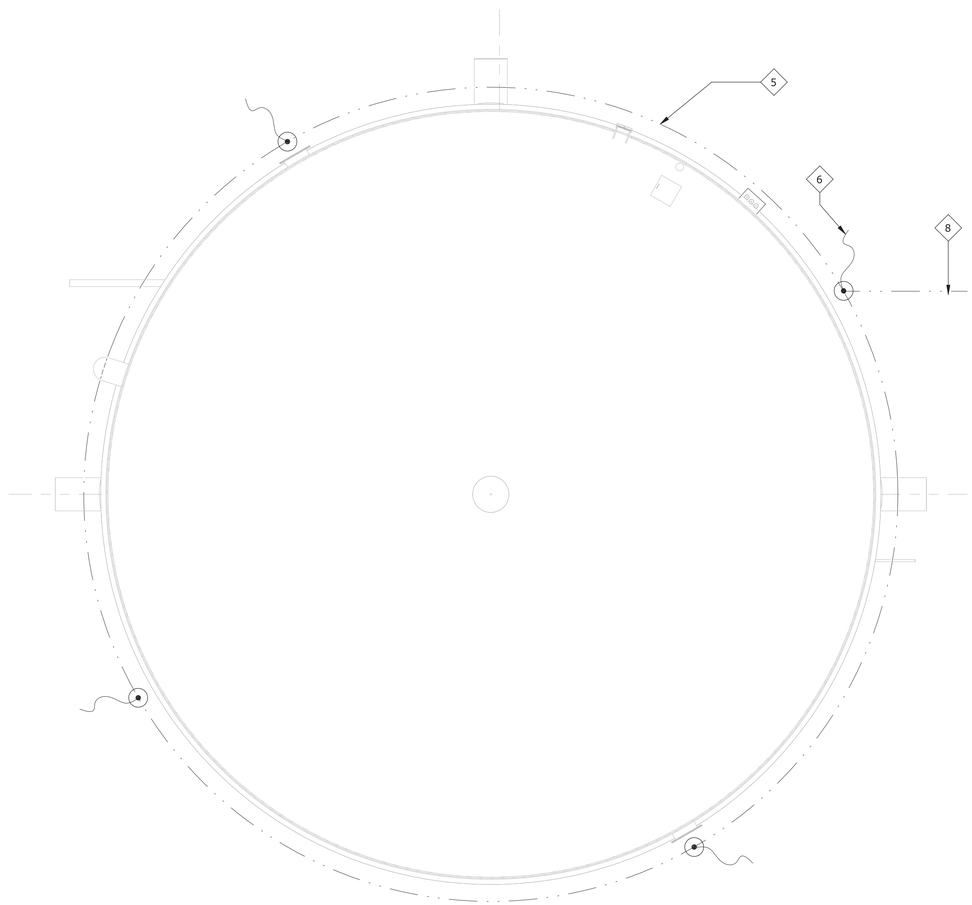

1 GROUNDING PLAN - STORAGE TANK
60545 Scale: 1/8" = 1'-0"

0 4' 8' 16'

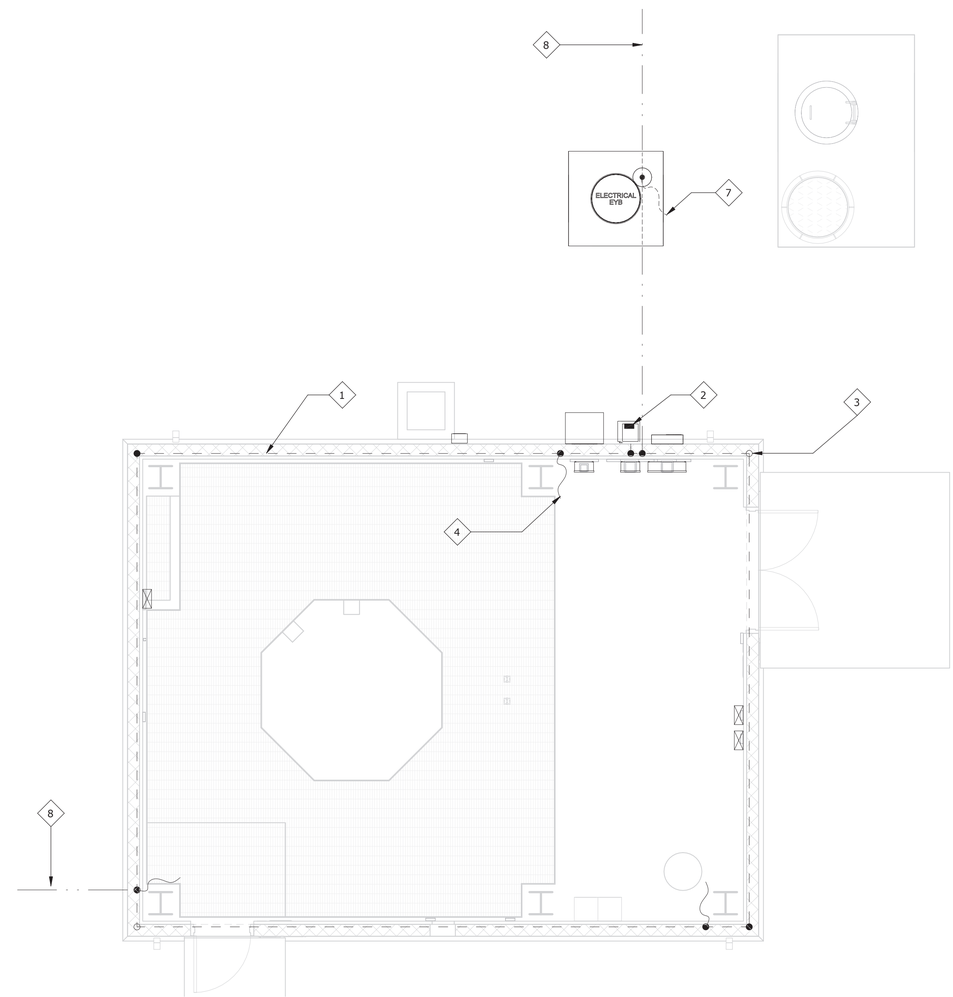

2 GROUNDING PLAN - CHEMICAL BUILDING
60545 Scale: 1/4" = 1'-0"

0 2' 4' 8'

RECLAMATION
Managing Water in the West

ALWAYS THINK **SAFETY**

U.S. DEPARTMENT OF THE INTERIOR
BUREAU OF RECLAMATION
NAVAJO GALLUP WATER SUPPLY PROJECT
NEW MEXICO

SAN JUAN LATERAL
PUMPING PLANT NOS. 4 AND 7

Darryl Liscomb
DESIGNED
Darryl Liscomb
DRAWN
Robert D. Cass
CHECKED
TECH. APPR. Lisa Gentry, P.E.
APPROVED Jay Boggess
Peer Reviewer - Manager, Electrical Design Group

DENVER, CO 2020-01-24

ELECTRICAL INSTALLATION

GROUNDING PLAN - PUMPING PLANT NO. 4 STORAGE TANK AND CHEMICAL BUILDING

1695-D-60549

RECLAMATION
Managing Water in the West

KEYNOTE - LEGEND

XX Keynote - See electrical keynote information on this sheet.

GROUNDING KEYNOTES	
Key Value	Keynote Text
1	Bare copper wire to tank steel structure.
2	Tank buried ground ring.
3	Bare copper wire continued to other site features (typical).

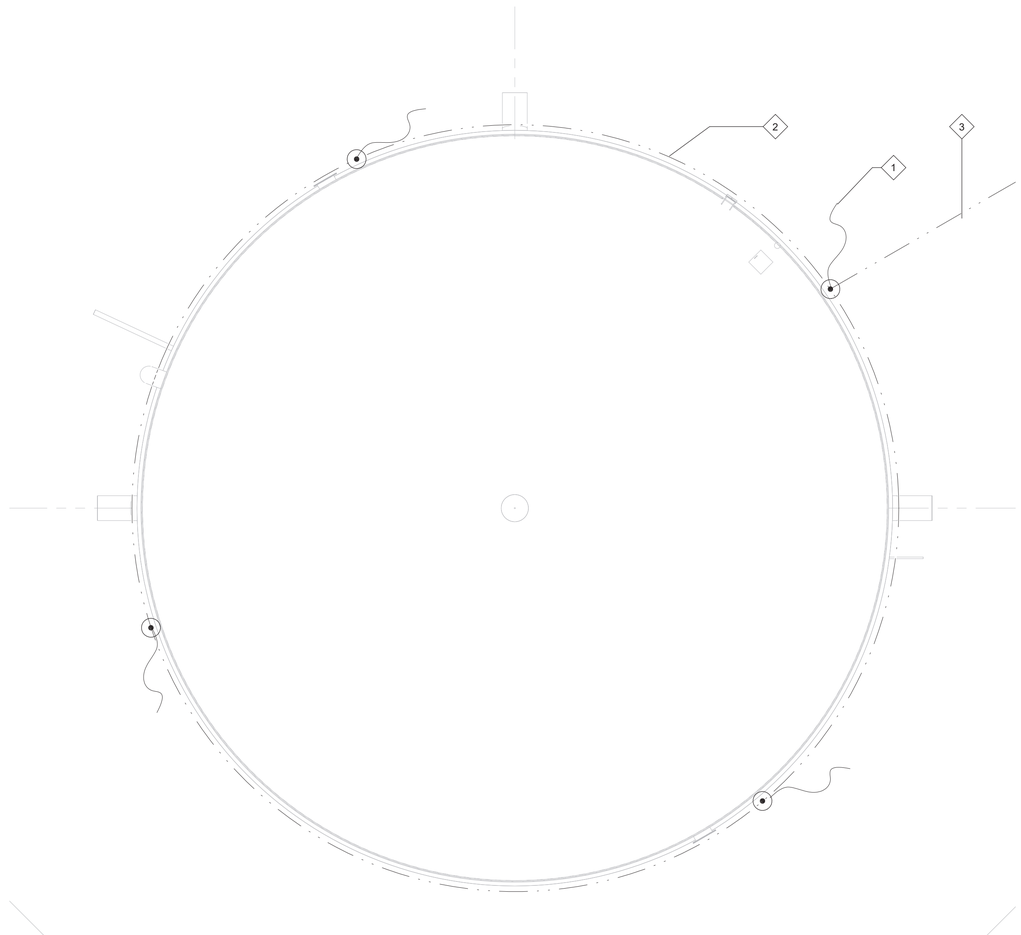

1 / 60546 GROUNDING PLAN - STORAGE TANK
Scale: 3/32" = 1'-0"

0 10' 20'

ALWAYS THINK **SAFETY**

U.S. DEPARTMENT OF THE INTERIOR
BUREAU OF RECLAMATION
NAVAJO GALLUP WATER SUPPLY PROJECT
NEW MEXICO

SAN JUAN LATERAL
PUMPING PLANT NOS. 4 AND 7

Darryl Liscomb
DESIGNED
Darryl Liscomb
DRAWN
Robert D. Cass
CHECKED
TECH. APPR. Lisa Gentry, P.E.
APPROVED Jay Boggess
Peer Reviewer - Manager, Electrical Design Group

DENVER, CO 2020-01-24

ELECTRICAL INSTALLATION

GROUNDING PLAN - PUMPING PLANT NO. 7 STORAGE TANK

1695-D-60550

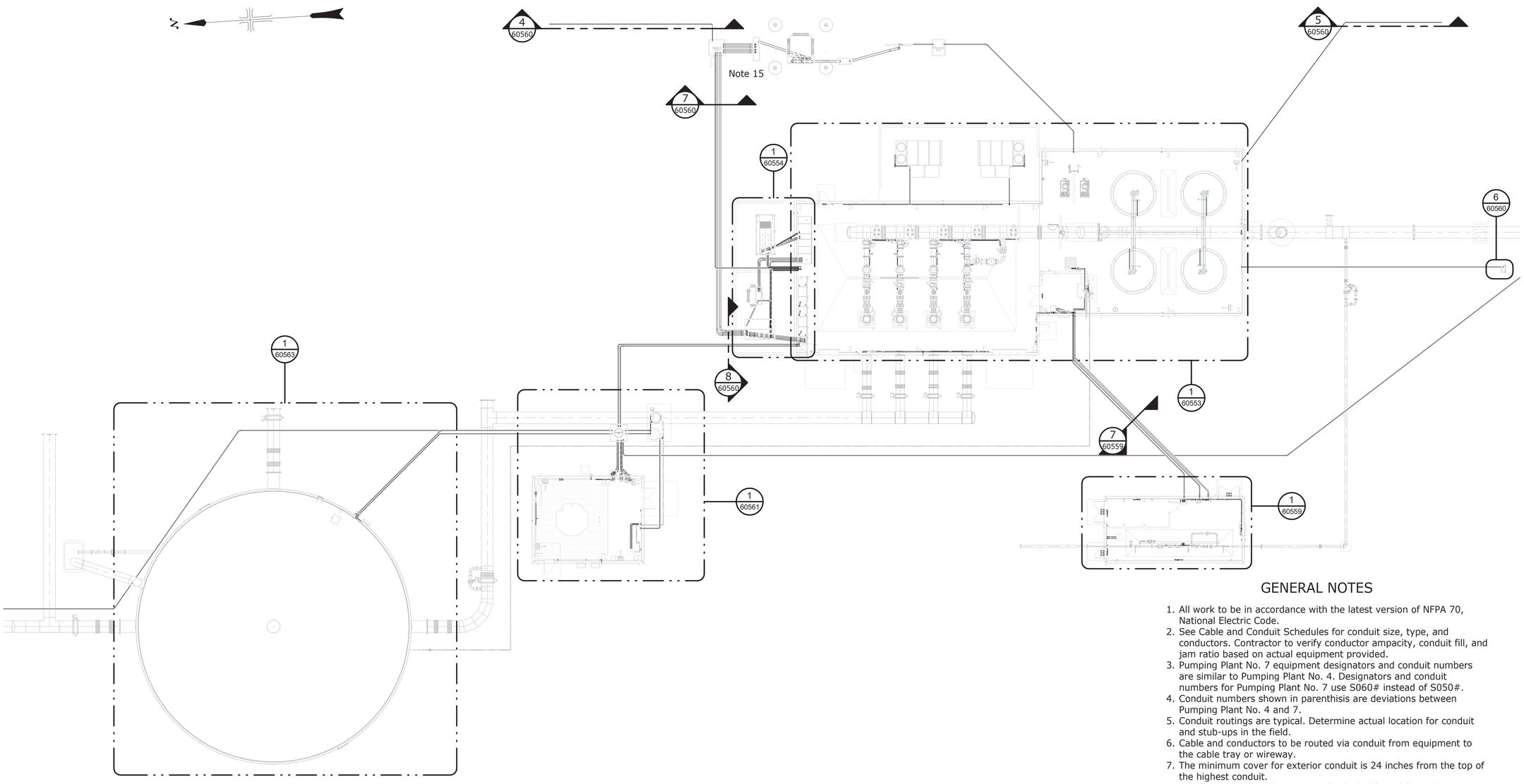

CONDUIT PLAN - SITE

Scale: 1/16" = 1'-0"

0 8' 16' 32'

GENERAL NOTES

1. All work to be in accordance with the latest version of NFPA 70, National Electric Code.
2. See Cable and Conduit Schedules for conduit size, type, and conductors. Contractor to verify conductor ampacity, conduit fill, and jam ratio based on actual equipment provided.
3. Pumping Plant No. 7 equipment designators and conduit numbers are similar to Pumping Plant No. 4. Designators and conduit numbers for Pumping Plant No. 7 use S060# instead of S050#.
4. Conduit numbers shown in parenthisis are deviations between Pumping Plant No. 4 and 7.
5. Conduit routings are typical. Determine actual location for conduit and stub-ups in the field.
6. Cable and conductors to be routed via conduit from equipment to the cable tray or wireway.
7. The minimum cover for exterior conduit is 24 inches from the top of the highest conduit.
8. Coordinate conduit placement under/in building slabs with piping systems.
9. Lighting system conduit (conduit tag "L&R") shown as an example only. Cable and conduit routing to be determined in the field.
10. Heating and ventilation system cable and conduit shown as an example only.
11. Communication equipment conduit is not shown. Route communication conductors via cable tray, raceway channel, or conduit.
12. Security and Fire protection system conductors to be installed in separate dedicated conduits.
13. Buried conduit to be schedule 80 PVC.
14. Exposed conduit to be rigid metallic conduit (RMC) except in the Chemical Building where the conduit will be plastic coated rigid steel (PRCS).
15. Coordinate conduit installation between pull box EYA and the NTUA Secondary Cubicle with the COR and NTUA.

RECLAMATION
Managing Water in the West

ALWAYS THINK **SAFETY**

U.S. DEPARTMENT OF THE INTERIOR
BUREAU OF RECLAMATION
NAVAJO GALLUP WATER SUPPLY PROJECT
NEW MEXICO

SAN JUAN LATERAL
PUMPING PLANT NOS. 4 AND 7

DESIGNED	Darryl Liscomb
DRAWN	Darryl Liscomb
CHECKED	Robert D. Cass
TECH. APPR.	Lisa Gentry, P.E.
APPROVED (Peer Reviewer - Manager, Electrical Design Group)	Jay Boogess
DENVER, CO	2020-01-24

ELECTRICAL INSTALLATION

CONDUIT PLAN - PUMPING PLANT NO. 4 SITE

1695-D-60551

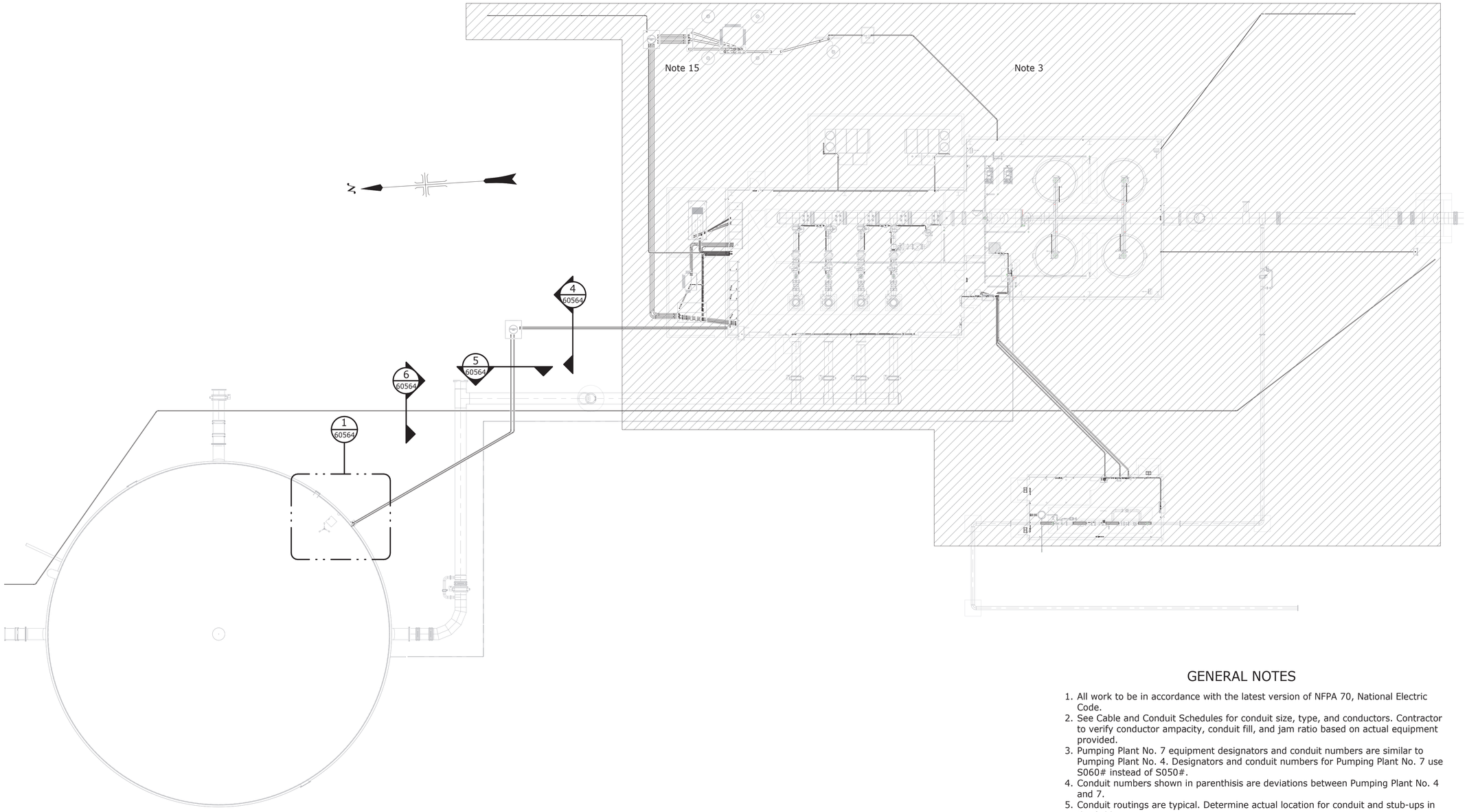

CONDUIT PLAN - PUMPING PLANT NO. 7 SITE

Scale: 1/16" = 1'-0"

0 8' 16' 32'

GENERAL NOTES

1. All work to be in accordance with the latest version of NFPA 70, National Electric Code.
2. See Cable and Conduit Schedules for conduit size, type, and conductors. Contractor to verify conductor ampacity, conduit fill, and jam ratio based on actual equipment provided.
3. Pumping Plant No. 7 equipment designators and conduit numbers are similar to Pumping Plant No. 4. Designators and conduit numbers for Pumping Plant No. 7 use S060# instead of S050#.
4. Conduit numbers shown in parenthisis are deviations between Pumping Plant No. 4 and 7.
5. Conduit routings are typical. Determine actual location for conduit and stub-ups in the field.
6. Cable and conductors to be routed via conduit from equipment to the cable tray or wireway.
7. The minimum cover for exterior conduit is 24 inches from the top of the highest conduit.
8. Coordinate conduit placement under/in building slabs with piping systems.
9. Lighting system conduit (conduit tag "L&R") shown as an example only. Cable and conduit routing to be determined in the field.
10. Heating and ventilation system cable and conduit shown as an example only.
11. Communication equipment conduit is not shown. Route communication conductors via cable tray, raceway channel, or conduit.
12. Security and Fire protection system conductors to be installed in separate dedicated conduits.
13. Buried conduit to be schedule 80 PVC.
14. Exposed conduit to be rigid metallic conduit (RMC).
15. Coordinate conduit installation between pull box EYA and the NTUA Secondary Cubicle with the COR and NTUA.

RECLAMATION
Managing Water in the West

ALWAYS THINK **SAFETY**

U.S. DEPARTMENT OF THE INTERIOR
BUREAU OF RECLAMATION
NAVAJO GALLUP WATER SUPPLY PROJECT
NEW MEXICO
SAN JUAN LATERAL
PUMPING PLANT NOS. 4 AND 7

DESIGNED	Darryl Liscomb
DRAWN	Darryl Liscomb
CHECKED	Robert D. Cass
TECH. APPR.	Lisa Gentry, P.E.
APPROVED	Jay Boggess Peer Reviewer - Manager, Electrical Design Group
DENVER, CO	2020-01-24

ELECTRICAL INSTALLATION

CONDUIT PLAN - PUMPING PLANT NO. 7 SITE

1695-D-60552

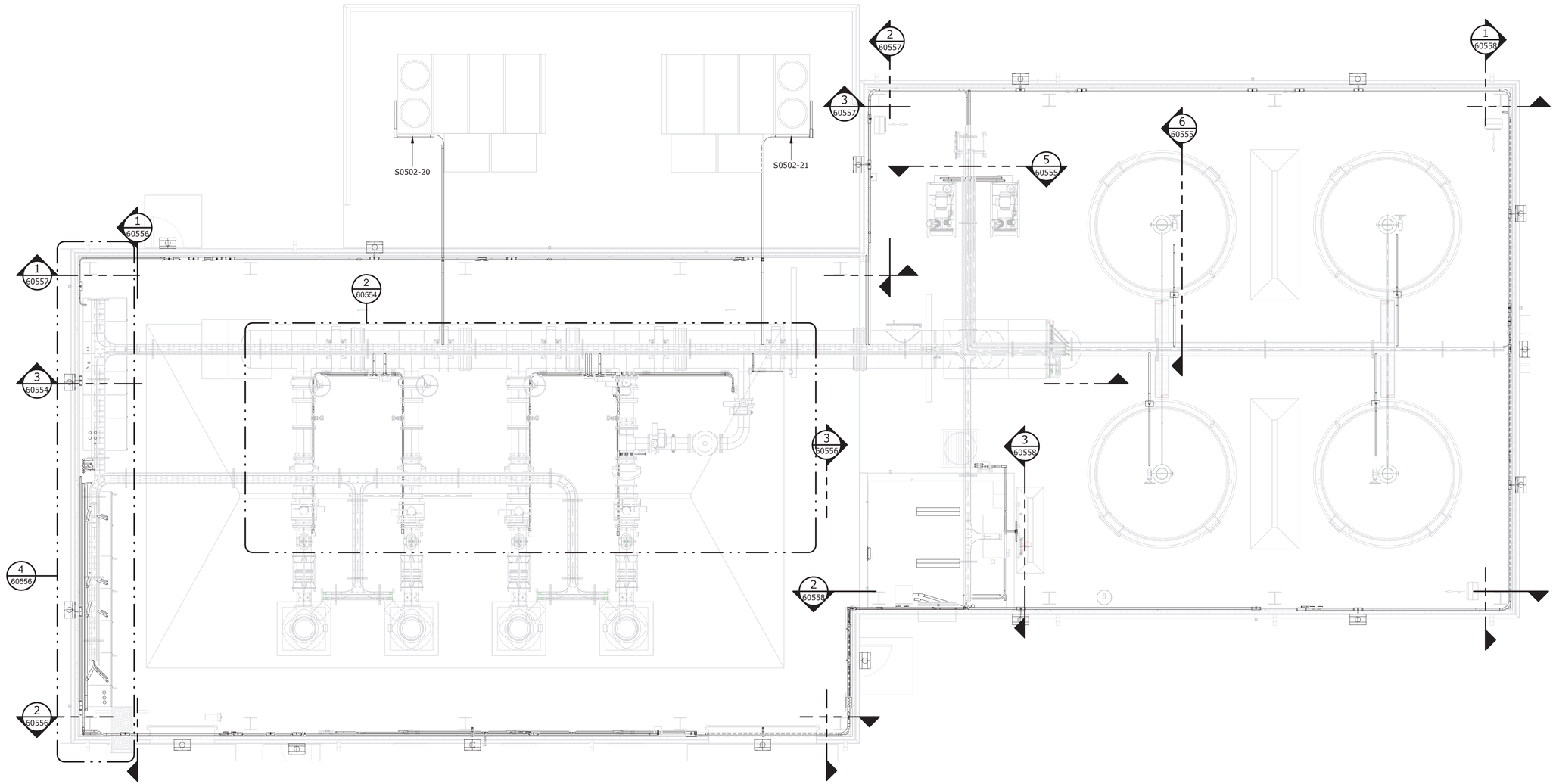

1 60551 CONDUIT PLAN - PUMPING PLANT

Scale: 3/16" = 1'-0"

0 5' 10'

RECLAMATION
Managing Water in the West

ALWAYS THINK **SAFETY**

U.S. DEPARTMENT OF THE INTERIOR
BUREAU OF RECLAMATION

NAVAJO GALLUP WATER SUPPLY PROJECT
NEW MEXICO

SAN JUAN LATERAL
PUMPING PLANT NOS. 4 AND 7

Darryl Liscomb
DESIGNED
Darryl Liscomb
DRAWN
Robert D. Cass
CHECKED
TECH. APPR. Lisa Gentry, P.E.
APPROVED Jay Boggess
Peer Reviewer - Manager, Electrical Design Group

DENVER, CO 2020-01-24

ELECTRICAL INSTALLATION

CONDUIT PLAN - PUMPING PLANT BUILDING

1695-D-60553

RECLAMATION
Managing Water in the West

CONDUIT - UNIT PIPING

1. Conduit routings are typical. Determine actual location for conduit in the field.
2. Provide support for conduit along length of unit pipe as required using unistrut and/or pipe flange supports.
3. Connection to equipment to be performed using liquidtight metal flexible conduit (not shown).

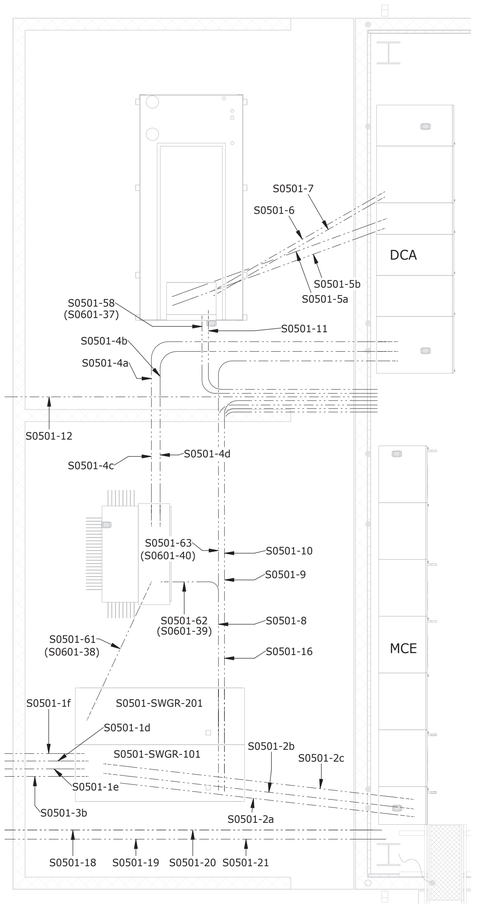

1 60551 CONDUIT PLAN - OUTDOOR SWITCHGEAR
Scale: 1/4" = 1'-0"

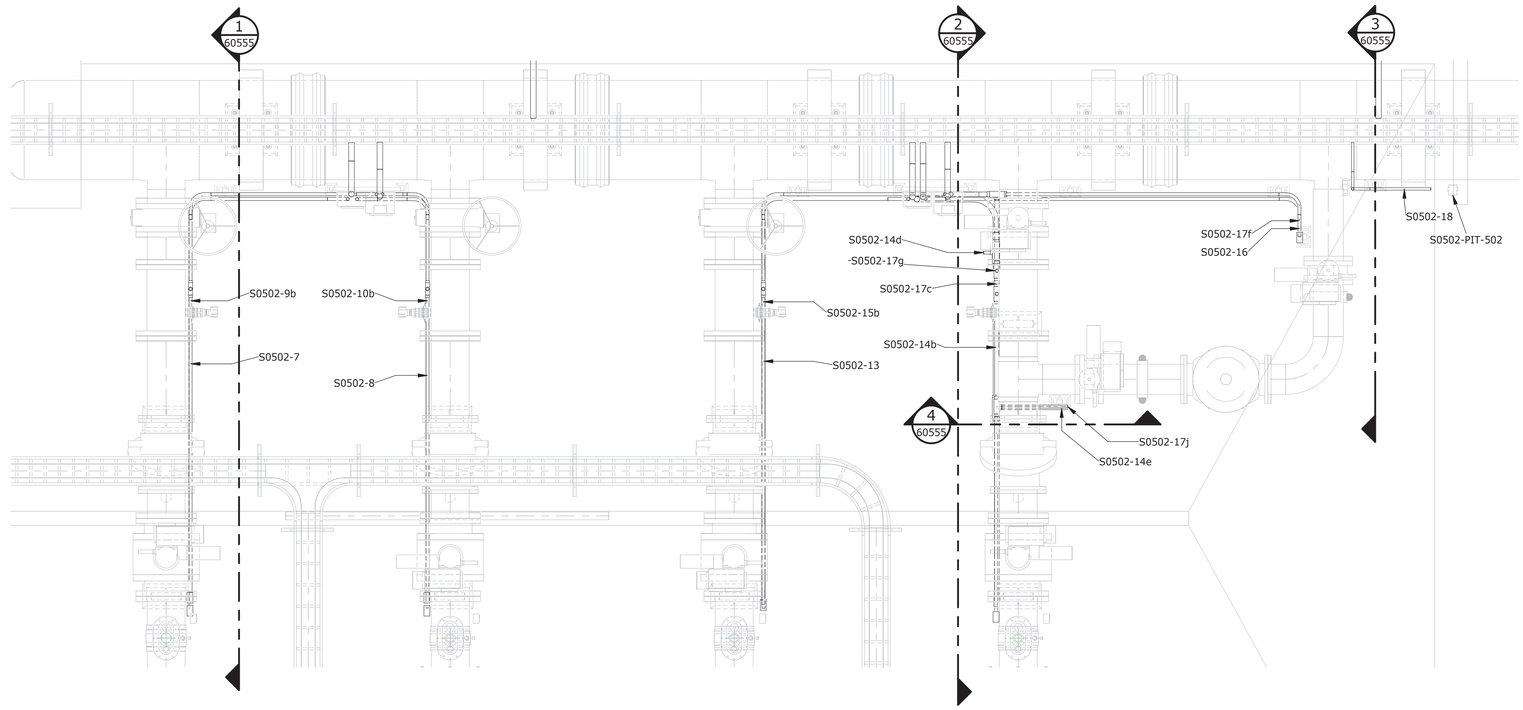

2 60553 CONDUIT PLAN - UNIT PIPING EQUIPMENT
Scale: 3/8" = 1'-0"

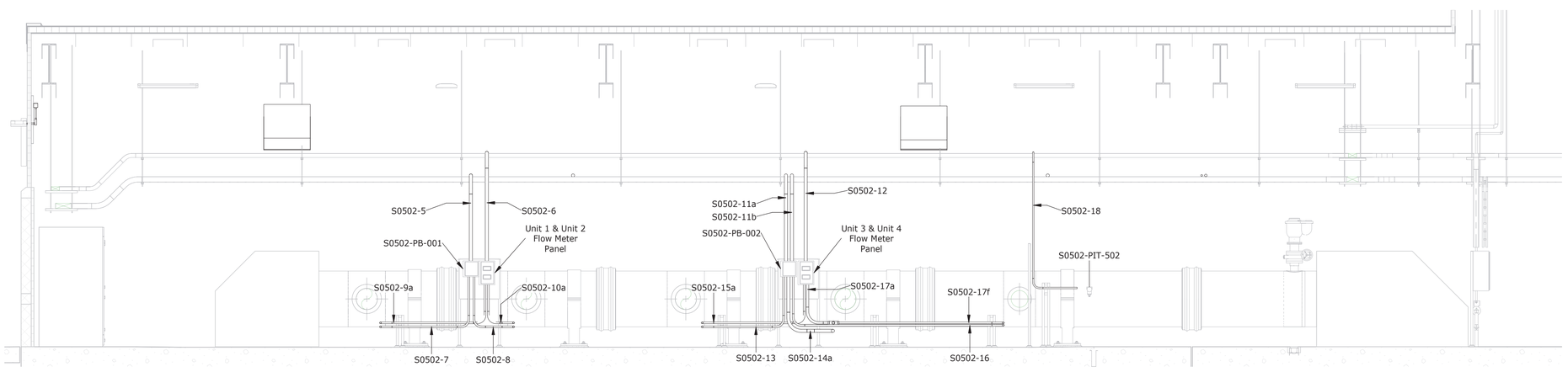

3 60553 DISCHARGE MANIFOLD CONDUIT
Scale: 1/4" = 1'-0"

ALWAYS THINK **SAFETY**

U.S. DEPARTMENT OF THE INTERIOR
BUREAU OF RECLAMATION

NAVAJO GALLUP WATER SUPPLY PROJECT
NEW MEXICO

SAN JUAN LATERAL
PUMPING PLANT NOS. 4 AND 7

Darryl Liscomb DESIGNED	
Darryl Liscomb DRAWN	
Robert D. Cass CHECKED	
TECH. APPR.	Lisa Gentry, P.E.
APPROVED Peer Reviewer - Manager, Electrical Design Group	Jay Boggess
DENVER, CO	2020-01-24

ELECTRICAL INSTALLATION

CONDUIT PLAN AND SECTION - PUMPING PLANT BUILDING

1695-D-60554

RECLAMATION
Managing Water in the West

CONDUIT - UNIT PIPING

1. Conduit routings are typical. Determine actual location for conduit in the field.
2. Provide support for conduit along length of unit pipe as required using unistrut and/or pipe flange supports.
3. Connection to equipment to be performed using liquidtight metal flexible conduit (not shown).

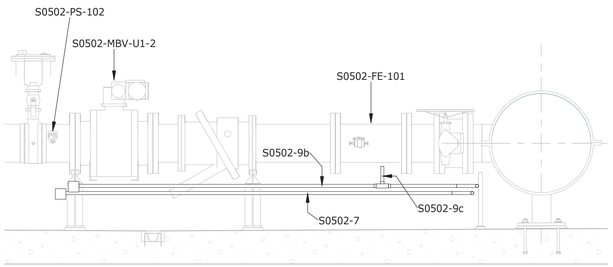

1 60554 CONDUIT SECTION - UNIT 1 (TYP. UNIT 2 & 3)
Scale: 3/8" = 1'-0"

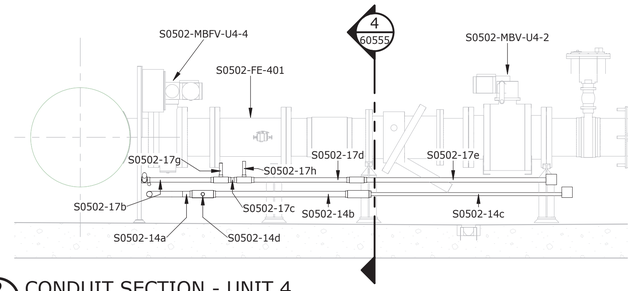

2 60554 CONDUIT SECTION - UNIT 4
Scale: 3/8" = 1'-0"

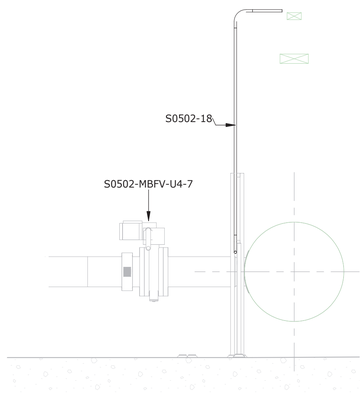

3 60554 CONDUIT SECTION - S0502-PIT-502
Scale: 3/8" = 1'-0"

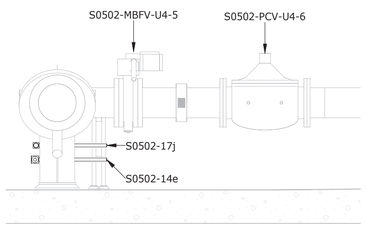

4 60554 CONDUIT SECTION - UNIT 4
Scale: 3/8" = 1'-0"

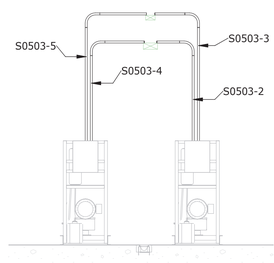

5 60553 CONDUIT SECTION - AIR COMPRESSORS
Scale: 1/4" = 1'-0"
0 2' 4' 8'

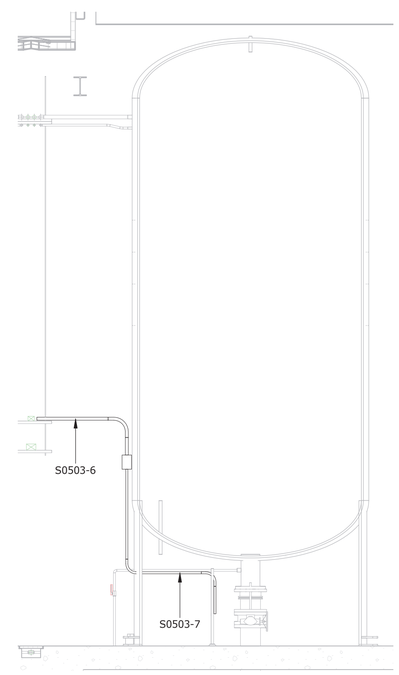

6 60553 CONDUIT SECTION - AIR CHAMBER TYP.
Scale: 1/4" = 1'-0"

ALWAYS THINK **SAFETY**

U.S. DEPARTMENT OF THE INTERIOR
BUREAU OF RECLAMATION
NAVAJO GALLUP WATER SUPPLY PROJECT
NEW MEXICO
SAN JUAN LATERAL
PUMPING PLANT NOS. 4 AND 7

Darryl Liscomb
DESIGNED
Darryl Liscomb
DRAWN
Robert D. Cass
CHECKED
TECH. APPR. Lisa Gentry, P.E.
APPROVED Jay Boggess
Peer Reviewer - Manager, Electrical Design Group

DENVER, CO 2020-01-24

ELECTRICAL INSTALLATION

CONDUIT SECTIONS - UNIT PIPING AND AIR CHAMBER EQUIPMENT

1695-D-60555

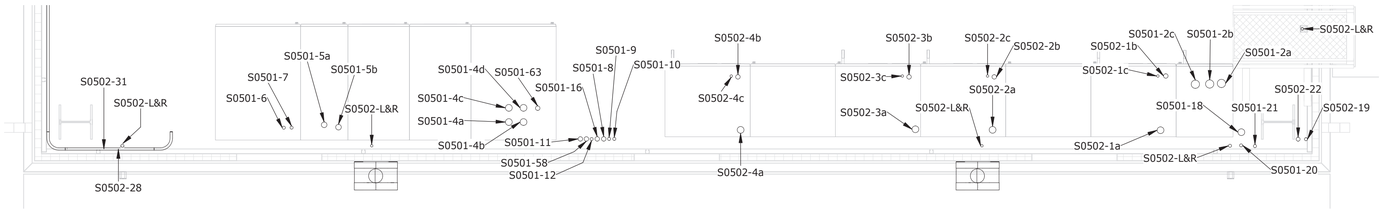

4 60553 CONDUIT PLAN - PUMP ROOM NORTH WALL VERTICAL CONDUIT RUNS

Scale: 3/8" = 1'-0"

0 2' 4' 6'

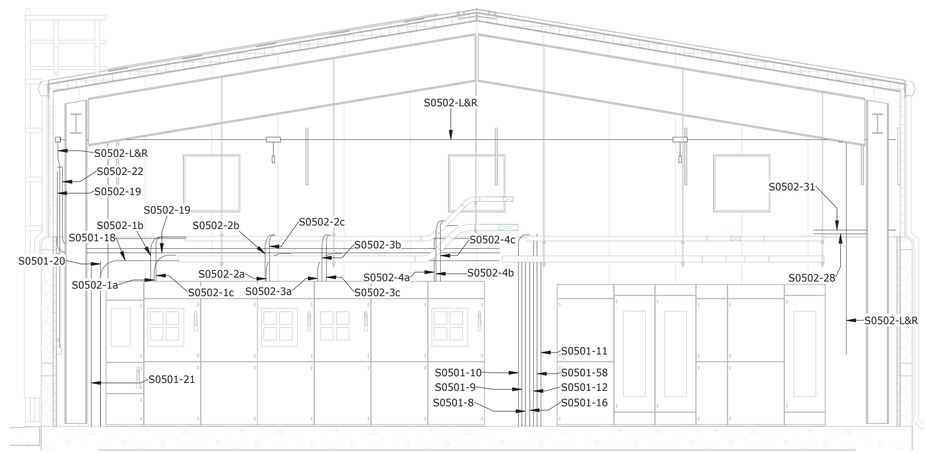

1 60553 CONDUIT SECTION - PUMP ROOM NORTH WALL

Scale: 1/4" = 1'-0"

0 2' 4' 8'

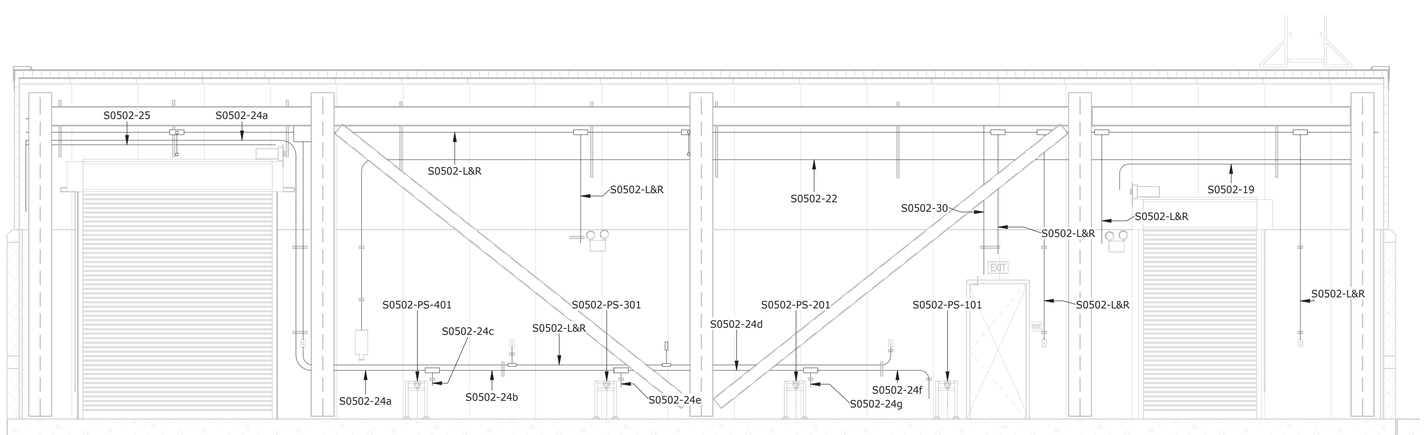

2 60553 CONDUIT SECTION - PUMP ROOM WEST WALL

Scale: 1/4" = 1'-0"

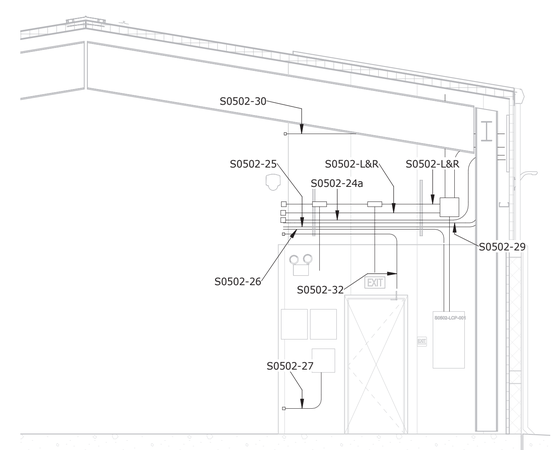

3 60553 CONDUIT SECTION - PUMP ROOM SOUTH WALL

Scale: 1/4" = 1'-0"

RECLAMATION
Managing Water in the West

ALWAYS THINK **SAFETY**

U.S. DEPARTMENT OF THE INTERIOR
BUREAU OF RECLAMATION
NAVAJO GALLUP WATER SUPPLY PROJECT
NEW MEXICO

SAN JUAN LATERAL
PUMPING PLANT NOS. 4 AND 7

Darryl Liscomb
DESIGNED
Darryl Liscomb
DRAWN
Robert D. Cass
CHECKED
TECH. APPR. Lisa Gentry, P.E.
APPROVED Jay Boggess
Peer Reviewer - Manager, Electrical Design Group

DENVER, CO 2020-01-24

ELECTRICAL INSTALLATION

CONDUIT PLAN AND SECTIONS - PUMP ROOM

1695-D-60556

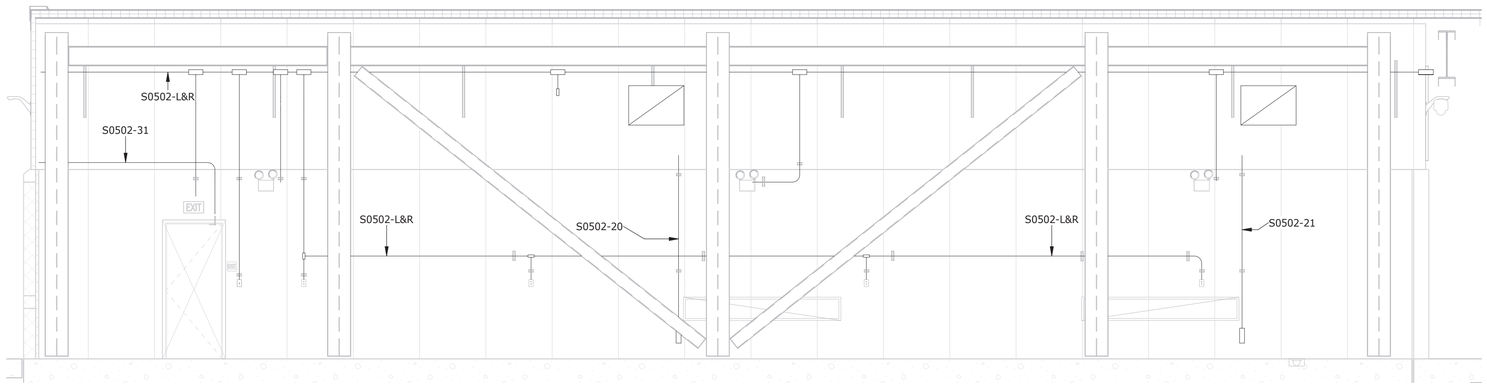

1 60553 CONDUIT SECTION - PUMP ROOM EAST WALL
Scale: 1/4" = 1'-0"

0 2' 4' 8'

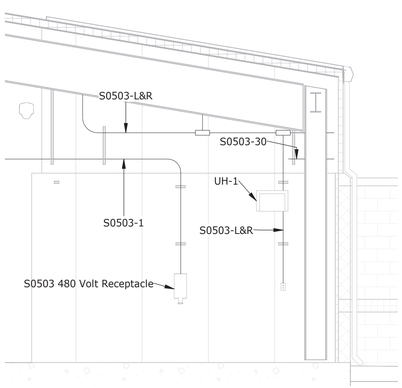

2 60553 CONDUIT SECTION - AIR CHAMBER ROOM NORTH WALL
Scale: 1/4" = 1'-0"

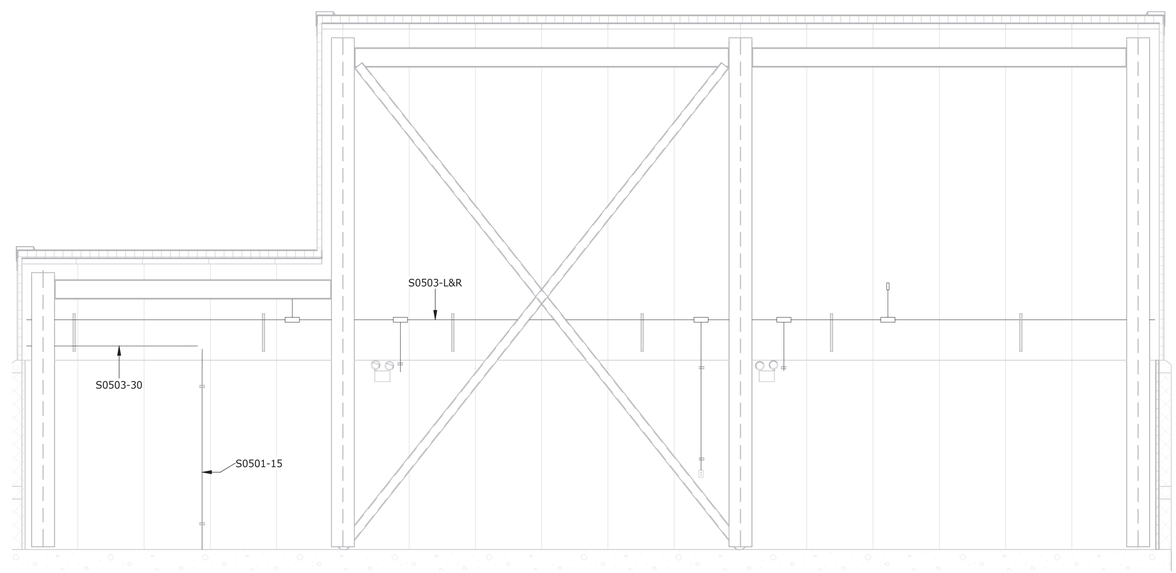

3 60553 CONDUIT SECTION - AIR CHAMBER ROOM EAST WALL
Scale: 1/4" = 1'-0"

RECLAMATION
Managing Water in the West

ALWAYS THINK **SAFETY**

U.S. DEPARTMENT OF THE INTERIOR
BUREAU OF RECLAMATION
NAVAJO GALLUP WATER SUPPLY PROJECT
NEW MEXICO
SAN JUAN LATERAL
PUMPING PLANT NOS. 4 AND 7

Darryl Liscomb
DESIGNED
Darryl Liscomb
DRAWN
Robert D. Cass
CHECKED
TECH. APPR. Lisa Gentry, P.E.
APPROVED Jay Boggess
Peer Reviewer - Manager, Electrical Design Group

DENVER, CO 2020-01-24

ELECTRICAL INSTALLATION

CONDUIT SECTIONS - PUMP ROOM AND AIR CHAMBER ROOM

1695-D-60557

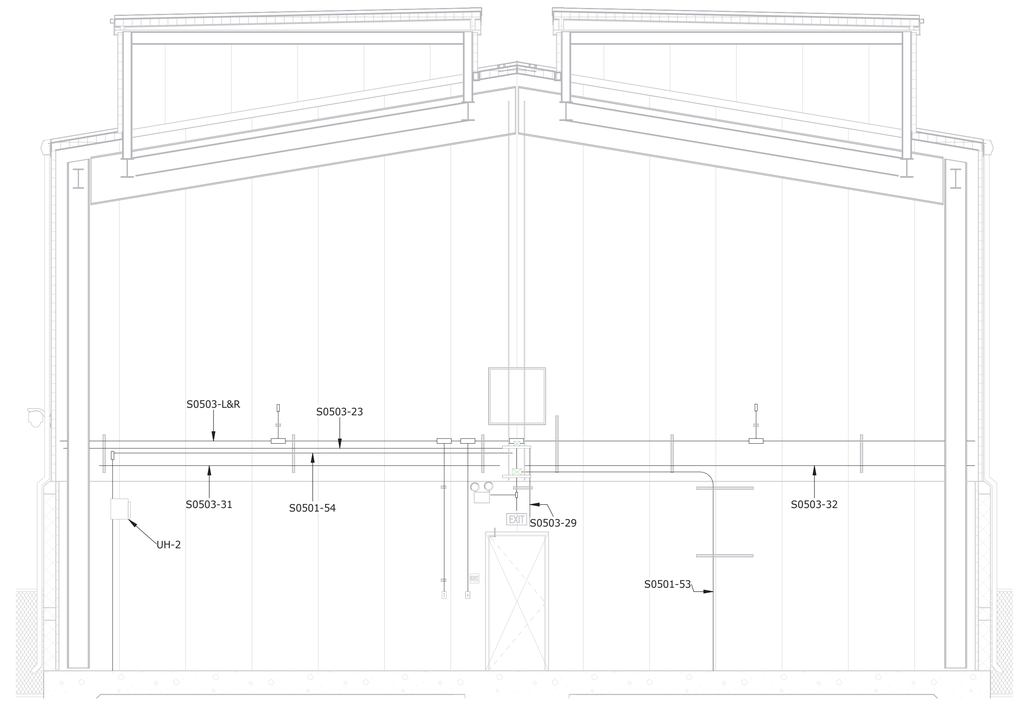

1 60553 CONDUIT SECTION - AIR CHAMBER ROOM SOUTH WALL
Scale: 1/4" = 1'-0"

0 2' 4' 8'

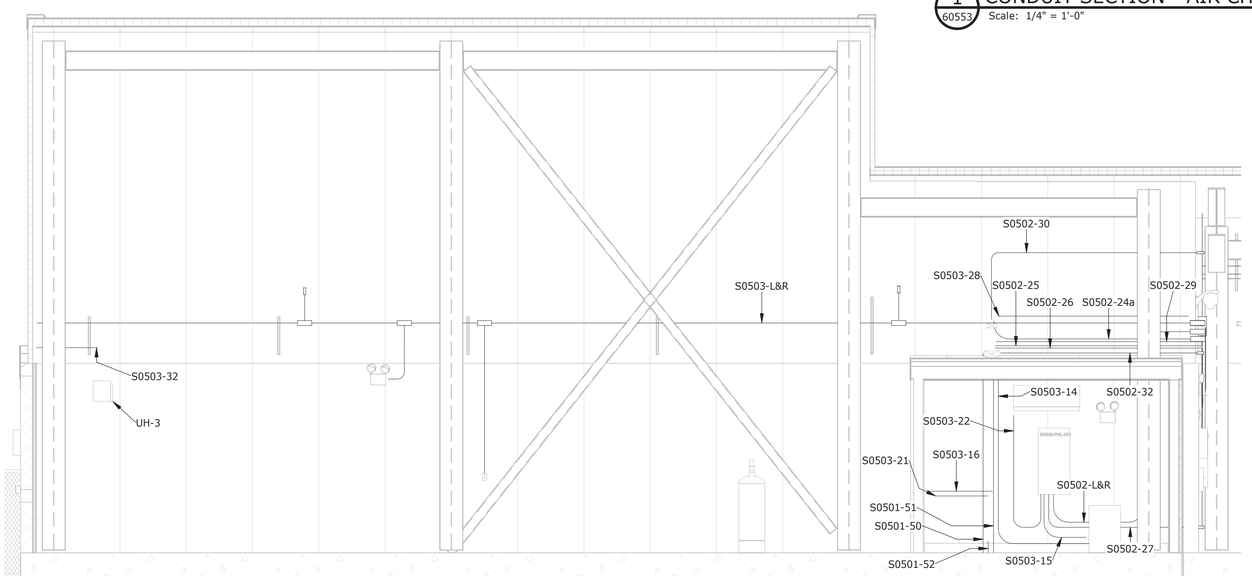

2 60553 CONDUIT SECTION - AIR CHAMBER ROOM WEST WALL
Scale: 1/4" = 1'-0"

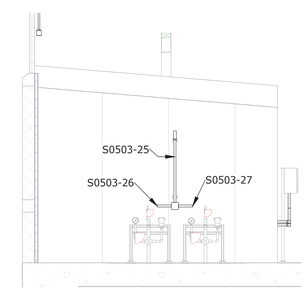

3 60553 CONDUIT SECTION - TANK LEVEL TRANSMITTER
Scale: 1/4" = 1'-0"

RECLAMATION
Managing Water in the West

ALWAYS THINK **SAFETY**

U.S. DEPARTMENT OF THE INTERIOR
BUREAU OF RECLAMATION
NAVAJO GALLUP WATER SUPPLY PROJECT
NEW MEXICO
SAN JUAN LATERAL
PUMPING PLANT NOS. 4 AND 7

Darryl Liscomb
DESIGNED
Darryl Liscomb
DRAWN
Robert D. Cass
CHECKED
TECH. APPR. Lisa Gentry, P.E.
APPROVED Jay Boggess
Peer Reviewer - Manager, Electrical Design Group

DENVER, CO 2020-01-24

ELECTRICAL INSTALLATION

CONDUIT SECTIONS - PUMPING PLANT BUILDING

1695-D-60558

RECLAMATION
Managing Water in the West

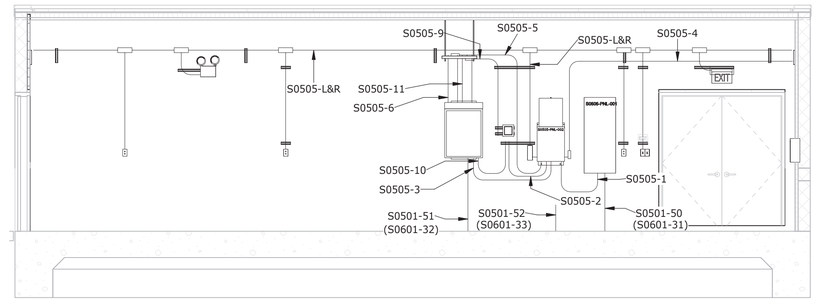

2 CONDUIT ELEVATION - TURNOUT BUILDING EAST
Scale: 1/4" = 1'-0"

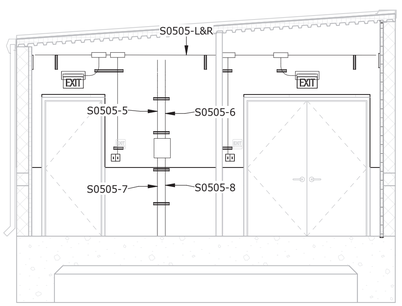

3 CONDUIT ELEVATION - TURNOUT BUILDING NORTH
Scale: 1/4" = 1'-0"

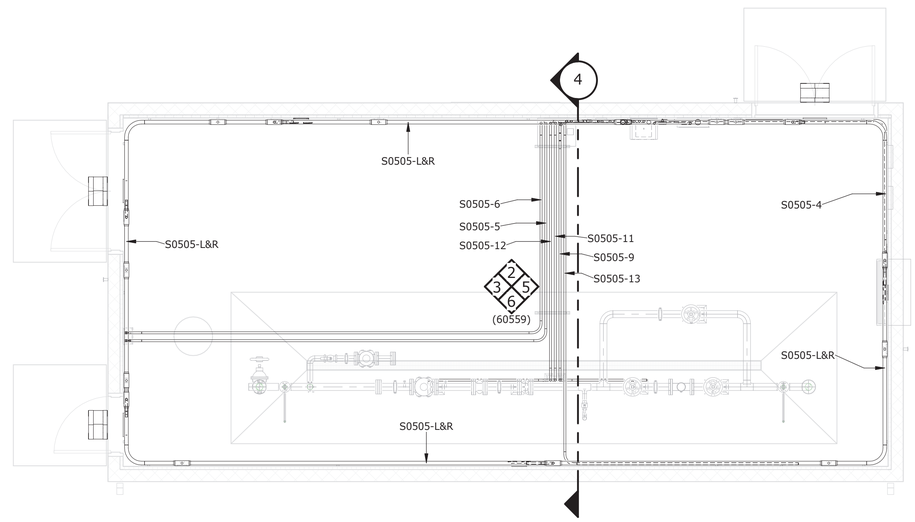

1 60551 PLAN - TURNOUT BUILDING
Scale: 1/4" = 1'-0"

0 2' 4' 8'

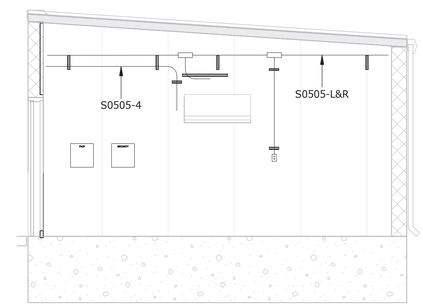

5 CONDUIT ELEVATION - TURNOUT BUILDING SOUTH
Scale: 1/4" = 1'-0"

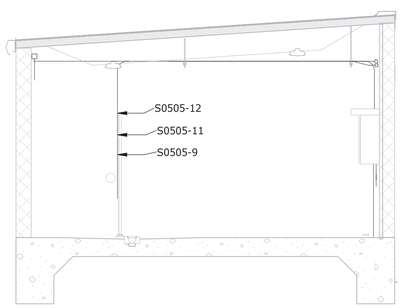

4 CONDUIT SECTION - TURNOUT BUILDING CENTER
Scale: 1/4" = 1'-0"

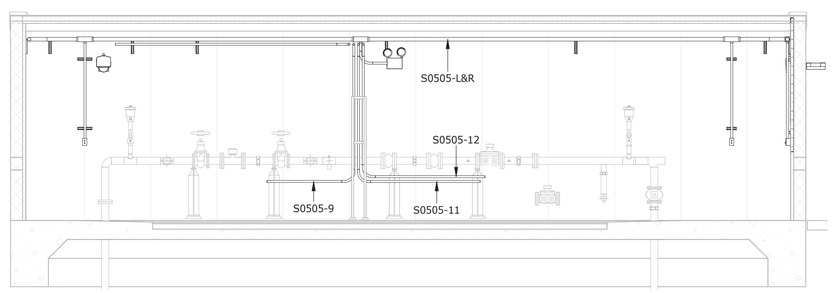

6 CONDUIT ELEVATION - TURNOUT BUILDING WEST
Scale: 1/4" = 1'-0"

7 60551 CONDUIT SECTION
Scale: 3/8" = 1'-0"

0 2' 4' 6'

ALWAYS THINK **SAFETY**

U.S. DEPARTMENT OF THE INTERIOR
BUREAU OF RECLAMATION

NAVAJO GALLUP WATER SUPPLY PROJECT
NEW MEXICO

SAN JUAN LATERAL
PUMPING PLANT NOS. 4 AND 7

Darryl Liscomb
DESIGNED
Darryl Liscomb
DRAWN
Robert D. Cass
CHECKED
TECH. APPR. Lisa Gentry, P.E.
APPROVED Jay Boggess
Peer Reviewer - Manager, Electrical Design Group

DENVER, CO 2020-01-24

ELECTRICAL INSTALLATION

CONDUIT PLAN, SECTIONS, AND ELEVATIONS - TURNOUT BUILDING

1695-D-60559

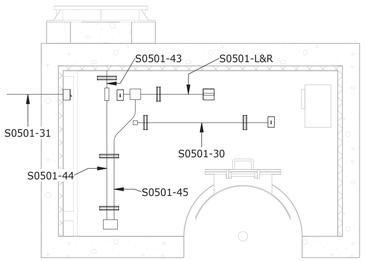

1 60561 CONDUIT ELEVATION - UTILITY VAULT NORTH
Scale: 3/8" = 1'-0"

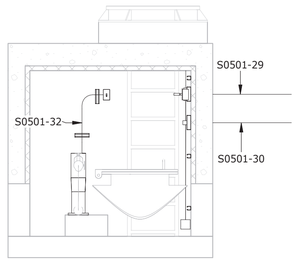

2 60561 CONDUIT ELEVATION - UTILITY VAULT WEST
Scale: 3/8" = 1'-0"

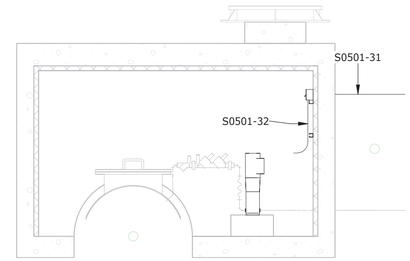

3 60561 CONDUIT ELEVATION - UTILITY VAULT SOUTH
Scale: 3/8" = 1'-0"

4 60551 CONDUIT SECTION - NORTH GATE
Scale: 3/16" = 1'-0"

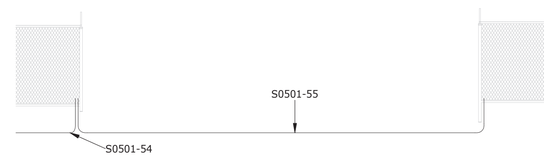

5 60551 CONDUIT SECTION - SOUTH GATE
Scale: 3/16" = 1'-0"

6 60551 PLAN - CATHODIC PROTECTION RECTIFIER CABINET
Scale: 3/8" = 1'-0"

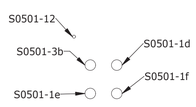

7 60551 CONDUIT SECTION
Scale: 3/8" = 1'-0"

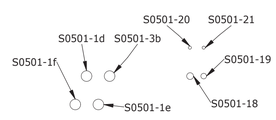

8 60551 CONDUIT SECTION
Scale: 3/8" = 1'-0"

RECLAMATION
Managing Water in the West

ALWAYS THINK **SAFETY**

U.S. DEPARTMENT OF THE INTERIOR
BUREAU OF RECLAMATION
NAVAJO GALLUP WATER SUPPLY PROJECT
NEW MEXICO
SAN JUAN LATERAL
PUMPING PLANT NOS. 4 AND 7

Darryl Liscomb
DESIGNED
Darryl Liscomb
DRAWN
Robert D. Cass
CHECKED
TECH. APPR. Lisa Gentry, P.E.
APPROVED Jay Boggess
Peer Reviewer - Manager, Electrical Design Group

DENVER, CO 2020-01-24

ELECTRICAL INSTALLATION

CONDUIT SECTIONS AND ELEVATIONS - PUMPING PLANT NO. 4 SITE

1695-D-60560

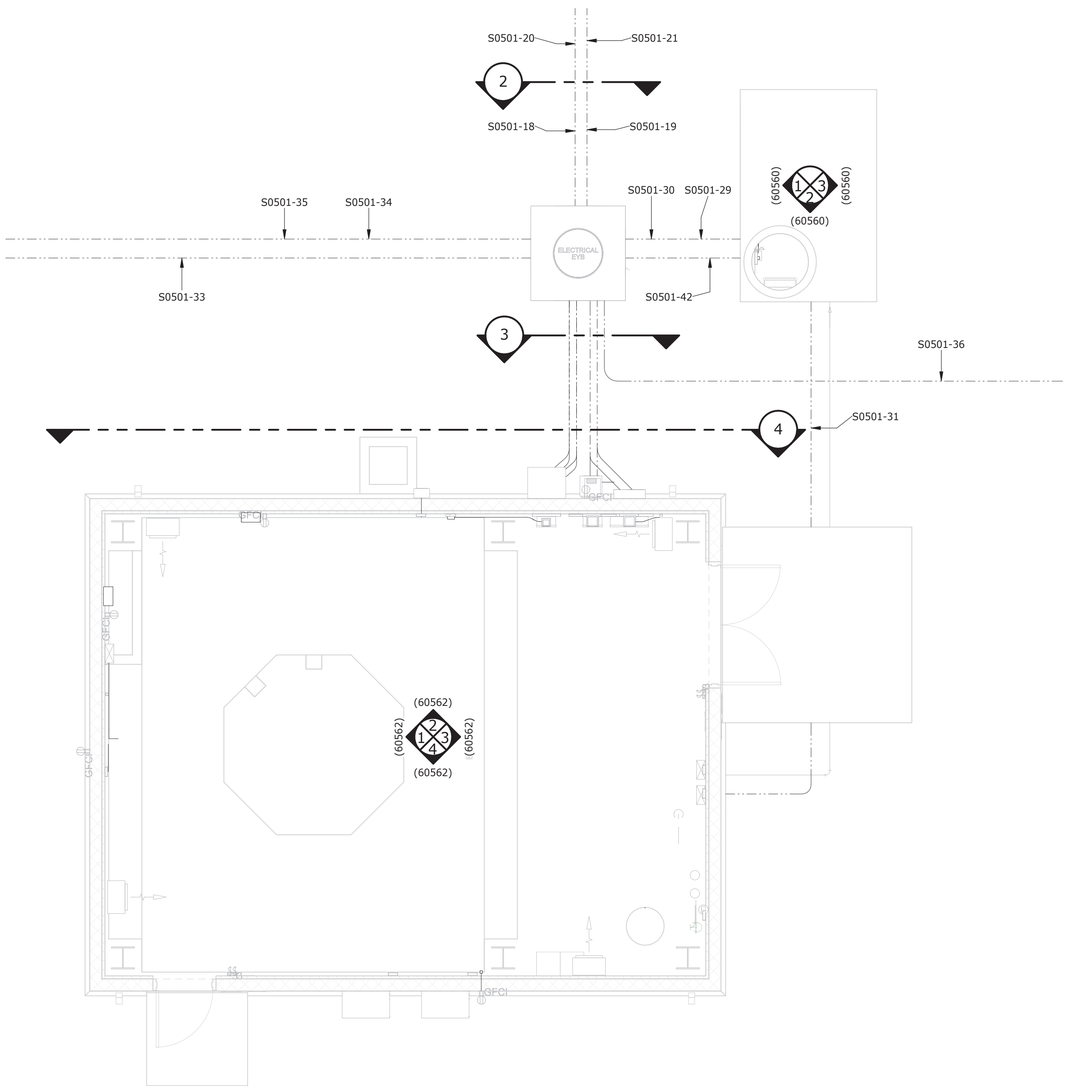

1 CONDUIT PLAN - CHEMICAL BUILDING AND UTILITY VAULT
60551
Scale: 1/4" = 1'-0"

0 2' 4' 8'

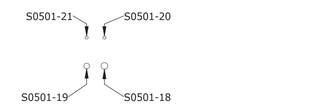

2 CONDUIT SECTION
Scale: 3/8" = 1'-0"

0 2' 4' 6'

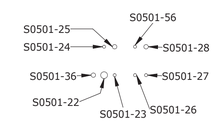

3 CONDUIT SECTION
Scale: 3/8" = 1'-0"

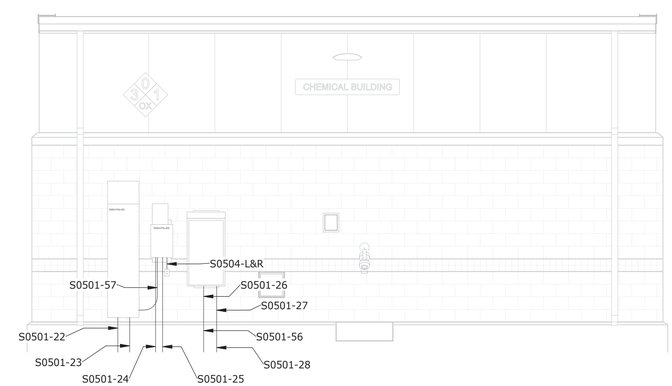

4 CONDUIT SECTION - CHEMICAL BUILDING EXTERIOR EAST
Scale: 1/4" = 1'-0"

RECLAMATION
Managing Water in the West

ALWAYS THINK **SAFETY**

U.S. DEPARTMENT OF THE INTERIOR
BUREAU OF RECLAMATION
NAVAJO GALLUP WATER SUPPLY PROJECT
NEW MEXICO
SAN JUAN LATERAL
PUMPING PLANT NOS. 4 AND 7

Darryl Liscomb
DESIGNED
Darryl Liscomb
DRAWN
Robert D. Cass
CHECKED
TECH. APPR. Lisa Gentry, P.E.
APPROVED Jay Boggess
Peer Reviewer - Manager, Electrical Design Group

DENVER, CO 2020-01-24

ELECTRICAL INSTALLATION

CONDUIT PLAN AND SECTION - PUMPING PLANT NO. 4 CHEMICAL BUILDING

1695-D-60561

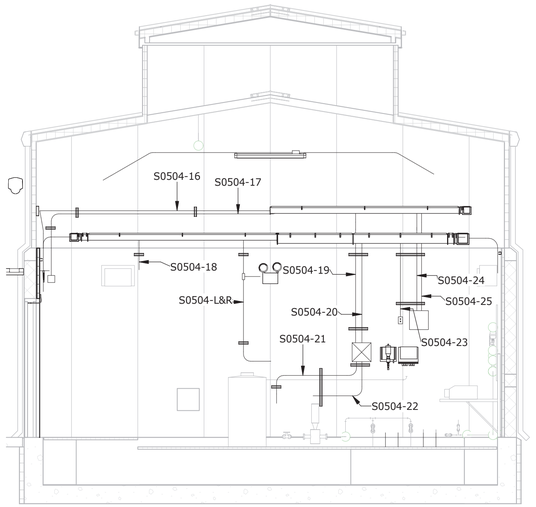

1 60561 CONDUIT ELEVATION - CHEMICAL BUILDING NORTH
Scale: 1/4" = 1'-0"
0 2' 4' 8'

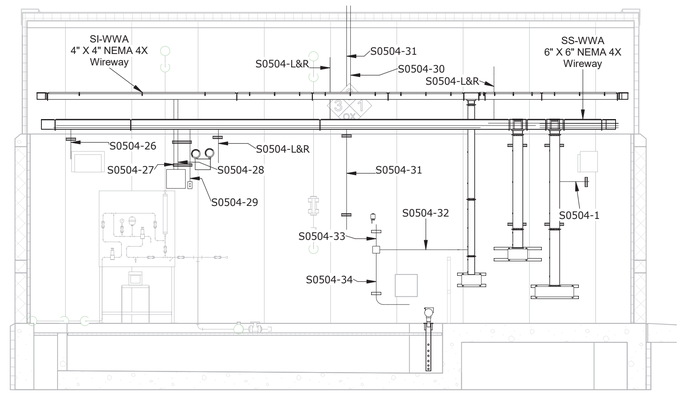

2 60561 CONDUIT ELEVATION - CHEMICAL BUILDING EAST
Scale: 1/4" = 1'-0"

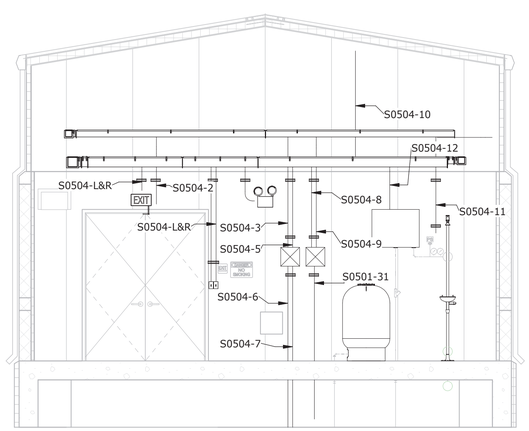

3 60561 CONDUIT ELEVATION - CHEMICAL BUILDING SOUTH
Scale: 1/4" = 1'-0"

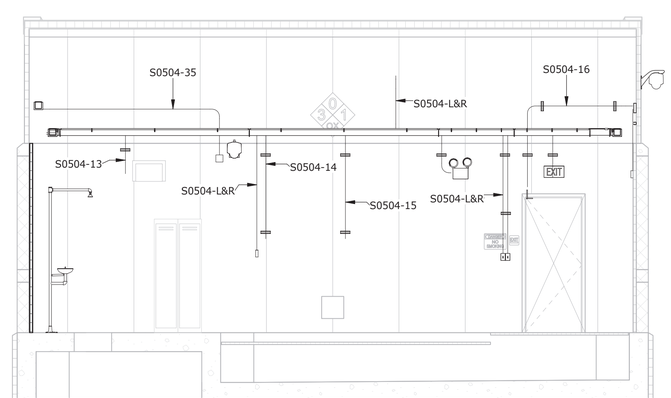

4 60561 CONDUIT ELEVATION - CHEMICAL BUILDING WEST
Scale: 1/4" = 1'-0"

RECLAMATION
Managing Water in the West

ALWAYS THINK **SAFETY**

U.S. DEPARTMENT OF THE INTERIOR
BUREAU OF RECLAMATION
NAVAJO GALLUP WATER SUPPLY PROJECT
NEW MEXICO
SAN JUAN LATERAL
PUMPING PLANT NOS. 4 AND 7

Darryl Liscomb
DESIGNED
Darryl Liscomb
DRAWN
Robert D. Cass
CHECKED
TECH. APPR. Lisa Gentry, P.E.
APPROVED Jay Boggess
Peer Reviewer - Manager, Electrical Design Group

DENVER, CO 2020-01-24

ELECTRICAL INSTALLATION

CONDUIT ELEVATIONS - PUMPING PLANT NO. 4 CHEMICAL BUILDING

1695-D-60562

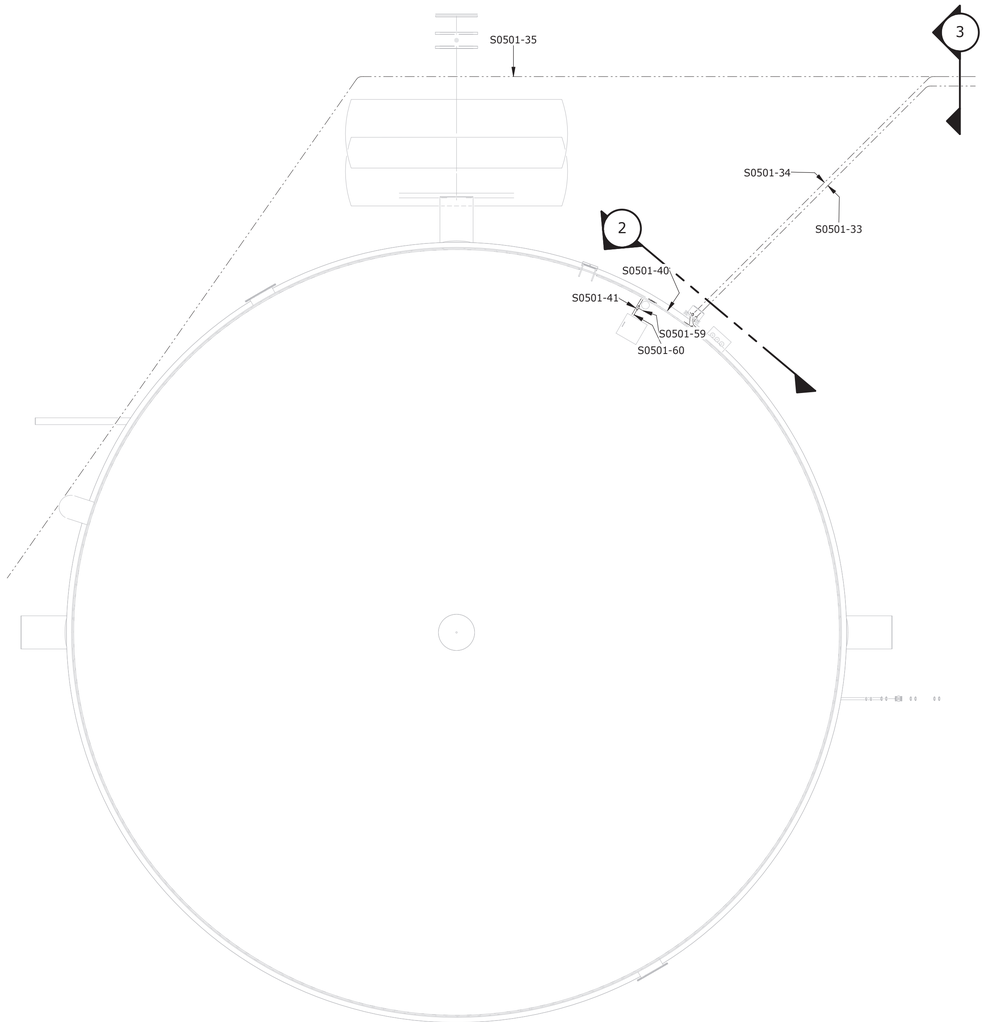

1 60551 CONDUIT PLAN - S0501-TK-001
Scale: 1/8" = 1'-0"
0 4' 8' 16'

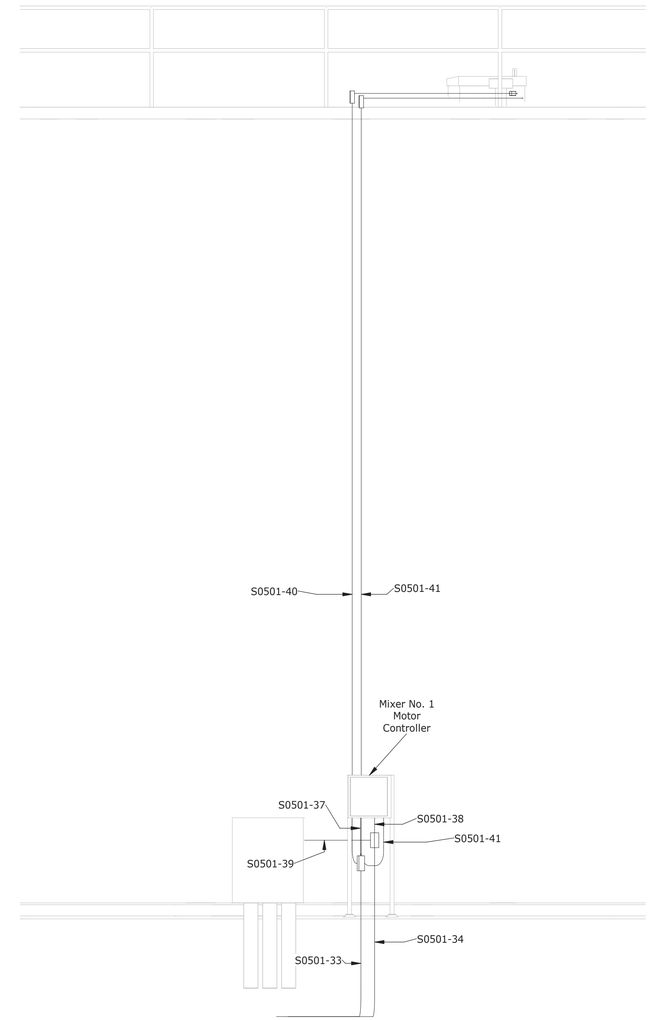

2 CONDUIT SECTION - S0501-TK-001
Scale: 3/8" = 1'-0"
0 2' 4' 6'

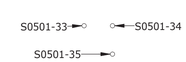

3 CONDUIT SECTION
Scale: 3/8" = 1'-0"

RECLAMATION
Managing Water in the West

ALWAYS THINK **SAFETY**

U.S. DEPARTMENT OF THE INTERIOR
BUREAU OF RECLAMATION
NAVAJO GALLUP WATER SUPPLY PROJECT
NEW MEXICO

SAN JUAN LATERAL
PUMPING PLANT NOS. 4 AND 7

Darryl Liscomb
DESIGNED
Darryl Liscomb
DRAWN
Robert D. Cass
CHECKED
TECH. APPR. Lisa Gentry, P.E.
APPROVED Jay Boggess
Peer Reviewer - Manager, Electrical Design Group

DENVER, CO 2020-01-24

ELECTRICAL INSTALLATION

CONDUIT PLAN AND SECTION - PUMPING PLANT NO. 4 S0501-TK-001

1695-D-60563

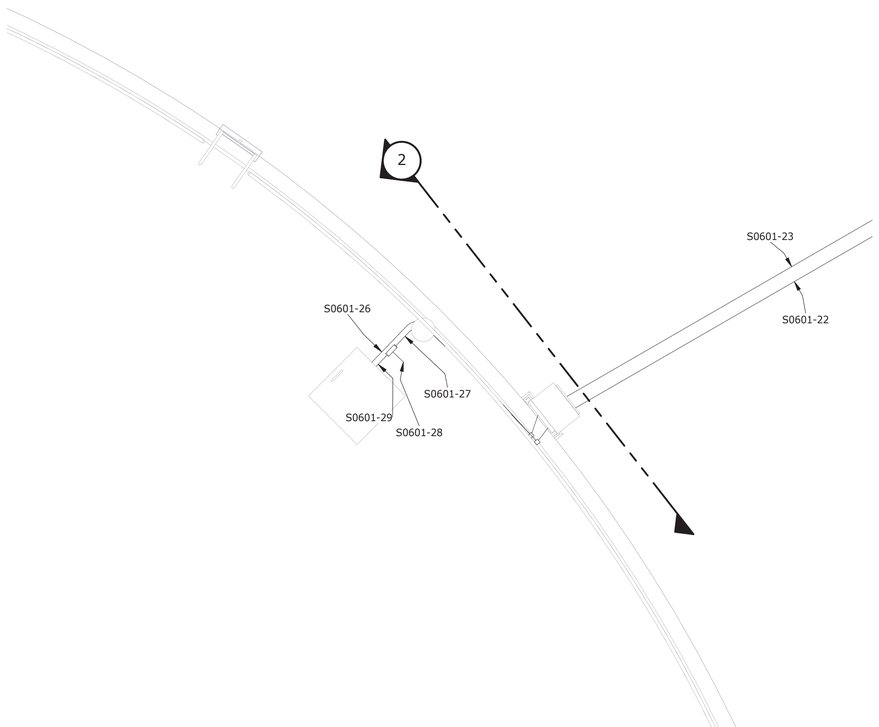

1 60552 CONDUIT PLAN - S0601-TK-001
Scale: 3/8" = 1'-0"

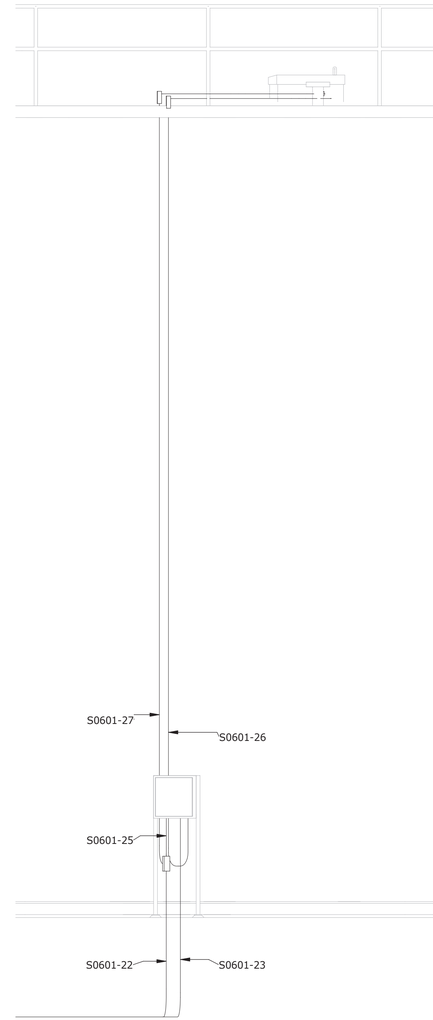

2 CONDUIT SECTION - S0601-TK-001
Scale: 3/8" = 1'-0"

0 2' 4' 6'

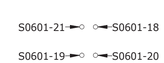

4 60552 CONDUIT SECTION
Scale: 3/8" = 1'-0"

5 60552 CONDUIT SECTION
Scale: 3/8" = 1'-0"

6 60552 CONDUIT SECTION
Scale: 3/8" = 1'-0"

RECLAMATION
Managing Water in the West

ALWAYS THINK **SAFETY**

U.S. DEPARTMENT OF THE INTERIOR
BUREAU OF RECLAMATION
NAVAJO GALLUP WATER SUPPLY PROJECT
NEW MEXICO

SAN JUAN LATERAL
PUMPING PLANT NOS. 4 AND 7

Darryl Liscomb
DESIGNED
Darryl Liscomb
DRAWN
Robert D. Cass
CHECKED
TECH. APPR. Lisa Gentry, P.E.
APPROVED Jay Boogess
Peer Reviewer - Manager, Electrical Design Group

DENVER, CO 2020-01-24

ELECTRICAL INSTALLATION

CONDUIT PLAN AND SECTION - PUMPING PLANT NO. 7 S0601-TK-001

1695-D-60564

RECLAMATION
Managing Water in the West

CONDUIT SCHEDULE - PLANT YARD

CONDUIT NUMBER	DIAMETER (TRADE SIZE)	CONDUIT TYPE	WIRE 1 FUNCTION	CONDUCTOR 1 SIZE	WIRE 2 FUNCTION	CONDUCTOR 2 SIZE	WIRE 3 FUNCTION	CONDUCTOR 3 SIZE	WIRE 4 FUNCTION	CONDUCTOR 4 SIZE	CABLE ORIGINATING POINT	CABLE TERMINATIN POINT
S0501-1a	4"	RNC Schedule80	NTUA Supply to S0501-SWGR-001	3-1/c 4/0 AWG MV-105							NTUA Secondary Cubicle	S0501-SWGR-001
S0501-1b	4"	RNC Schedule80	NTUA Supply to S0501-SWGR-001	3-1/c 4/0 AWG MV-105							NTUA Secondary Cubicle	S0501-SWGR-001
S0501-1c	4"	RNC Schedule80	NTUA Supply to S0501-SWGR-001	3-1/c 4/0 AWG MV-105							NTUA Secondary Cubicle	S0501-SWGR-001
S0501-1d	4"	RNC Schedule80	NTUA Supply to S0501-SWGR-001	3-1/c 4/0 AWG MV-105							NTUA Secondary Cubicle	S0501-SWGR-001
S0501-1e	4"	RNC Schedule80	NTUA Supply to S0501-SWGR-001	3-1/c 4/0 AWG MV-105							NTUA Secondary Cubicle	S0501-SWGR-001
S0501-1f	4"	RNC Schedule80	NTUA Supply to S0501-SWGR-001	3-1/c 4/0 AWG MV-105							NTUA Secondary Cubicle	S0501-SWGR-001
S0501-2a	3"	RNC Schedule80	S0501-SWGR-001 to S0502-MCE-001	3-1/c 3/0 AWG MV-105							S0501-SWGR-001	S0502-S0502-MCE-001
S0501-2b	3"	RNC Schedule80	S0501-SWGR-001 to S0502-MCE-001	3-1/c 3/0 AWG MV-105							S0501-SWGR-001	S0502-S0502-MCE-001
S0501-2c	3"	RNC Schedule80	S0501-SWGR-001 to S0502-MCE-001	3-1/c 3/0 AWG MV-105							S0501-SWGR-001	S0502-S0502-MCE-001
S0501-3a	4"	RNC Schedule80	SPARE	0-								
S0501-3b	4"	RNC Schedule80	SPARE	0-								
S0501-4a	2 1/2"	RNC Schedule80	S0502-SWBD-001 Power	4-1/c 4/0 AWG							S0501-XFMR-T-001	S0502-SWBD-001
S0501-4b	2 1/2"	RNC Schedule80	S0502-SWBD-001 Power	4-1/c 4/0 AWG							S0501-XFMR-T-001	S0502-SWBD-001
S0501-4c	2 1/2"	RNC Schedule80	S0502-SWBD-001 Power	4-1/c 4/0 AWG							S0501-XFMR-T-001	S0502-SWBD-001
S0501-4d	2 1/2"	RNC Schedule80	S0502-SWBD-001 Power	4-1/c 4/0 AWG							S0501-XFMR-T-001	S0502-SWBD-001
S0501-5a	2"	RNC Schedule80	S0502-SWBD-001 Power EG Set	4-1/c 1/0 AWG	EG Set Equipment Ground	1-1/c 2 AWG					Engine Generator	S0502-SWBD-ATS-001
S0501-5b	2"	RNC Schedule80	S0502-SWBD-001 Power EG Set	4-1/c 1/0 AWG	EG Set Equipment Ground	1-1/c 2 AWG					Engine Generator	S0502-SWBD-ATS-001
S0501-6	1"	RNC Schedule80	S0502-SWBD-ATS-001/EG Set Monitoring	2-RS-485							Engine Generator	S0502-SWBD-ATS-001
S0501-7	1"	RNC Schedule80	S0502-SWBD-ATS-001/EG Set Discrete Controls	1-9/c 14 AWG							Engine Generator	S0502-SWBD-ATS-001
S0501-8	1 1/2"	RNC Schedule80	S0501-SWBD-001 Breaker Control Power	3-3/c 12 AWG	S0501-SWGR-001 Cabinet Heaters	1-3/c 10 AWG	S0501-SWGR-001 Lights & Receptacles	1-3/c 12 AWG			S0503-PNL-001	S0501-SWGR-001
S0501-9	1"	RNC Schedule80	S0501-SWBD-001 Bus Protection UPS	1-3/c 12 AWG							S0503-PNL-001	S0501-SWGR-001
S0501-10	1"	RNC Schedule80	S0501-SWBD-001 Communications	2-RS-485							S0503-PNL-001	S0501-SWGR-001
S0501-11	1 1/2"	RNC Schedule80	Engine Generator Auxiliaries	3-3/c 12 AWG							S0503-PNL-001	Engine Generator
S0501-12	1"	RNC Schedule80	North Gate Open Sensor	1-3/c 14 AWG							Security Cabinet	North Gate Open Sensor
S0501-13	1"	RNC Schedule80	North Gate Open Sensor	1-3/c 14 AWG							Security Cabinet	North Gate Open Sensor
S0501-14	1"	RNC Schedule80	North Gate Open Sensor	1-3/c 14 AWG							Security Cabinet	North Gate Open Sensor
S0501-15	2"	RNC Schedule80	Facility Communications	0-							NTUA	Communication Rack
S0501-16	1 1/2"	RNC Schedule80	SPARE	0-								
S0501-18	2 1/2"	RNC Schedule80	S0504-PNL-001 Power	4-1/c 4/0 AWG							S0502-SWBD-301	S0504-PNL-001
S0501-19	2"	RNC Schedule80	SPARE	0-								
S0501-20	1"	RNC Schedule80	Chem Building Communications	1-12 Strand Optical Fiber Cable							Communication Rack	Chemical Building SCADA Cabinet
S0501-21	1"	RNC Schedule80	Chemical Building Fire Detection	2-FPLP TSP 16 AWG							FACP1	Chemical Building SCADA Cabinet
S0501-22	2 1/2"	RNC Schedule80	S0504-PNL-001 Power	4-1/c 4/0 AWG							S0502-SWBD-301	S0504-PNL-001
S0501-23	1"	RNC Schedule80	UH-8 Power	1-4/c 12 AWG							S0504-PNL-001	UH-8
S0501-24	1"	RNC Schedule80	Utility Vault Lighting	3-1/c 12 AWG Premise Wire	Utility Vault Water Leak Detector S0501-LE-001	1-3/c 12 AWG					S0504-PNL-002	Utility Vault
S0501-25	1 1/2"	RNC Schedule80	Mixer No. 1 S0501-M-001	1-3/c 12 AWG	NaClO Cabinet Heater	1-3/c 12 AWG					S0504-PNL-002	Multiple S0501-TK-001
S0501-26	1"	RNC Schedule80	Chemical Building Fire Detection	2-FPLP TSP 16 AWG							FACP1	Chemical Building SCADA Cabinet
S0501-27	1"	RNC Schedule80	Chemical Building Communications	1-12 Strand Optical Fiber Cable							Communication Rack	Chemical Building SCADA Cabinet
S0501-28	1 1/2"	RNC Schedule80	S0501-PIT-101	2-TSP 16 AWG	S0501-ZSC-101 Signal	1-3/c 14 AWG		2-RS-485			Chemical Building SCADA Cabinet	Mixer No. 1 Motor Controller
S0501-29	1"	RNC Schedule80	Utility Vault Lighting	3-1/c 12 AWG Premise Wire	Utility Vault Water Leak Detector S0501-LE-001	1-3/c 12 AWG					S0504-PNL-002	Utility Vault
S0501-30	1"	RNC Schedule80	UH-8 Power	1-4/c 12 AWG							S0504-PNL-001	UH-8
S0501-31	1"	RNC Schedule80	S0501-P-004 Emergency Shower Pump	1-4/c 12 AWG		0-		0-		0-	Emergency Shower Pump Motor Controller	S0501-P-004
S0501-32	3/4"	RMC	S0501-P-004 Emergency Shower Pump	1-4/c 12 AWG							Emergency Shower Pump Motor Controller	S0501-P-004
S0501-33	1 1/2"	RNC Schedule80	S0501-PIT-101 Signal	2-TSP 16 AWG	S0501-ZSC-101 Signal	1-3/c 14 AWG	Mixer No. 1 Motor Controller Communications	2-RS-485			Chemical Building SCADA Cabinet	Mixer No. 1 Motor Controller
S0501-34	1 1/2"	RNC Schedule80	Mixer No. 1 S0501-M-001	1-3/c 12 AWG	NaClO Cabinet Heater	1-3/c 12 AWG					S0504-PNL-002	Mixer No. 1 Motor Controller
S0501-35	1 1/2"	RNC Schedule80	Cathodic Protection Pipeline Bonding Jumper	2-1/c 4 AWG HMWPE							Cathodic Protection Connection North	Cathodic Protection Connection South
S0501-36	1 1/2"	RNC Schedule80	Cathodic Protection Pipeline Bonding Jumper	2-1/c 4 AWG HMWPE							Cathodic Protection Connection North	Cathodic Protection Connection South
S0501-37	1 1/2"	RNC Schedule80	Mixer No.1 Controller Communications	2-RS-485							Chemical Building SCADA Cabinet	Mixer No. 1 Motor Controller
S0501-38	1 1/2"	RNC Schedule80	Mixer No. 1 S0501-M-001	1-3/c 12 AWG		0-					S0504-PNL-002	Mixer No. 1 Motor Controller
S0501-39	1"	RMC	S0501-TK-T1 NaClO Cabinet Heater	1-3/c 12 AWG		0-					S0504-PNL-002	NaClO Cabinet
S0501-40	1"	RMC	S0501-ZSC-101 Signal	1-3/c 14 AWG	S0501-PIT-101 Signal	2-TSP 16 AWG					Chemical Building SCADA Cabinet	S0501-T-001 Hatch
S0501-41	1"	RMC	Mixer No. 1 Motor S0501-M-001	1-4/c 12 AWG							Mixer No. 1 Motor Controller	Mixer No. 1 Junction Box
S0501-42	1"	RNC Schedule80	Utility Vault Hatch Sensors	1-3/c 14 AWG	Utility Vault Water Leak Detector S0501-LE-001	1-3/c 14 AWG					Chemical Building SCADA Cabinet	Utility Vault
S0501-43	3/4"	RMC	Utility Vault Hatch Sensors	1-3/c 14 AWG							Chemical Building SCADA Cabinet	Utility Vault Hatch Sensor
S0501-44	3/4"	RMC	Utility Vault Water Leak Detector S0501-LE-001	1-3/c 14 AWG							Chemical Building SCADA Cabinet	S0501-LE-001
S0501-45	3/4"	RMC	Utility Vault Water Leak Detector S0501-LE-001	1-3/c 12 AWG							S0504-PNL-002	Utility Vault Water Leak Detector S0501-LE-001
S0501-50	3"	RNC Schedule80	S0505-PNL-001 Power	4-1/c 4/0 AWG							S0502-SWBD-301	S0505-PNL-001
S0501-51	2"	RNC Schedule80	Turnout Building Communications	1-12 Strand Optical Fiber Cable							Communications Rack	Turnout Building SCADA Cabinet
S0501-52	2"	RNC Schedule80	SPARE									
S0501-53	1 1/2"	RNC Schedule80	Impressed Current Cathodic Protection	1-3/c 12 AWG							S0503-PNL-001	Cathodic Protection Rectifier Cabinet
S0501-54	1"	RNC Schedule80	South Gate Open Sensor	1-3/c 14 AWG							Security Cabinet	South Gate Open Sensor
S0501-55	1"	RNC Schedule80	South Gate Open Sensor	1-3/c 14 AWG							Security Cabinet	South Gate Open Sensor
S0501-56	1"	RNC Schedule80	Utility Vault Hatch Sensors	1-3/c 14 AWG	Utility Vault Water Leak Detector S0501-LE-001	1-3/c 14 AWG					Chemical Building SCADA Cabinet	Utility Vault
S0501-57	1 1/2"	RMC	S0504-PNL-002 Power	3-1/c 8 AWG							S0504-PNL-001	S0504-PNL-002
S0501-58	1 1/2"	RNC Schedule80	Diesel Fuel Oil Tank Level Signal	2-TSP 16 AWG							SCADA Cabinet	Engine Generator
S0501-59	1"	RMC	S0501-PIT-101 Signal	2-TSP 16 AWG							Chemical Building SCADA Cabinet	S0501-PIT-101
S0501-60	1"	RMC	S0501-ZSC-101 Signal	1-3/c 14 AWG		0-					Chemical Building SCADA Cabinet	S0501-T-001 Hatch
S0501-61	2 1/2"	RNC Schedule80	S0501-XFMR-T-001 Power	3-1/c 1/0 AWG MV-105							S0501-SWGR-201	S0501-XFMR-T-001
S0501-62	1"	RNC Schedule80	S0501-XFMR-T-001 Neutral CT	1-5/c 10 AWG							S0501-SWGR-201	S0501-XFMR-T-001
S0501-63	1 1/2"	RNC Schedule80	S0502-SWBD-001 CT Signal	1-5/c 10 AWG							S0501-SWGR-201	S0502-SWBD-001
S0501-L&R	3/4"	RMC	Lighting & Receptacles	3-1/c 12 AWG Premise Wire							S0504-PNL-002	Utility Vault
S0501-NTUA1	6"	RNC Schedule80	NTUA Power	3-1/c 2 AWG XLPE							NTUA Tap Structure	NTUA Metering Cabinet
S0501-NTUA2	6"	RNC Schedule80	NTUA Power	3-1/c 2 AWG XLPE							NTUA Metering Cabinet	NTUA Transformer
S0501-NTUA3a	6"	RNC Schedule80	NTUA Supply to S0501-SWGR-001	3-1/c 4/0 AWG MV-105							NTUA Transformer	NTUA Secondary Cubicle
S0501-NTUA3b	6"	RNC Schedule80	NTUA Supply to S0501-SWGR-001	3-1/c 4/0 AWG MV-105							NTUA Transformer	NTUA Secondary Cubicle
S0501-NTUA3c	6"	RNC Schedule80	NTUA Supply to S0501-SWGR-001	3-1/c 4/0 AWG MV-105							NTUA Transformer	NTUA Secondary Cubicle
S0501-NTUA4	2"	RNC Schedule80	Facility Communications	1-12 Strand Optical Fiber Cable							NTUA Power Pole	Pull Box EYC

GENERAL NOTES

1. All work to be in accordance with the latest version of NFPA 70, National Electric Code.
2. Conduits S0501-NTUA1-4 listed for example only. Conduit and Cable to be provided by NTUA.

ALWAYS THINK **SAFETY**

U.S. DEPARTMENT OF THE INTERIOR
BUREAU OF RECLAMATION
NAVAJO GALLUP WATER SUPPLY PROJECT
NEW MEXICO

SAN JUAN LATERAL
PUMPING PLANT NOS. 4 AND 7

Darryl Liscomb
DESIGNED
Darryl Liscomb
DRAWN
Robert D. Cass
CHECKED
TECH. APPR. Lisa Gentry, P.E.
APPROVED Jay Boggess
Peer Reviewer - Manager, Electrical Design Group

DENVER, CO 2020-01-24

ELECTRICAL INSTALLATION

CABLE & CONDUIT SCHEDULE - PUMPING PLANT NO. 4 PLANT YARD

1695-D-60565

RECLAMATION
Managing Water in the West

CONDUIT SCHEDULE- PLANT YARD

CONDUIT NUMBER	DIAMETER (TRADE SIZE)	CONDUIT TYPE	WIRE 1 FUNCTION	CONDUCTOR 1 SIZE	WIRE 2 FUNCTION	CONDUCTOR 2 SIZE	WIRE 3 FUNCTION	CONDUCTOR 3 SIZE	WIRE 4 FUNCTION	CONDUCTOR 4 SIZE	Cable Originating Point	Cable Terminating Point
S0601-1a	4"	RNC Schedule80	NTUA Supply to S0601-SWGR-001	3-1/c 4/0 AWG MV-105							NTUA Secondary Cubicle	S0601-SWGR-001
S0601-1b	4"	RNC Schedule80	NTUA Supply to S0601-SWGR-001	3-1/c 4/0 AWG MV-105							NTUA Secondary Cubicle	S0601-SWGR-001
S0601-1c	4"	RNC Schedule80	NTUA Supply to S0601-SWGR-001	3-1/c 4/0 AWG MV-105							NTUA Secondary Cubicle	S0601-SWGR-001
S0601-1d	4"	RNC Schedule80	NTUA Supply to S0601-SWGR-001	3-1/c 4/0 AWG MV-105							NTUA Secondary Cubicle	S0601-SWGR-001
S0601-1e	4"	RNC Schedule80	NTUA Supply to S0601-SWGR-001	3-1/c 4/0 AWG MV-105							NTUA Secondary Cubicle	S0601-SWGR-001
S0601-1f	4"	RNC Schedule80	NTUA Supply to S0601-SWGR-001	3-1/c 4/0 AWG MV-105							NTUA Secondary Cubicle	S0601-SWGR-001
S0601-2a	3"	RNC Schedule80	S0601-SWGR-001 to S0602-MCE-001	3-1/c 3/0 AWG MV-105							S0601-SWGR-001	S0602-MCE-001
S0601-2b	3"	RNC Schedule80	S0601-SWGR-001 to S0602-MCE-001	3-1/c 3/0 AWG MV-105							S0601-SWGR-001	S0602-MCE-001
S0601-2c	3"	RNC Schedule80	S0601-SWGR-001 to S0602-MCE-001	3-1/c 3/0 AWG MV-105							S0601-SWGR-001	S0602-MCE-001
S0601-3a	4"	RNC Schedule80	SPARE	0-								
S0601-3b	4"	RNC Schedule80	SPARE	0-								
S0601-4a	2 1/2"	RNC Schedule80	S0602-SWBD-001 Power	4-1/c 4/0 AWG							S0601-XFMR-T-001	S0602-SWBD-001
S0601-4b	2 1/2"	RNC Schedule80	S0602-SWBD-001 Power	4-1/c 4/0 AWG							S0601-XFMR-T-001	S0602-SWBD-001
S0601-4c	2 1/2"	RNC Schedule80	S0602-SWBD-001 Power	4-1/c 4/0 AWG							S0601-XFMR-T-001	S0602-SWBD-001
S0601-4d	2 1/2"	RNC Schedule80	S0602-SWBD-001 Power	4-1/c 4/0 AWG							S0601-XFMR-T-001	S0602-SWBD-001
S0601-5a	2"	RNC Schedule80	S0602-SWBD-001 Power EG Set	4-1/c 1/0 AWG	EG Set Equipment Ground	1-1/c 2 AWG					Engine Generator	S0602-SWBD-ATS-001
S0601-5b	2"	RNC Schedule80	S0602-SWBD-001 Power EG Set	4-1/c 1/0 AWG	EG Set Equipment Ground	1-1/c 2 AWG					Engine Generator	S0602-SWBD-ATS-001
S0601-6	1"	RNC Schedule80	S0602-SWBD-ATS-001/EG Set Monitoring	2-RS-485							Engine Generator	S0602-SWBD-ATS-001
S0601-7	1"	RNC Schedule80	S0602-SWBD-ATS-001/EG Set Discrete Controls	1-9/c 14 AWG							Engine Generator	S0602-SWBD-ATS-001
S0601-8	1 1/2"	RNC Schedule80	S0601-SWGR-001 Breaker Control Power	3-3/c 12 AWG	S0601-SWGR-001 Cabinet Heaters	1-3/c 10 AWG	S0601-SWGR-001 Lights & Receptacles	1-3/c 12 AWG			S0603-PNL-001	S0601-SWGR-001
S0601-9	1"	RNC Schedule80	S0601-SWGR-001 Bus Protection UPS	1-3/c 12 AWG							S0603-PNL-001	S0601-SWGR-001
S0601-10	1"	RNC Schedule80	S0601-SWGR-001 Modbus	2-RS-485							S0603-PNL-001	S0601-SWGR-001
S0601-11	1 1/2"	RNC Schedule80	Engine Generator Auxiliaries	3-3/c 12 AWG							S0603-PNL-001	Engine Generator
S0601-12	1"	RNC Schedule80	North Gate Open Sensor	1-3/c 14 AWG							Security Cabinet	North Gate Open Sensor
S0601-13	1"	RNC Schedule80	North Gate Open Sensor	1-3/c 14 AWG							Security Cabinet	North Gate Open Sensor
S0601-14	1"	RNC Schedule80	North Gate Open Sensor	1-3/c 14 AWG							Security Cabinet	North Gate Open Sensor
S0601-15	2"	RNC Schedule80	Facility Communications	1-By NTUA							NTUA	Communication Rack
S0601-16	1 1/2"	RNC Schedule80	SPARE	0-								
S0601-18	1 1/2"	RNC Schedule80	Mixer No. 1 S0601-M-001	1-3/c 10 AWG							S0603-PNL-001	Mixer No. 1 S0601-M-001 Controller
S0601-19	1 1/2"	RNC Schedule80	SPARE	0-								
S0601-20	1 1/2"	RNC Schedule80	SPARE	0-								
S0601-21	1 1/2"	RNC Schedule80	S0601-PIT-101 Signal	2-TSP 16 AWG	S0601-ZSC-101 Signal	1-3/c 14 AWG	Mixer No. 1 Motor Controller Communications	2-RS-485			SCADA Cabinet	Multiple S0601-TK-001
S0601-22	1 1/2"	RNC Schedule80	S0601-PIT-101 Signal	2-TSP 16 AWG	S0601-ZSC-101 Signal	1-3/c 14 AWG	Mixer No. 1 Motor Controller Communications	2-RS-485			SCADA Cabinet	Multiple S0601-TK-001
S0601-23	1 1/2"	RNC Schedule80	Mixer No. 1 S0601-M-001	1-3/c 10 AWG							S0603-PNL-001	Mixer No. 1 S0601-M-001 Controller
S0601-25	1 1/2"	RNC Schedule80	Mixer No.1 Controller Modbus	2-RS-485							SCADA Cabinet	Mixer No. 1 Motor Controller
S0601-26	1"	RMC	Mixer No. 1 Motor S0601-M-001	4/c 12 AWG							Mixer No. 1 Motor Controller	Mixer No. 1 Junction Box
S0601-27	1"	RMC	S0601-ZSC-101 Signal	1-3/c 14 AWG	S0601-PIT-101 Signal	2-TSP 16 AWG					SCADA Cabinet	S0601-TK-001 Hatch
S0601-28	1"	RMC	S0601-PIT-101 Signal	2-TSP 16 AWG							SCADA Cabinet	S0601-PIT-101
S0601-29	1"	RMC	S0601-ZSC-101 Signal	1-3/c 14 AWG		0-					SCADA Cabinet	S0601-TK-001 Hatch
S0601-30	1 1/2"	RNC Schedule80	Cathodic Protection Pipeline Bonding Jumper	2-1/c 4 AWG HMWPE							Cathodic Protection Connection North	Cathodic Protection Connection South
S0601-31	3"	RNC Schedule80	S0605-PNL-001 Power	4-1/c 4/0 AWG							S0602-SWBD-301	S0605-PNL-001
S0601-32	2"	RNC Schedule80	Turnout Building Communications	1-12 Strand Optical Fiber Cable							Communications Rack	Turnout Building SCADA Cabinet
S0601-33	2"	RNC Schedule80	SPARE									
S0601-34	1 1/2"	RNC Schedule80	Impressed Current Cathodic Protection	1-3/c 12 AWG							S0603-PNL-001	Cathodic Protection Rectifier Cabinet
S0601-35	1"	RNC Schedule80	South Gate Open Sensor	1-3/c 14 AWG							Security Cabinet	South Gate Open Sensor
S0601-36	1"	RNC Schedule80	South Gate Open Sensor	1-3/c 14 AWG							Security Cabinet	South Gate Open Sensor
S0601-37	1 1/2"	RNC Schedule80	Diesel Fuel Oil Tank Level Signal	2-TSP 16 AWG							SCADA Cabinet	Engine Generator
S0601-38	2 1/2"	RNC Schedule80	S0601-XFMR-T-001 Power	3-1/c 1/0 AWG MV-105							S0601-SWGR-201	S0601-XFMR-T-001
S0601-39	1"	RNC Schedule80	S0601-XFMR-T-001 Neutral CT	1-5/c 10 AWG							S0601-SWGR-201	S0601-XFMR-T-001
S0601-40	1 1/2"	RNC Schedule80	S0602-SWBD-001 CT Signal	1-5/c 10 AWG							S0601-SWGR-201	S0602-SWBD-001
S0601-NTUA1	6"	RNC Schedule80	NTUA Power	3-1/c 2 AWG XLPE							NTUA Tap Structure	NTUA Metering Cabinet
S0601-NTUA2	6"	RNC Schedule80	NTUA Power	3-1/c 2 AWG XLPE							NTUA Metering Cabinet	NTUA Transformer
S0601-NTUA3a	6"	RNC Schedule80	NTUA Supply to S0601-SWGR-001	3-1/c 4/0 AWG MV-105							NTUA Transformer	NTUA Secondary Cubicle
S0601-NTUA3b	6"	RNC Schedule80	NTUA Supply to S0601-SWGR-001	3-1/c 4/0 AWG MV-105							NTUA Transformer	NTUA Secondary Cubicle
S0601-NTUA3c	6"	RNC Schedule80	NTUA Supply to S0601-SWGR-001	3-1/c 4/0 AWG MV-105							NTUA Transformer	NTUA Secondary Cubicle
S0601-NTUA4	2"	RNC Schedule80	Facility Communications	1-By NTUA							NTUA Power Pole	Pull Box EYC

GENERAL NOTES

1. All work to be in accordance with the latest version of NFPA 70, National Electric Code.
2. Conduits S0501-NTUA1-4 listed for example only. Conduit and Cable to be provided by NTUA.

ALWAYS THINK **SAFETY**

U.S. DEPARTMENT OF THE INTERIOR
BUREAU OF RECLAMATION
NAVAJO GALLUP WATER SUPPLY PROJECT
NEW MEXICO

SAN JUAN LATERAL
PUMPING PLANT NOS. 4 AND 7

Darryl Liscomb
DESIGNED
Darryl Liscomb
DRAWN
Robert D. Cass
CHECKED
TECH. APPR. Lisa Gentry, P.E.
APPROVED Jay Boggess
Peer Reviewer - Manager, Electrical Design Group

DENVER, CO 2020-01-24

ELECTRICAL INSTALLATION

CABLE & CONDUIT SCHEDULE - PUMPING PLANT NO. 7 PLANT YARD

1695-D-60566

CONDUIT SCHEDULE - PUMP ROOM

CONDUIT NUMBER	DIAMETER (TRADE SIZE)	CONDUIT TYPE	WIRE 1 FUNCTION	CONDUCTOR 1 SIZE	WIRE 2 FUNCTION	CONDUCTOR 2 SIZE	WIRE 3 FUNCTION	CONDUCTOR 3 SIZE	WIRE 4 FUNCTION	CONDUCTOR 4 SIZE	CABLE ORIGINATING POINT	CABLE TERMINATIN POINT
S0502-1a	2 1/2"	RMC	Unit 1 Power	3-1/c 1/0 AWG MV-105							S0502-MCE-101	S0502-P-U1 Motor
S0502-1b	1 1/2"	RMC	Unit 1 RTDs Signal	8-TRIAD 16 AWG							S0502-MCE-101	S0502-P-U1 Motor
S0502-1c	3/4"	RMC	Unit 1 Heater	1-3/c 12 AWG							S0502-MCE-101	S0502-P-U1 Motor
S0502-2a	2 1/2"	RMC	Unit 2 Power	3-1/c 1/0 AWG MV-105							S0502-MCE-201	S0502-P-U2 Motor
S0502-2b	1 1/2"	RMC	Unit 2 RTDs Signal	8-TRIAD 16 AWG							S0502-MCE-201	S0502-P-U2 Motor
S0502-2c	3/4"	RMC	Unit 2 Heater	1-3/c 12 AWG							S0502-MCE-201	S0502-P-U2 Motor
S0502-3a	2 1/2"	RMC	Unit 3 Power	3-1/c 1/0 AWG MV-105							S0502-MCE-301	S0502-P-U3 Motor
S0502-3b	1 1/2"	RMC	Unit 3 RTDs Signal	8-TRIAD 16 AWG							S0502-MCE-301	S0502-P-U3 Motor
S0502-3c	3/4"	RMC	Unit 3 Heater	1-3/c 12 AWG							S0502-MCE-301	S0502-P-U3 Motor
S0502-4a	2 1/2"	RMC	Unit 4 Power	3-1/c 1/0 AWG MV-105							S0502-MCE-401	S0502-P-U4 Motor
S0502-4b	1 1/2"	RMC	Unit 4 RTDs Signal	8-TRIAD 16 AWG							S0502-MCE-401	S0502-P-U4 Motor
S0502-4c	3/4"	RMC	Unit 4 Heater	1-3/c 12 AWG							S0502-MCE-401	S0502-P-U4 Motor
S0502-5	2"	RMC	S0502-MBV-U1-2 Power	1-4/c 12 AWG	S0502-MBV-U2-2 Power	1-4/c 12 AWG	S0502-FIT-101 Power	1-3/c 12 AWG	S0502-FIT-101 Power	1-3/c 12 AWG	Various	Various
S0502-6	2"	RMC	U1 & U2 Manifold Modbus	2-RS-485	S0502-PS-102 Signal	1-3/c 14 AWG	S0502-PS-202 Signal	1-3/c 14 AWG			SCADA Cabinet	Various
S0502-7	1"	RMC	S0502-MBV-U1-2 Power	1-4/c 12 AWG							S0502-SWBD-101	S0502-MBV-U1-2
S0502-8	1"	RMC	S0502-MBV-U2-2 Power	1-4/c 12 AWG							S0502-SWBD-101	S0502-MBV-U2-2
S0502-9a	1"	RMC	U1 & U2 Manifold Modbus	2-RS-485	S0502-PS-102 Signal	1-3/c 14 AWG	S0502-FE-101 Signal	1-TSP 16 AWG			Various	Various
S0502-9b	1"	RMC	U1 & U2 Manifold Modbus	2-RS-485	S0502-PS-102 Signal	1-3/c 14 AWG					SCADA Cabinet	S0502-MBV-U1-2
S0502-9c	1"	RMC	S0502-FE-101 Signal	1-TSP 16 AWG							U1 & U2 Flow Meter Panel	S0502-FE-101
S0502-10a	1"	RMC	U1 & U2 Manifold Modbus	2-RS-485	S0502-PS-202 Signal	1-3/c 14 AWG	S0502-FE-201 Signal	1-TSP 16 AWG			Various	Various
S0502-10b	1"	RMC	U1 & U2 Manifold Modbus	2-RS-485	S0502-PS-202 Signal	1-3/c 14 AWG					Various	Various
S0502-10c	1"	RMC	S0502-FE-201 Signal	1-TSP 16 AWG							U1 & U2 Flow Meter Panel	S0502-FE-201
S0502-11a	2"	RMC	S0502-MBV-U3-2 Power	1-4/c 12 AWG	S0502-MBV-U4-2 Power	1-4/c 12 AWG	S0502-MBV-U4-4 Power	1-4/c 12 AWG	S0502-MBV-U4-5 Power	1-4/c 12 AWG	S0502-SWBD-101	Various
S0502-11b	2"	RMC	S0502-MBV-U4-7 Power	1-4/c 12 AWG	S0502-FIT-301 Power	1-3/c 12 AWG	S0502-FIT-401 Power	1-3/c 12 AWG		0-	Various	Various
S0502-12	2"	RMC	U3 & U4 Manifold Modbus	2-RS-485	S0502-PS-302 Signal	1-3/c 14 AWG	S0502-PS-302 Signal	1-3/c 14 AWG			SCADA Cabinet	S0502-MBV-U1-2
S0502-13	1"	RMC	S0502-MBV-U3-2 Power	1-4/c 12 AWG							S0502-SWBD-101	S0502-MBV-U3-2
S0502-14a	2"	RMC	S0502-MBV-U4-2 Power	1-4/c 12 AWG	S0502-MBV-U4-4 Power	1-4/c 12 AWG	S0502-MBV-U4-5 Power	1-4/c 12 AWG			S0502-SWBD-101	Various
S0502-14b	2"	RMC	S0502-MBV-U4-2 Power	1-4/c 12 AWG	S0502-MBV-U4-5 Power	1-4/c 12 AWG					S0502-SWBD-101	Various
S0502-14c	1"	RMC	S0502-MBV-U4-2 Power	1-4/c 12 AWG							S0502-SWBD-101	S0502-MBV-U4-2
S0502-14d	1"	RMC	S0502-MBFV-U4-4 Power	1-4/c 12 AWG							S0502-SWBD-101	S0502-MBFV-U4-4
S0502-14e	1"	RMC	S0502-MBFV-U4-5 Power	1-4/c 12 AWG							S0502-SWBD-101	S0502-MBFV-U4-5
S0502-15a	1"	RMC	U3 & U4 Manifold Modbus	2-RS-485	S0502-PS-302 Signal	1-3/c 14 AWG	S0502-FE-301 Signal	1-TSP 16 AWG			Various	Various
S0502-15b	1"	RMC	U3 & U4 Manifold Modbus	2-RS-485	S0502-PS-302 Signal	1-3/c 14 AWG					Various	Various
S0502-15c	1"	RMC	S0502-FE-301 Signal	1-TSP 16 AWG							U3 & U4 Flow Meter Panel	S0502-FE-301
S0502-16	1"	RMC	S0502-MBV-U4-7 Power	1-4/c 12 AWG							S0502-SWBD-101	S0502-MBV-U4-7
S0502-17a	1 1/2"	RMC	U3 & U4 Manifold Modbus	2-RS-485	S0502-PS-402 Signal	1-3/c 14 AWG	S0502-FE-401 Signal	1-TSP 16 AWG			Various	Various
S0502-17b	1 1/2"	RMC	U3 & U4 Manifold Modbus	2-RS-485	S0502-PS-402 Signal	1-3/c 14 AWG	S0502-FE-401 Signal	1-TSP 16 AWG		0-	Various	Various
S0502-17c	1 1/2"	RMC	U3 & U4 Manifold Modbus	2-RS-485	S0502-PIT-402 Signal	1-3/c 14 AWG	S0502-FE-401 Signal	1-TSP 16 AWG			SCADA Cabinet	Various
S0502-17d	1 1/2"	RMC	U3 & U4 Manifold Modbus	2-RS-485	S0502-PS-402 Signal	1-3/c 14 AWG		0-			SCADA Cabinet	Various
S0502-17e	1 1/2"	RMC	U3 & U4 Manifold Modbus	2-RS-485	S0502-PS-402 Signal	1-3/c 14 AWG					SCADA Cabinet	Various
S0502-17f	1"	RMC	U3 & U4 Manifold Modbus	2-RS-485							SCADA Cabinet	Various
S0502-17g	1"	RMC	U3 & U4 Manifold Modbus	2-RS-485		0-					SCADA Cabinet	Various
S0502-17h	1"	RMC	S0502-FE-401 Signal	1-TSP 16 AWG							U3 & U4 Flow Meter Panel	S0502-FE-401
S0502-17j	1"	RMC	U3 & U4 Manifold Modbus	2-RS-485		0-					SCADA Cabinet	Various
S0502-18	3/4"	RMC	S0502-PIT-502 Signal	2-TSP 16 AWG							SCADA Cabinet	S0502-PIT-502
S0502-19	1"	RMC	Roll-up Door 1 Motor Operator	1-4/c 12 AWG							S0502-SWBD-201	Roll-up Door 1
S0502-20	2"	RMC	RTU-1 Power	4-1/c 1/0 AWG							S0502-SWBD-201	RTU-1
S0502-21	2"	RMC	RTU-2 Power	4-1/c 1/0 AWG							S0502-SWBD-301	RTU-2
S0502-22	1 1/4"	RMC	S0502 480 Volt Receptacle Power	1-3/c 4 AWG							S0502-SWBD-201	S0502 480 Volt Receptacle
S0502-23	1"	RMC	S0502-S0502-MCE-001-001 Communications	2-RS-485							SCADA Cabinet	S0502-S0502-MCE-001-001
S0502-24a	2"	RMC	S0502-PS-101 Signal	1-3/c 14 AWG	S0502-PS-201 Signal	1-3/c 14 AWG	S0502-PS-301 Signal	1-3/c 14 AWG	S0502-PS-401 Signal	1-3/c 14 AWG	SCADA Cabinet	Multiple Unit Suction Pressure Switches
S0502-24b	2"	RMC	S0502-PS-101 Signal	1-3/c 14 AWG	S0502-PS-201 Signal	1-3/c 14 AWG	S0502-PS-301 Signal	1-3/c 14 AWG			SCADA Cabinet	Multiple Unit Suction Pressure Switches
S0502-24c	1"	RMC	S0502-PS-401 Signal	1-3/c 14 AWG		0-					SCADA Cabinet	S0502-PS-401
S0502-24d	2"	RMC	S0502-PS-101 Signal	1-3/c 14 AWG	S0502-PS-201 Signal	1-3/c 14 AWG					SCADA Cabinet	Multiple Unit Suction Pressure Switches
S0502-24e	1"	RMC	S0502-PS-301 Signal	1-3/c 14 AWG		0-					SCADA Cabinet	S0502-PS-301
S0502-24f	1"	RMC	S0502-PS-101 Signal	1-3/c 14 AWG							SCADA Cabinet	S0502-PS-101
S0502-24g	1"	RMC	S0502-PS-201 Signal	1-3/c 14 AWG		0-					SCADA Cabinet	S0502-PS-201
S0502-25	1"	RMC	Roll-up Door 2 Motor Operator	1-4/c 12 AWG							S0502-SWBD-201	Roll-up Door 2
S0502-26	1"	RMC	S0502-LCP-001	1-5/c 10 AWG							S0502-SWBD-301	S0502-LCP-001
S0502-27	1"	RMC	Fire Alarm Control Panel 1	1-3/c 12 AWG							S0503-PNL-001	Fire Alarm Control Panel 1
S0502-28	3/4"	RMC	Security Camera 5 Signal	2-CAT 6							Communications Rack	Security Camera 5
S0502-29	3/4"	RMC	Security Camera 3 Signal	2-CAT 6							Communication Rack	Camera 3
S0502-30	3/4"	RMC	S0502-ZSC-505 Signal	1-3/c 14 AWG							Security Cabinet	Pump Room Door 105 Open Sensor
S0502-31	3/4"	RMC	S0502-ZSC-501 Signal	1-3/c 14 AWG							Security Cabinet	Pump Room Door 101 Open Sensor
S0502-32	3/4"	RMC	S0502-ZSC-503 Signal	1-3/c 14 AWG							Security Cabinet	Pump Room Door 103 Open Sensor
S0502-L&R		RMC	Lighting & Receptacles	1/c 12 AWG Premise Wire							Various	Various

GENERAL NOTES

1. All work to be in accordance with the latest version of NFPA 70, National Electric Code.
2. Pumping Plant No. 7 conduit in the Pump Room, Air Chamber Room, and Turnout Building will be similar to Pumping Plant No. 4. Conduit designators for Pumping Plant No. 7 will use S060#-## instead of S050#-##.

RECLAMATION
Managing Water in the West

ALWAYS THINK **SAFETY**

U.S. DEPARTMENT OF THE INTERIOR
BUREAU OF RECLAMATION
NAVAJO GALLUP WATER SUPPLY PROJECT
NEW MEXICO

SAN JUAN LATERAL
PUMPING PLANT NOS. 4 AND 7

Darryl Liscomb
DESIGNED
Darryl Liscomb
DRAWN
Robert D. Cass
CHECKED
TECH. APPR. Lisa Gentry, P.E.
APPROVED Jay Bloggess
Peer Reviewer - Manager, Electrical Design Group

DENVER, CO 2020-01-24

ELECTRICAL INSTALLATION

CABLE AND CONDUIT SCHEDULE - PUMP ROOM

1695-D-60567

CONDUIT SCHEDULE - AIR CHAMBER ROOM

CONDUIT NUMBER	DIAMETER (TRADE SIZE)	CONDUIT TYPE	WIRE 1 FUNCTION	CONDUCTOR 1 SIZE	WIRE 2 FUNCTION	CONDUCTOR 2 SIZE	WIRE 3 FUNCTION	CONDUCTOR 3 SIZE	WIRE 4 FUNCTION	CONDUCTOR 4 SIZE	CABLE ORIGINATING POINT	CABLE TERMINATIN POINT
S0503-1	1 1/2"	RMC	S0503 480 Volt Receptacle	1-3/c 4 AWG							S0502-SWBD-201	S0503 480 Volt Receptacle
S0503-2	1"	RMC	S0503-C-101 Power	1-4/c 6 AWG	S0503-C-101 Control	1-5/c 12 AWG					Various	S0503-C-101 Motor Controller
S0503-3	1"	RMC	S0503-C-101 Start	1-3/c 12 AWG	S0503-C-101 Running Signal	1-3/c 14 AWG					S0503-CP-001	S0503-C-101 Motor Controller
S0503-4	1"	RMC	S0503-C-201 Power	1-4/c 6 AWG	S0503-C-201 Control	1-5/c 12 AWG					Various	S0503-C-201 Motor Controller
S0503-5	1"	RMC	S0503-C-201 Start	1-3/c 12 AWG	S0503-C-201 Running Signal	1-3/c 14 AWG					S0503-CP-001	S0503-C-201 Motor Controller
S0503-6	1 1/2"	RMC	S0503-LS-101 & S0503-LS-102	1-5/c 14 AWG	S0503-ZSC-101 & S0503-ZSO-101 Signals	1-5/c 14 AWG					SCADA Cabinet	S0503-TK-AC1
S0503-7	1"	RMC	S0503-ZSC-101 & S0503-ZSO-101	1-5/c 14 AWG							SCADA Cabinet	S0503-BFV-AC1-1
S0503-8	1 1/2"	RMC	S0503-LS-301 & S0503-LS-302	1-5/c 14 AWG	S0503-ZSC-301 & S0503-ZSO-301 Signals	1-5/c 14 AWG					SCADA Cabinet	S0503-TK-AC3
S0503-9	1"	RMC	S0503-ZSC-301 & S0503-ZSO-301	1-5/c 14 AWG							SCADA Cabinet	S0503-BFV-AC3-1
S0503-10	1 1/2"	RMC	S0503-LS-201 & S0503-LS-202	1-5/c 14 AWG	S0503-ZSC-201 & S0503-ZSO-201 Signals	1-5/c 14 AWG					SCADA Cabinet	S0503-TK-AC2
S0503-11	1"	RMC	S0503-ZSC-201 &S0503-ZSO-201	1-5/c 14 AWG							SCADA Cabinet	S0503-BFV-AC2-1
S0503-12	1 1/2"	RMC	S0503-LS-401 & S0503-LS-402	1-5/c 14 AWG	S0503-ZSC-401 & S0503-ZSO-401 Signals	1-5/c 14 AWG					SCADA Cabinet	S0503-TK-AC4
S0503-13	1"	RMC	S0503-ZSC-401 & S0503-ZSO-401	1-5/c 14 AWG							SCADA Cabinet	S0503-BFV-AC4-1
S0503-14	2"	RMC	S0503-XFMR-T-001 Power	1-4/c 6 AWG							S0502-SWBD-301	S0503-XFMR-T-001
S0503-15	2"	RMC	S0503-PNL-001	4-1/c 1/0 AWG							S0503-XFMR-T-001	S0503-PNL-001
S0503-16	1"	RMC	SCADA Cabinet Receptacles	6-1/c 12 AWG Premise Wire							S0503-PNL-001	SCADA Cabinet
S0503-17	1"	RMC	Gravity Drainage Sump Pump Power	1-							S0503-PNL-001	Sump Pump Motor Controller
S0503-18	1"	RMC	Gravity Drainage Sump Level Signals	1-5/c 14 AWG							SCADA Cabinet	Gravity Drainage Sump Pump Motor Controller
S0503-19	1"	RNC Schedule80	Gravity Drainage Sump Pump Power	1-4/c 12 AWG							Sump Pump Motor Controller	Sump Pump Motor
S0503-20	1"	RNC Schedule80	S0503-LSO-501 & S0503-LSO-601 Signal	1-5/c Shielded 18 AWG							Sump Pump Motor Controller	S0503-LSO-501 & S0503-LSO-701
S0503-21	1"	RMC	Communication Rack Receptacles	3-1/c 12 AWG Premise Wire							S0503-PNL-001	Communication Rack
S0503-22	1"	RMC	PTAC-1	1-3/c 12 AWG							S0503-PNL-001	PTAC-1
S0503-23	1"	RMC	Security Camera 4 Signal	2-CAT 6							Communication Rack	Security Camera 4
S0503-24	1"	RMC	Security Camera 2 Signal	2-CAT 6							Communication Rack	Security Camera 2
S0503-25	1"	RMC	S0503-PIT-102 Signal	2-TSP 16 AWG	S0503-PIT-202 Signal	2-TSP 16 AWG					SCADA Cabinet	S0503-PIT-102
S0503-26	1"	RMC	S0503-PIT-102 Signal	2-TSP 16 AWG							SCADA Cabinet	S0503-PIT-102
S0503-27	1"	RMC	S0503-PIT-202 Signal	2-TSP 16 AWG							SCADA Cabinet	S0503-PIT-202
S0503-28	3/4"	RMC	Security Camera 1 Signal	2-CAT 6							Communication Rack	Security Camera 1
S0503-29	3/4"	RMC	S0503-ZSC-502 Signal	1-3/c 14 AWG							Security Cabinet	Air Chamber Room Door 102 Open Sensor
S0503-30	1"	RMC	UH-1 Power	1-4/c 12 AWG							S0502-SWBD-201	UH-1
S0503-31	1"	RMC	UH-2 Power	1-4/c 12 AWG		0-					S0502-SWBD-301	UH-2
S0503-32	1"	RMC	UH-3 Power	1-4/c 12 AWG		0-					S0502-SWBD-201	UH-3
S0503-L&R		RMC	Lighting & Receptacles	1/c 12 AWG Premise Wire							Various	Lighting & Receptacles

CONDUIT SCHEDULE - TURNOUT BUILDING

CONDUIT NUMBER	DIAMETER (TRADE SIZE)	CONDUIT TYPE	WIRE 1 FUNCTION	CONDUCTOR 1 SIZE	WIRE 2 FUNCTION	CONDUCTOR 2 SIZE	WIRE 3 FUNCTION	CONDUCTOR 3 SIZE	WIRE 4 FUNCTION	CONDUCTOR 4 SIZE	CABLE ORIGINATING POINT	CABLE TERMINATIN POINT
S0505-1	1"	RMC	S0505-PNL-002 Power	3-1/c 10 AWG							S0505-PNL-001	S0505-PNL-002
S0505-2	1"	RMC	Flow Meter S0505-FIT-001 Power	3-1/c 12 AWG							S0505-PNL-002	S0505-FIT-001
S0505-3	1"	RMC	Turnout Building SCADA Cabinet Power	3-1/c 12 AWG	S0505-FCV-TO-14 Solenoid Power	3-1/c 12 AWG					S0505-PNL-002	Turnout Building SCADA Cabinet
S0505-4	1"	RMC	PTAC-4 Power	3-1/c 10 AWG							S0505-PNL-002	PTAC-4
S0505-5	1"	RMC	Turnout Building Sump Pump Power	1-3/c 12 AWG							S0505-PNL-002	Turnout Building Sump Pump Controller
S0505-6	1"	RMC	Turnout Building Sump Signals	1-3/c 14 AWG							Turnout Building SCADA Cabinet	Turnout Building Sump Pump Controller
S0505-7	1"	RMC	Turnout Building Sump Pump Power	1-3/c 12 AWG							Turnout Building Sump Pump Controller	Turnout Building Sump Pump
S0505-8	1"	RMC	Turnout Building Sump Pump Control	1-Level Switch Cables							Turnout Building Sump Pump Controller	Turnout Building Sump Level Switches
S0505-9	1"	RMC	Flow Meter Signal	1-Flow Meter Signal Cable							Flow Meter Transmitter S0505-FIT-001	Flow Meter S0505-FE-001
S0505-10	1"	RMC	Flow Meter Signal	2-RS0485							Turnout Building SCADA Cabinet	Flow Meter Transmitter S0505-FIT-001
S0505-11	1"	RMC	S0505-FCV-TO-14 Control	1-3/c 12 AWG							Turnout Building SCADA Cabinet	S0505-FCV-TO-14
S0505-12	1"	RMC	S0505-FCV-TO-14 Signal	1-3/c 14 AWG							Turnout Building SCADA Cabinet	S0505-FCV-TO-14
S0505-13	1"	RMC	Security Camera 8 Signal	2-CAT 6							Turnout Building SCADA Cabinet	Security Camera 8
S0505-L&R		RMC	Lighting & Receptacles	18-1/c 12 AWG Premise Wire							S0505-PNL-002	Various

GENERAL NOTES

1. All work to be in accordance with the latest version of NFPA 70, National Electric Code.
2. Pumping Plant No. 7 conduit in the Pump Room, Air Chamber Room, and Turnout Building will be similar to Pumping Plant No. 4. Conduit designators for Pumping Plant No. 7 will use S060#-## instead of S050#-##.

RECLAMATION
Managing Water in the West

ALWAYS THINK **SAFETY**

U.S. DEPARTMENT OF THE INTERIOR
BUREAU OF RECLAMATION
NAVAJO GALLUP WATER SUPPLY PROJECT
NEW MEXICO

SAN JUAN LATERAL
PUMPING PLANT NOS. 4 AND 7

Darryl Liscomb
DESIGNED
Darryl Liscomb
DRAWN
Robert D. Cass
CHECKED
TECH. APPR. Lisa Gentry, P.E.
APPROVED Jay Boggess
Peer Reviewer - Manager, Electrical Design Group

DENVER, CO 2020-01-24

ELECTRICAL INSTALLATION

CABLE & CONDUIT SCHEDULE - AIR CHAMBER ROOM AND TURNOUT BLDG

1695-D-60568

RECLAMATION
Managing Water in the West

CONDUIT SCHEDULE - CHEMICAL BUILDING

CONDUIT NUMBER	DIAMETER (TRADE SIZE)	CONDUIT TYPE	WIRE 1 FUNCTION	CONDUCTOR 1 SIZE	WIRE 2 FUNCTION	CONDUCTOR 2 SIZE	WIRE 3 FUNCTION	CONDUCTOR 3 SIZE	WIRE 4 FUNCTION	CONDUCTOR 4 SIZE	CABLE ORIGINATING POINT	CABLE TERMINATIN POINT
S0504-1	1"	PCRS	UH-7 Power	1-4/c 12 AWG							S0504-PNL-001	UH-7
S0504-2	3/4"	PCRS	S0504-ZSC-001	1-3/c 14 AWG							Chemical Building SCADA Cabinet	Chemical Building South Door
S0504-3	3/4"	PCRS	S0504-LSH-002 Shower Sump High Level Alarm	1-3/c 14 AWG							Chemical Building SCADA Cabinet	Shower Sump Pump Motor Controller
S0504-5	3/4"	PCRS	Shower Sump Pump	1-3/c 12 AWG							S0504-PNL-002	Shower Sump Pump Motor Controller
S0504-6	1"	RNC Schedule80	Shower Sump Level Switches	3-2/c 14 AWG							Shower Sump Pump Motor Controller	Shower Sump Level Switches
S0504-7	1"	RNC Schedule80	Shower Sump Pump	1-3/c 12 AWG							Shower Sump Pump Motor Controller	Shower Sump Pump
S0504-8	3/4"	PCRS	S0501-P-004 Emergency Shower Pump	1-4/c 12 AWG							S0504-PNL-001	Emergency Shower Pump Motor Controller
S0504-9	1"	PCRS	S0504-PS-001 Energency Shower Pressure Switch	1-3/c 14 AWG	S0504-YE-004 Emergency Shower Pump Running	1-3/c 14 AWG					Emergency Shower Pump Motor Controller	S0504-PS-001/SCADA Cabinet
S0504-10	1"	PCRS	VF-1	1-3/c 12 AWG							S0504-PNL-002	VF-1
S0504-11	3/4"	PCRS	S0504-PS-001 Emergency Shower Pressure Switch	1-3/c 14 AWG							Emergency Shower Pump Motor Controller	S0504-PS-001
S0504-12	2"	PCRS	S0504-E-001 Power	3-1/c 2/0 AWG	S0504-E-001 Gnd	1-1/c 6 AWG					S0504-PNL-001	S0504-E-001
S0504-13	1"	PCRS	UH-6	1-4/c 12 AWG							S0504-PNL-001	UH-6
S0504-14	1"	PCRS	PTAC-2	1-3/c 12 AWG							S0504-PNL-002	PTAC-2
S0504-15	1"	PCRS	PTAC-3	1-3/c 12 AWG							S0504-PNL-002	PTAC-3
S0504-16	3/4"	PCRS	S0504-ZSC-002 Signal	1-3/c 14 AWG							Chemical Building SCADA Cabinet	Chemical Building West Door
S0504-17	3/4"	PCRS	Security Camera 6 Signal	2-CAT 6							Chemical Building SCADA Cabinet	Security Camera 6
S0504-18	1"	PCRS	UH-5	1-4/c 12 AWG							S0504-PNL-001	UH-5
S0504-19	1"	PCRS	S0504-YE-003 Signal	1-3/c 14 AWG	S0504-LS-001 & 154-LS-004	1-5/c 14 AWG					Chemical Building SCADA Cabinet	Chlorine Residual Sample Pump Motor Controller
S0504-20	1"	PCRS	Chlorine Residual Sample Return Pump	1-3/c 12 AWG							S0504-PNL-002	Chlorine Residual Sample Pump Motor Controller
S0504-21	3/4"	PCRS	Chlorine Residual Sample Drain Tank Level	1-9/c 14 AWG							Chlorine Residual Sample Pump Motor Controller	Chlorine Residual Sample Drain Tank
S0504-22	3/4"	PCRS	Chlorine Residual Sample Return Pump	1-3/c 12 AWG							Chlorine Residual Sample Pump Motor Controller	Chlorine Residual Sample Return Pump
S0504-23	1"	PCRS	Resudual Analyzer Receptacle	3-1/c 12 AWG Premise Wire		0-					S0504-PNL-002	Resudual Analyzer Receptacle
S0504-24	1 1/2"	PCRS	S0504-AIT-001 A/O Signals	4-TSP 16 AWG	S0504-AIT-002 A/O Signals (Future)	4-TSP 16 AWG					Chemical Building SCADA Cabinet	S0504-AIT-001/S0504-AIT-002
S0504-25	1"	PCRS	S0504-AIT-001 D/O Signal	1-3/c 14 AWG	S0504-AIT-002 D/O Signal (Future)	1-3/c 14 AWG					S0504-AIT-001/S0504-AIT-002	S0504-P-001/S0504-P-002
S0504-26	1"	PCRS	UH-4	1-4/c 12 AWG							S0504-PNL-001	UH-4
S0504-27	1"	PCRS	S0504-AIT-001 D/O Signal	1-3/c 14 AWG	S0504-AIT-002 D/O Signal (Future)	1-3/c 14 AWG					S0504-AIT-001/S0504-AIT-002	S0504-P-001/S0504-P-002
S0504-28	1 1/2"	PCRS	S0504-P-001 Signals	2-RS-485	S0504-P-002 Signals (Future)	2-RS-485					Chemical Building SCADA Cabinet	S0504-P-001/S0504-P-002
S0504-29	3/4"	PCRS	Peristaltic Pump Receptacle	3-1/c 12 AWG Premise Wire							S0504-PNL-002	Peristaltic Pump Receptacle
S0504-30	3/4"	PCRS	S0504-LT-001 Signal	2-TSP 16 AWG							Chemical Building SCADA Cabinet	S0504-LT-001
S0504-31	3/4"	PCRS	S0504-LI-002 Signal	2-TSP 16 AWG (or Manufacturers cable)							S0504-LI-002	Remote Meter Cabinet
S0504-32	1"	PCRS	S0504-TE-002 Signal	2-TRIAD 16 AWG	S0504-LE-003 Signal	1-3/c 14 AWG					Chemical Building SCADA Cabinet	Multiple
S0504-33	3/4"	PCRS	S0504-TE-002 Signal	2-TRIAD 16 AWG							Chemical Building SCADA Cabinet	S0504-TE-002
S0504-34	3/4"	PCRS	S0504-LE-003 Signal	1-3/c 14 AWG							Chemical Building SCADA Cabinet	S0504-LE-003
S0504-35	3/4"	PCRS	Security Camera 7 Signal	2-CAT 6							Chemical Building SCADA Cabinet	Security Camera 7
S0504-L&R		PCRS	Lighting & Receptacles	1/c 12 AWG Premise Wire							S0504-PNL-002	Lighting & Receptacles

ALWAYS THINK **SAFETY**

U.S. DEPARTMENT OF THE INTERIOR
BUREAU OF RECLAMATION
NAVAJO GALLUP WATER SUPPLY PROJECT
NEW MEXICO
SAN JUAN LATERAL
PUMPING PLANT NOS. 4 AND 7

Darryl Liscomb
DESIGNED
Darryl Liscomb
DRAWN
Robert D. Cass
CHECKED
TECH. APPR. Lisa Gentry, P.E.
APPROVED Jay Boggess
Peer Reviewer - Manager, Electrical Design Group

DENVER, CO 2020-01-24

ELECTRICAL INSTALLATION

CABLE & CONDUIT SCHEDULE - CHEMICAL BUILDING

1695-D-60569

GENERAL NOTES

1. All work to be in accordance with the latest version of NFPA 70, National Electric Code.
2. Cable tray routings are typical.
3. Cable and conductors to be routed via conduit from equipment to the cable tray.
4. Cable tray sections MP-x and SS-x to be located approximately 10.5 feet AFF except where installed above the motor control center (S0502-MCE-001) and low voltage switchboard (S0502-SWBD-001).
5. Cable tray sections MI-x and SI-x to be located approximately 18 inches above the respective sections MP-x and SS-x except where installed above the motor control center (S0502-MCE-001) and low voltage switchboard (S0502-SWBD-001).
6. Cable tray sections MP-A, MI-A, SS-A, and SI-A to be spaced evenly between the top of the motor control center (S0502-MCE-001) and low voltage switchboard (S0502-SWBD-001) and the wall mounted ventilation fans. Ensure adequate space is provided for installation and removal of associated conduit, conductors, and cables.
7. Cable tray support trapeze to be suspended from available roof support beams and purlins using the appropriate hardware. Coordinate design and installation with the pre-engineered building manufacturer and cable tray manufacturers installation requirements.

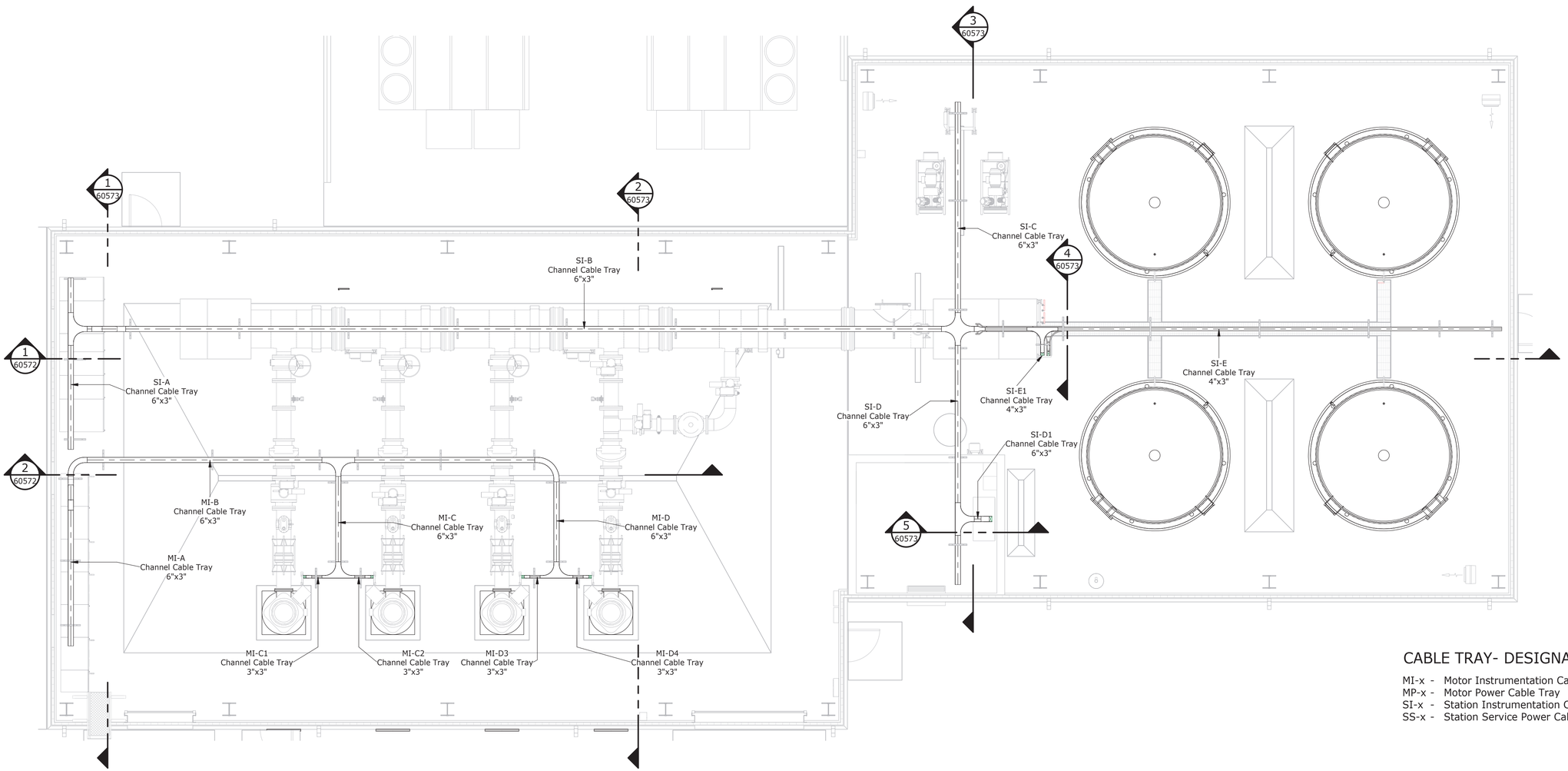

CABLE TRAY- DESIGNATIONS

MI-x - Motor Instrumentation Cable Tray
MP-x - Motor Power Cable Tray
SI-x - Station Instrumentation Cable Tray
SS-x - Station Service Power Cable Tray

CABLE TRAY PLAN - INSTRUMENTATION

Scale: 3/16" = 1'-0"

0 5' 10'

RECLAMATION
Managing Water in the West

ALWAYS THINK **SAFETY**

U.S. DEPARTMENT OF THE INTERIOR
BUREAU OF RECLAMATION
NAVAJO GALLUP WATER SUPPLY PROJECT
NEW MEXICO

SAN JUAN LATERAL
PUMPING PLANT NOS. 4 AND 7

DESIGNED	Darryl Liscomb
DRAWN	Darryl Liscomb
CHECKED	Robert D. Cass
TECH. APPR.	Lisa Gentry, P.E.
APPROVED	Jay Boggess Peer Reviewer - Manager, Electrical Design Group
DENVER, CO	2020-01-24

ELECTRICAL INSTALLATION

CABLE TRAY PLAN - INSTRUMENTATION

1695-D-60570

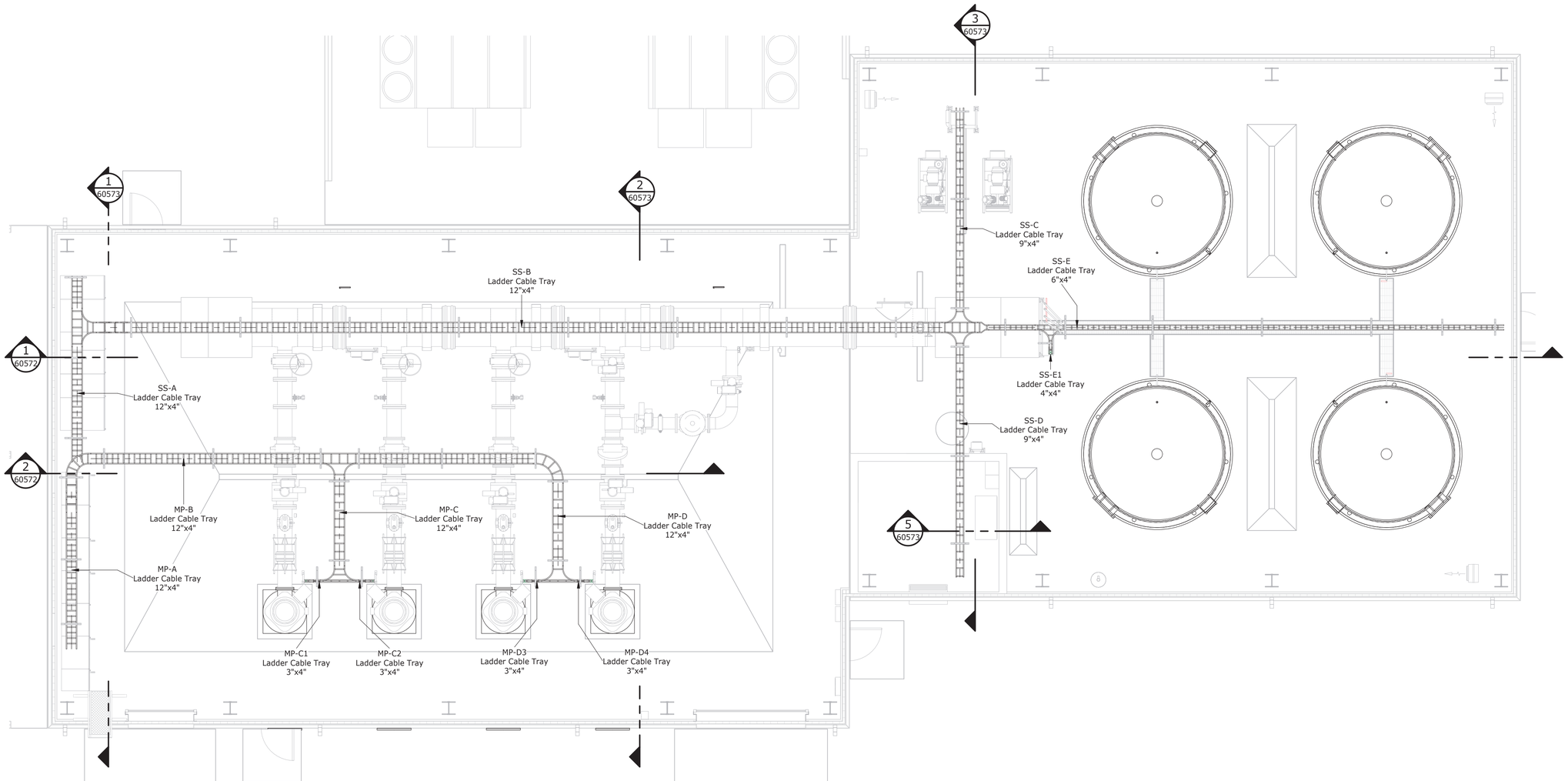

CABLE TRAY PLAN - POWER

Scale: 3/16" = 1'-0"

0 5' 10'

RECLAMATION
Managing Water in the West

ALWAYS THINK **SAFETY**

U.S. DEPARTMENT OF THE INTERIOR
BUREAU OF RECLAMATION

NAVAJO GALLUP WATER SUPPLY PROJECT
NEW MEXICO

SAN JUAN LATERAL
PUMPING PLANT NOS. 4 AND 7

DESIGNED	Darryl Liscomb
DRAWN	Darryl Liscomb
CHECKED	Robert D. Cass
TECH. APPR.	Lisa Gentry, P.E.
APPROVED	Jay Boggess Peer Reviewer - Manager, Electrical Design Group

DENVER, CO 2020-01-24

ELECTRICAL INSTALLATION

CABLE TRAY PLAN - POWER

1695-D-60571

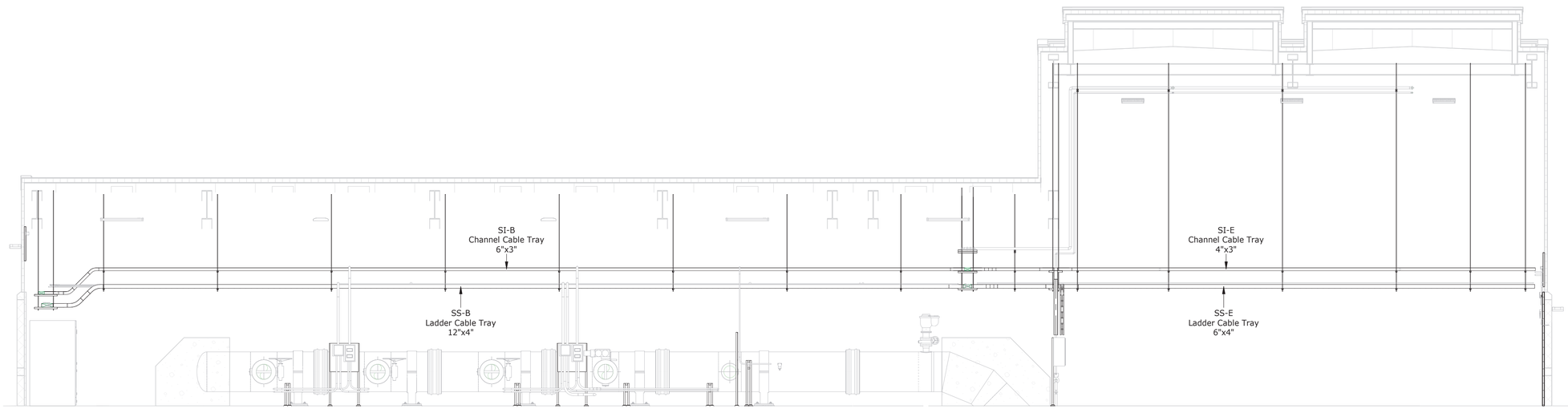

1 60570 CABLE TRAY SECTION - POWER AND INSTRUMENTATION
Scale: 3/16" = 1'-0"

0 5' 10'

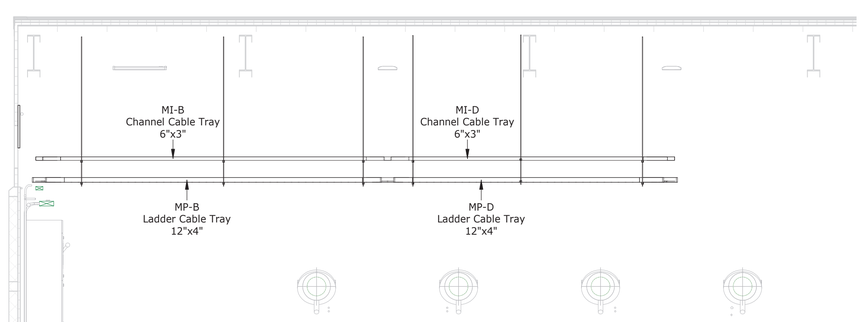

2 60570 CABLE TRAY SECTION - PUMP UNITS
Scale: 3/16" = 1'-0"

RECLAMATION
Managing Water in the West

ALWAYS THINK **SAFETY**

U.S. DEPARTMENT OF THE INTERIOR
BUREAU OF RECLAMATION
NAVAJO GALLUP WATER SUPPLY PROJECT
NEW MEXICO
SAN JUAN LATERAL
PUMPING PLANT NOS. 4 AND 7

Darryl Liscomb
DESIGNED
Darryl Liscomb
DRAWN
Robert D. Cass
CHECKED
TECH. APPR. Lisa Gentry, P.E.
APPROVED Jay Boggess
Peer Reviewer - Manager, Electrical Design Group

DENVER, CO 2020-01-24

ELECTRICAL INSTALLATION

CABLE TRAY SECTIONS - LONGITUDINAL

1695-D-60572

RECLAMATION
Managing Water in the West

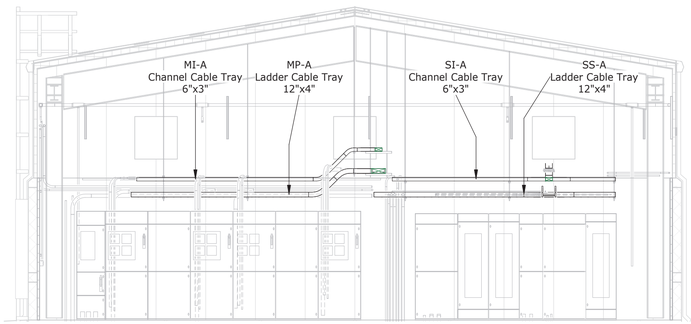

1 60570 CABLE TRAY SECTION - PUMP ROOM NORTH WALL
Scale: 3/16" = 1'-0"

0 5' 10'

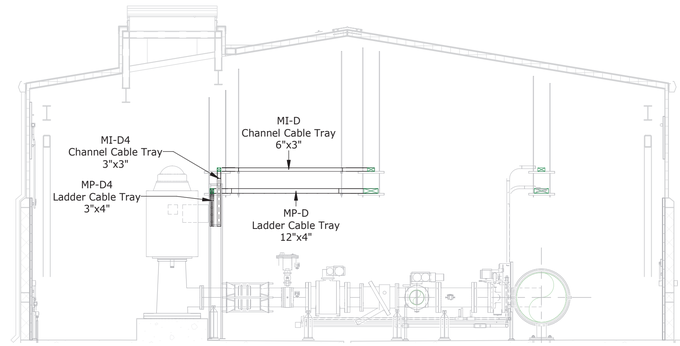

2 60570 CABLE TRAY SECTION - PUMP UNITS
Scale: 3/16" = 1'-0"

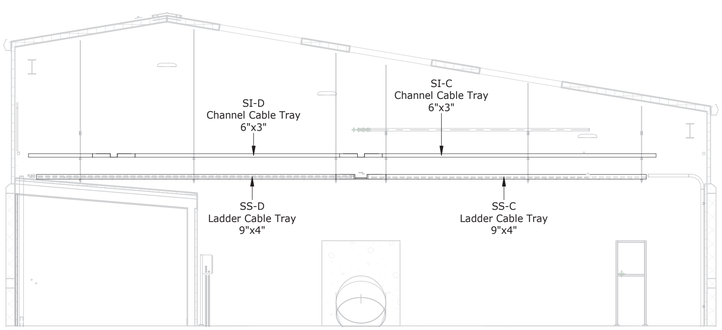

3 60570 CABLE TRAY SECTION - AIR CHAMBER ROOM
Scale: 3/16" = 1'-0"

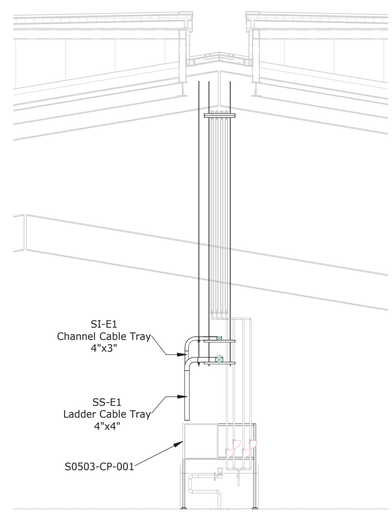

4 60570 CABLE TRAY SECTION - AIR CHAMBER CONTROL PANEL
Scale: 3/16" = 1'-0"

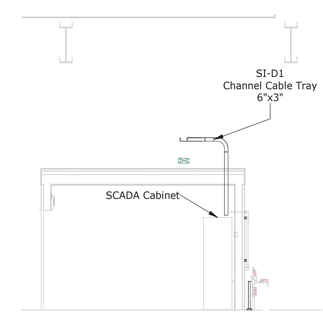

5 60570 CABLE TRAY SECTION - CONTROL ROOM
Scale: 3/16" = 1'-0"

ALWAYS THINK **SAFETY**

U.S. DEPARTMENT OF THE INTERIOR
BUREAU OF RECLAMATION
NAVAJO GALLUP WATER SUPPLY PROJECT
NEW MEXICO
SAN JUAN LATERAL
PUMPING PLANT NOS. 4 AND 7

Darryl Liscomb
DESIGNED
Darryl Liscomb
DRAWN
Robert D. Cass
CHECKED
TECH. APPR. Lisa Gentry, P.E.
APPROVED Jay Boggess
Peer Reviewer - Manager, Electrical Design Group

DENVER, CO 2020-01-24

ELECTRICAL INSTALLATION

CABLE TRAY TRANSVERSE SECTIONS

1695-D-60573

CABLE TRAY SCHEDULE - PUMPING UNIT POWER

CABLE TRAY SECTION	CONDUCTOR FUNCTION	CONDUCTOR SIZE	Cable Originating Point	Cable Terminating Point
MP-A	Unit 1 Power	3-1/c 1/0 AWG MV-105	S0502-MCE-101	S0502-P-U1 Motor
MP-A	Unit 2 Power	3-1/c 1/0 AWG MV-105	S0502-MCE-201	S0502-P-U2 Motor
MP-A	Unit 3 Power	3-1/c 1/0 AWG MV-105	S0502-MCE-301	S0502-P-U3 Motor
MP-A	Unit 4 Power	3-1/c 1/0 AWG MV-105	S0502-MCE-401	S0502-P-U4 Motor
MP-B	Unit 1 Power	3-1/c 1/0 AWG MV-105	S0502-MCE-101	S0502-P-U1 Motor
MP-B	Unit 2 Power	3-1/c 1/0 AWG MV-105	S0502-MCE-201	S0502-P-U2 Motor
MP-B	Unit 3 Power	3-1/c 1/0 AWG MV-105	S0502-MCE-301	S0502-P-U3 Motor
MP-B	Unit 4 Power	3-1/c 1/0 AWG MV-105	S0502-MCE-401	S0502-P-U4 Motor
MP-C	Unit 1 Power	3-1/c 1/0 AWG MV-105	S0502-MCE-101	S0502-P-U1 Motor
MP-C	Unit 2 Power	3-1/c 1/0 AWG MV-105	S0502-MCE-201	S0502-P-U2 Motor
MP-C1	Unit 1 Power	3-1/c 1/0 AWG MV-105	S0502-MCE-101	S0502-P-U1 Motor
MP-C2	Unit 2 Power	3-1/c 1/0 AWG MV-105	S0502-MCE-201	S0502-P-U2 Motor
MP-D	Unit 3 Power	3-1/c 1/0 AWG MV-105	S0502-MCE-301	S0502-P-U3 Motor
MP-D	Unit 4 Power	3-1/c 1/0 AWG MV-105	S0502-MCE-401	S0502-P-U4 Motor
MP-D3	Unit 3 Power	3-1/c 1/0 AWG MV-105	S0502-MCE-301	S0502-P-U3 Motor
MP-D4	Unit 4 Power	3-1/c 1/0 AWG MV-105	S0502-MCE-401	S0502-P-U4 Motor

CABLE TRAY SCHEDULE - PUMPING UNIT AUXILIARIES

CABLE TRAY SECTION	CONDUCTOR FUNCTION	CONDUCTOR SIZE	CABLE ORIGINATING POINT	CABLE TERMINATING POINT
MI-A	Unit 1 Heater	1-3/c 12 AWG	S0502-MCE-101	S0502-P-U1 Motor
MI-A	Unit 1 RTDs Signal	8-TRIAD 16 AWG	S0502-MCE-101	S0502-P-U1 Motor
MI-A	Unit 2 Heater	1-3/c 12 AWG	S0502-MCE-201	S0502-P-U2 Motor
MI-A	Unit 2 RTDs Signal	8-TRIAD 16 AWG	S0502-MCE-201	S0502-P-U2 Motor
MI-A	Unit 3 Heater	1-3/c 12 AWG	S0502-MCE-301	S0502-P-U3 Motor
MI-A	Unit 3 RTDs Signal	8-TRIAD 16 AWG	S0502-MCE-301	S0502-P-U3 Motor
MI-A	Unit 4 Heater	1-3/c 12 AWG	S0502-MCE-401	S0502-P-U4 Motor
MI-A	Unit 4 RTDs Signal	8-TRIAD 16 AWG	S0502-MCE-401	S0502-P-U4 Motor
MI-B	Unit 1 Heater	1-3/c 12 AWG	S0502-MCE-101	S0502-P-U1 Motor
MI-B	Unit 1 RTDs Signal	8-TRIAD 16 AWG	S0502-MCE-101	S0502-P-U1 Motor
MI-B	Unit 2 Heater	1-3/c 12 AWG	S0502-MCE-201	S0502-P-U2 Motor
MI-B	Unit 2 RTDs Signal	8-TRIAD 16 AWG	S0502-MCE-201	S0502-P-U2 Motor
MI-B	Unit 3 Heater	1-3/c 12 AWG	S0502-MCE-301	S0502-P-U3 Motor
MI-B	Unit 3 RTDs Signal	8-TRIAD 16 AWG	S0502-MCE-301	S0502-P-U3 Motor
MI-B	Unit 4 Heater	1-3/c 12 AWG	S0502-MCE-401	S0502-P-U4 Motor
MI-B	Unit 4 RTDs Signal	8-TRIAD 16 AWG	S0502-MCE-401	S0502-P-U4 Motor
MI-C	Unit 1 Heater	1-3/c 12 AWG	S0502-MCE-101	S0502-P-U1 Motor
MI-C	Unit 1 RTDs Signal	8-TRIAD 16 AWG	S0502-MCE-101	S0502-P-U1 Motor
MI-C	Unit 2 Heater	1-3/c 12 AWG	S0502-MCE-201	S0502-P-U2 Motor
MI-C	Unit 2 RTDs Signal	8-TRIAD 16 AWG	S0502-MCE-201	S0502-P-U2 Motor
MI-C1	Unit 1 Heater	1-3/c 12 AWG	S0502-MCE-101	S0502-P-U1 Motor
MI-C1	Unit 1 RTDs Signal	8-TRIAD 16 AWG	S0502-MCE-101	S0502-P-U1 Motor
MI-C2	Unit 2 Heater	1-3/c 12 AWG	S0502-MCE-201	S0502-P-U2 Motor
MI-C2	Unit 2 RTDs Signal	8-TRIAD 16 AWG	S0502-MCE-201	S0502-P-U2 Motor
MI-D	Unit 3 Heater	1-3/c 12 AWG	S0502-MCE-301	S0502-P-U3 Motor
MI-D	Unit 3 RTDs Signal	8-TRIAD 16 AWG	S0502-MCE-301	S0502-P-U3 Motor
MI-D	Unit 4 Heater	1-3/c 12 AWG	S0502-MCE-401	S0502-P-U4 Motor
MI-D	Unit 4 RTDs Signal	8-TRIAD 16 AWG	S0502-MCE-401	S0502-P-U4 Motor
MI-D3	Unit 3 Heater	1-3/c 12 AWG	S0502-MCE-301	S0502-P-U3 Motor
MI-D3	Unit 3 RTDs Signal	8-TRIAD 16 AWG	S0502-MCE-301	S0502-P-U3 Motor
MI-D4	Unit 4 Heater	1-3/c 12 AWG	S0502-MCE-401	S0502-P-U4 Motor
MI-D4	Unit 4 RTDs Signal	8-TRIAD 16 AWG	S0502-MCE-401	S0502-P-U4 Motor

RECLAMATION
Managing Water in the West

ALWAYS THINK **SAFETY**

U.S. DEPARTMENT OF THE INTERIOR
BUREAU OF RECLAMATION
NAVAJO GALLUP WATER SUPPLY PROJECT
NEW MEXICO
SAN JUAN LATERAL
PUMPING PLANT NOS. 4 AND 7

Darryl Liscomb
DESIGNED
Darryl Liscomb
DRAWN
Robert D. Cass
CHECKED
TECH. APPR. Lisa Gentry, P.E.
APPROVED Jay Boggess
Peer Reviewer - Manager, Electrical Design Group

DENVER, CO 2020-01-24

ELECTRICAL INSTALLATION

CABLE TRAY SCHEDULE - PUMP UNITS

1695-D-60574

CABLE TRAY SCHEDULE SECTIONS A-D STATION SERVICE POWER

CABLE TRAY SECTION	CONDUCTOR FUNCTION	CONDUCTOR SIZE	CABLE ORIGINATING POINT	CABLE TERMINATING POINT
SS-A	Bus Protection UPS	1-3/c 12 AWG	S0503-PNL-001	S0501-SWGR-001
SS-A	Door 2 Motor Operator	1-4/c 12 AWG	S0502-SWBD-201	Rollup Door 2 Motor Operator
SS-A	Engine Generator Battery Charger	1-3/c 12 AWG	S0503-PNL-001	Engine Generator
SS-A	Engine Generator Battery Heater	1-3/c 12 AWG	S0503-PNL-001	Engine Generator
SS-A	Engine Generator Coolant Heater	1-3/c 12 AWG	S0503-PNL-001	Engine Generator
SS-A	Lighting Control Panel	1-4/c 10 AWG	S0502-SWBD-301	S0502-LCP-001
SS-A	RTU-1 Power	1-4/c 1/0 AWG	S0502-SWBD-201	RTU-1
SS-A	RTU-2 Power	1-4/c 1/0 AWG	S0502-SWBD-301	RTU-2
SS-A	S0501-SWGR-001 Cabinet Heater Power	1-3/c 10 AWG	S0503-PNL-001	S0501-SWGR-001
SS-A	S0501-SWGR-001 Lights & Receptacles	1-3/c 12 AWG	S0503-PNL-001	S0501-SWGR-001
SS-A	S0501-VCB-001 Control Power	1-3/c 12 AWG	S0503-PNL-001	S0501-VCB-001
SS-A	S0501-VCB-002 Control Power	1-3/c 12 AWG	S0503-PNL-001	S0501-VCB-002
SS-A	S0501-VCB-003 Control Power	1-3/c 12 AWG	S0503-PNL-001	S0501-VCB-003
SS-A	S0502-MBFV-U4-4 Power	1-4/c 12 AWG	S0502-SWBD-101	S0502-MBFV-U4-4
SS-A	S0502-MBFV-U4-5 Power	1-4/c 12 AWG	S0502-SWBD-101	S0502-MBFV-U4-5
SS-A	S0502-MBFV-U4-7 Power	1-4/c 12 AWG	S0502-SWBD-101	S0502-MBFV-U4-7
SS-A	S0502-MBV-U1-2 Power	1-4/c 12 AWG	S0502-SWBD-101	S0502-MBV-U1-2
SS-A	S0502-MBV-U2-2 Power	1-4/c 12 AWG	S0502-SWBD-101	S0502-MBV-U2-2
SS-A	S0502-MBV-U3-2 Power	1-4/c 12 AWG	S0502-SWBD-101	S0502-MBV-U3-2
SS-A	S0502-MBV-U4-2 Power	1-4/c 12 AWG	S0502-SWBD-101	S0502-MBV-U4-2
SS-A	S0503-480 Volt Receptacle Power	1-4/c 4 AWG	S0502-SWBD-201	S0503-480 Volt Receptacle
SS-A	S0503-C-101	1-4/c 6 AWG	S0502-SWBD-101	S0503-C-101 Motor Controller
SS-A	S0503-C-201	1-4/c 6 AWG	S0502-SWBD-101	S0503-C-201 Motor Controller
SS-A	S0503-XFMR-T-001 Power	1-4/c 6 AWG	S0502-SWBD-301	S0503-XFMR-T-001
SS-A	UH-1 Power	1-4/c 12 AWG	S0502-SWBD-201	UH-1
SS-A	UH-2 Power	1-4/c 12 AWG	S0502-SWBD-301	UH-2
SS-A	UH-3 Power	1-4/c 12 AWG	S0502-SWBD-201	UH-3
SS-B	Bus Protection UPS	1-3/c 12 AWG	S0503-PNL-001	S0501-SWGR-001
SS-B	Engine Generator Battery Charger	1-3/c 12 AWG	S0503-PNL-001	Engine Generator
SS-B	Engine Generator Battery Heater	1-3/c 12 AWG	S0503-PNL-001	Engine Generator
SS-B	Engine Generator Coolant Heater	1-3/c 12 AWG	S0503-PNL-001	Engine Generator
SS-B	Lighting Control Panel	1-5/c 10 AWG	S0502-SWBD-301	S0502-LCP-001
SS-B	Roll-up Door 2 Motor Operator	1-4/c 12 AWG	S0502-SWBD-201	Rollup Door 2
SS-B	RTU-1 Power	1-4/c 1/0 AWG	S0502-SWBD-201	RTU-1
SS-B	RTU-2 Power	1-4/c 1/0 AWG	S0502-SWBD-301	RTU-2
SS-B	S0501-SWBD-001 Cabinet Heater Power	1-3/c 10 AWG	S0503-PNL-001	S0501-SWGR-001
SS-B	S0501-SWBD-001 Lights & Receptacles	1-3/c 12 AWG	S0503-PNL-001	S0501-SWGR-001
SS-B	S0501-VCB-001 Control Power	1-3/c 12 AWG	S0503-PNL-001	S0501-VCB-001
SS-B	S0501-VCB-002 Control Power	1-3/c 12 AWG	S0503-PNL-001	S0501-VCB-002
SS-B	S0501-VCB-003 Control Power	1-3/c 12 AWG	S0503-PNL-001	S0501-VCB-003
SS-B	S0502-FIT-101 Power	1-3/c 12 AWG	S0503-PNL-001	S0502-FIT-101
SS-B	S0502-FIT-201 Power	1-3/c 12 AWG	S0503-PNL-001	S0502-FIT-201
SS-B	S0502-FIT-301 Power	1-3/c 12 AWG	S0503-PNL-001	S0502-FIT-301
SS-B	S0502-FIT-401 Power	1-3/c 12 AWG	S0503-PNL-001	S0502-FIT-401
SS-B	S0502-MBFV-U4-4 Power	1-4/c 12 AWG	S0502-SWBD-101	S0502-MBFV-U4-4
SS-B	S0502-MBFV-U4-5 Power	1-4/c 12 AWG	S0502-SWBD-101	S0502-MBFV-U4-5
SS-B	S0502-MBFV-U4-7 Power	1-4/c 12 AWG	S0502-SWBD-101	S0502-MBFV-U4-7
SS-B	S0502-MBV-U1-2 Power	1-4/c 12 AWG	S0502-SWBD-101	S0502-MBV-U1-2
SS-B	S0502-MBV-U2-2 Power	1-4/c 12 AWG	S0502-SWBD-101	S0502-MBV-U2-2
SS-B	S0502-MBV-U3-2 Power	1-4/c 12 AWG	S0502-SWBD-101	S0502-MBV-U3-2
SS-B	S0502-MBV-U4-2 Power	1-4/c 12 AWG	S0502-SWBD-101	S0502-MBV-U4-2
SS-B	S0503-480 Volt Receptacle	1-4/c 4 AWG	S0502-SWBD-201	S0503-480 Volt Receptacle
SS-B	S0503-C-101 Power	1-4/c 6 AWG	S0502-SWBD-101	S0503-C-101
SS-B	S0503-C-201 Power	1-4/c 6 AWG	S0502-SWBD-101	S0503-C-201
SS-B	S0503-XFMR-T-001 Power	1-4/c 6 AWG	S0502-SWBD-301	S0503-XFMR-T-001
SS-B	UH-1 Power	1-4/c 12 AWG	S0502-SWBD-301	UH-1
SS-B	UH-2 Power	1-4/c 12 AWG	S0502-SWBD-301	UH-2
SS-B	UH-3 Power	1-4/c 12 AWG	S0502-SWBD-201	UH-3
SS-C	S0503-C-101 Control	1-5/c 12 AWG	S0503-CP-001	S0503-C-101 Motor Controller
SS-C	S0503-C-101 Power	1-4/c 6 AWG	S0502-SWBD-101	S0503-C-101 Motor Controller
SS-C	S0503-C-201 Control	1-5/c 12 AWG	S0503-CP-001	S0503-C-201 Motor Controller
SS-C	S0503-C-201 Power	1-4/c 6 AWG	S0502-SWBD-101	S0503-C-201 Motor Controller
SS-C	UH-1 Power	1-4/c 12 AWG	S0502-SWBD-101	UH-1
SS-D	Air Chamber Control Power	1-3/c 12 AWG	S0503-PNL-001	S0503-CP-001
SS-D	Bus Protection UPS	1-3/c 12 AWG	S0503-PNL-001	S0501-SWGR-001
SS-D	Engine Generator Battery Charger	1-3/c 12 AWG	S0503-PNL-001	Engine Generator
SS-D	Engine Generator Battery Heater	1-3/c 12 AWG	S0503-PNL-001	Engine Generator
SS-D	Engine Generator Coolant Heater	1-3/c 12 AWG	S0503-PNL-001	Engine Generator
SS-D	Impressed Current Cathodic Protection	1-3/c 12 AWG	S0503-PNL-001	Cathodic Protection Rectifier Cabinet
SS-D	Roll-up Door 2 Motor Operator	1-4/c 12 AWG	S0502-SWBD-201	Rollup Door 2
SS-D	S0501-SWBD-001 Cabinet Heater Power	1-3/c 10 AWG	S0503-PNL-001	S0501-SWGR-001
SS-D	S0501-SWBD-001 Lights & Receptacles	1-3/c 12 AWG	S0503-PNL-001	S0501-SWGR-001
SS-D	S0501-VCB-001 Control Power	1-3/c 12 AWG	S0503-PNL-001	S0501-VCB-001
SS-D	S0501-VCB-002 Control Power	1-3/c 12 AWG	S0503-PNL-001	S0501-VCB-002
SS-D	S0501-VCB-003 Control Power	1-3/c 12 AWG	S0503-PNL-001	S0501-VCB-003
SS-D	S0502-FIT-101 Power	1-3/c 12 AWG	S0503-PNL-001	S0502-FIT-101
SS-D	S0502-FIT-201 Power	1-3/c 12 AWG	S0503-PNL-001	S0502-FIT-201
SS-D	S0502-FIT-301 Power	1-3/c 12 AWG	S0503-PNL-001	S0502-FIT-301
SS-D	S0502-FIT-401 Power	1-3/c 12 AWG	S0503-PNL-001	S0502-FIT-401
SS-D	S0502-LCP-001	1-4/c 10 AWG	S0502-SWBD-301	S0502-LCP-001
SS-D	S0503-XFMR-T-001 Power	1-4/c 6 AWG	S0502-SWBD-301	S0503-XFMR-T-001

CABLE TRAY SCHEDULE SECTION E - STATION SERVICE POWER

CABLE TRAY SECTION	CONDUCTOR FUNCTION	CONDUCTOR SIZE	CABLE ORIGINATING POINT	CABLE TERMINATING POINT
SS-E	Air Chamber Control Power	1-3/c 12 AWG	S0503-PNL-001	S0503-CP-001
SS-E	Impressed Current Cathodic Protection	1-3/c 12 AWG	S0503-PNL-001	Cathodic Protection Rectifier Cabinet
SS-E	S0503-C-101 Control	1-5/c 12 AWG	S0503-CP-001	S0503-C-101 Motor Controller
SS-E	S0503-C-201 Control	1-5/c 12 AWG	S0503-CP-001	S0503-C-201 Motor Controller
SS-E	UH-2 Power	1-4/c 12 AWG	S0502-SWBD-301	UH-2
SS-E	UH-3 Power	1-4/c 12 AWG	S0502-SWBD-201	UH-3
SS-E1	Air Chamber Control Power	1-3/c 12 AWG	S0503-PNL-001	S0503-CP-001
SS-E1	S0503-C-101 Control	1-5/c 12 AWG	S0503-CP-001	S0503-C-101 Motor Controller
SS-E1	S0503-C-201 Control	1-5/c 12 AWG	S0503-CP-001	S0503-C-201 Motor Controller

RECLAMATION
Managing Water in the West

ALWAYS THINK **SAFETY**

U.S. DEPARTMENT OF THE INTERIOR
BUREAU OF RECLAMATION
NAVAJO GALLUP WATER SUPPLY PROJECT
NEW MEXICO
SAN JUAN LATERAL
PUMPING PLANT NOS. 4 AND 7

Darryl Liscomb
DESIGNED
Darryl Liscomb
DRAWN
Robert D. Cass
CHECKED
TECH. APPR. Lisa Gentry, P.E.
APPROVED Jay Boggess
Peer Reviewer - Manager, Electrical Design Group

DENVER, CO 2020-01-24

ELECTRICAL INSTALLATION

CABLE TRAY SCHEDULE - PUMPING PLANT NO. 4 POWER

1695-D-60575

CABLE TRAY SCHEDULE SECTIONS A-D - STATION INSTRUMENTATION

CABLE TRAY SECTION	CONDUCTOR FUNCTION	CONDUCTOR SIZE	CABLE ORIGINATING POINT	CABLE TERMINATING POINT
SI-A	DFO Tank Level Signal	2-TSP 16 AWG	SCADA Cabinet	Engine Generator
SI-A	North Gate Open Sensor	1-3/c 14 AWG	Security Cabinet	North Gate Balanced Magnetic Switch
SI-A	S0501-SWGR-001 Modbus	2-RS-485	SCADA Cabinet	S0501-SWGR-001
SI-A	S0502-MCE-001 Modbus	2-RS-485	SCADA Cabinet	S0502-MCE-001
SI-A	S0502-SWBD-001 Modbus	2-RS-485	SCADA Cabinet	S0502-SWBD-ATS-001
SI-A	S0502-ZSC-501 Signal	1-3/c 14 AWG	Security Cabinet	Pump Room Door 101 Open Sensor
SI-A	Security Camera 5 Signal	2-CAT 6	Communication Rack	Security Camera 5
SI-B	Diesel Fuel Oil Tank Level Signal	2-TSP 16 AWG	SCADA Cabinet	Engine Generator
SI-B	North Gate Open Sensor	1-3/c 14 AWG	Security Cabinet	North Gate Balanced Magnetic Switch
SI-B	S0501-SWGR-001 Modbus	2-RS-485	SCADA Cabinet	S0501-SWGR-001
SI-B	S0502-MCE-001 Modbus	2-RS-485	SCADA Cabinet	S0502-MCE-001
SI-B	S0502-PIT-502 Signal	2-TSP 16 AWG	SCADA Cabinet	S0502-PIT-502
SI-B	S0502-PS-102 Signal	1-3/c 14 AWG	SCADA Cabinet	S0502-PS-102
SI-B	S0502-PS-202 Signal	1-3/c 14 AWG	SCADA Cabinet	S0502-PS-202
SI-B	S0502-PS-302 Signal	1-3/c 14 AWG	SCADA Cabinet	S0502-PS-302
SI-B	S0502-PS-402 Signal	1-3/c 14 AWG	SCADA Cabinet	S0502-PS-402
SI-B	S0502-SWBD-001 Modbus	2-RS-485	SCADA Cabinet	S0502-SWBD-ATS-001
SI-B	Security Camera 2 Signal	2-CAT 6	Communication Rack	Security Camera 2
SI-B	Security Camera 5 Signal	2-CAT 6	Communication Rack	Security Camera 5
SI-B	U1 & U2 Manifold Modbus	2-RS-485	SCADA Cabinet	S0502-MBV-U1-2
SI-B	U3 & U4 Manifold Modbus	2-RS-485	SCADA Cabinet	S0502-MBV-U3-2
SI-C	Facility Communications	1-24 Strand Optical Fiber Cable	NTUA	Communication Rack
SI-C	S0503-C-101 Running Signal	1-3/c 14 AWG	S0503-CP-001	S0503-C-101 Motor Controller
SI-C	S0503-C-101 Start	1-3/c 12 AWG	S0503-CP-001	S0503-C-101 Motor Controller
SI-C	S0503-C-201 Running Signal	1-3/c 14 AWG	S0503-CP-001	S0503-C-201 Motor Controller
SI-C	S0503-C-201 Start	1-3/c 12 AWG	S0503-CP-001	S0503-C-201 Motor Controller
SI-D	Air Chamber Control Modbus	2-RS-485	S0503-CP-001	SCADA Cabinet
SI-D	DFO Tank Level	2-TSP 16 AWG	SCADA Cabinet	Engine Generator
SI-D	North Gate Open Sensor	1-3/c 14 AWG	Security Cabinet	North Gate Balanced Magnetic Switch
SI-D	S0501-SWGR-001 Modbus	2-RS-485	SCADA Cabinet	S0501-SWGR-001
SI-D	S0502-MCE-001 Modbus	2-RS-485	SCADA Cabinet	S0502-MCE-001
SI-D	S0502-PIT-502 Signal	2-TSP 16 AWG	SCADA Cabinet	S0502-PIT-502
SI-D	S0502-PS-102 Signal	1-3/c 14 AWG	SCADA Cabinet	S0502-PS-102
SI-D	S0502-PS-202 Signal	1-3/c 14 AWG	SCADA Cabinet	S0502-PS-202
SI-D	S0502-PS-302 Signal	1-3/c 14 AWG	SCADA Cabinet	S0502-PS-302
SI-D	S0502-PS-402 Signal	1-3/c 14 AWG	SCADA Cabinet	S0502-PS-402
SI-D	S0502-SWBD-001 Modbus	2-RS-485	SCADA Cabinet	S0502-SWBD-ATS-001
SI-D	S0502-ZSC-501 Signal	1-3/c 14 AWG	Security Cabinet	Pump Room Door 101 Open Sensor
SI-D	S0502-ZSC-503 Signal	1-3/c 14 AWG	Security Cabinet	Pump Room Door 103 Open Sensor
SI-D	S0502-ZSC-505 Signal	1-3/c 14 AWG	Security Cabinet	Pump Room Door 105 Open Sensor
SI-D	S0503-LS-101 & S0503-LS-102 Signal	1-5/c 14 AWG	SCADA Cabinet	S0503-LS-101 & S0503-LS-102
SI-D	S0503-LS-201 & S0503-LS-202 Signal	1-5/c 14 AWG	SCADA Cabinet	S0503-LS-201 & S0503-LS-202
SI-D	S0503-LS-301 & S0503-LS-302 Signal	1-5/c 14 AWG	SCADA Cabinet	S0503-LS-301 & S0503-LS-302
SI-D	S0503-LS-401 & S0503-LS-402 Signal	1-5/c 14 AWG	SCADA Cabinet	S0503-LS-401 & S0503-LS-402
SI-D	S0503-ZSC-101 & S0503-ZSO-101 Signal	1-5/c 14 AWG	SCADA Cabinet	S0503-ZSC-101 & S0503-ZSO-101
SI-D	S0503-ZSC-201 & S0503-ZSO-201 Signal	1-5/c 14 AWG	SCADA Cabinet	S0503-ZSC-201 & S0503-ZSO-201
SI-D	S0503-ZSC-301 & S0503-ZSO-301 Signal	1-5/c 14 AWG	SCADA Cabinet	S0503-ZSC-301 & S0503-ZSO-301
SI-D	S0503-ZSC-401 & S0503-ZSO-401 Signal	1-5/c 14 AWG	SCADA Cabinet	S0503-ZSC-401 & S0503-ZSO-401
SI-D	S0503-ZSC-502 Signal	1-3/c 14 AWG	Security Cabinet	Air Chamber Room Door 102 Open Sensor
SI-D	Security Camera 1 Signal	2-CAT 6	Communication Rack	Security Camera 1
SI-D	Security Camera 2 Signal	2-CAT 6	Communication Rack	Security Camera 4
SI-D	Security Camera 3 Signal	2-CAT 6	Communication Rack	Security Camera 3
SI-D	Security Camera 4 Signal	2-CAT 6	Communication Rack	Security Camera 4
SI-D	Security Camera 5 Signal	2-CAT 6	Communication Rack	Security Camera 5
SI-D	South Gate Open Sensor	1-3/c 14 AWG	Security Cabinet	South Gate Balanced Magnetic Switch
SI-D	U1 & U2 Manifold Modbus	2-RS-485	SCADA Cabinet	Various
SI-D	U3 & U4 Manifold Modbus	2-RS-485	SCADA Cabinet	Various
SI-D1	Air Chamber Communications	2-RS-485	Air Chamber Control Panel	SCADA Cabinet
SI-D1	DFO Tank Level	2-TSP 16 AWG	SCADA Cabinet	Engine Generator
SI-D1	North Gate Open Sensor	1-3/c 14 AWG	Security Cabinet	North Gate Balanced Magnetic Switch
SI-D1	S0501-SWGR-001 Modbus	2-RS-485	SCADA Cabinet	S0501-SWGR-001
SI-D1	S0502-MCE-001 Modbus	2-RS-485	SCADA Cabinet	S0502-MCE-001
SI-D1	S0502-PS-102	1-3/c 14 AWG	SCADA Cabinet	S0502-PS-102
SI-D1	S0502-PS-202	1-3/c 14 AWG	SCADA Cabinet	S0502-PS-202
SI-D1	S0502-PS-302	1-3/c 14 AWG	SCADA Cabinet	S0502-PS-302
SI-D1	S0502-PS-402	1-3/c 14 AWG	SCADA Cabinet	S0502-PS-402
SI-D1	S0502-SWBD-001 Modbus	2-RS-485	SCADA Cabinet	S0502-SWBD-ATS-001
SI-D1	S0503-LS-101 & S0503-LS-102	1-5/c 14 AWG	SCADA Cabinet	S0503-LS-101 & S0503-LS-102
SI-D1	S0503-LS-201 & S0503-LS-202	1-5/c 14 AWG	SCADA Cabinet	S0503-LS-201 & S0503-LS-202
SI-D1	S0503-LS-301 & S0503-LS-302	1-5/c 14 AWG	SCADA Cabinet	S0503-LS-301 & S0503-LS-302
SI-D1	S0503-LS-401 & S0503-LS-402	1-5/c 14 AWG	SCADA Cabinet	S0503-LS-401 & S0503-LS-402
SI-D1	S0503-ZSC-101 & S0503-ZSO-101	1-5/c 14 AWG	SCADA Cabinet	S0503-ZSC-101 & S0503-ZSO-101
SI-D1	S0503-ZSC-201 & S0503-ZSO-201	1-5/c 14 AWG	SCADA Cabinet	S0503-ZSC-201 & S0503-ZSO-201
SI-D1	S0503-ZSC-301 & S0503-ZSO-301	1-5/c 14 AWG	SCADA Cabinet	S0503-ZSC-301 & S0503-ZSO-301
SI-D1	S0503-ZSC-401 & S0503-ZSO-401	1-5/c 14 AWG	SCADA Cabinet	S0503-ZSC-401 & S0503-ZSO-401
SI-D1	Security Camera 2 Signal	2-CAT 6	Communication Rack	Security Camera 2
SI-D1	Security Camera 4 Signal	2-CAT 6	Communication Rack	Security Camera 4
SI-D1	Security Camera 5 Signal	2-CAT 6	Communication Rack	Security Camera 5
SI-D1	South Gate Open Sensor	1-3/c 14 AWG	Security Cabinet	South Gate Balanced Magnetic Switch
SI-D1	U1 & U2 Manifold Modbus	2-RS-485	SCADA Cabinet	Various
SI-D1	U3 & U4 Manifold Modbus	2-RS-485	SCADA Cabinet	Various

CABLE TRAY SCHEDULE SECTION E - STATION INSTRUMENTATION

CABLE TRAY SECTION	CONDUCTOR FUNCTION	CONDUCTOR SIZE	CABLE ORIGINATING POINT	CABLE TERMINATING POINT
SI-E	Air Chamber Control Modbus	2-RS-485	S0503-CP-001	SCADA Cabinet
SI-E	S0503-C-101 Running	1-3/c 14 AWG	S0503-CP-001	S0503-C-101 Motor Controller
SI-E	S0503-C-101 Start	1-3/c 12 AWG	S0503-CP-001	S0503-C-101 Motor Controller
SI-E	S0503-C-201 Running	1-3/c 14 AWG	S0503-CP-001	S0503-C-201 Motor Controller
SI-E	S0503-C-201 Start	1-3/c 12 AWG	S0503-CP-001	S0503-C-201 Motor Controller
SI-E	S0503-LS-101 & S0503-LS-102 Signal	1-5/c 14 AWG	SCADA Cabinet	S0503-LS-101 & S0503-LS-102
SI-E	S0503-LS-201 & S0503-LS-202 Signal	1-5/c 14 AWG	SCADA Cabinet	S0503-LS-201 & S0503-LS-202
SI-E	S0503-LS-301 & S0503-LS-302 Signal	1-5/c 14 AWG	SCADA Cabinet	S0503-LS-301 & S0503-LS-302
SI-E	S0503-LS-401 & S0503-LS-402 Signal	1-5/c 14 AWG	SCADA Cabinet	S0503-LS-401 & S0503-LS-402
SI-E	S0503-ZSC-101 & S0503-ZSO-101 Signal	1-5/c 14 AWG	SCADA Cabinet	S0503-ZSC-101 & S0503-ZSO-101
SI-E	S0503-ZSC-201 & S0503-ZSO-201 Signal	1-5/c 14 AWG	SCADA Cabinet	S0503-ZSC-201 & S0503-ZSO-201
SI-E	S0503-ZSC-301 & S0503-ZSO-301 Signal	1-5/c 14 AWG	SCADA Cabinet	S0503-ZSC-301 & S0503-ZSO-301
SI-E	S0503-ZSC-401 & S0503-ZSO-401 Signal	1-5/c 14 AWG	SCADA Cabinet	S0503-ZSC-401 & S0503-ZSO-401
SI-E	S0503-ZSC-502 Signal	1-3/c 14 AWG	Security Cabinet	Air Chamber Room Door 102 Open Sensor
SI-E	Security Camera 4 Signal	2-CAT 6	Communication Rack	Security Camera 4
SI-E	South Gate Open Sensor	1-3/c 14 AWG	Security Cabinet	South Gate Balanced Magnetic Switch
SI-E1	Air Chamber Communications	2-RS-485	S0503-CP-001	SCADA Cabinet
SI-E1	S0503-C-101 Signals	1-9/C 14 AWG	S0503-CP-001	S0503-C-101 Motor Controller
SI-E1	S0503-C-201 Signals	1-9/C 14 AWG	S0503-CP-001	S0503-C-201 Motor Controller

RECLAMATION
Managing Water in the West

ALWAYS THINK **SAFETY**

U.S. DEPARTMENT OF THE INTERIOR
BUREAU OF RECLAMATION
NAVAJO GALLUP WATER SUPPLY PROJECT
NEW MEXICO
SAN JUAN LATERAL
PUMPING PLANT NOS. 4 AND 7

Darryl Liscomb
DESIGNED
Darryl Liscomb
DRAWN
Robert D. Cass
CHECKED
TECH. APPR. Lisa Gentry, P.E.
APPROVED Jay Boggess
Peer Reviewer - Manager, Electrical Design Group

DENVER, CO 2020-01-24

ELECTRICAL INSTALLATION

CABLE TRAY SCHEDULE - PUMPING PLANT NO. 4 INSTRUMENTATION

1695-D-60576

CABLE TRAY SCHEDULE SECTIONS A-D - STATION SERVICE POWER

CABLE TRAY SECTION	CONDUCTOR FUNCTION	CONDUCTOR SIZE	CABLE ORIGINATING POINT	CABLE TERMINATING POINT
SS-A	S0603-XFMR-T-001 Power	1-4/c 6 AWG	S0602-SWBD-301	S0603-XFMR-T-001
SS-A	Lighting Control Panel	1-4/c 10 AWG	S0602-SWBD-301	S0602-LCP-001
SS-A	RTU-1 Power	1-4/c 1/0 AWG	S0602-SWBD-201	RTU-1
SS-A	RTU-2 Power	1-4/c 1/0 AWG	S0602-SWBD-301	RTU-2
SS-A	S0603-480 Volt Receptacle Power	1-4/c 4 AWG	S0602-SWBD-201	S0603-480 Volt Receptacle
SS-A	Door 2 Motor Operator	1-4/c 12 AWG	S0602-SWBD-201	Rollup Door 2 Motor Operator
SS-A	S0602-MBFV-U4-4 Power	1-4/c 12 AWG	S0602-SWBD-101	S0602-MBFV-U4-4
SS-A	S0602-MBFV-U4-7 Power	1-4/c 12 AWG	S0602-SWBD-101	S0602-MBFV-U4-7
SS-A	S0603-C-201	1-4/c 6 AWG	S0602-SWBD-101	S0603-C-201 Motor Controller
SS-A	S0603-C-101	1-4/c 6 AWG	S0602-SWBD-101	S0603-C-101 Motor Controller
SS-A	S0602-MBFV-U4-5 Power	1-4/c 12 AWG	S0602-SWBD-101	S0602-MBFV-U4-5
SS-A	S0602-MBV-U4-2 Power	1-4/c 12 AWG	S0602-SWBD-101	S0602-MBV-U4-2
SS-A	S0602-MBV-U3-2 Power	1-4/c 12 AWG	S0602-SWBD-101	S0602-MBV-U3-2
SS-A	S0602-MBV-U2-2 Power	1-4/c 12 AWG	S0602-SWBD-101	S0602-MBV-U2-2
SS-A	S0602-MBV-U1-2 Power	1-4/c 12 AWG	S0602-SWBD-101	S0602-MBV-U1-2
SS-A	Engine Generator Coolant Heater	1-3/c 12 AWG	S0603-PNL-001	Engine Generator
SS-A	Engine Generator Battery Charger	1-3/c 12 AWG	S0603-PNL-001	Engine Generator
SS-A	Engine Generator Battery Heater	1-3/c 12 AWG	S0603-PNL-001	Engine Generator
SS-A	S0601-VCB-001 Control Power	1-3/c 12 AWG	S0603-PNL-001	S0601-VCB-001
SS-A	S0601-VCB-002 Control Power	1-3/c 12 AWG	S0603-PNL-001	S0601-VCB-002
SS-A	S0601-VCB-003 Control Power	1-3/c 12 AWG	S0603-PNL-001	S0601-VCB-003
SS-A	Bus Protection UPS	1-3/c 12 AWG	S0603-PNL-001	S0601-SWGR-001
SS-A	S0601-SWGR-001 Cabinet Heater Power	1-3/c 10 AWG	S0603-PNL-001	S0601-SWGR-001
SS-A	S0601-SWGR-001 Lights & Receptacles	1-3/c 12 AWG	S0603-PNL-001	S0601-SWGR-001
SS-A	UH-2 Power	1-4/c 12 AWG	S0602-SWBD-301	UH-2
SS-A	UH-1 Power	1-4/c 12 AWG	S0602-SWBD-201	UH-1
SS-A	UH-3 Power	1-4/c 12 AWG	S0602-SWBD-201	UH-3
SS-B	S0603-XFMR-T-001 Power	1-4/c 6 AWG	S0602-SWBD-301	S0603-XFMR-T-001
SS-B	RTU-1 Power	1-4/c 1/0 AWG	S0602-SWBD-201	RTU-1
SS-B	S0603-480 Volt Receptacle	1-4/c 4 AWG	S0602-SWBD-201	S0603-480 Volt Receptacle
SS-B	Lighting Control Panel	1-5/c 10 AWG	S0602-SWBD-301	S0602-LCP-001
SS-B	Roll-up Door 2 Motor Operator	1-4/c 12 AWG	S0602-SWBD-201	Rollup Door 2
SS-B	S0602-MBFV-U4-4 Power	1-4/c 12 AWG	S0602-SWBD-101	S0602-MBFV-U4-4
SS-B	S0602-MBFV-U4-7 Power	1-4/c 12 AWG	S0602-SWBD-101	S0602-MBFV-U4-7
SS-B	S0603-C-201 Power	1-4/c 6 AWG	S0602-SWBD-101	S0603-C-201
SS-B	S0603-C-101 Power	1-4/c 6 AWG	S0602-SWBD-101	S0603-C-101
SS-B	S0602-MBFV-U4-5 Power	1-4/c 12 AWG	S0602-SWBD-101	S0602-MBFV-U4-5
SS-B	S0602-MBV-U4-2 Power	1-4/c 12 AWG	S0602-SWBD-101	S0602-MBV-U4-2
SS-B	S0602-MBV-U3-2 Power	1-4/c 12 AWG	S0602-SWBD-101	S0602-MBV-U3-2
SS-B	S0602-MBV-U2-2 Power	1-4/c 12 AWG	S0602-SWBD-101	S0602-MBV-U2-2
SS-B	S0601-VCB-001 Control Power	1-3/c 12 AWG	S0603-PNL-001	S0601-VCB-001
SS-B	S0601-VCB-002 Control Power	1-3/c 12 AWG	S0603-PNL-001	S0601-VCB-002
SS-B	S0601-VCB-003 Control Power	1-3/c 12 AWG	S0603-PNL-001	S0601-VCB-003
SS-B	Bus Protection UPS	1-3/c 12 AWG	S0603-PNL-001	S0601-SWGR-001
SS-B	S0601-SWGR-001 Cabinet Heater Power	1-3/c 10 AWG	S0603-PNL-001	S0601-SWGR-001
SS-B	Engine Generator Coolant Heater	1-3/c 12 AWG	S0603-PNL-001	Engine Generator
SS-B	Engine Generator Battery Charger	1-3/c 12 AWG	S0603-PNL-001	Engine Generator
SS-B	Engine Generator Battery Heater	1-3/c 12 AWG	S0603-PNL-001	Engine Generator
SS-B	S0601-SWGR-001 Lights & Receptacles	1-3/c 12 AWG	S0603-PNL-001	S0601-SWGR-001
SS-B	S0602-MBV-U1-2 Power	1-4/c 12 AWG	S0602-SWBD-101	S0602-MBV-U1-2
SS-B	RTU-2 Power	1-4/c 1/0 AWG	S0602-SWBD-301	RTU-2
SS-B	UH-3 Power	1-4/c 12 AWG	S0602-SWBD-201	UH-3
SS-B	UH-1 Power	1-4/c 12 AWG	S0602-SWBD-301	UH-1
SS-B	UH-2 Power	1-4/c 12 AWG	S0602-SWBD-301	UH-2
SS-B	S0602-FIT-101 Power	1-3/c 12 AWG	S0603-PNL-001	S0602-FIT-101
SS-B	S0602-FIT-201 Power	1-3/c 12 AWG	S0603-PNL-001	S0602-FIT-201
SS-B	S0602-FIT-301 Power	1-3/c 12 AWG	S0603-PNL-001	S0602-FIT-301
SS-B	S0602-FIT-401 Power	1-3/c 12 AWG	S0603-PNL-001	S0602-FIT-401
SS-C	S0603-C-201 Power	1-4/c 6 AWG	S0602-SWBD-101	S0603-C-201 Motor Controller
SS-C	S0603-C-201 Control	1-5/c 12 AWG	S0603-CP-001	S0603-C-201 Motor Controller
SS-C	S0603-C-101 Control	1-5/c 12 AWG	S0603-CP-001	S0603-C-101 Motor Controller
SS-C	UH-1 Power	1-4/c 12 AWG	S0602-SWBD-101	UH-1
SS-C	S0603-C-101 Power	1-4/c 6 AWG	S0602-SWBD-101	S0603-C-101 Motor Controller
SS-D	S0603-XFMR-T-001 Power	1-4/c 6 AWG	S0602-SWBD-301	S0603-XFMR-T-001
SS-D	S0602-LCP-001	1-4/c 10 AWG	S0602-SWBD-301	S0602-LCP-001
SS-D	Roll-up Door 2 Motor Operator	1-4/c 12 AWG	S0602-SWBD-201	Rollup Door 2
SS-D	S0601-VCB-001 Control Power	1-3/c 12 AWG	S0603-PNL-001	S0601-VCB-001
SS-D	S0601-VCB-002 Control Power	1-3/c 12 AWG	S0603-PNL-001	S0601-VCB-002
SS-D	S0601-VCB-003 Control Power	1-3/c 12 AWG	S0603-PNL-001	S0601-VCB-003
SS-D	S0601-SWGR-001 Bus Protection UPS	1-3/c 12 AWG	S0603-PNL-001	S0601-SWGR-001
SS-D	S0601-SWGR-001 Cabinet Heater Power	1-3/c 10 AWG	S0603-PNL-001	S0601-SWGR-001
SS-D	Engine Generator Coolant Heater	1-3/c 12 AWG	S0603-PNL-001	Engine Generator
SS-D	Engine Generator Battery Charger	1-3/c 12 AWG	S0603-PNL-001	Engine Generator
SS-D	Engine Generator Battery Heater	1-3/c 12 AWG	S0603-PNL-001	Engine Generator
SS-D	Air Chamber Control Power	1-3/c 12 AWG	S0603-PNL-001	Air Chamber Control Panel
SS-D	S0601-SWGR-001 Lights & Receptacles	1-3/c 12 AWG	S0603-PNL-001	S0601-SWGR-001
SS-D	S0602-FIT-101 Power	1-3/c 12 AWG	S0603-PNL-001	S0602-FIT-101
SS-D	Impressed Current Cathodic Protection	1-3/c 12 AWG	S0603-PNL-001	Cathodic Protection Rectifier Cabinet
SS-D	S0602-FIT-201 Power	1-3/c 12 AWG	S0603-PNL-001	S0602-FIT-201
SS-D	S0602-FIT-301 Power	1-3/c 12 AWG	S0603-PNL-001	S0602-FIT-301
SS-D	S0602-FIT-401 Power	1-3/c 12 AWG	S0603-PNL-001	S0602-FIT-401

CABLE TRAY SCHEDULE SECTION E - STATION SERVICE POWER

CABLE TRAY SECTION	CONDUCTOR FUNCTION	CONDUCTOR SIZE	CABLE ORIGINATING POINT	CABLE TERMINATING POINT
SS-E	Air Chamber Control Power	1-3/c 12 AWG	S0603-PNL-001	S0603-CP-001
SS-E	S0603-C-201 Control	1-5/c 12 AWG	S0603-CP-001	S0603-C-201 Motor Controller
SS-E	S0603-C-101 Control	1-5/c 12 AWG	S0603-CP-001	S0603-C-101 Motor Controller
SS-E	Impressed Current Cathodic Protection	1-3/c 12 AWG	S0603-PNL-001	Cathodic Protection Rectifier Cabinet
SS-E	UH-3 Power	1-4/c 12 AWG	S0602-SWBD-201	UH-3
SS-E	UH-2 Power	1-4/c 12 AWG	S0602-SWBD-301	UH-2
SS-E1	S0603-C-101 Control	1-5/c 12 AWG	S0603-CP-001	S0603-C-101 Motor Controller
SS-E1	S0603-C-201 Control	1-5/c 12 AWG	S0603-CP-001	S0603-C-201 Motor Controller
SS-E1	Air Chamber Control Power	1-3/c 12 AWG	S0603-PNL-001	S0603-CP-001

RECLAMATION
Managing Water in the West

ALWAYS THINK **SAFETY**

U.S. DEPARTMENT OF THE INTERIOR
BUREAU OF RECLAMATION
NAVAJO GALLUP WATER SUPPLY PROJECT
NEW MEXICO
SAN JUAN LATERAL
PUMPING PLANT NOS. 4 AND 7

Darryl Liscomb
DESIGNED
Darryl Liscomb
DRAWN
Robert D. Cass
CHECKED
TECH. APPR. Lisa Gentry, P.E.
APPROVED Jay Boggess
Peer Reviewer - Manager, Electrical Design Group

DENVER, CO 2020-01-24

ELECTRICAL INSTALLATION

CABLE TRAY SCHEDULE - PUMPING PLANT NO. 7 POWER

1695-D-60577

CABLE TRAY SCHEDULE SECTIONS A-D - STATION INSTRUMENTATION

CABLE TRAY SECTION	CONDUCTOR FUNCTION	CONDUCTOR SIZE	CABLE ORIGINATING POINT	CABLE TERMINATING POINT
SI-A	S0601-SWGR-001 Modbus	2-RS-485	SCADA Cabinet	S0601-SWGR-001
SI-A	S0602-SWBD-001 Modbus	2-RS-485	SCADA Cabinet	S0602-SWBD-ATS-001
SI-A	North Gate Open Sensor	1-3/c 14 AWG	Security Cabinet	North Gate Open Sensor
SI-A	DFO Tank Level Signal	2-TSP 16 AWG	SCADA Cabinet	Engine Generator
SI-A	Camera 5 Signal	2-CAT 6	Communication Rack	Camera 5
SI-A	S0602-ZSC-501 Signal	1-3/c 14 AWG	Security Cabinet	Pump Room Door 101 Open Sensor
SI-A	S0602-MCE-001 Modbus	2-RS-485	SCADA Cabinet	S0602-MCE-001
SI-B	S0601-SWGR-001 Modbus	2-RS-485	SCADA Cabinet	S0601-SWGR-001
SI-B	S0602-MCE-001 Modbus	2-RS-485	SCADA Cabinet	S0602-MCE-001
SI-B	U3 & U4 Manifold Modbus	2-RS-485	SCADA Cabinet	S0602-MBV-U3-2
SI-B	U1 & U2 Manifold Modbus	2-RS-485	SCADA Cabinet	S0602-MBV-U1-2
SI-B	S0602-SWBD-001 Modbus	2-RS-485	SCADA Cabinet	S0602-SWBD-ATS-001
SI-B	Diesel Fuel Oil Tank Level Signal	2-TSP 16 AWG	SCADA Cabinet	Engine Generator
SI-B	S0602-PIT-502 Signal	2-TSP 16 AWG	SCADA Cabinet	S0602-PIT-502
SI-B	S0602-PS-402 Signal	1-3/c 14 AWG	SCADA Cabinet	S0602-PS-402
SI-B	S0602-PS-302 Signal	1-3/c 14 AWG	SCADA Cabinet	S0602-PS-302
SI-B	S0602-PS-202 Signal	1-3/c 14 AWG	SCADA Cabinet	S0602-PS-202
SI-B	S0602-PS-102 Signal	1-3/c 14 AWG	SCADA Cabinet	S0602-PS-102
SI-B	North Gate Open Sensor	1-3/c 14 AWG	Security Cabinet	North Gate Open Sensor
SI-B	Security Camera 5 Signal	2-CAT 6	Communication Rack	Security Camera 5
SI-B	Security Camera 2 Signal	2-CAT 6	Communication Rack	Security Camera 2
SI-C	S0603-C-101 Start	1-3/c 12 AWG	S0603-CP-001	S0603-C-101 Motor Controller
SI-C	S0603-C-201 Running Signal	1-3/c 14 AWG	S0603-CP-001	S0603-C-201 Motor Controller
SI-C	S0603-C-101 Running Signal	1-3/c 14 AWG	S0603-CP-001	S0603-C-101 Motor Controller
SI-C	S0603-C-201 Start	1-3/c 12 AWG	S0603-CP-001	S0603-C-201 Motor Controller
SI-C	Facility Communications	1-24 Strand Optical Fiber Cable	NTUA	Communication Rack
SI-D	U3 & U4 Manifold Modbus	2-RS-485	SCADA Cabinet	Various
SI-D	U1 & U2 Manifold Modbus	2-RS-485	SCADA Cabinet	Various
SI-D	S0601-SWGR-001 Modbus	2-RS-485	SCADA Cabinet	S0601-SWGR-001
SI-D	S0602-MCE-001 Modbus	2-RS-485	SCADA Cabinet	S0602-MCE-001
SI-D	S0602-SWBD-001 Modbus	2-RS-485	SCADA Cabinet	S0602-SWBD-ATS-001
SI-D	DFO Tank Level	2-TSP 16 AWG	SCADA Cabinet	Engine Generator
SI-D	S0602-PIT-502 Signal	2-TSP 16 AWG	SCADA Cabinet	S0602-PIT-502
SI-D	S0602-PS-402 Signal	1-3/c 14 AWG	SCADA Cabinet	S0602-PS-402
SI-D	S0602-PS-302 Signal	1-3/c 14 AWG	SCADA Cabinet	S0602-PS-302
SI-D	S0602-PS-202 Signal	1-3/c 14 AWG	SCADA Cabinet	S0602-PS-202
SI-D	S0602-PS-102 Signal	1-3/c 14 AWG	SCADA Cabinet	S0602-PS-102
SI-D	North Gate Open Sensor	1-3/c 14 AWG	Security Cabinet	North Gate Open Sensor
SI-D	South Gate Open Sensor	1-3/c 14 AWG	Security Cabinet	South Gate Open Sensor
SI-D	S0603-LS-201 & S0603-LS-202 Signal	1-5/c 14 AWG	SCADA Cabinet	S0603-LS-201 & S0603-LS-202
SI-D	S0603-LS-401 & S0603-LS-402 Signal	1-5/c 14 AWG	SCADA Cabinet	S0603-LS-401 & S0603-LS-402
SI-D	S0603-LS-301 & S0603-LS-302 Signal	1-5/c 14 AWG	SCADA Cabinet	S0603-LS-301 & S0603-LS-302
SI-D	S0603-LS-101 & S0603-LS-102 Signal	1-5/c 14 AWG	SCADA Cabinet	S0603-LS-101 & S0603-LS-102
SI-D	S0603-ZSC-201 & S0603-ZSO-201 Signal	1-5/c 14 AWG	SCADA Cabinet	S0603-ZSC-201 & S0603-ZSO-201
SI-D	S0603-ZSC-401 & S0603-ZSO-401 Signal	1-5/c 14 AWG	SCADA Cabinet	S0603-ZSC-401 & S0603-ZSO-401
SI-D	S0603-ZSC-301 & S0603-ZSO-301 Signal	1-5/c 14 AWG	SCADA Cabinet	S0603-ZSC-301 & S0603-ZSO-301
SI-D	S0603-ZSC-101 & S0603-ZSO-101 Signal	1-5/c 14 AWG	SCADA Cabinet	S0603-ZSC-101 & S0603-ZSO-101
SI-D	Security Camera 4 Signal	2-CAT 6	Communication Rack	Security Camera 4
SI-D	Security Camera 2 Signal	2-CAT 6	Communication Rack	Security Camera 2
SI-D	Security Camera 5 Signal	2-CAT 6	Communication Rack	Security Camera 5
SI-D	Security Camera 3 Signal	2-CAT 6	Communication Rack	Security Camera 3
SI-D	Security Camera 1 Signal	2-CAT 6	Communication Rack	Security Camera 1
SI-D	S0602-ZSC-503 Signal	1-3/c 14 AWG	Security Cabinet	Pump Room Door 103 Open Sensor
SI-D	S0602-ZSC-505 Signal	1-3/c 14 AWG	Security Cabinet	Pump Room Door 105 Open Sensor
SI-D	S0603-ZSC-502 Signal	1-3/c 14 AWG	Security Cabinet	Air Chamber Room Door 102 Open Sensor
SI-D	S0602-ZSC-501 Signal	1-3/c 14 AWG	Security Cabinet	Pump Room Door 101 Open Sensor
SI-D	Air Chamber Control Modbus	2-RS-485	S0603-CP-001	SCADA Cabinet
SI-D1	S0603-LS-201 & S0603-LS-202	1-5/c 14 AWG	SCADA Cabinet	S0603-LS-201 & S0603-LS-202
SI-D1	S0603-LS-401 & S0603-LS-402	1-5/c 14 AWG	SCADA Cabinet	S0603-LS-401 & S0603-LS-402
SI-D1	S0603-LS-301 & S0603-LS-302	1-5/c 14 AWG	SCADA Cabinet	S0603-LS-301 & S0603-LS-302
SI-D1	S0603-LS-101 & S0603-LS-102	1-5/c 14 AWG	SCADA Cabinet	S0603-LS-101 & S0603-LS-102
SI-D1	S0603-ZSC-201 & S0603-ZSO-201	1-5/c 14 AWG	SCADA Cabinet	S0603-ZSC-201 & S0603-ZSO-201
SI-D1	S0603-ZSC-401 & S0603-ZSO-401	1-5/c 14 AWG	SCADA Cabinet	S0603-ZSC-401 & S0603-ZSO-401
SI-D1	S0603-ZSC-301 & S0603-ZSO-301	1-5/c 14 AWG	SCADA Cabinet	S0603-ZSC-301 & S0603-ZSO-301
SI-D1	S0603-ZSC-101 & S0603-ZSO-101	1-5/c 14 AWG	SCADA Cabinet	S0603-ZSC-101 & S0603-ZSO-101
SI-D1	U1 & U2 Manifold Modbus	2-RS-485	SCADA Cabinet	Various
SI-D1	U3 & U4 Manifold Modbus	2-RS-485	SCADA Cabinet	Various
SI-D1	S0601-SWGR-001 Modbus	2-RS-485	SCADA Cabinet	S0601-SWGR-001
SI-D1	S0602-MCE-001 Modbus	2-RS-485	SCADA Cabinet	S0602-MCE-001
SI-D1	S0602-SWBD-001 Modbus	2-RS-485	SCADA Cabinet	S0602-SWBD-ATS-001
SI-D1	DFO Tank Level	2-TSP 16 AWG	SCADA Cabinet	Engine Generator
SI-D1	S0602-PS-402	1-3/c 14 AWG	SCADA Cabinet	S0602-PS-402
SI-D1	S0602-PS-302	1-3/c 14 AWG	SCADA Cabinet	S0602-PS-302
SI-D1	S0602-PS-202	1-3/c 14 AWG	SCADA Cabinet	S0602-PS-202
SI-D1	S0602-PS-102	1-3/c 14 AWG	SCADA Cabinet	S0602-PS-102
SI-D1	North Gate Open Sensor	1-3/c 14 AWG	Security Cabinet	North Gate Open Sensor
SI-D1	South Gate Open Sensor	1-3/c 14 AWG	Security Cabinet	South Gate Open Sensor
SI-D1	Security Camera 4 Signal	2-CAT 6	Communication Rack	Security Camera 4
SI-D1	Security Camera 2 Signal	2-CAT 6	Communication Rack	Security Camera 2
SI-D1	Security Camera 5 Signal	2-CAT 6	Communication Rack	Security Camera 5
SI-D1	Air Chamber Control Modbus	2-RS-485	S0603-CP-001	SCADA Cabinet

CABLE TRAY SCHEDULE SECTION E- STATION INSTRUMENTATION

CABLE TRAY SECTION	CONDUCTOR FUNCTION	CONDUCTOR SIZE	CABLE ORIGINATING POINT	CABLE TERMINATING POINT
SI-E	S0603-LS-101 & S0603-LS-102 Signal	1-5/c 14 AWG	SCADA Cabinet	S0603-LS-101 & S0603-LS-102
SI-E	S0603-LS-301 & S0603-LS-302 Signal	1-5/c 14 AWG	SCADA Cabinet	S0603-LS-301 & S0603-LS-302
SI-E	S0603-LS-401 & S0603-LS-402 Signal	1-5/c 14 AWG	SCADA Cabinet	S0603-LS-401 & S0603-LS-402
SI-E	S0603-LS-201 & S0603-LS-202 Signal	1-5/c 14 AWG	SCADA Cabinet	S0603-LS-201 & S0603-LS-202
SI-E	S0603-ZSC-101 & S0603-ZSO-101 Signal	1-5/c 14 AWG	SCADA Cabinet	S0603-ZSC-101 & S0603-ZSO-101
SI-E	S0603-ZSC-301 & S0603-ZSO-301 Signal	1-5/c 14 AWG	SCADA Cabinet	S0603-ZSC-301 & S0603-ZSO-301
SI-E	S0603-ZSC-401 & S0603-ZSO-401 Signal	1-5/c 14 AWG	SCADA Cabinet	S0603-ZSC-401 & S0603-ZSO-401
SI-E	S0603-ZSC-201 & S0603-ZSO-201 Signal	1-5/c 14 AWG	SCADA Cabinet	S0603-ZSC-201 & S0603-ZSO-201
SI-E	S0603-C-201 Start	1-3/c 12 AWG	S0603-CP-001	S0603-C-201 Motor Controller
SI-E	S0603-C-101 Start	1-3/c 12 AWG	S0603-CP-001	S0603-C-101 Motor Controller
SI-E	South Gate Open Sensor	1-3/c 14 AWG	Security Cabinet	South Gate Open Sensor
SI-E	S0603-C-101 Running	1-3/c 14 AWG	S0603-CP-001	S0603-C-101 Motor Controller
SI-E	S0603-C-201 Running	1-3/c 14 AWG	S0603-CP-001	S0603-C-201 Motor Controller
SI-E	Security Camera 4 Signal	2-CAT 6	Communication Rack	Security Camera 4
SI-E	S0603-ZSC-502 Signal	1-3/c 14 AWG	Security Cabinet	Air Chamber Room Door 102 Open Sensor
SI-E	Air Chamber Control Modbus	2-RS-485	S0603-CP-001	SCADA Cabinet
SI-E1	S0603-C-101 Signals	1-9/C 14 AWG	S0603-CP-001	S0603-C-101 Motor Controller
SI-E1	S0603-C-201 Signals	1-9/C 14 AWG	S0603-CP-001	S0603-C-201 Motor Controller
SI-E1	Air Chamber Control Modbus	2-RS-485	S0603-CP-001	SCADA Cabinet

RECLAMATION
Managing Water in the West

ALWAYS THINK **SAFETY**

U.S. DEPARTMENT OF THE INTERIOR
BUREAU OF RECLAMATION
NAVAJO GALLUP WATER SUPPLY PROJECT
NEW MEXICO

SAN JUAN LATERAL
PUMPING PLANT NOS. 4 AND 7

Darryl Liscomb
DESIGNED
Darryl Liscomb
DRAWN
Robert D. Cass
CHECKED
TECH. APPR. Lisa Gentry, P.E.
APPROVED Jay Boggess
Peer Reviewer - Manager, Electrical Design Group

DENVER, CO 2020-01-24

ELECTRICAL INSTALLATION

CABLE TRAY SCHEDULE - PUMPING PLANT NO. 7 INSTRUMENTATION

1695-D-60578

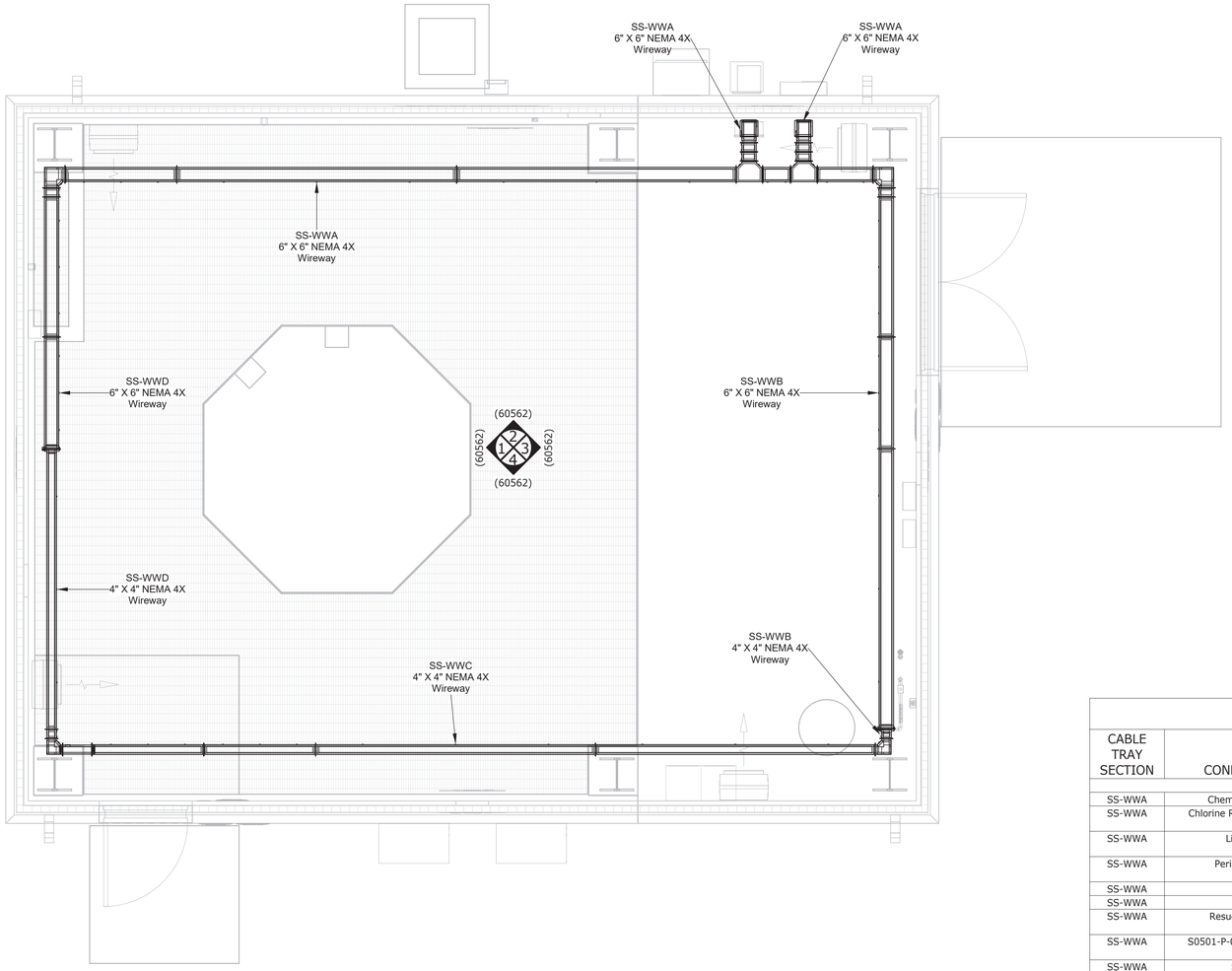

1 WIREWAY PLAN - POWER

Scale: 3/8" = 1'-0"

0 2' 4' 6'

GENERAL NOTES

1. All work to be in accordance with the latest version of NFPA 70, National Electric Code.
2. Wireway routings are typical.
3. Wireway section SS-WWx to be located approximately 10.5 feet AFF.
4. Wireway section SI-WWx to be located approximately 18 inches above the respective section SS-WWx.
5. Cable and conductors to be routed via conduit from equipment to the wireway.
6. Lighting and receptacle conductor quantity is for appriximation only. Determine actual required quantity based on supplied equipment and routing requirements.
7. Wireway support trapeze to be suspended from available roof support columns, beams and purlins using the appropriate hardware and following manufacturers requirements. Coordinate design and installation with the pre-engineered building manufacturer.

WIREWAY SCHEDULE - POWER

CABLE TRAY SECTION	CONDUCTOR FUNCTION	CONDUCTOR SIZE	CABLE ORIGINATING POINT	CABLE TERMINATING POINT
SS-WWA	Chemical Building Sump Pump	1-3/c 12 AWG	S0504-PNL-002	Chemical Building Sump Pump Controller
SS-WWA	Chlorine Residual Sample Return Pump	1-3/c 12 AWG	S0504-PNL-002	Chlorine Residual Sample Return Pump Controller
SS-WWA	Lighting & Receptacles	12-1/c 12 AWG Premise Wire	S0504-PNL-002	Lighting & Receptacles
SS-WWA	Peristaltic Pump Receptacle	3-1/c 12 AWG Premise Wire	S0504-PNL-002	Peristaltic Pump Receptacle
SS-WWA	PTAC-2	1-3/c 12 AWG	S0504-PNL-002	PTAC-2
SS-WWA	PTAC-3	1-3/c 12 AWG	S0504-PNL-002	PTAC-3
SS-WWA	Resudual Analyzer Receptacle	3-1/c 12 AWG Premise Wire	S0504-PNL-002	Resudual Analyzer Receptacle
SS-WWA	S0501-P-004 Emergency Shower Pump	1-4/c 12 AWG	S0504-PNL-001	S0501-P-004 Emergency Shower Pump Controller
SS-WWA	S0504-E-001 Power	3-1/c 2/0 AWG	S0504-PNL-001	S0504-E-001
SS-WWA	UH-4	1-4/c 12 AWG	S0504-PNL-001	UH-4
SS-WWA	UH-5	1-4/c 12 AWG	S0504-PNL-001	UH-5
SS-WWA	UH-6	1-4/c 12 AWG	S0504-PNL-001	UH-6
SS-WWA	VF-1	1-3/c 12 AWG	S0504-PNL-002	VF-1
SS-WWB	Chemical Building Sump Pump	1-3/c 12 AWG	S0504-PNL-002	Chemical Building Sump Pump
SS-WWB	Lighting & Receptacles	12-1/c 12 AWG Premise Wire	S0504-PNL-002	Lighting & Receptacles
SS-WWB	PTAC-2	1-3/c 12 AWG	S0504-PNL-002	PTAC-2
SS-WWB	PTAC-3	1-3/c 12 AWG	S0504-PNL-002	PTAC-3
SS-WWB	S0501-P-004 Emergency Shower Pump	1-4/c 12 AWG	S0504-PNL-002	S0501-P-004 Emergency Shower Pump Controller
SS-WWB	S0504-E-001 Power	3-1/c 2/0 AWG	S0504-PNL-001	S0504-E-001
SS-WWB	UH-6	1-4/c 12 AWG	S0504-PNL-001	UH-6
SS-WWB	VF-1	1-3/c 12 AWG	S0504-PNL-002	VF-1
SS-WWC	Lighting & Receptacles	12-1/c 12 AWG Premise Wire	S0504-PNL-002	Lighting & Receptacles
SS-WWC	PTAC-2	1-3/c 12 AWG	S0504-PNL-002	PTAC-2
SS-WWC	PTAC-3	1-3/c 12 AWG	S0504-PNL-002	PTAC-3
SS-WWC	UH-6	1-4/c 12 AWG	S0504-PNL-001	UH-6
SS-WWD	Chlorine Residual Sample Return Pump	1-3/c 12 AWG	S0504-PNL-002	Chlorine Residual Sample Return Pump Controller
SS-WWD	Lighting & Receptacles	12-1/c 12 AWG Premise Wire	S0504-PNL-002	Lighting & Receptacles
SS-WWD	Resudual Analyzer Receptacle	3-1/c 12 AWG Premise Wire	S0504-PNL-002	Resudual Analyzer Receptacle
SS-WWD	UH-5	1-4/c 12 AWG	S0504-PNL-001	UH-5

RECLAMATION
Managing Water in the West

ALWAYS THINK **SAFETY**

U.S. DEPARTMENT OF THE INTERIOR
BUREAU OF RECLAMATION
NAVAJO GALLUP WATER SUPPLY PROJECT
NEW MEXICO
SAN JUAN LATERAL
PUMPING PLANT NOS. 4 AND 7

Darryl Liscomb
DESIGNED
Darryl Liscomb
DRAWN
Robert D. Cass
CHECKED
TECH. APPR. Lisa Gentry, P.E.
APPROVED Jay Boggess
Peer Reviewer - Manager, Electrical Design Group

DENVER, CO 2020-01-24

ELECTRICAL INSTALLATION

WIREWAY PLAN AND SCHEDULE - CHEMICAL BUILDING POWER

1695-D-60579

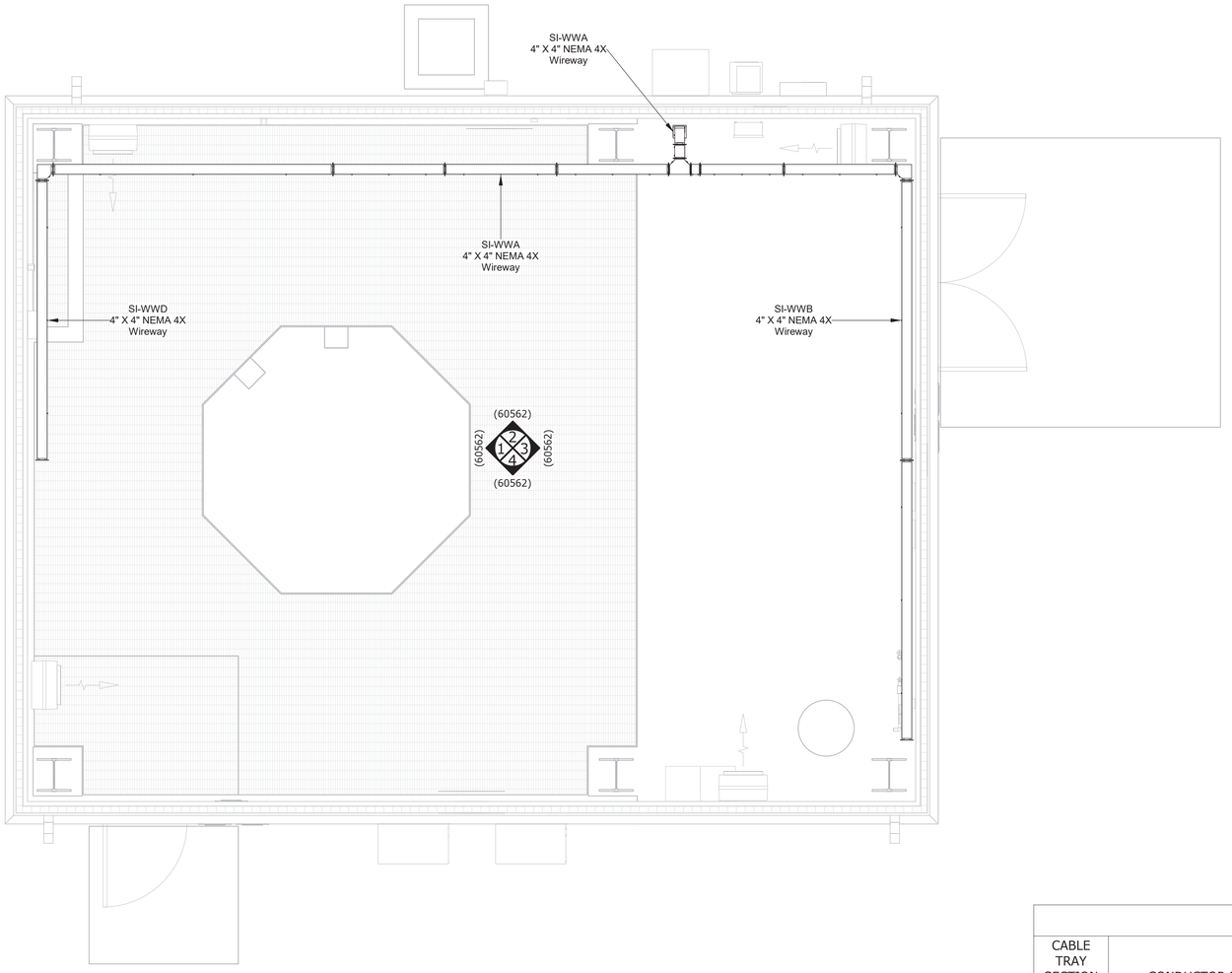

1 WIREWAY PLAN - INSTRUMENTATION

Scale: 3/8" = 1'-0"

0 2' 4' 6'

WIREWAY SCHEDULE - INSTRUMENTATION

CABLE TRAY SECTION	CONDUCTOR FUNCTION	CONDUCTOR SIZE	CABLE ORIGINATING POINT	CABLE TERMINATING POINT
SI-WWA	S0504-AIT-001 A/O Signals	4-TSP 16 AWG	Chemical Building SCADA Cabinet	S0504-AIT-001
SI-WWA	S0504-AIT-001 D/O Signal	1-3/c 14 AWG	S0504-AIT-001	S0504-P-001
SI-WWA	S0504-AIT-002 A/O Signals (Future)	4-TSP 16 AWG	Chemical Building SCADA Cabinet	S0504-AIT-002 (Future)
SI-WWA	S0504-AIT-002 D/O Signal (Future)	1-3/c 14 AWG	S0504-AIT-002	S0504-P-002 (Future)
SI-WWA	S0504-LSH-002 Shower Sump High Level Alarm	1-3/c 14 AWG	Chemical Building SCADA Cabinet	Shower Sump Pump Motor Controller
SI-WWA	S0504-LT-001 Signal	2-TSP 16 AWG	Chemical Building SCADA Cabinet	S0504-LT-001
SI-WWA	S0504-P-001 Signals	2-RS-485	Chemical Building SCADA Cabinet	S0504-P-001
SI-WWA	S0504-P-002 Signals (Future)	2-RS-485	Chemical Building SCADA Cabinet	154-P-002 (Future)
SI-WWA	S0504-YE-001 Signals	1-3/c 14 AWG	Chemical Building SCADA Cabinet	Chlorine Residual Sample Pump Motor Controller
SI-WWA	S0504-YE-004 E-Shower Pump Running Signal	1-3/c 14 AWG	Chemical Building SCADA Cabinet	Emergency Shower Pump Motor Controller
SI-WWA	S0504-ZSC-001 Signal	1-3/c 14 AWG	Chemical Building SCADA Cabinet	Chemical Building Door 001 Open Sensor
SI-WWA	S0504-ZSC-002 Signal	1-3/c 14 AWG	Chemical Building SCADA Cabinet	Chemical Building Door 002 Open Sensor
SI-WWA	Security Camera 6	2-CAT 6	Chemical Building SCADA Cabinet	Security Camera 6
SI-WWA	Security Camera 7	2-CAT 6	Chemical Building SCADA Cabinet	Security Camera 7
SI-WWB	S0504-LSH-002 Shower Sump High Level Alarm Signal	1-3/c 14 AWG	Chemical Building SCADA Cabinet	Shower Sump Pump Motor Controller
SI-WWB	S0504-PS-001 Signal	1-3/c 14 AWG	Emergency Shower Pump Motor Controller	S0504-PS-001
SI-WWB	S0504-YE-004 E-Shower Pump Running Signal	1-3/c 14 AWG	Chemical Building SCADA Cabinet	Emergency Shower Pump Motor Controller
SI-WWB	S0504-ZSC-001 Signal	1-3/c 14 AWG	Chemical Building SCADA Cabinet	Chemical Building Door 001 Open Sensor
SI-WWB	Security Camera 7	2-CAT 6	Chemical Building SCADA Cabinet	Security Camera 7
SI-WWD	S0504-AIT-001 A/O Signals	4-TSP 16 AWG	Chemical Building SCADA Cabinet	S0504-AIT-001
SI-WWD	S0504-AIT-001 D/O Signal	1-3/c 14 AWG	S0504-AIT-001	S0504-P-001
SI-WWD	S0504-AIT-002 A/O Signals (Future)	4-TSP 16 AWG	Chemical Building SCADA Cabinet	S0504-AIT-002 (Future)
SI-WWD	S0504-AIT-002 D/O Signal (Future)	1-3/c 14 AWG	S0504-AIT-002	S0504-P-002 (Future)
SI-WWD	S0504-LS-001 & S0504-LS-004	1-5/c 14 AWG	Chemical Building SCADA Cabinet	Chlorine Residual Sample Pump Motor Controller
SI-WWD	S0504-YE-001 Signals	1-3/c 14 AWG	Chemical Building SCADA Cabinet	Chlorine Residual Sample Pump Motor Controller
SI-WWD	S0504-ZSC-002 Signal	1-3/c 14 AWG	Chemical Building SCADA Cabinet	Chemical Building Door 002 Open Sensor
SI-WWD	Security Camera 6	2-CAT 6	Chemical Building SCADA Cabinet	Security Camera 6

RECLAMATION
Managing Water in the West

ALWAYS THINK **SAFETY**

U.S. DEPARTMENT OF THE INTERIOR
BUREAU OF RECLAMATION
NAVAJO GALLUP WATER SUPPLY PROJECT
NEW MEXICO
SAN JUAN LATERAL
PUMPING PLANT NOS. 4 AND 7

Darryl Liscomb
DESIGNED
Darryl Liscomb
DRAWN
Robert D. Cass
CHECKED
TECH. APPR. Lisa Gentry, P.E.
APPROVED Jay Boggess
Peer Reviewer - Manager, Electrical Design Group

DENVER, CO 2020-01-24

ELECTRICAL INSTALLATION

WIREWAY PLAN AND SCHEDULE - CHEMICAL BUILDING INSTRUMENTATION

1695-D-60580

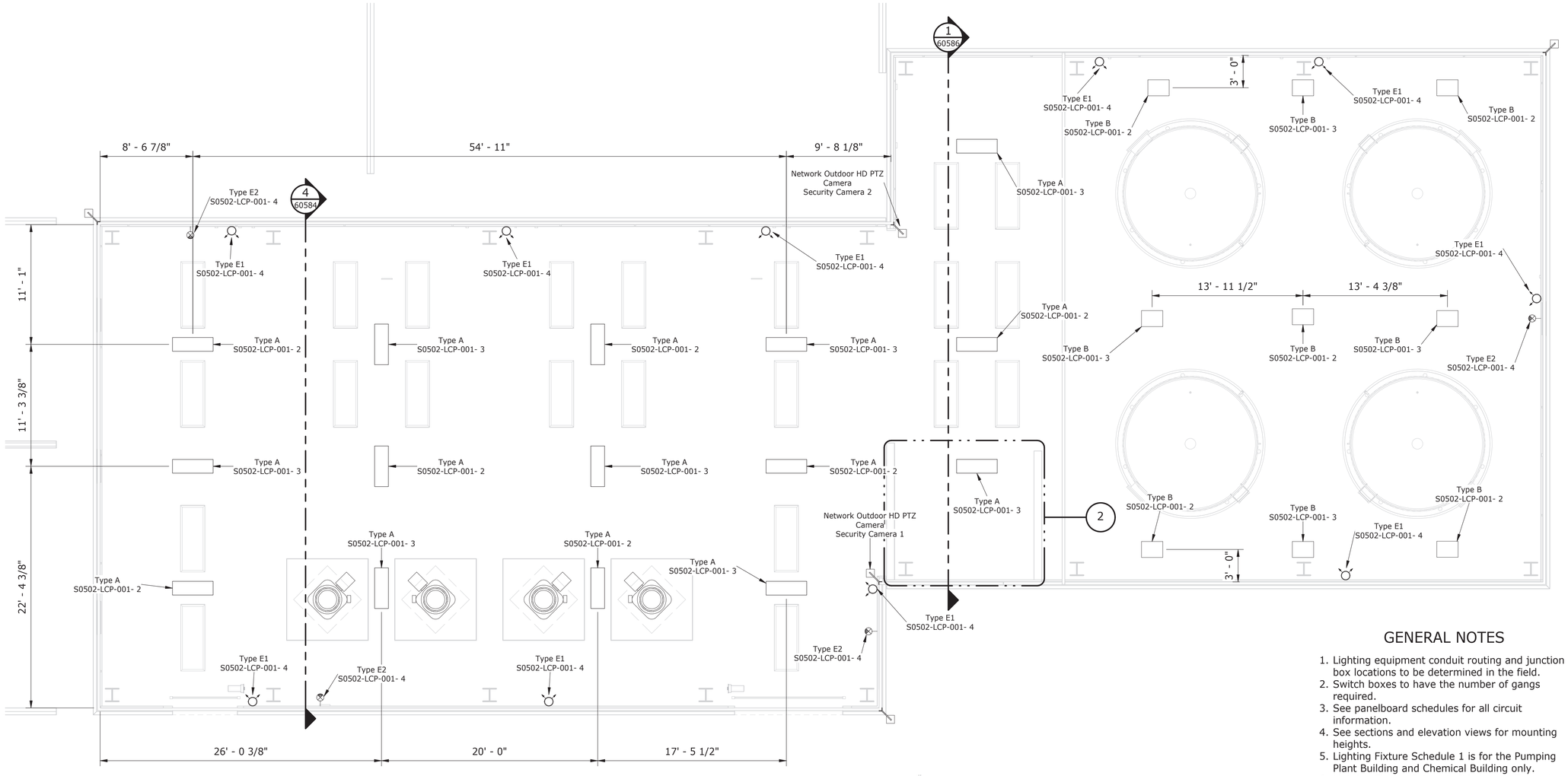

1 LIGHTING PLAN - PUMPING PLANT INTERIOR

Scale: 3/16" = 1'-0"

0 5' 10'

LIGHTING FIXTURE SCHEDULE 1

Manufacturer	Description	Catalog Number	Count	Type	Mounting
Cooper Lighting	Emergency Lighting w/ 2 LED Lamp Heads	10-REL36-LED42	15	Type E1	Wall Mount
Cooper Lighting	LED Single & Dual Head Wall Mount Up &-or Down	303-W1-LEDB1 EON LED	1	Type BB	Wall Mount
Philips Day-Brite - Philips CFI	HBX LED High Bay Luminaire	HBX13LL40-UNV-M-WT	9	Type B	Suspended
Acuity Brands Lighting	I-Beam IBL High Bay Luminaire	IBL 12L WD LP840	20	Type A	Suspended
Acuity Brands Lighting	Exit Sign	LQC-X-R-ELN	7	Type E2	Wall Mount
Acuity Brands Lighting	Square Basket LED Wraparound SBL4	SBL4-3000LM-80CRI-40K-NODIM-MVOLT	2	Type C	Surface
Cree	Edge LED Security Wall Pack	SEC-EDG-2S-WM-02-E-UL-BK-350	6	Type AA -LED Count 20	Wall Mount
Cree	Edge LED Security Wall Pack	SEC-EDG-2S-WM-06-E-UL-BK-350	14	Type AA -LED Count 60	Wall Mount

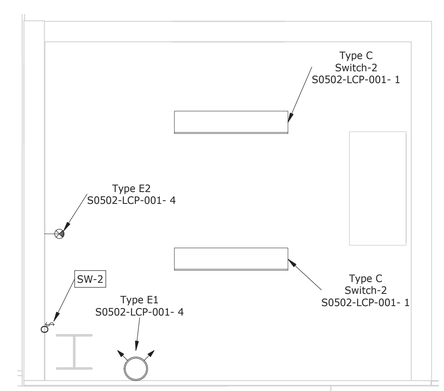

2 LIGHTING PLAN - CONTROL ROOM

Scale: 3/8" = 1'-0"

0 2' 4' 6'

GENERAL NOTES

1. Lighting equipment conduit routing and junction box locations to be determined in the field.
2. Switch boxes to have the number of gangs required.
3. See panelboard schedules for all circuit information.
4. See sections and elevation views for mounting heights.
5. Lighting Fixture Schedule 1 is for the Pumping Plant Building and Chemical Building only.
6. Lighting Fixture Schedule 2 is for the Turnout Building only.

LIGHTING - SYMBOLS LEGEND

- TYPE A - 48 1/8" X 15 7/8" LED High Bay Fixture
- TYPE B - 23 5/8" X 17 3/4" LED High Bay Fixture
- TYPE C - 48" X 8 5/8" LED Wraparound Fixture
- TYPE E1 - Dual Head Adjustable Lamp Emergency Lighting Fixture
- TYPE E2 - Exit Sign. Filled regions represent exit sign face. Filled arrow represents chevron.
- TYPE AA - LED Wall Pack Exterior Lighting Fixture.
- TYPE BB - LED Wall Mounted Exterior Lighting Fixture.
- $XX — Lighting Control Switch. XX:
  - 3 = 3 way
  - 4 = 4 way
  - O = Occupancy/vacancy operation
  - O3 = Occupancy/vacancy three way
  - DR = Door switch
  - M = Manual on/vacancy off
  - K = Programmable key pad with manual override.
  - LV = Low voltage control
- SW-x — Light Switch ID

RECLAMATION
Managing Water in the West

ALWAYS THINK **SAFETY**

U.S. DEPARTMENT OF THE INTERIOR
BUREAU OF RECLAMATION

NAVAJO GALLUP WATER SUPPLY PROJECT
NEW MEXICO

SAN JUAN LATERAL
PUMPING PLANT NOS. 4 AND 7

Darryl Liscomb
DESIGNED
Darryl Liscomb
DRAWN
Robert D. Cass
CHECKED
TECH. APPR. Lisa Gentry, P.E.
APPROVED Jay Boggess
Peer Reviewer - Manager, Electrical Design Group

DENVER, CO 2020-01-24

ELECTRICAL INSTALLATION

LIGHTING PLAN - PUMPING PLANT INTERIOR

1695-D-60581

RECLAMATION
Managing Water in the West

GENERAL NOTES

1. Lighting equipment conduit routing and junction box locations to be determined in the field.
2. Switch boxes to have the number of gangs required.
3. See panelboard schedules for all circuit information.
4. See sections and elevation views for mounting heights.
5. Lighting Fixture Schedule 1 is for the Pumping Plant Building and Chemical Building only.
6. Lighting Fixture Schedule 2 is for the Turnout Building only.

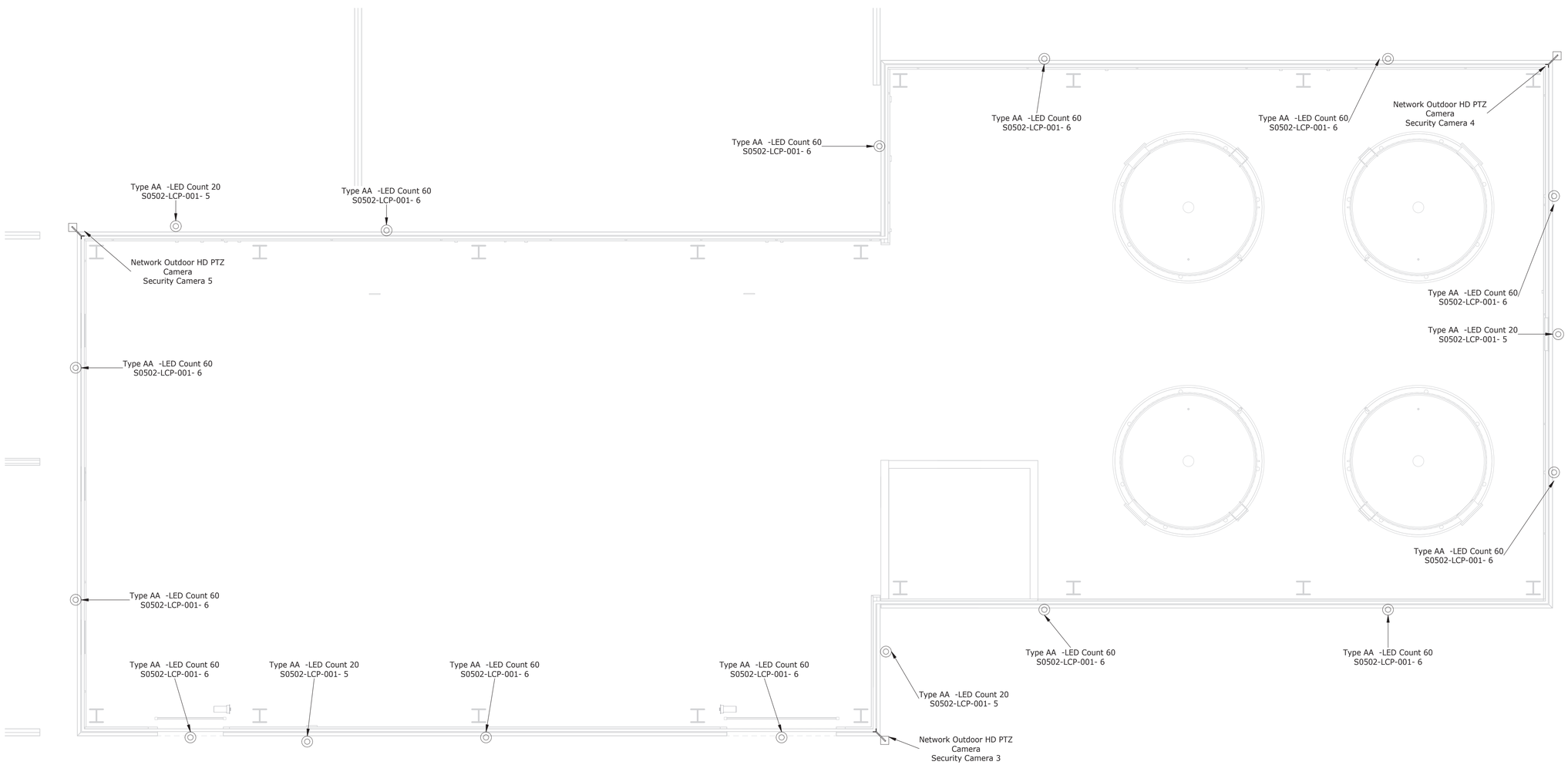

1 LIGHTING PLAN - PUMPING PLANT EXTERIOR
Scale: 3/16" = 1'-0"

0 5' 10'

ALWAYS THINK **SAFETY**

U.S. DEPARTMENT OF THE INTERIOR
BUREAU OF RECLAMATION
NAVAJO GALLUP WATER SUPPLY PROJECT
NEW MEXICO

SAN JUAN LATERAL
PUMPING PLANT NOS. 4 AND 7

DESIGNED	Darryl Liscomb
DRAWN	Darryl Liscomb
CHECKED	Robert D. Cass
TECH. APPR.	Lisa Gentry, P.E.
APPROVED	Jay Boggess Peer Reviewer - Manager, Electrical Design Group

DENVER, CO 2020-01-24

ELECTRICAL INSTALLATION

LIGHTING PLAN - PUMPING PLANT EXTERIOR

1695-D-60582

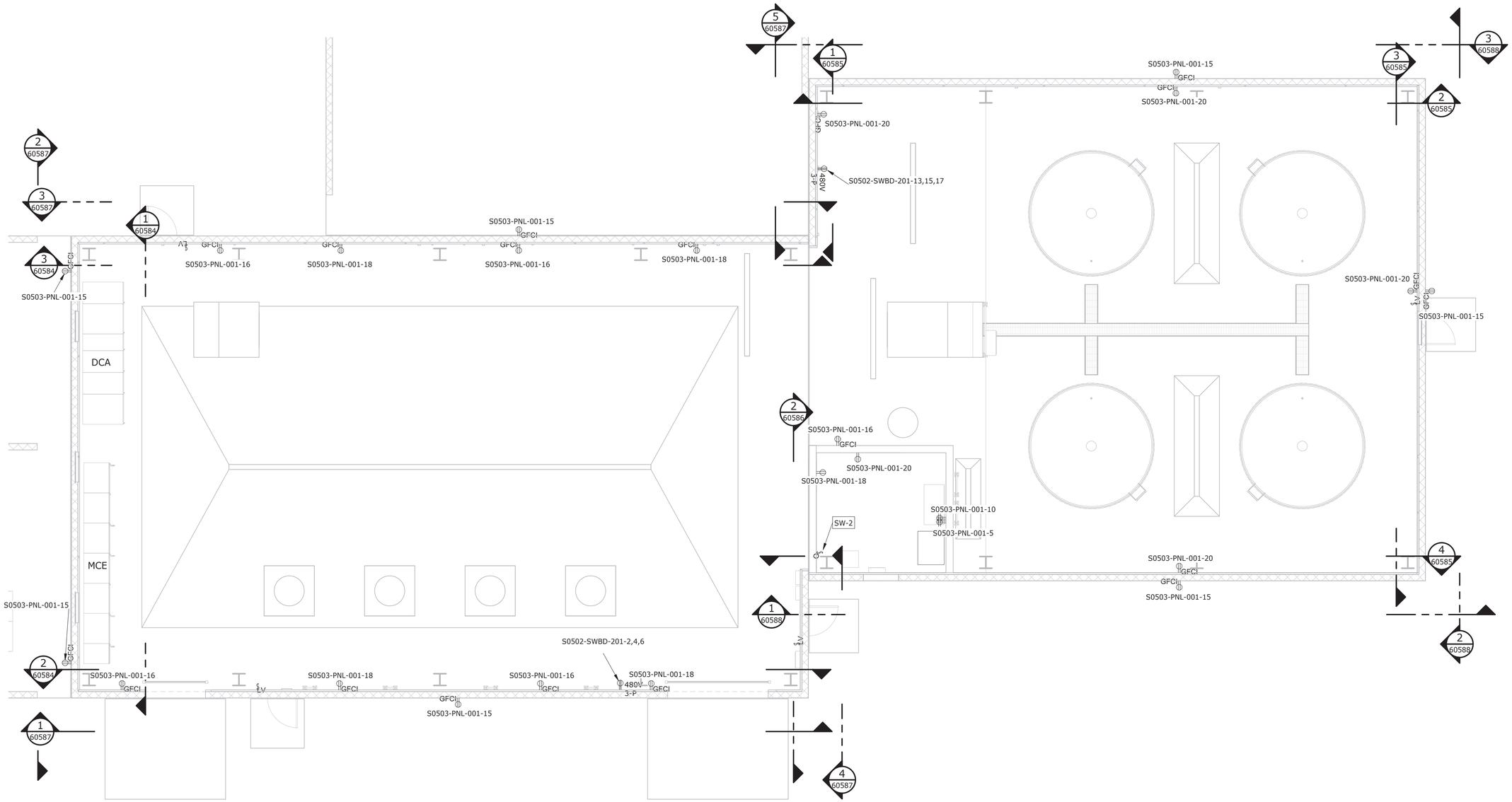

1 PLAN - PUMPING PLANT WIRING DEVICES

Scale: 3/16" = 1'-0"

0 5' 10'

RECLAMATION
Managing Water in the West

ALWAYS THINK **SAFETY**

U.S. DEPARTMENT OF THE INTERIOR
BUREAU OF RECLAMATION

NAVAJO GALLUP WATER SUPPLY PROJECT
NEW MEXICO

SAN JUAN LATERAL
PUMPING PLANT NOS. 4 AND 7

DESIGNED	Darryl Liscomb
DRAWN	Darryl Liscomb
CHECKED	Robert D. Cass
TECH. APPR.	Lisa Gentry, P.E.
APPROVED	Jay Boggess Peer Reviewer - Manager, Electrical Design Group
DENVER, CO	2020-01-24

ELECTRICAL INSTALLATION

WIRING DEVICE PLAN - PUMPING PLANT

1695-D-60583

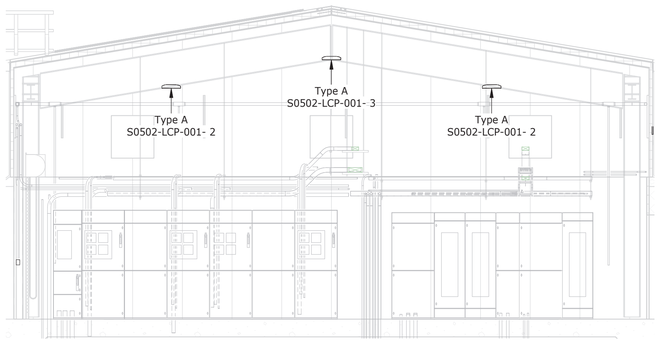

1 60583 LIGHTING SECTION - PUMP ROOM INTERIOR
Scale: 3/16" = 1'-0"

0 5' 10'

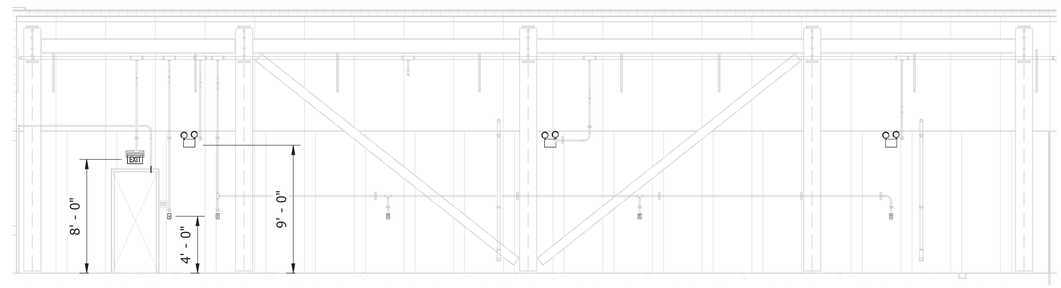

3 60583 LIGHTING SECTION - PUMP ROOM INTERIOR
Scale: 3/16" = 1'-0"

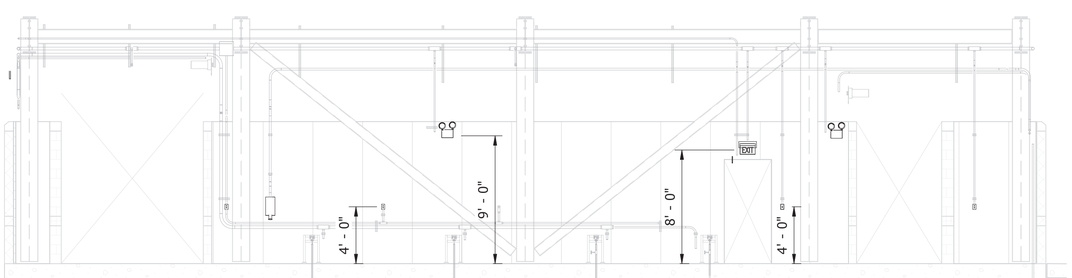

2 60583 LIGHTING SECTION - PUMP ROOM INTERIOR
Scale: 3/16" = 1'-0"

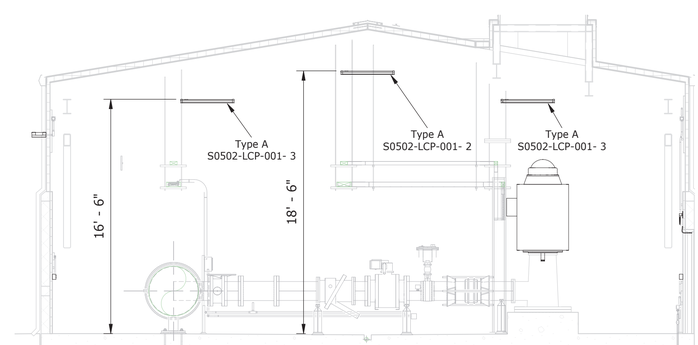

4 60581 LIGHTING SECTION - PUMP ROOM INTERIOR
Scale: 3/16" = 1'-0"

RECLAMATION
Managing Water in the West

ALWAYS THINK **SAFETY**

U.S. DEPARTMENT OF THE INTERIOR
BUREAU OF RECLAMATION
NAVAJO GALLUP WATER SUPPLY PROJECT
NEW MEXICO

SAN JUAN LATERAL
PUMPING PLANT NOS. 4 AND 7

Darryl Liscomb
DESIGNED
Darryl Liscomb
DRAWN
Robert D. Cass
CHECKED
TECH. APPR. Lisa Gentry, P.E.
APPROVED Jay Boggess
Peer Reviewer - Manager, Electrical Design Group

DENVER, CO 2020-01-24

ELECTRICAL INSTALLATION

LIGHTING SECTIONS - PUMPING PLANT INTERIOR LIGHTING AND WIRING DEVICES

1695-D-60584

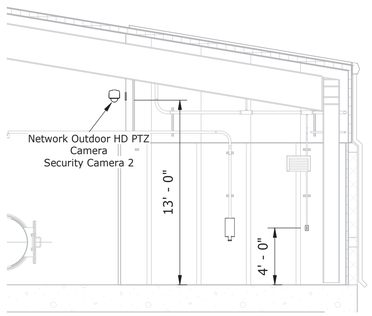

1 60583 LIGHTING SECTION - AIR CHAMBER ROOM INTERIOR
Scale: 3/16" = 1'-0"

0 5' 10'

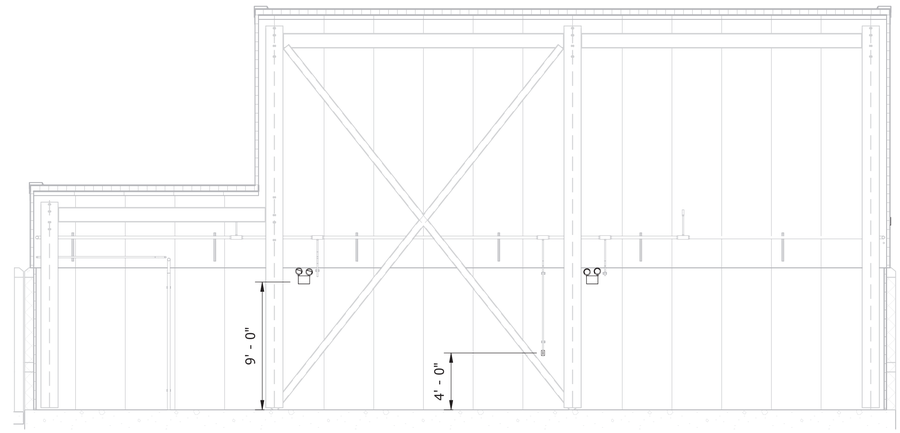

2 60583 LIGHTING SECTION - AIR CHAMBER ROOM INTERIOR
Scale: 3/16" = 1'-0"

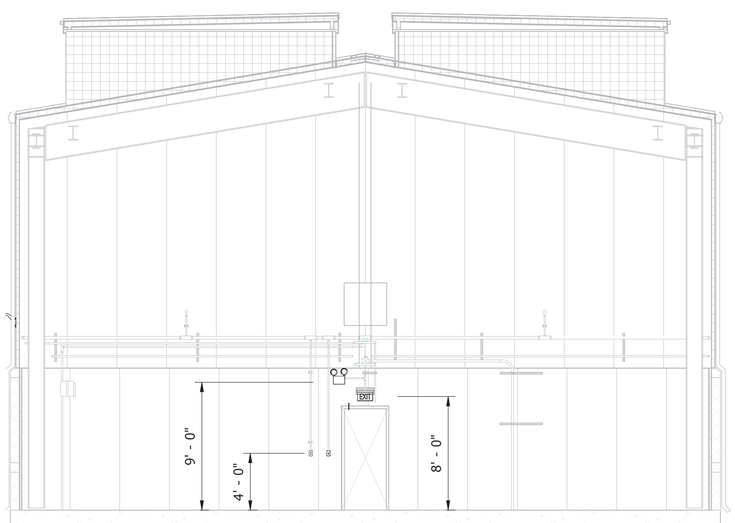

3 60583 LIGHTING SECTION - AIR CHAMBER ROOM INTERIOR
Scale: 3/16" = 1'-0"

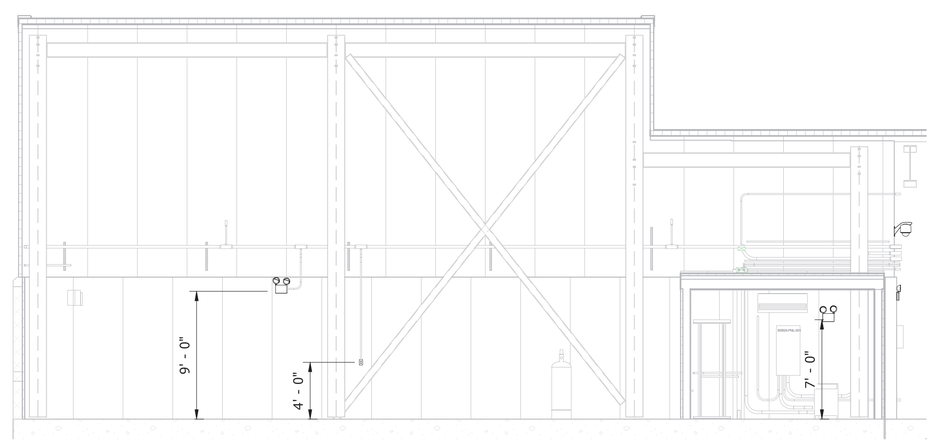

4 60583 LIGHTING SECTION - AIR CHAMBER ROOM INTERIOR
Scale: 3/16" = 1'-0"

RECLAMATION
Managing Water in the West

ALWAYS THINK **SAFETY**

U.S. DEPARTMENT OF THE INTERIOR
BUREAU OF RECLAMATION
NAVAJO GALLUP WATER SUPPLY PROJECT
NEW MEXICO
SAN JUAN LATERAL
PUMPING PLANT NOS. 4 AND 7

Darryl Liscomb
DESIGNED
Darryl Liscomb
DRAWN
Robert D. Cass
CHECKED
TECH. APPR. Lisa Gentry, P.E.
APPROVED Jay Boggess
Peer Reviewer - Manager, Electrical Design Group

DENVER, CO 2020-01-24

ELECTRICAL INSTALLATION

LIGHTING SECTIONS - PUMPING PLANT INTERIOR LIGHTING AND WIRING DEVICES

1695-D-60585

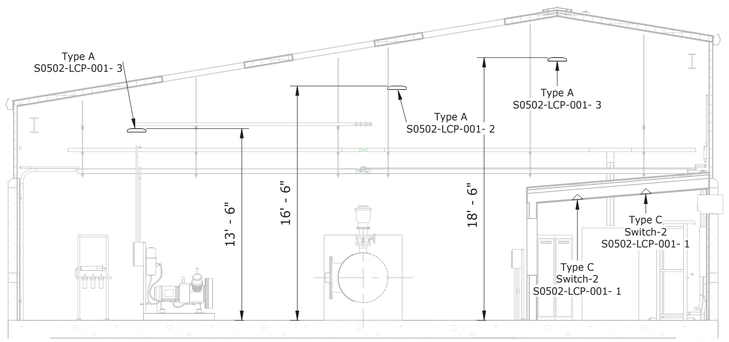

1 60581 LIGHTING SECTION - AIR CHAMBER ROOM INTERIOR

Scale: 3/16" = 1'-0"

0 5' 10'

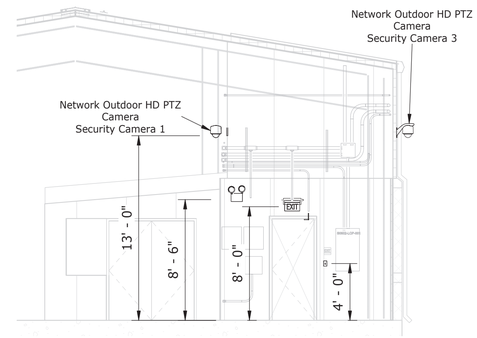

2 60583 LIGHTING SECTION - PUMP ROOM INTERIOR

Scale: 3/16" = 1'-0"

RECLAMATION
Managing Water in the West

ALWAYS THINK **SAFETY**

U.S. DEPARTMENT OF THE INTERIOR
BUREAU OF RECLAMATION

NAVAJO GALLUP WATER SUPPLY PROJECT
NEW MEXICO

SAN JUAN LATERAL
PUMPING PLANT NOS. 4 AND 7

Darryl Liscomb
DESIGNED
Darryl Liscomb
DRAWN
Robert D. Cass
CHECKED
TECH. APPR. Lisa Gentry, P.E.
APPROVED Jay Boggess
Peer Reviewer - Manager, Electrical Design Group

DENVER, CO 2020-01-24

ELECTRICAL INSTALLATION

LIGHTING SECTIONS - PUMPING PLANT INTERIOR

1695-D-60586

RECLAMATION
Managing Water in the West

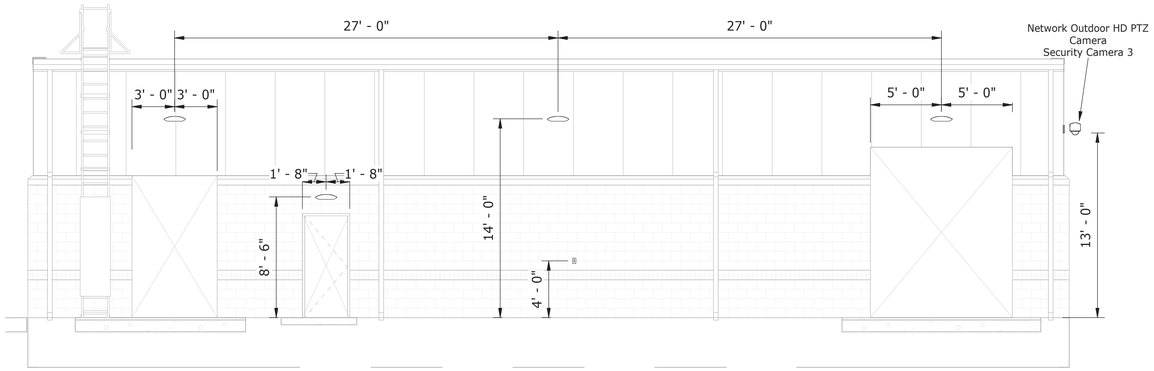

1 60583 LIGHTING SECTION - D-LINE WALL
Scale: 3/16" = 1'-0"

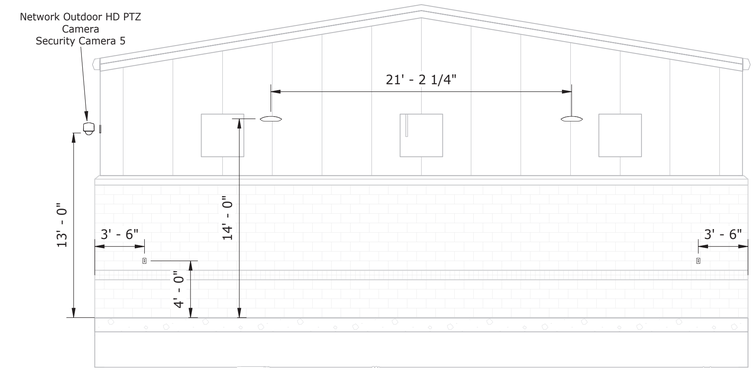

2 60583 LIGHTING SECTION - 1-LINE WALL
Scale: 3/16" = 1'-0"

0 5' 10'

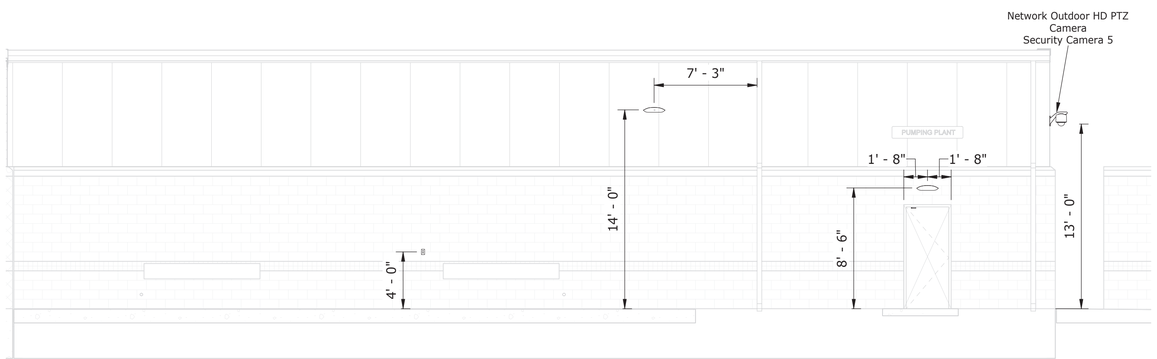

3 60583 LIGHTING SECTION - B-LINE WALL
Scale: 3/16" = 1'-0"

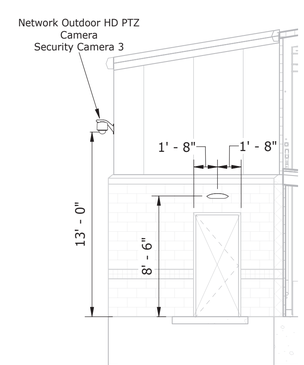

4 60583 LIGHTING SECTION - 7-LINE WALL WEST
Scale: 3/16" = 1'-0"

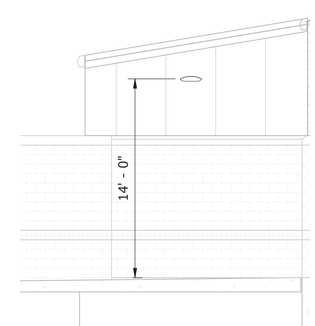

5 60583 LIGHTING SECTION - 7-LINE WALL EAST
Scale: 3/16" = 1'-0"

ALWAYS THINK **SAFETY**

U.S. DEPARTMENT OF THE INTERIOR
BUREAU OF RECLAMATION
NAVAJO GALLUP WATER SUPPLY PROJECT
NEW MEXICO

SAN JUAN LATERAL
PUMPING PLANT NOS. 4 AND 7

Darryl Liscomb
DESIGNED
Darryl Liscomb
DRAWN
Robert D. Cass
CHECKED
TECH. APPR. Lisa Gentry, P.E.
APPROVED Jay Boggess
Peer Reviewer - Manager, Electrical Design Group

DENVER, CO 2020-01-24

ELECTRICAL INSTALLATION

LIGHTING SECTIONS - PUMPING PLANT EXTERIOR

1695-D-60587

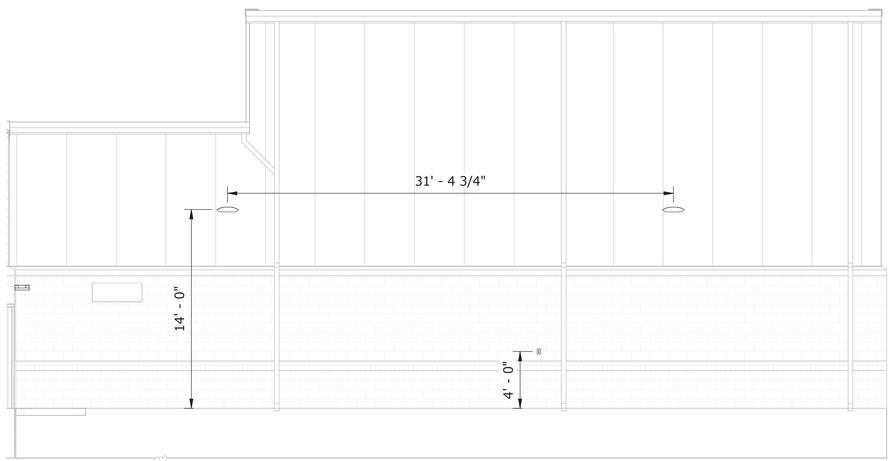

1 60583 LIGHTING SECTION - C-LINE WALL
Scale: 3/16" = 1'-0"

0 5' 10'

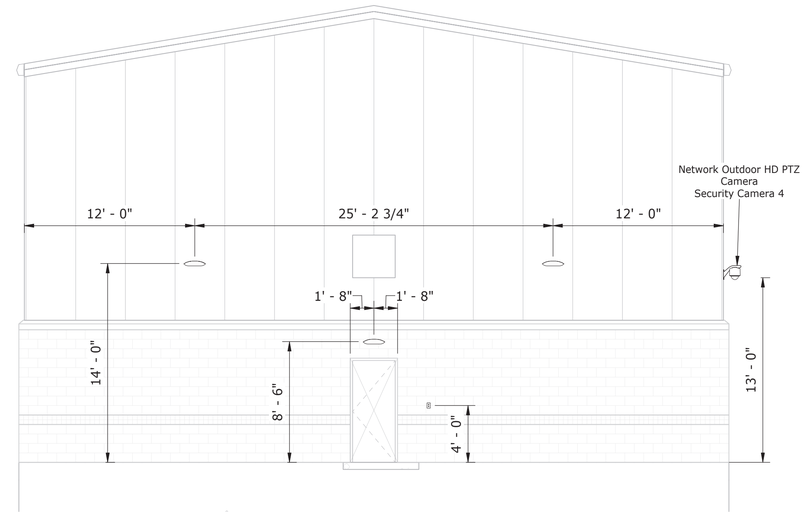

2 60583 LIGHTING SECTION - 13-LINE WALL
Scale: 3/16" = 1'-0"

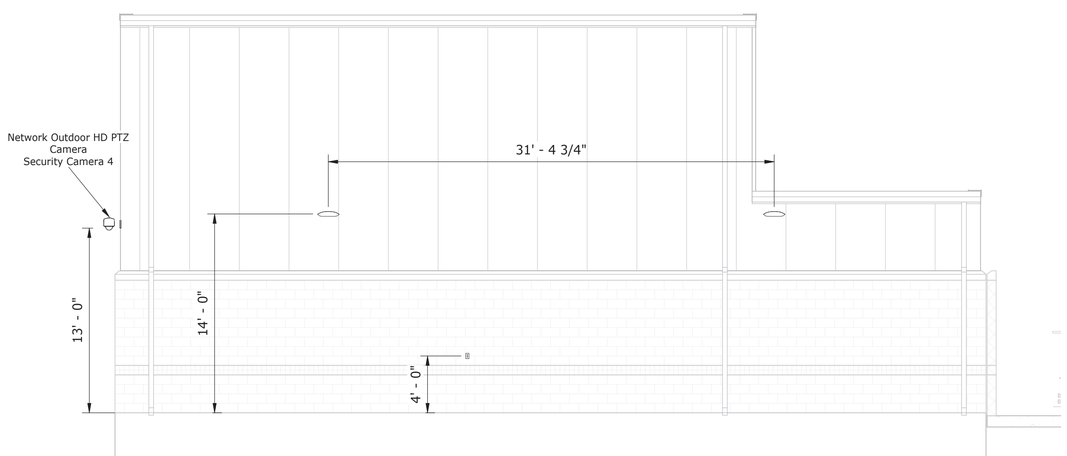

3 60583 LIGHTING SECTION - A-LINE WALL
Scale: 3/16" = 1'-0"

RECLAMATION
Managing Water in the West

ALWAYS THINK **SAFETY**

U.S. DEPARTMENT OF THE INTERIOR
BUREAU OF RECLAMATION
NAVAJO GALLUP WATER SUPPLY PROJECT
NEW MEXICO
SAN JUAN LATERAL
PUMPING PLANT NOS. 4 AND 7

Darryl Liscomb
DESIGNED
Darryl Liscomb
DRAWN
Robert D. Cass
CHECKED
TECH. APPR. Lisa Gentry, P.E.
APPROVED Jay Boggess
Peer Reviewer - Manager, Electrical Design Group

DENVER, CO 2020-01-24

ELECTRICAL INSTALLATION

LIGHTING SECTIONS - PUMPING PLANT EXTERIOR

1695-D-60588

RECLAMATION
Managing Water in the West

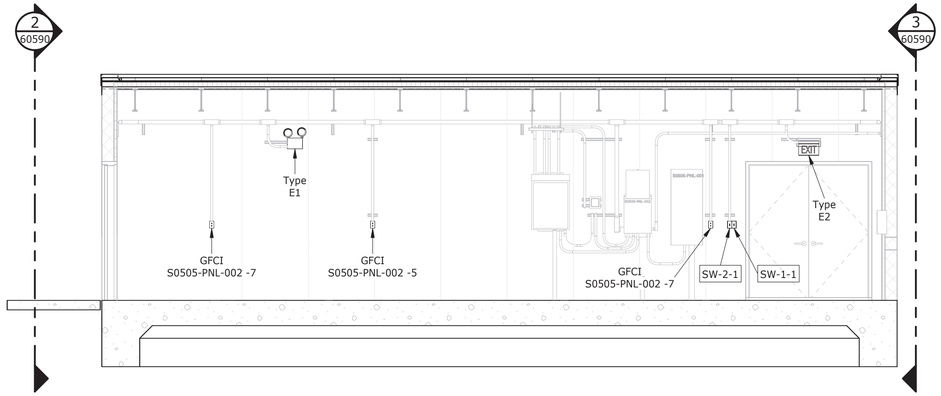

2 LIGHTING ELEVATION
60589 Scale: 1/4" = 1'-0"

GENERAL NOTES

1. Lighting equipment conduit routing and junction box locations to be determined in the field.
2. Switch boxes to have the number of gangs required.
3. Interior lighting to be controlled using light switches 2-1, 2-2, and 2-3.
4. Exterior lighting to be controlled using light switches 1-1, 1-2, and 1-3.
5. See Lighting Fixture Schedule 2 for fixture characteristics.
6. See panelboard schedules for all circuit information.
7. Receptacles and switches to be mounted at 4' AFF.

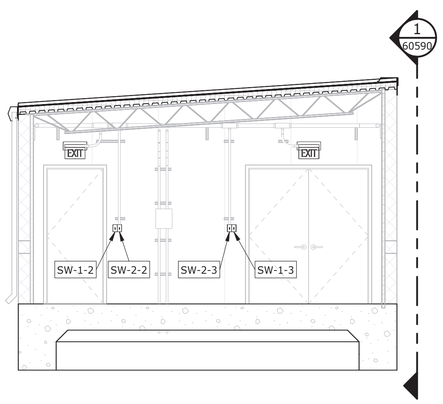

3 LIGHTING ELEVATION
60589 Scale: 1/4" = 1'-0"

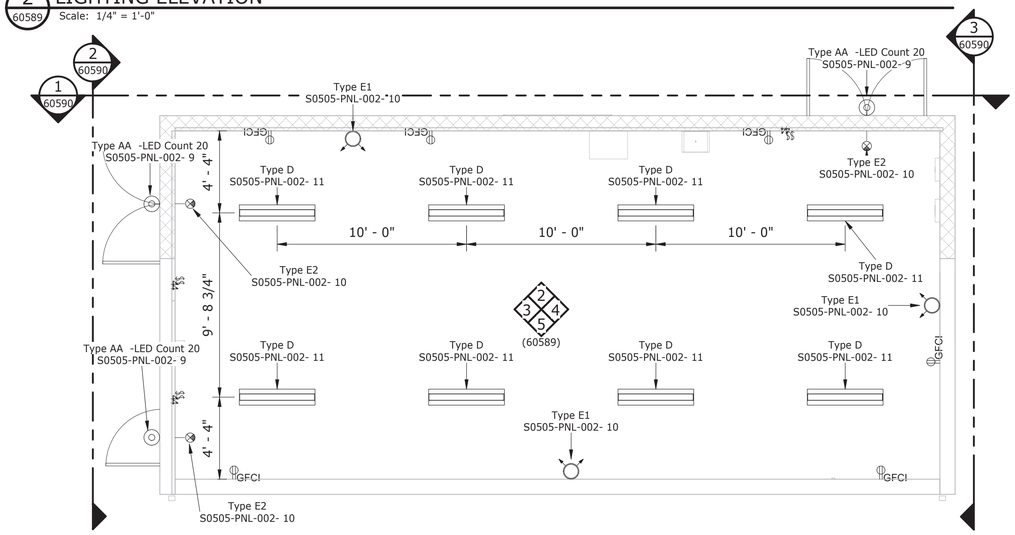

1 LIGHTING PLAN
Scale: 1/4" = 1'-0"

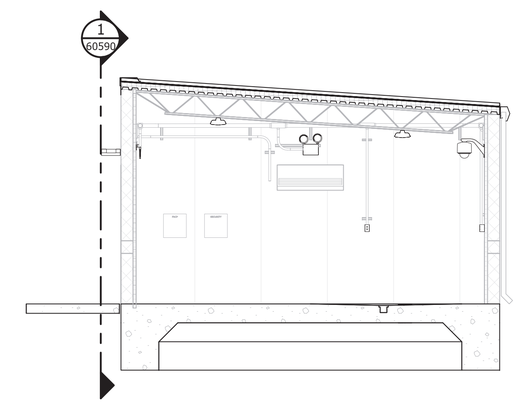

4 LIGHTING ELEVATION
60589 Scale: 1/4" = 1'-0"

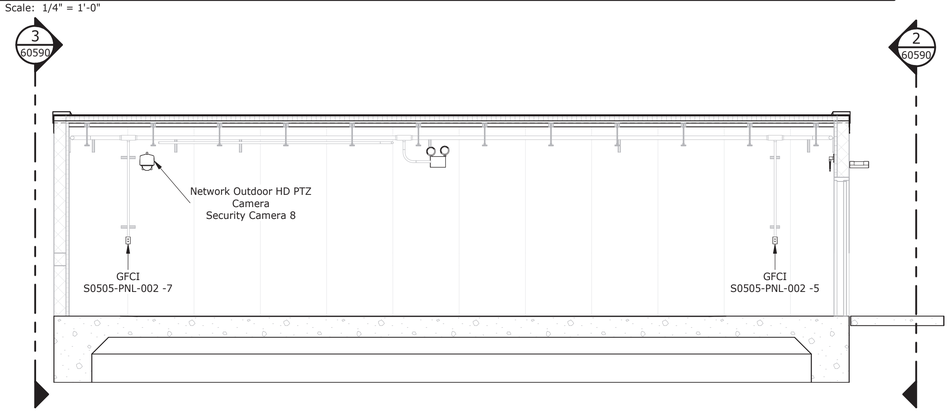

5 LIGHTING ELEVATION
60589 Scale: 1/4" = 1'-0"

LIGHTING - SYMBOLS LEGEND

- Type D - 48-inch general lighting fixture.
- Type E1 - Emergency lighting fixture.
- Type E2 - Exit sign. Filled regions represent exit sign face. Filled arrow represents chevron.
- Type AA - Entrance wall mount lighting fixture
- $XX — Lighting Control Switch. XX:
  - 3 = 3 way
  - 4 = 4 way
  - O = Occupancy/vacancy operation
  - O3 = Occupancy/vacancy three way
  - DR = Door switch
  - M = Manual on/vacancy off
  - K = Programmable key pad with manual override.
- SW-x — Light Switch ID

ALWAYS THINK **SAFETY**

U.S. DEPARTMENT OF THE INTERIOR
BUREAU OF RECLAMATION

NAVAJO GALLUP WATER SUPPLY PROJECT
NEW MEXICO

SAN JUAN LATERAL
PUMPING PLANT NOS. 4 AND 7

D. Liscomb
DESIGNED
D. Liscomb
DRAWN
R. Cass
CHECKED
TECH. APPR. L. Gentry P.E.
APPROVED Jay Boggess
Peer Reviewer - Manager, Electrical Design Group

DENVER, CO 2020-01-24

ELECTRICAL INSTALLATION

TURNOUT BUILDING LIGHTING - PLAN AND ELEVATIONS

1695-D-60589

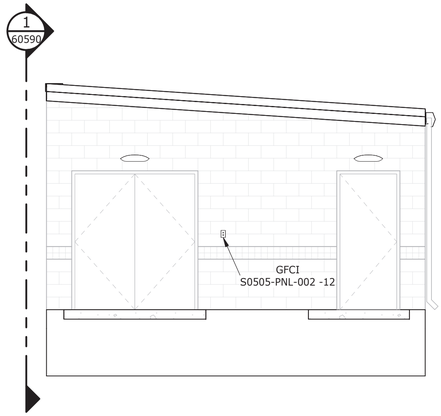

2 60589 LIGHTING SECTION
Scale: 1/4" = 1'-0"

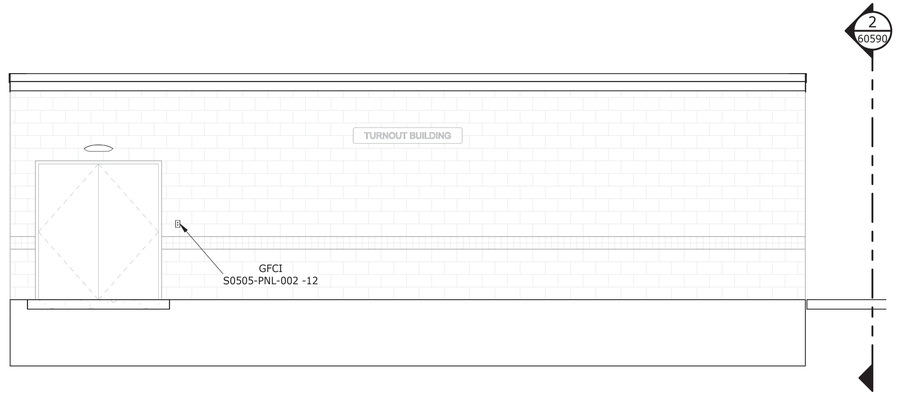

1 60589 LIGHTING SECTION
Scale: 1/4" = 1'-0"

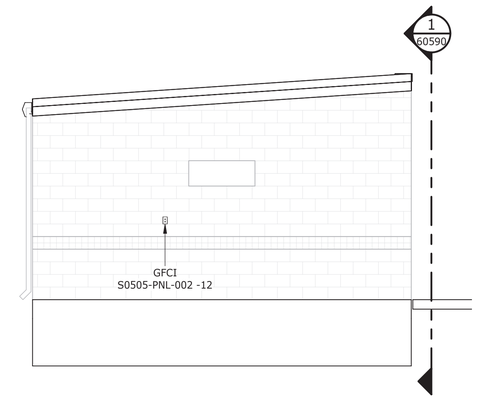

3 60589 LIGHTING SECTION
Scale: 1/4" = 1'-0"

LIGHTING FIXTURE SCHEDULE 2

Manufacturer	Description	Catalog Number	Count	Type	Mounting	Height AFF
Cooper Lighting	Emergency Lighting w/ 2 LED Lamp Heads	10-REL36-LED42	3	Type E1	Wall Mount	8' - 0"
Acuity Brands Lighting	Exit Sign	LQC-X-R-ELN	3	Type E2	Wall Mount	7' - 8"
Cree	Security Wall Pack	SEC-EDG-4MB-WM-02-E-UL-BZ-350-40K	3	Type AA -LED Count 20	Wall Mount	8' - 0"
Acuity Brands Lighting	UFIT low bay ultra efficient LED lighting	UFIT L48 4000LM SEF MVOLT EZ1 40K 80CRI WH	4	Type D	Suspended	8' - 10"
Acuity Brands Lighting	UFIT low bay ultra efficient LED lighting	UFIT L48 4000LM SEF MVOLT EZ1 40K 80CRI WH	4	Type D	Suspended	9' - 6"

RECLAMATION
Managing Water in the West

ALWAYS THINK **SAFETY**

U.S. DEPARTMENT OF THE INTERIOR
BUREAU OF RECLAMATION
NAVAJO GALLUP WATER SUPPLY PROJECT
NEW MEXICO
SAN JUAN LATERAL
PUMPING PLANT NOS. 4 AND 7

D. Liscomb
DESIGNED
D. Liscomb
DRAWN
R. Cass
CHECKED
TECH. APPR. L. Gentry P.E.
APPROVED Jay Boggess
Peer Reviewer - Manager, Electrical Design Group

DENVER, CO 2020-01-24

ELECTRICAL INSTALLATION

TURNOUT BUILDING LIGHTING - SECTIONS AND SCHEDULE

1695-D-60590

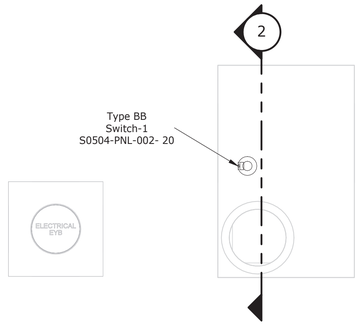

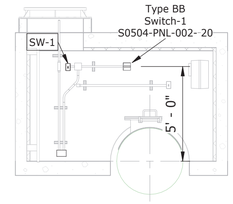

2 LIGHTING SECTION
Scale: 1/4" = 1'-0"

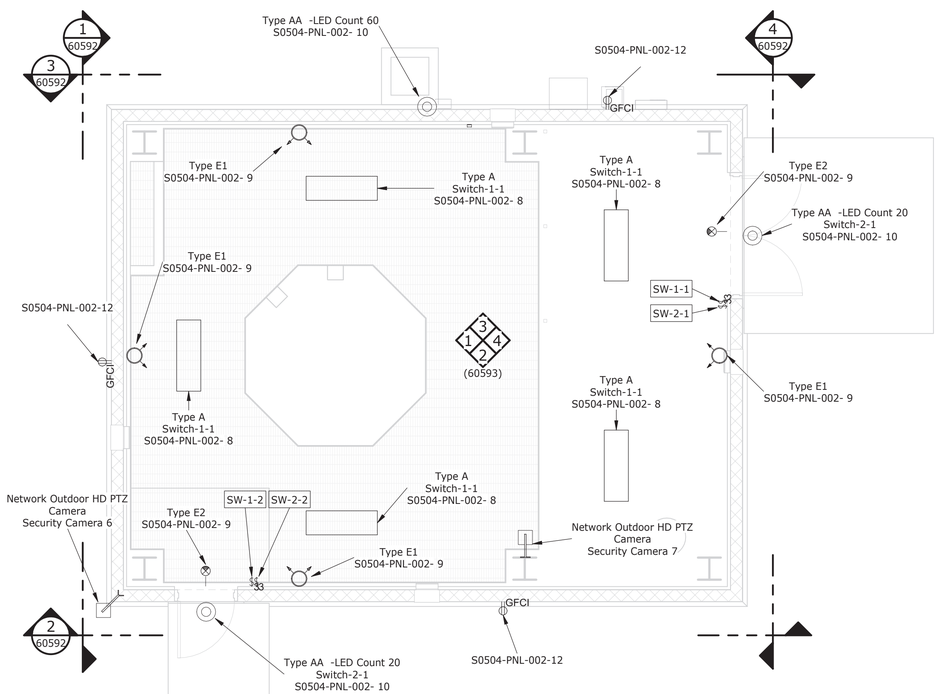

1 CHEMICAL BUILDING LIGHTING PLAN
Scale: 1/4" = 1'-0"

0 2' 4' 8'

RECLAMATION
Managing Water in the West

ALWAYS THINK **SAFETY**

U.S. DEPARTMENT OF THE INTERIOR
BUREAU OF RECLAMATION

NAVAJO GALLUP WATER SUPPLY PROJECT
NEW MEXICO

SAN JUAN LATERAL
PUMPING PLANT NOS. 4 AND 7

Darryl Liscomb DESIGNED	
Darryl Liscomb DRAWN	
Robert D. Cass CHECKED	
TECH. APPR.	Lisa Gentry, P.E.
APPROVED	Jay Boggess Peer Reviewer - Manager, Electrical Design Group

DENVER, CO 2020-01-24

ELECTRICAL INSTALLATION

LIGHTING AND WIRING DEVICE PLAN - PUMPING PLANT NO. 4 CHEMICAL BUILDING

1695-D-60591

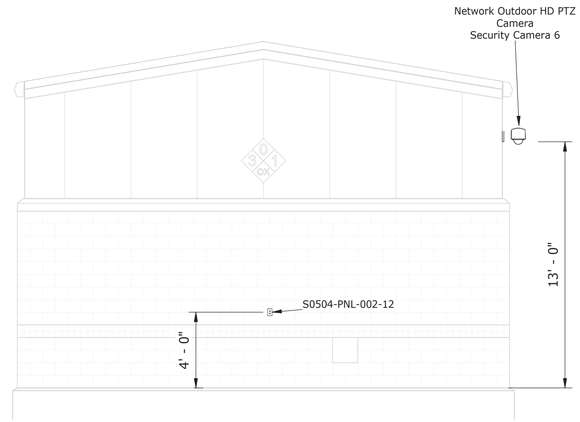

1 60591 LIGHTING SECTION
Scale: 1/4" = 1'-0"

0 2' 4' 8'

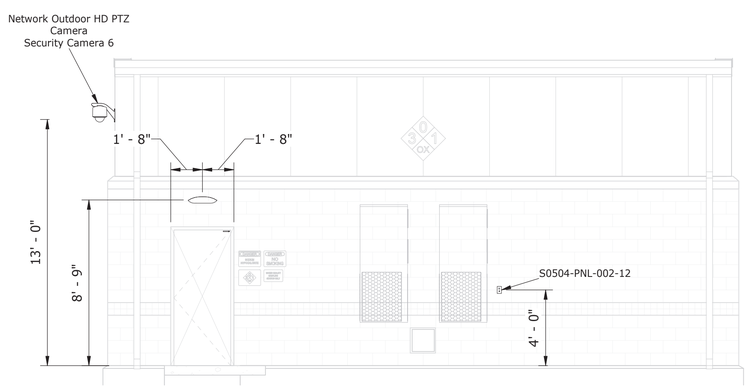

2 60591 LIGHTING SECTION
Scale: 1/4" = 1'-0"

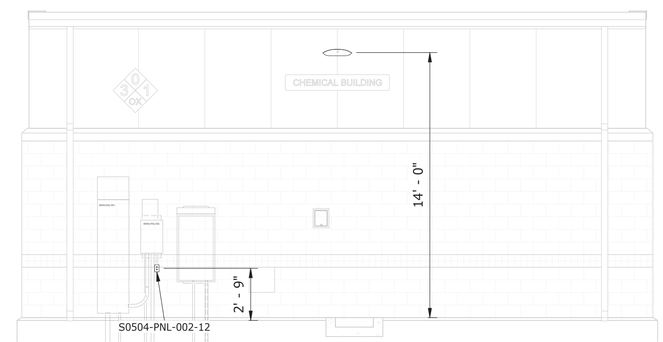

3 60591 LIGHTING SECTION
Scale: 1/4" = 1'-0"

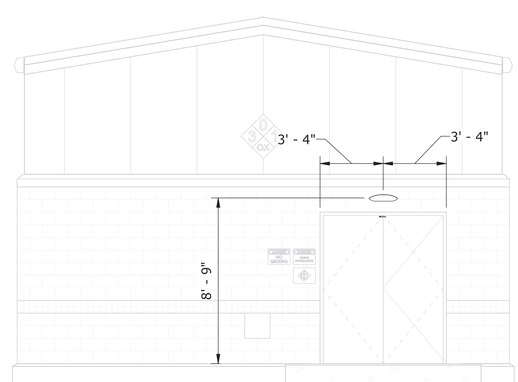

4 60591 LIGHTING SECTION
Scale: 1/4" = 1'-0"

RECLAMATION
Managing Water in the West

ALWAYS THINK **SAFETY**

U.S. DEPARTMENT OF THE INTERIOR
BUREAU OF RECLAMATION
NAVAJO GALLUP WATER SUPPLY PROJECT
NEW MEXICO

SAN JUAN LATERAL
PUMPING PLANT NOS. 4 AND 7

Darryl Liscomb
DESIGNED
Darryl Liscomb
DRAWN
Robert D. Cass
CHECKED
TECH. APPR. Lisa Gentry, P.E.
APPROVED Jay Boggess
Peer Reviewer - Manager, Electrical Design Group

DENVER, CO 2020-01-24

ELECTRICAL INSTALLATION

LIGHTING SECTIONS - PUMPING PLANT NO. 4 CHEMICAL BUILDING EXTERIOR

1695-D-60592

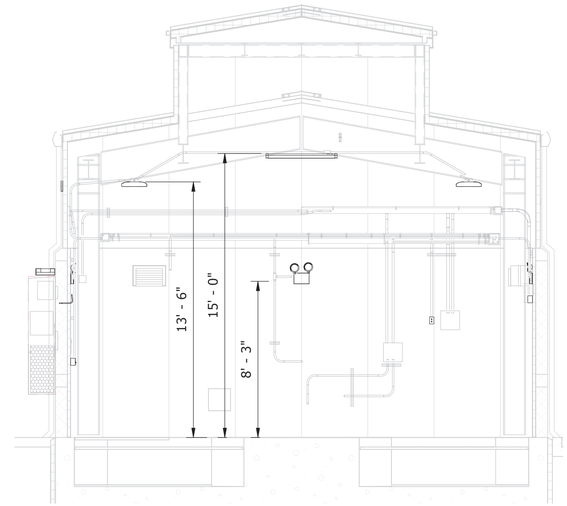

1 60591 LIGHTING ELEVATION
Scale: 1/4" = 1'-0"

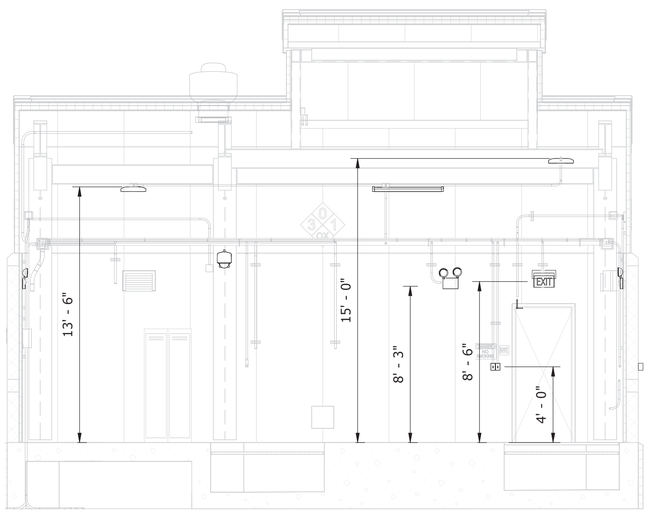

2 60591 LIGHTING ELEVATION
Scale: 1/4" = 1'-0"

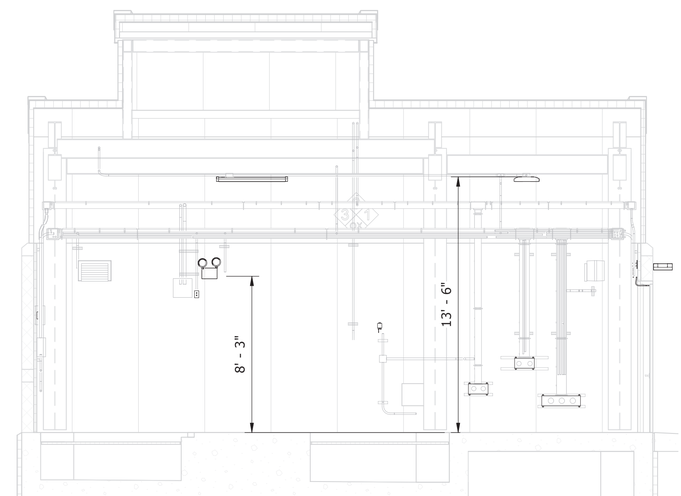

3 60591 LIGHTING ELEVATION
Scale: 1/4" = 1'-0"

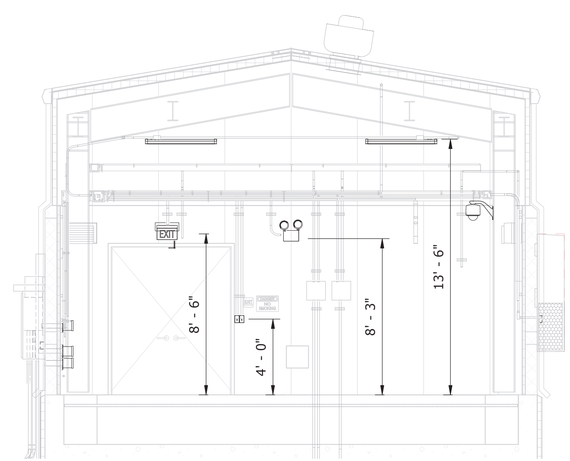

4 60591 LIGHTING ELEVATION
Scale: 1/4" = 1'-0"

RECLAMATION
Managing Water in the West

ALWAYS THINK **SAFETY**

U.S. DEPARTMENT OF THE INTERIOR
BUREAU OF RECLAMATION
NAVAJO GALLUP WATER SUPPLY PROJECT
NEW MEXICO
SAN JUAN LATERAL
PUMPING PLANT NOS. 4 AND 7

Darryl Liscomb
DESIGNED
Darryl Liscomb
DRAWN
Robert D. Cass
CHECKED
TECH. APPR. Lisa Gentry, P.E.
APPROVED Jay Boggess
Peer Reviewer - Manager, Electrical Design Group

DENVER, CO 2020-01-24

ELECTRICAL INSTALLATION

LIGHTING ELEVATIONS - PUMPING PLANT NO. 4 CHEMICAL BUILDING INTERIOR

1695-D-60593

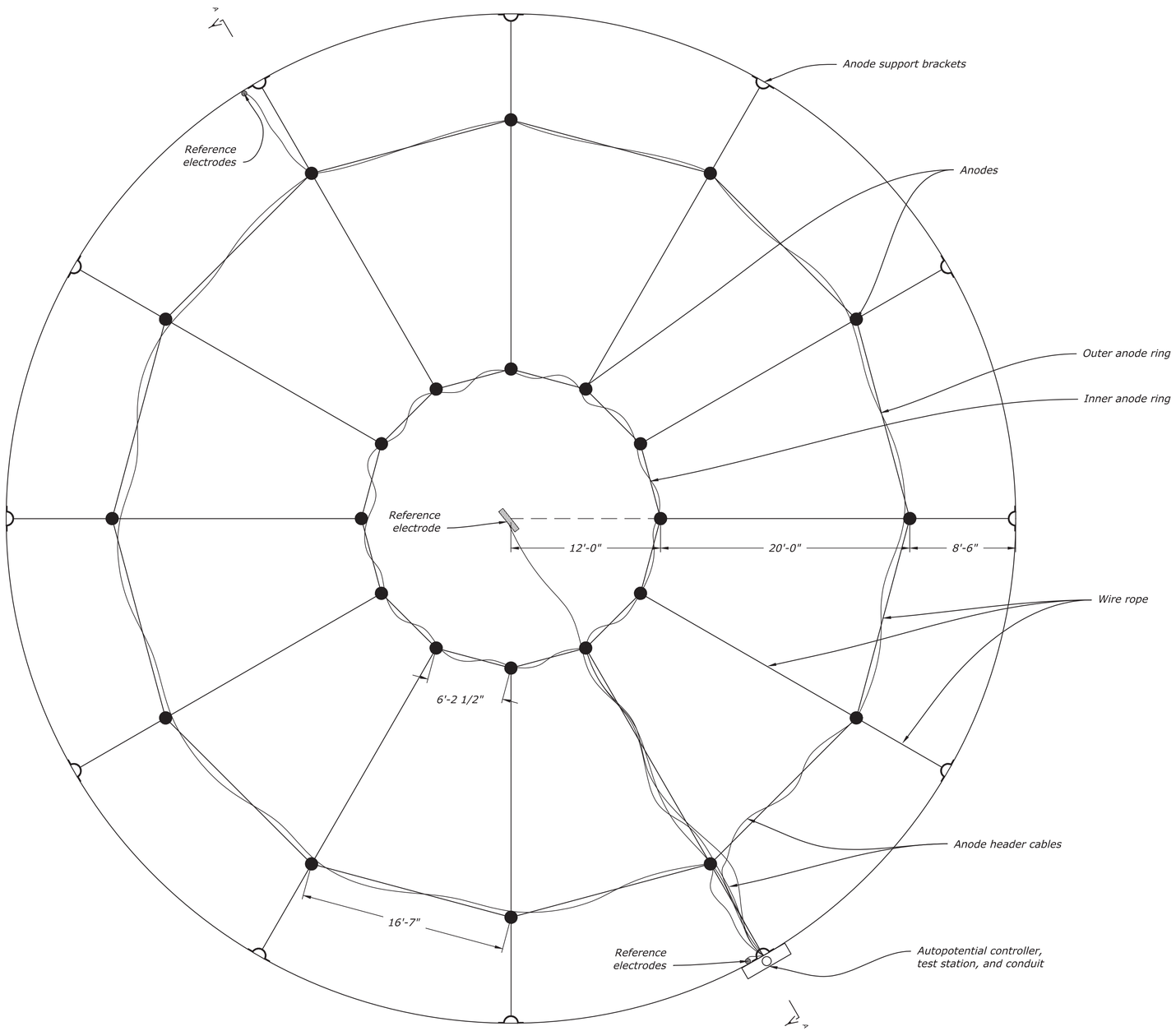

PLAN - 81' DIAMETER TANK

(NOT TO SCALE)

MATERIAL EXPLANATION

Item	Description
Anodes	1.5" diameter high potential magnesium anode
Anode cable	Factory-installed #12 AWG or larger stranded copper with HMWPE sheathing
Anode support brackets	Stainless steel weld-on tie-down ring
Wire rope	$\frac{1}{4}$" diameter vinyl-coated stranded stainless steel
Cable conduit	2" diameter Schedule 40 PVC
Autopotential controller	Automatic potential magnesium anode controller for above-ground storage tanks, pole mountable
Test station	Cast aluminum with 5 terminals minimum, pole mountable
Structure cables	#12 AWG or larger stranded copper with HMWPE sheathing
Reference electrodes	Permanent copper-copper sulfate for use in immersion service
Reference electrode cable	Factory-installed #14 AWG or larger stranded copper with HMWPE sheathing

NOTES

1. Outer anode ring contains 12 anodes evenly spaced in a 64' diameter ring supported by wire rope.
2. Inner anode ring contains 12 anodes evenly spaced in a 24' diameter ring supported by wire rope.
3. Install anode header cables with sufficient length and without stress; loosely wrap around wire rope for support where appropriate.
4. IInstall reference electrode cables from reference electrodes to cable conduit with sufficient length and without stress; loosely wrap around wire rope for support where appropriate.
5. Weld anode support brackets to tank wall for wire rope tie-off.
6. Cathodic protection system components are drawn larger than actual for visualization purposes.

REFERENCE DRAWINGS

PP4 WATER STORAGE TANK PROFILE.....1695-D-60641
STORAGE TANK AND AIR CHAMBER DETAILS.....1695-D-60644

RECLAMATION
Managing Water in the West

ALWAYS THINK SAFETY

U.S. DEPARTMENT OF THE INTERIOR
BUREAU OF RECLAMATION
NAVAJO-GALLUP WATER SUPPLY PROJECT
NEW MEXICO

SAN JUAN LATERAL
PUMPING PLANT NOS. 4 AND 7

Chrissy Henderson
DESIGNED
Chrissy Henderson
DRAWN
Daryl Little
CHECKED
Little, Daryl A
TECH. APPR.
Tordonato, David S P.E.
APPROVED
ADMIN. APPROVAL - Materials Engineer

DENVER, CO 2018-08-14

PUMPING PLANT NO. 4
CATHODIC PROTECTION
SYSTEM

WELDED WATER STORAGE
TANK PLAN

1695-D-60640

SHEET 1

Released

DATE AND TIME PLOTTED
FEBRUARY 26, 2018 16:09
PLOTTED BY
JTONKEY

CAD SYSTEM
AutoCAD Rel. 20.0s
CAD FILENAME
1695-D-60640-RD-1.DWG

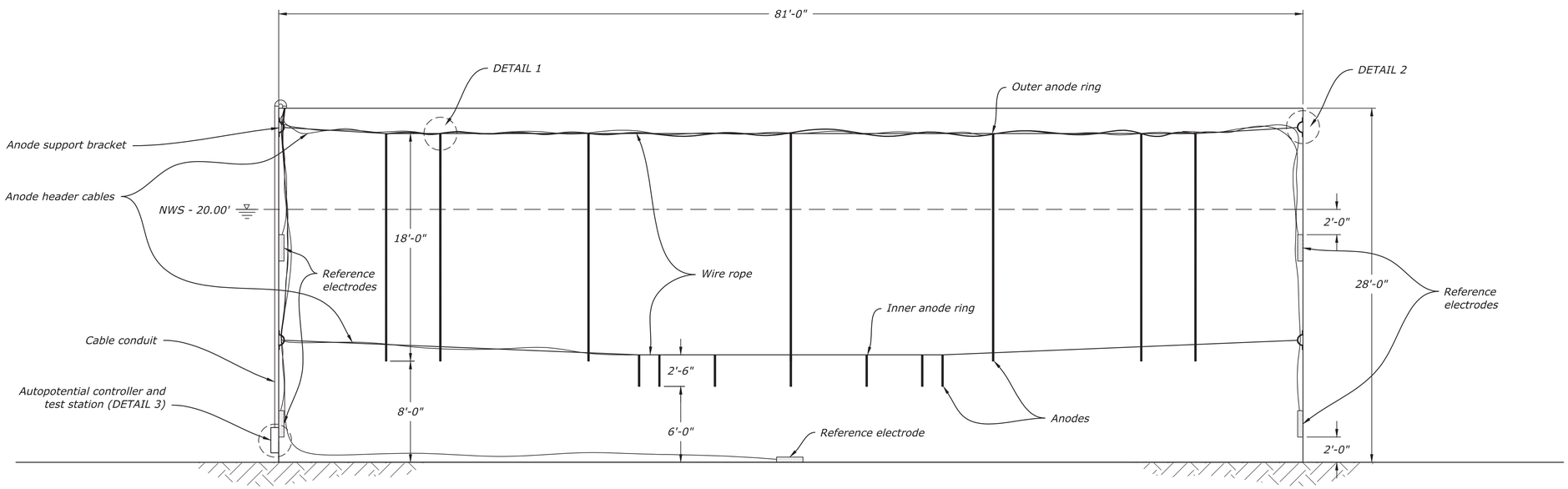

SECTION A-A - 81' DIAMETER TANK

(NOT TO SCALE)

NOTES

1. Outer anode ring contains 12 anodes evenly spaced in a 64' diameter ring supported by wire rope.
2. Inner anode ring contains 12 anodes evenly spaced in a 24' diameter ring supported by wire rope.
3. Install anode header cables with sufficient length and without stress; loosely wrap around wire rope for support where appropriate.
4. IInstall reference electrode cables from reference electrodes to cable conduit with sufficient length and without stress; loosely wrap around wire rope for support where appropriate.
5. Weld anode support brackets to tank wall for wire rope tie-off.
6. Cathodic protection system components are drawn larger than actual for visualization purposes.

REFERENCE DRAWINGS

PP4 WATER STORAGE TANK PLAN.....1695-D-60640
STORAGE TANK AND AIR CHAMBER DETAILS.....1695-D-60644

RECLAMATION
Managing Water in the West

ALWAYS THINK SAFETY

U.S. DEPARTMENT OF THE INTERIOR
BUREAU OF RECLAMATION
NAVAJO-GALLUP WATER SUPPLY PROJECT
NEW MEXICO

SAN JUAN LATERAL

PUMPING PLANT NOS. 4 AND 7

Chrissy Henderson
DESIGNED
Chrissy Henderson
DRAWN
Daryl Little
CHECKED
Little, Daryl A
TECH. APPR.
Tordonato, David S P.E.
APPROVED
ADMIN APPROVAL - Materials Engineer

DENVER, CO 2018-08-14

PUMPING PLANT NO. 4
CATHODIC PROTECTION
SYSTEM

WELDED WATER STORAGE
TANK PROFILE

1695-D-60641

SHEET 1

Released

DATE AND TIME PLOTTED
FEBRUARY 26, 2018 16:09
PLOTTED BY
JTORREY

CAD SYSTEM
AutoCAD Rel. 20.0s
CAD FILENAME
1695-D-60641-AD-1.DWG

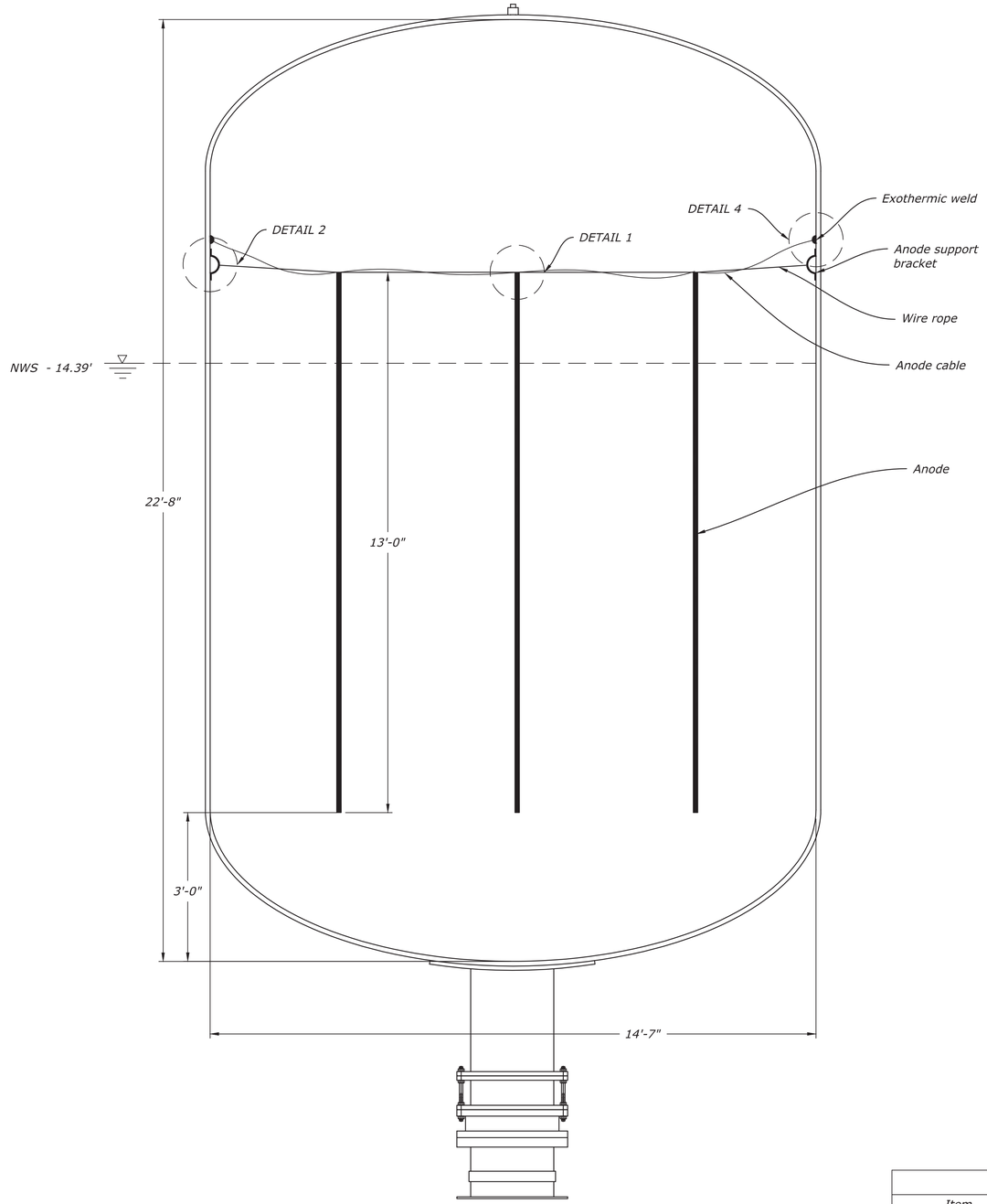

SECTION A-A - 14'-7" DIAMETER AIR CHAMBER

(NOT TO SCALE)

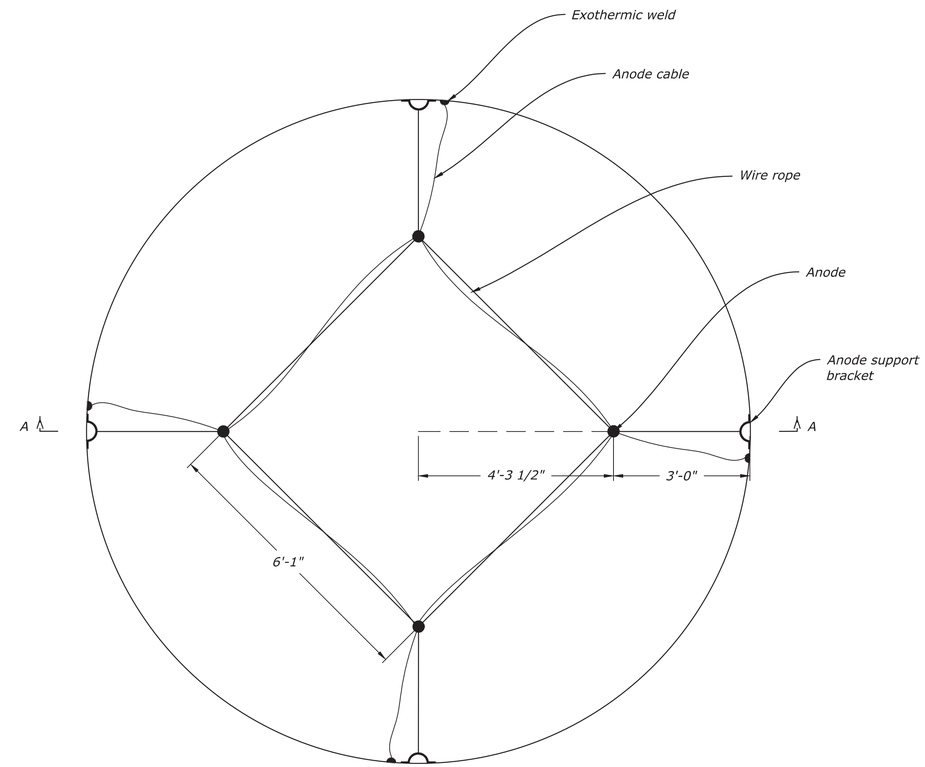

PLAN - 14'-7" DIAMETER AIR CHAMBER

(NOT TO SCALE)

MATERIAL EXPLANATION	
Item	Description
Anodes	1.3" diameter high potential magnesium anode
Anode cable	Factory-installed #12 AWG or larger stranded copper with HMWPE sheathing
Anode support brackets	Stainless steel weld-on tie-down ring
Wire rope	$\frac{1}{4}$" diameter vinyl-coated stranded stainless steel

NOTES

1. Anode ring contains 4 anodes evenly spaced in an 8'7" diameter ring supported by wire rope.
2. Install anode cables from anode to tank wall with sufficient length and without stress; loosely wrap around wire rope for support where appropriate.
3. Exothermically weld anode cables to tank wall for structure connection.
4. Weld anode support brackets to tank wall for wire rope tie-off.
5. Cathodic protection system components are drawn larger than actual for visualization purposes.

REFERENCE DRAWINGS

STORAGE TANK AND AIR CHAMBER DETAILS.....1695-D-60644

RECLAMATION
Managing Water in the West

ALWAYS THINK SAFETY

U.S. DEPARTMENT OF THE INTERIOR
BUREAU OF RECLAMATION
NAVAJO-GALLUP WATER SUPPLY PROJECT
NEW MEXICO

SAN JUAN LATERAL

PUMPING PLANT NOS. 4 AND 7

Chrissy Henderson
DESIGNED
Chrissy Henderson
DRAWN
Daryl Little
CHECKED
Little, Daryl A
TECH. APPR.
Tordonato, David S P.E.
APPROVED
ADMIN APPROVAL - Materials Engineer

DENVER, CO 2018-08-14

PUMPING PLANT NO. 4
CATHODIC PROTECTION
SYSTEM

AIR CHAMBER PLAN AND
PROFILE

1695-D-60647

SHEET 1

Released

DATE AND TIME PLOTTED
FEBRUARY 22, 2018 14:02
PLOTTED BY
JTORREY

CAD SYSTEM
AutoCAD Rel. 20.0s
CAD FILENAME
1695-D-60647-RD-1.DWG

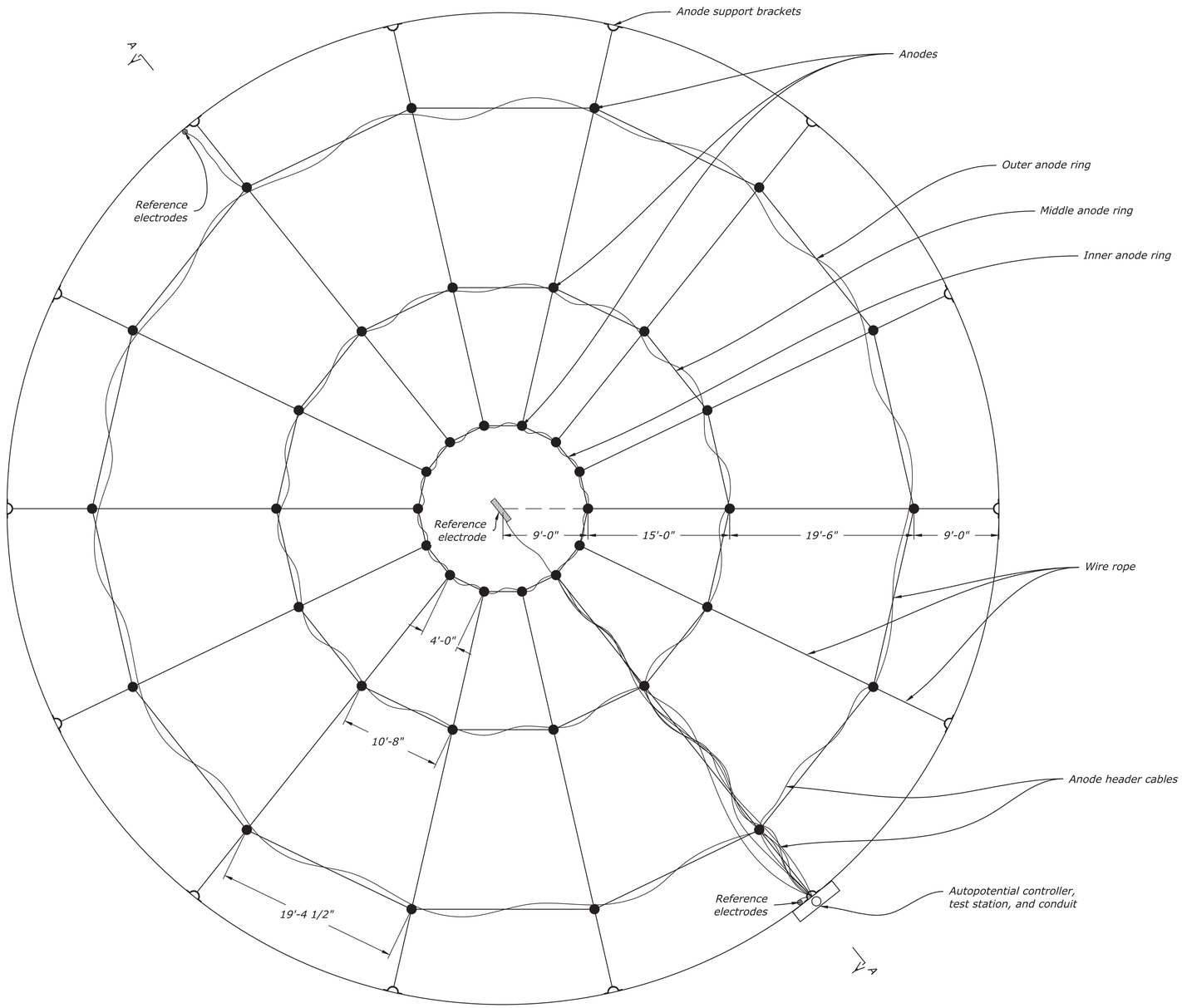

PLAN - 105' DIAMETER TANK

(Not to Scale)

MATERIAL EXPLANATION	
Item	Description
Anodes	1.5" diameter high potential magnesium anode
Anode cable	Factory-installed #12 AWG or larger stranded copper with HMWPE sheathing
Anode support brackets	Stainless steel weld-on tie-down ring
Wire rope	$\frac{1}{4}$" diameter vinyl-coated stranded stainless steel
Cable conduit	2" diameter Schedule 40 PVC
Autopotential controller	Automatic potential magnesium anode controller for above-ground storage tanks, pole mountable
Test station	Cast aluminum with 5 terminals minimum, pole mountable
Structure cables	#12 AWG or larger stranded copper with HMWPE sheathing
Reference electrodes	Permanent copper-copper sulfate for use in immersion service
Reference electrode cable	Factory-installed #14 AWG or larger stranded copper with HMWPE sheathing

NOTES

1. Outer anode ring contains 14 anodes evenly spaced in an 87' diameter ring supported by wire rope.
2. Middle anode ring contains 14 anodes evenly spaced in a 48' diameter ring supported by wire rope.
3. Inner anode ring contains 14 anodes evenly spaced in an 18' diameter ring supported by wire rope.
4. Install anode header cables with sufficient length and without stress; loosely wrap around wire rope for support where appropriate.
5. Install reference electrode cables from reference electrodes to cable conduit with sufficient length and without stress; loosely wrap around wire rope for support where appropriate.
6. Weld anode support brackets to tank wall for wire rope tie-off.
7. Cathodic protection system components are drawn larger than actual for visualization purposes.

REFERENCE DRAWINGS

PP7 WATER STORAGE TANK PROFILE.....1695-D-60643
STORAGE TANK AND AIR CHAMBER DETAILS.....1695-D-60644

RECLAMATION
Managing Water in the West

ALWAYS THINK SAFETY

U.S. DEPARTMENT OF THE INTERIOR
BUREAU OF RECLAMATION
NAVAJO-GALLUP WATER SUPPLY PROJECT
NEW MEXICO

SAN JUAN LATERAL

PUMPING PLANT NOS. 4 AND 7

Chrissy Henderson
DESIGNED
Chrissy Henderson
DRAWN
Daryl Little
CHECKED
Little, Daryl A
TECH. APPR.
Tordonato, David S P.E.
APPROVED
ADMIN APPROVAL - Materials Engineer

DENVER, CO 2018-08-14

PUMPING PLANT NO. 7
CATHODIC PROTECTION SYSTEM

WELDED WATER STORAGE TANK PLAN

1695-D-60642

SHEET 1

Released

DATE AND TIME PLOTTED
FEBRUARY 22, 2018 14:17
PLOTTED BY
JTORREY

CAD SYSTEM
AutoCAD Rel. 20.0s
CAD FILENAME
1695-D-60642-RD-1.DWG

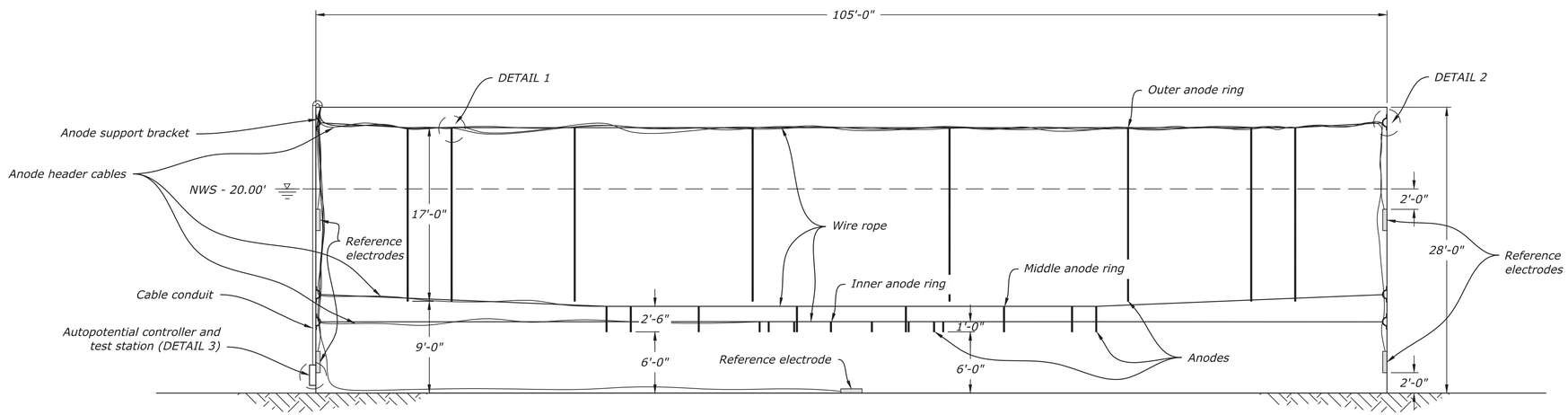

SECTION A-A - 105' DIAMETER TANK

(NOT TO SCALE)

NOTES

1. Outer anode ring contains 14 anodes evenly spaced in an 87' diameter ring supported by wire rope.
2. Middle anode ring contains 14 anodes evenly spaced in a 48' diameter ring supported by wire rope.
3. Inner anode ring contains 14 anodes evenly spaced in an 18' diameter ring supported by wire rope.
4. Install anode header cables with sufficient length and without stress; loosely wrap around wire rope for support where appropriate.
5. Install reference electrode cables from reference electrodes to cable conduit with sufficient length and without stress; loosely wrap around wire rope for support where appropriate.
6. Weld anode support brackets to tank wall for wire rope tie-off.
7. Cathodic protection system components are drawn larger than actual for visualization purposes.

REFERENCE DRAWINGS

PP7 WATER STORAGE TANK PLAN.....1695-D-60642
STORAGE TANK AND AIR CHAMBER DETAILS.....1695-D-60644

RECLAMATION
Managing Water in the West

ALWAYS THINK SAFETY

U.S. DEPARTMENT OF THE INTERIOR
BUREAU OF RECLAMATION
NAVAJO-GALLUP WATER SUPPLY PROJECT
NEW MEXICO

SAN JUAN LATERAL

PUMPING PLANT NOS. 4 AND 7

Chrissy Henderson
DESIGNED
Chrissy Henderson
DRAWN
Daryl Little
CHECKED
Little, Daryl A
TECH. APPR.
Tordonato, David S P.E.
APPROVED
ADMIN APPROVAL - Materials Engineer

DENVER, CO 2018-08-14

PUMPING PLANT NO. 7
CATHODIC PROTECTION
SYSTEM

WELDED WATER STORAGE
TANK PROFILE

1695-D-60643

SHEET 1

Released

DATE AND TIME PLOTTED
FEBRUARY 22, 2018 14:03
PLOTTED BY
JTORREY

CAD SYSTEM
AutoCAD Rel. 20.0s
CAD FILENAME
1695-D-60643-AD-1.DWG

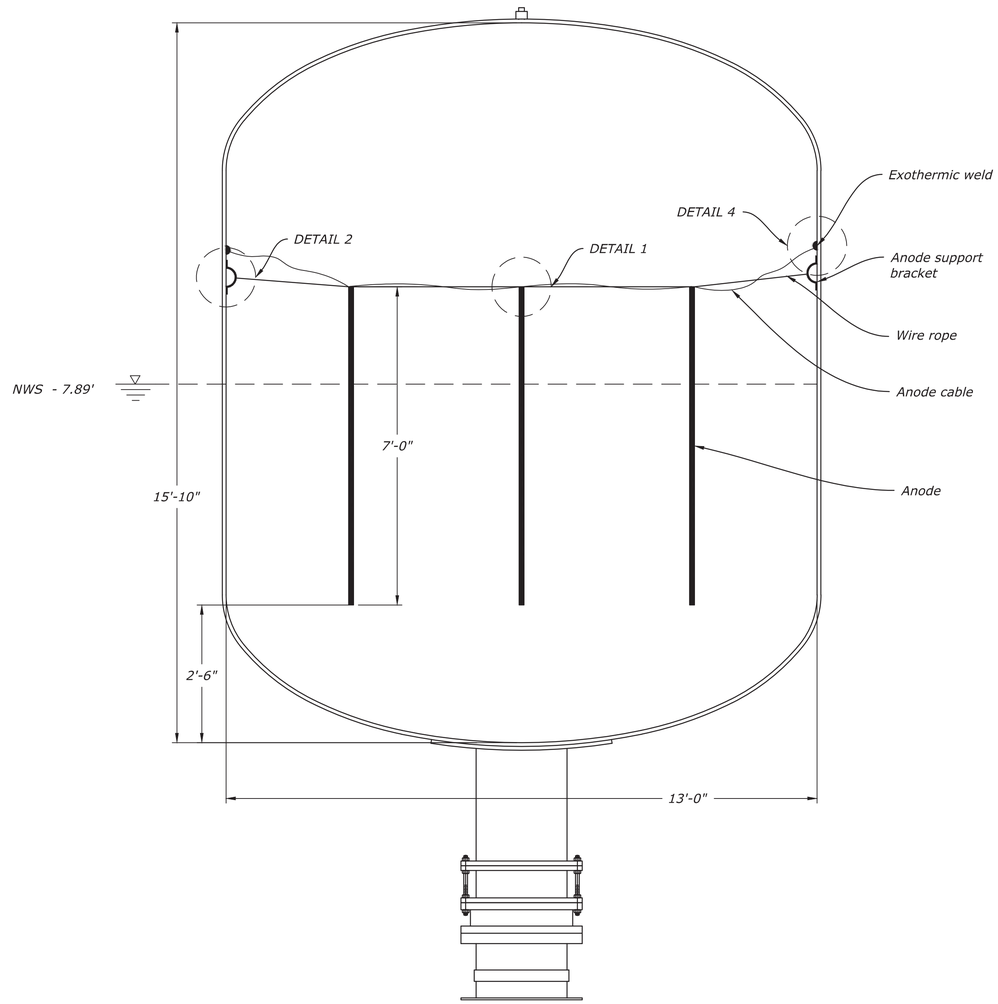

SECTION A-A - 13' DIAMETER AIR CHAMBER

(NOT TO SCALE)

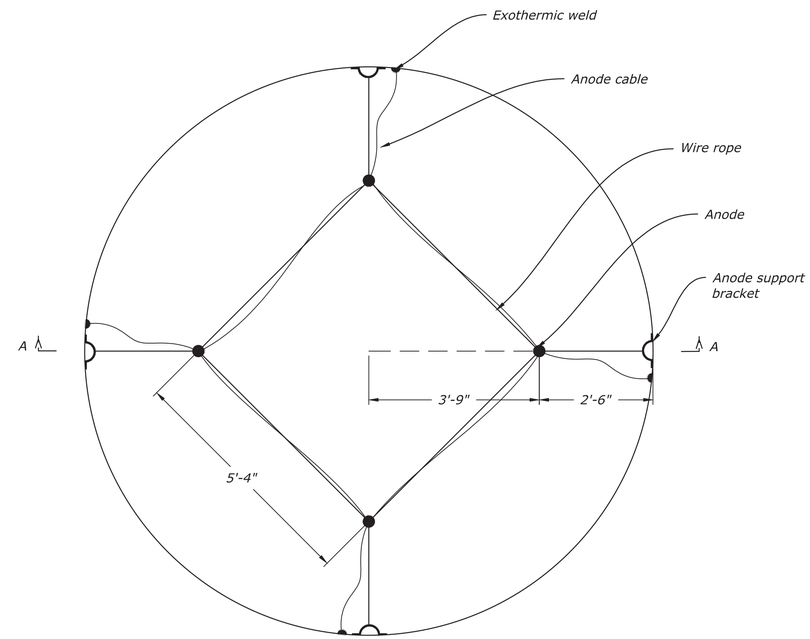

PLAN - 13' DIAMETER AIR CHAMBER

(NOT TO SCALE)

MATERIAL EXPLANATION

Item	Description
Anodes	1.3" diameter high potential magnesium anode
Anode cable	Factory-installed #12 AWG or larger stranded copper with HMWPE sheathing
Anode support brackets	Stainless steel weld-on tie-down ring
Wire rope	$\frac{1}{4}$" diameter vinyl-coated stranded stainless steel

NOTES

1. Anode ring contains 4 anodes evenly spaced in an 7'6" diameter ring supported by wire rope.
2. Install anode cables from anode to tank wall with sufficient length and without stress; loosely wrap around wire rope for support where appropriate.
3. Exothermically weld anode cables to tank wall for structure connection.
4. Weld anode support brackets to tank wall for wire rope tie-off.
5. Cathodic protection system components are drawn larger than actual for visualization purposes.

REFERENCE DRAWINGS

STORAGE TANK AND AIR CHAMBER DETAILS.....1695-D-60644

RECLAMATION
Managing Water in the West

ALWAYS THINK SAFETY

U.S. DEPARTMENT OF THE INTERIOR
BUREAU OF RECLAMATION
NAVAJO-GALLUP WATER SUPPLY PROJECT
NEW MEXICO

SAN JUAN LATERAL

PUMPING PLANT NOS. 4 AND 7

Chrissy Henderson
DESIGNED
Chrissy Henderson
DRAWN
Daryl Little
CHECKED
Little, Daryl A
TECH. APPR.
Tordonato, David S P.E.
APPROVED
ADMIN APPROVAL - Materials Engineer

DENVER, CO 2018-08-14

PUMPING PLANT NO. 7
CATHODIC PROTECTION SYSTEM

AIR CHAMBER PLAN AND PROFILE

1695-D-60648

SHEET 1

Released

DATE AND TIME PLOTTED
FEBRUARY 22, 2018 14:00
PLOTTED BY
JTORNEY

CAD SYSTEM
AutoCAD Rel. 20.0s
CAD FILENAME
1695-D-60648-RD-1.DWG

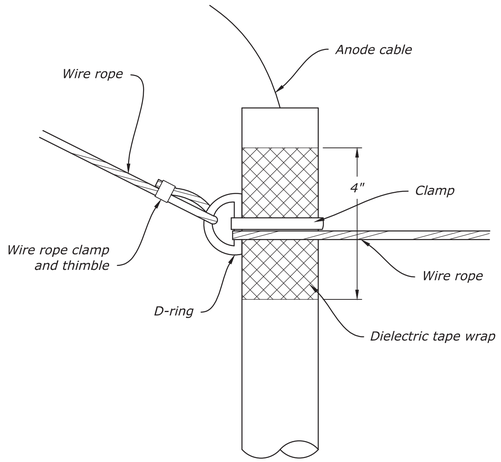

DETAIL 1 - ANODE ROPE SUPPORT (TYP.)

(NOT-TO-SCALE)

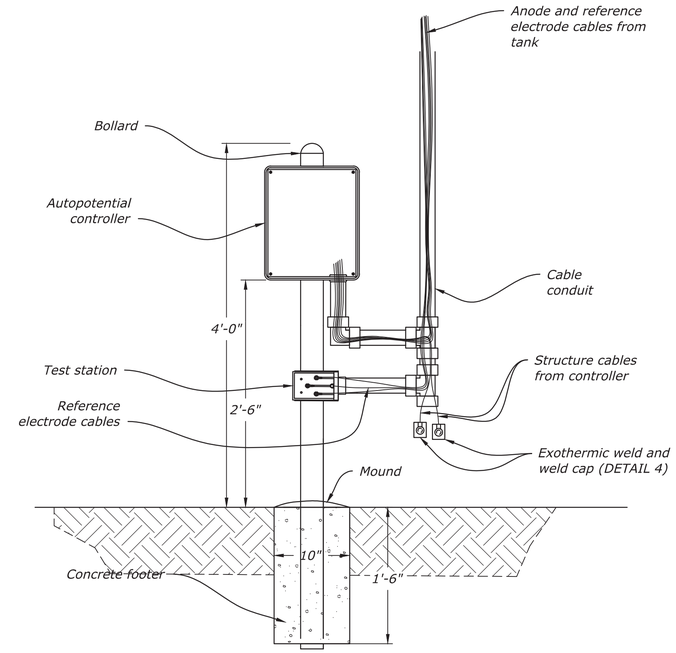

DETAIL 3 - AUTOPOTENTIAL CONTROLLER AND TEST STATION

(NOT-TO-SCALE)

MATERIAL EXPLANATION	
Item	Description
D-ring	Stainless steel
Clamp and thimble	Stainless steel, two clamps and one thimble per connection, sized for wire rope
Dielectric tape wrap	High dielectric adhesive tape suitable for immersion service
Bollard	3" diameter galvanized steel post with capped top
Weld cap	Prefabricated, primerless patch to repair coating surrounding exothermic weld

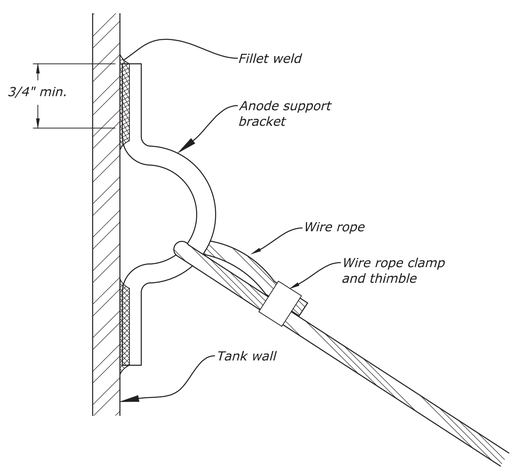

DETAIL 2 - ANODE SUPPORT BRACKET (TYP.)

(NOT-TO-SCALE)

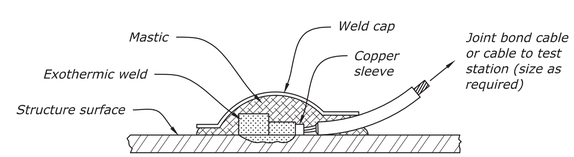

DETAIL 4 - EXOTHERMIC WELD

(NOT TO SCALE)

NOTES

1. Weld anode support brackets to tank wall for wire rope tie-off.
2. Autopotential controller and test station mounted directly to bollard.
3. Cathodic protection system components are drawn larger than actual for visualization purposes.

REFERENCE DRAWINGS

PP4 WATER STORAGE TANK PLAN.....1695-D-60640
PP4 WATER STORAGE TANK PROFILE.....1695-D-60641
PP7 WATER STORAGE TANK PLAN.....1695-D-60642
PP7 WATER STORAGE TANK PROFILE.....1695-D-60643
PP4 AIR CHAMBER PLAN AND PROFILE.....1695-D-60647
PP7 AIR CHAMBER PLAN AND PROFILE.....1695-D-60648

RECLAMATION
Managing Water in the West

ALWAYS THINK SAFETY

U.S. DEPARTMENT OF THE INTERIOR
BUREAU OF RECLAMATION
NAVAJO-GALLUP WATER SUPPLY PROJECT
NEW MEXICO

SAN JUAN LATERAL

PUMPING PLANT NOS. 4 AND 7

Chrissy Henderson
DESIGNED
Chrissy Henderson
DRAWN
Daryl Little
CHECKED
Little, Daryl A
TECH. APPR.
Tordonato, David S P.E.
APPROVED
ADMIN APPROVAL - Materials Engineer

DENVER, CO 2018-08-08

CATHODIC PROTECTION SYSTEM

STORAGE TANK AND AIR CHAMBER DETAILS

1695-D-60644

SHEET 1

Released

DATE AND TIME PLOTTED
Not Plotted
PLOTTED BY
Not Plotted

CAD SYSTEM
AUTOCAD
CAD FILENAME
UNKNOWN

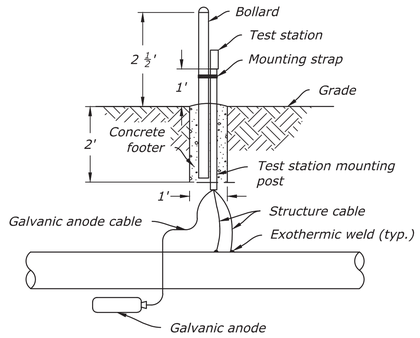

ANODE TEST STATION - SINGLE ANODE

(NOT TO SCALE)

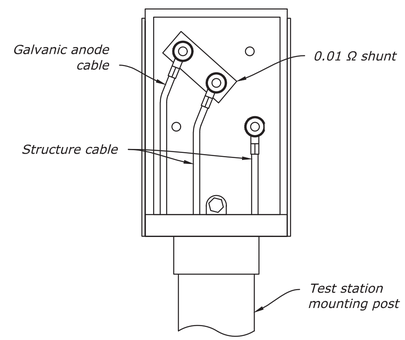

TEST BOARD - SINGLE ANODE

(NOT TO SCALE)

CORROSION PROTECTION MATERIALS TABLE	
Item	Description
Test station	Cast aluminum with 5 terminals, minimum, post mounted
Test station mounting post	2" Ø galvanized steel post
Bollard	3" Ø coated steel post with capped top
Structure cable (test station)	#12 AWG/HMWPE (black)
Anode (galvanic)	UltraMag high potential magnesium anodes (20-lb)
Galvanic anode cable	#12 AWG/HMWPE (red if available)
Shunt	0.01 Ohm calibrated resistor

REFERENCE DRAWINGS

PUMPING PLANT YARD PIPING DETAILS.....1695-D-60645

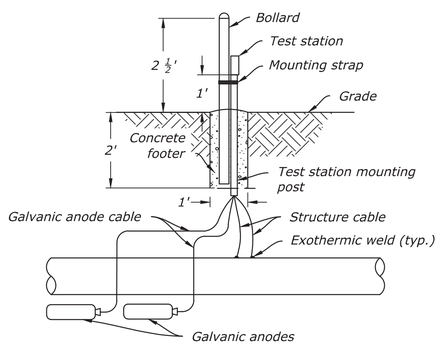

ANODE TEST STATION - MULTIPLE ANODES

(NOT TO SCALE)

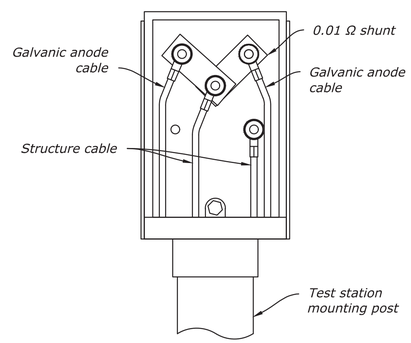

TEST BOARD - MULTIPLE ANODES

(NOT TO SCALE)

NOTES

1. Place anodes at the same depth as the bottom of the structure.
2. One shunt for each anode installed at location.
3. Number of anodes at each structure in accordance with Specification Section 26 42 13.
4. Anode bed and test station details listed in Specification section 26 42 13.
5. Anodes and anode beds are to be installed a minimum distance of 30 feet from the structure.
6. Exothermic welds on pipeline shown rotated. Weld cables to top center of pipe min. 12" apart.
7. Cable trench detail to be used for all structure cables (test station) and galvanic anode cables.

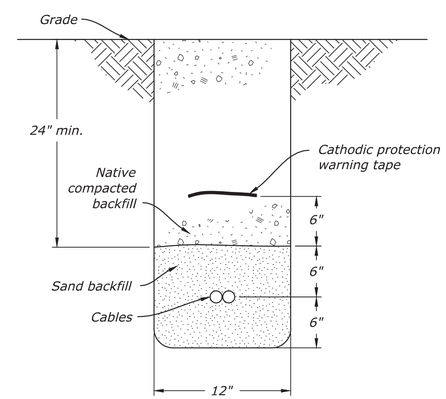

CABLE TRENCH DETAIL

(NOT TO SCALE)

RECLAMATION
Managing Water in the West

ALWAYS THINK SAFETY

U.S. DEPARTMENT OF THE INTERIOR
BUREAU OF RECLAMATION
NAVAJO-GALLUP WATER SUPPLY PROJECT
NEW MEXICO

SAN JUAN LATERAL

PUMPING PLANT NOS. 4 AND 7

Chrissy Henderson
DESIGNED
Chrissy Henderson
DRAWN
Grace Weber
CHECKED
Little, Daryl A
TECH. APPR.
Tordonato, David S P.E.
APPROVED
ADMIN APPROVAL - Materials Engineer

DENVER, CO 2019-12-06

GALVANIC ANODE CATHODIC PROTECTION

PUMPING PLANT TURNOUT PIPE

1695-D-60649

SHEET 1

Released

DATE AND TIME PLOTTED
Not Plotted
PLOTTED BY
Not Plotted

CAD SYSTEM
AUTOCAD
CAD FILENAME
UNKNOWN

Released

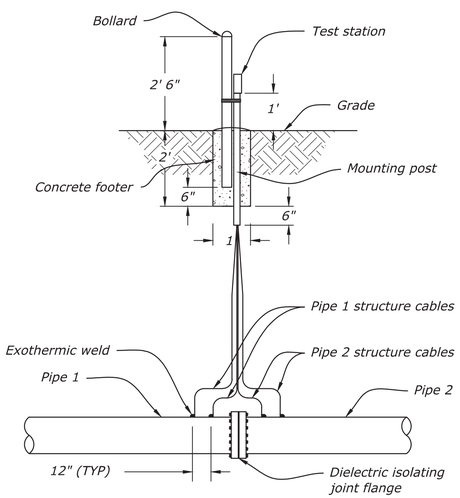

IJFK MONITORING STATION

(NOT TO SCALE)

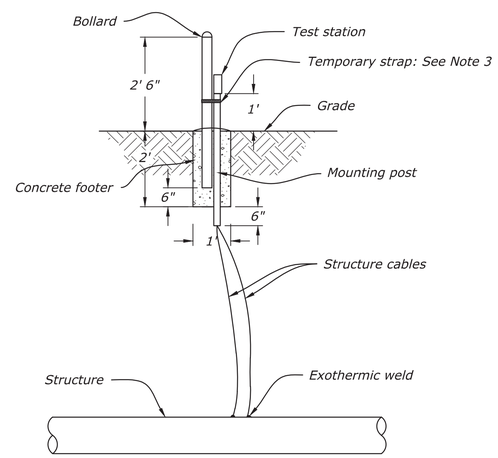

CORROSION MONITORING STATION

(NOT TO SCALE)

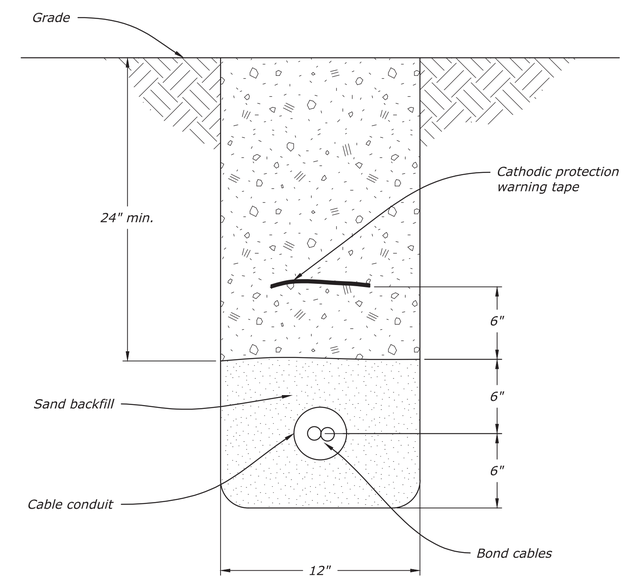

CABLE CONDUIT TRENCH DETAIL

(NOT TO SCALE)

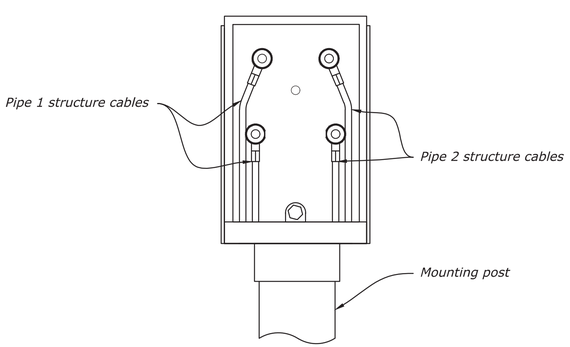

TEST BOARD- IJFK STATION

(NOT TO SCALE)

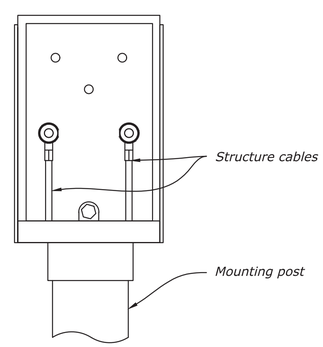

TEST BOARD- CORROSION MONITORING STATION

(NOT TO SCALE)

MATERIAL EXPLANATION	
Item	Description
Bollard	3" diameter galvanized steel post with capped top
Test station	cast aluminum with 5 terminals minimum, pole mountable
Mounting post	2" diameter galvanized steel post
Cable conduit	Schedule 80 PVC sized to fit cables

NOTES

1. Trench detail to be used for all horizontal segments of buried conduit.
2. Cathodic protection system components are drawn larger than actual for visualization.
3. Temporary strap required during installation in concrete footer.

REFERENCE DRAWINGS

PUMPING PLANT YARD PIPING DETAILS.....1695-D-60645

RECLAMATION
Managing Water in the West

ALWAYS THINK SAFETY

U.S. DEPARTMENT OF THE INTERIOR
BUREAU OF RECLAMATION
NAVAJO-GALLUP WATER SUPPLY PROJECT
NEW MEXICO

SAN JUAN LATERAL

PUMPING PLANT NOS. 4 AND 7

Chrissy Henderson
DESIGNED
Chrissy Henderson
DRAWN
Daryl Little
CHECKED
Little, Daryl A
TECH. APPR.
Tordonato, David S P.E.
APPROVED
ADMIN APPROVAL - Materials Engineer

DENVER, CO 2018-08-14

CORROSION MONITORING

PUMPING PLANT YARD PIPING

1695-D-60646

SHEET 1

DATE AND TIME PLOTTED Not Plotted
PLOTTED BY Not Plotted

CAD SYSTEM AUTOCAD
CAD FILENAME UNKNOWN

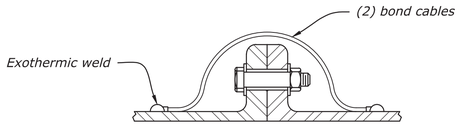

FLANGED JOINT (NON-ISOLATING)

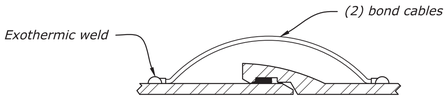

PUSH-ON JOINT

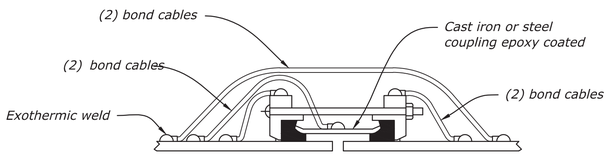

NOTE: Bond each individual metallic component.

FLEXIBLE COUPLING (MULTIPLE COMPONENT COUPLING)

JUMPER BOND INSTALLATION

(NOT TO SCALE)

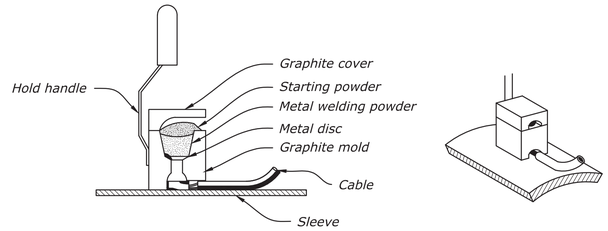

STEP 1. Grind structure connection area (3"x3") to bare shiny metal and clean.

STEP 2. Strip insulation from wire. Attach sleeve.

STEP 3. Hold mold firmly with opening away from operator & ignite with flint gun.

STEP 4. Remove slag from connection and peen weld for soundness.

STEP 5. Cover connection and exposed structure surface with a bituminuus coating compound.

NOTE: Procedure shown above is to be used as a general guide only. Consult manufacturer's literature for specific installation instructions.

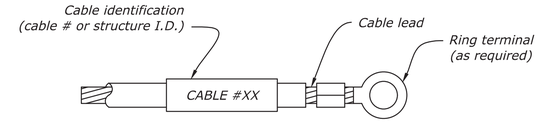

CABLE IDENTIFICATION

(NOT TO SCALE)

MATERIAL EXPLANATION	
Item	Description
Bond cable	#2 AWG or larger stranded copper with HMWPE sheathing
Weld cap	Prefabricated, primerless patch to repair coating surrounding exothermic weld

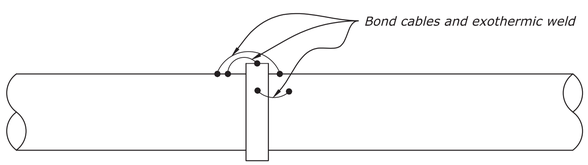

VICTAULIC BOND DETAIL

(NOT TO SCALE)

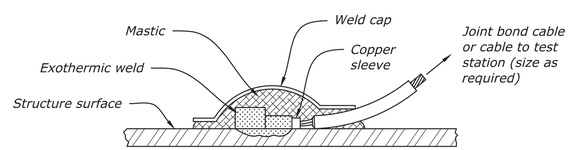

EXOTHERMIC WELDING

(NOT TO SCALE)

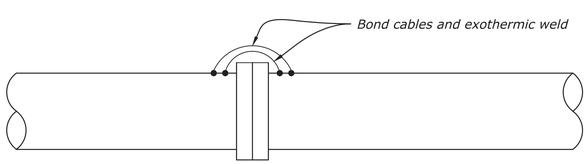

FLANGE-FLANGE BOND DETAIL

(NOT TO SCALE)

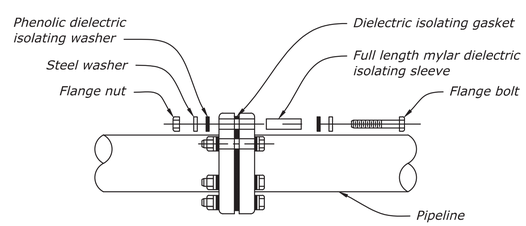

IJFK - DIELECTRIC ISOLATING JOINT FLANGE KIT

(NOT TO SCALE)

NOTES

1. Any non-welded, non-isolating joints, valves, and fittings require bonding to achieve electrical continuity. Use bonding cables located near the pipe invert.
2. Do not install joint bonds on welded joints and/or joints called out to be electrically isolated.
2. Bonding cables should be exothermically welded to the pipe near the invert.
3. Cover the exposed copper cable, weld nugget, and ferrous material at the weld with an approved dielectric coating or cap.
4. Cover cable I.D. with clear heat-shrink tubing.

REFERENCE DRAWINGS

PUMPING PLANT YARD PIPING.....1695-D-60646

RECLAMATION
Managing Water in the West

ALWAYS THINK SAFETY

U.S. DEPARTMENT OF THE INTERIOR
BUREAU OF RECLAMATION
NAVAJO-GALLUP WATER SUPPLY PROJECT
NEW MEXICO

SAN JUAN LATERAL

PUMPING PLANT NOS. 4 AND 7

Chrissy Henderson
DESIGNED
Chrissy Henderson
DRAWN
Daryl Little
CHECKED
Little, Daryl A
TECH. APPR.
Tordonato, David S P.E.
APPROVED
ADMIN APPROVAL - Materials Engineer

DENVER, CO 2018-08-08

CORROSION MONITORING

PUMPING PLANT YARD
PIPING DETAILS

1695-D-60645

SHEET 1

Released

DATE AND TIME PLOTTED
FEBRUARY 22, 2018 15:37
PLOTTED BY
JTORNEY

CAD SYSTEM
AutoCAD Rel. 20.0s
CAD FILENAME
1695-D-60645-RD-1.DWG

GROUNDING METAL CONDUITS

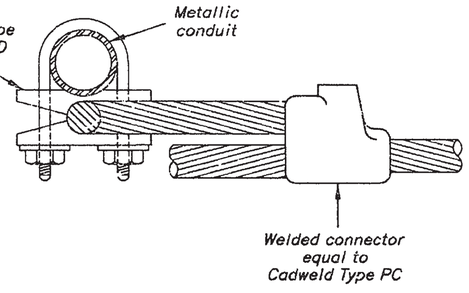

METAL CONDUIT GROUNDING TABLE			
NDUIT SIZE	MINIMUM SIZE OF GROUND CABLE	NUMBER OF TAPS	CLAMP SIMILAR TO BURNDY TYPE
" to 1½"	No.4 A.W.G.	1	GAR
2" to 3"	No.1 A.W.G.	1	GAR
Above 3"	No.1 A.W.G.	2	GD

BONDING CONDUITS AT EXPANSION JOINTS

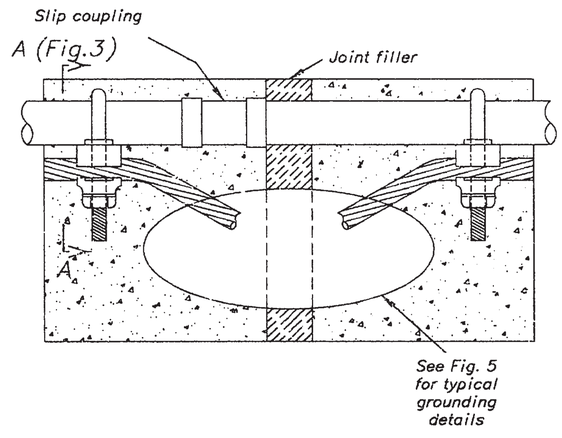

NOTE

CLAMPS SHALL BE EQUAL TO BURNDY TYPE GAR OR GD AND BARE COPPER CABLE IN ACCORDANCE WITH THE TABLE IN FIGURE 1 OR A BONDING JUMPER EQUAL TO O.Z. TYPE BJ (WITH BRONZE FITTINGS) MAY BE USED.

BONDING CONDUITS AROUND JUNCTION BOXES

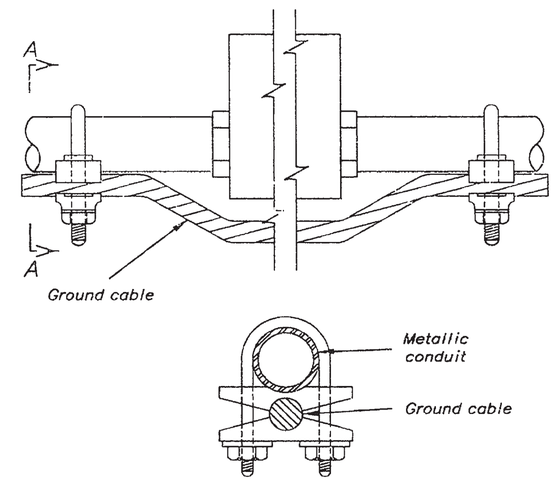

SECTION A–A

NOTE

CLAMPS SHALL BE EQUAL TO BURNDY TYPE GAR OR GD AND BARE COPPER CABLE IN ACCORDANCE WITH THE TABLE IN FIGURE 1 OR A BONDING JUMPER EQUAL TO O.Z. TYPE BJ (WITH BRONZE FITTINGS) MAY BE USED.

FIGURE 4

MBEDDED GROUND CONNECTOR WITH EQUIPMENT GROUND CABLE

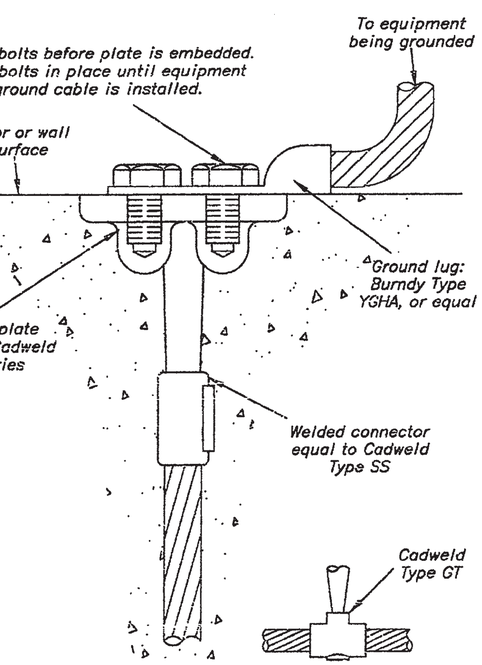

FIGURE 5

CROSSING EXPANSION AND CONTRACTION JOINTS WITH GROUNDING CABLE

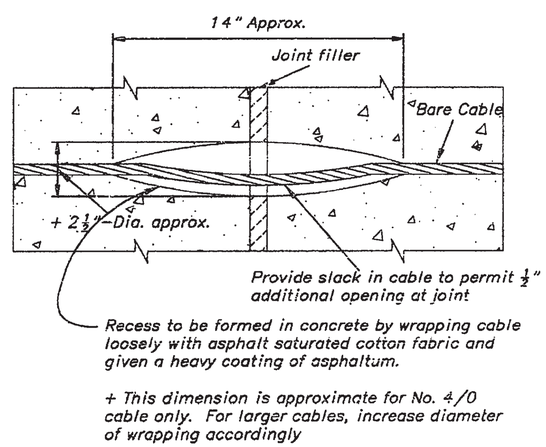

+ This dimension is approximate for No. 4/0 cable only. For larger cables, increase diameter of wrapping accordingly

NOTE

THE CROSSING OF EXPANSION JOINTS WITH EMBEDDED GROUND CABLE SHOULD BE AVOIDED WHENEVER POSSIBLE. THE EMBEDDED GROUNDING SYSTEM FOR EACH UNIT OR BLOCK SHOULD BE SELF

FIGURE 6

GROUNDING OF THREE PHASE BUS STRUCTURE

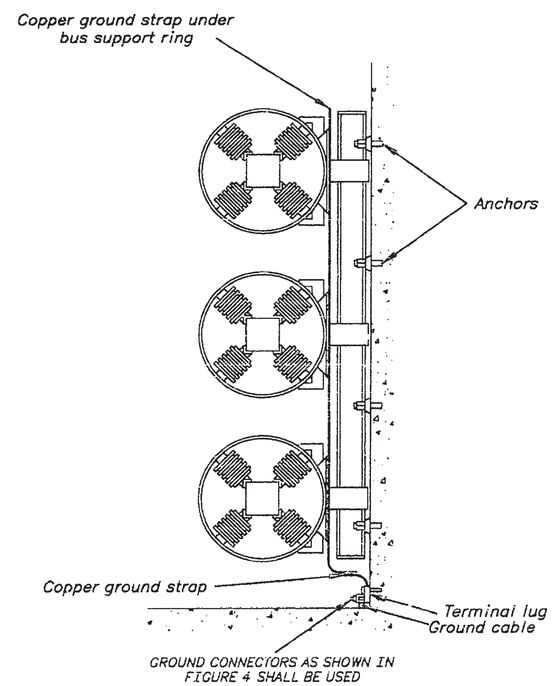

installed. Terminations as shown
40–D–4334 shall be used in lie
Approximate locations only are sh
locations to be determined in fiel

2. Refer to conduit drawings or gene
whenever available, for more exac

3. Metal conduits shall be grounded
occurs in a run of metal conduit,
bonded across the break. In case
the each section shall be grounde
contractor shall ground each meta
therof, that he installs. Junction
containing protective equipment
installed with a locknut and bondi
considered a break when the volta
ground, but shall be so considere
junction or pull boxes in runs of
be individually grounded. All box
protective devices shall be indivi

4. Ground cable shall be No.4 A.W.G.

5. All paint, enamel, and scale shall
contact on metal surfaces before
connections.

6. All bolts, machine screws, nuts a
grounding connections shall be s

7. Cable shields and one conductor
shall be grounded at both ends.

8. Thermoweld, Cadweld, or an appro
shall be used in making connecti
embedded in concrete, direct buri
superstructure.

9. Where Thermoweld, Cadweld, or a
process is used it shall be perfor
welding equipment in accordance
instructions and the material sha

10. All ground connectors shall be u
connectors to be in accordance w

REFERENCE D

TYPICAL GROUNDING DETAILS (Sh
SWITCHYARDS & SUBSTATIONS –
DETAILS
PLATFORM GROUNDING DETAILS
CABLE TRENCH GROUNDING
GROUNDING SUPPORTS ON TUBULA
STEEL STRUCTURES
FENCE GROUNDING DETAILS

REV. NO		
3	2004–07–06 D – RAB	CHANGED NOTE 10, ADDED DRAWINGS, OTHER MINOR RE
3 – 10 – 00 D – L.G.		REDRAWN IN AUTOCAD R.14 FORM
12 – 2 –85 D – G.D.O.		REVISED TO SHOW CURRENT PROD

THIS DRAWING S
IN PART DRAWING 40–D–4

ALWAYS THINK

UNITED STATE
DEPARTMENT OF THE
BUREAU OF RECLA

STANDARD DES

ELECTRICAL INS

TYPICAL GROUNDI

FIGURE 1

GROUND MATS

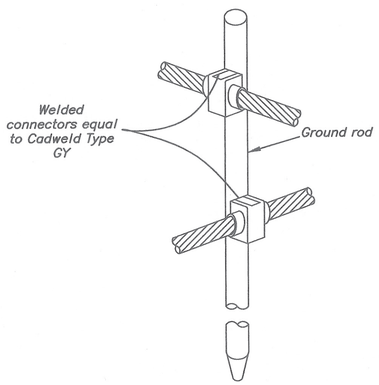

GROUND ROD DETAILS

FIGURE 2

GROUND MATS

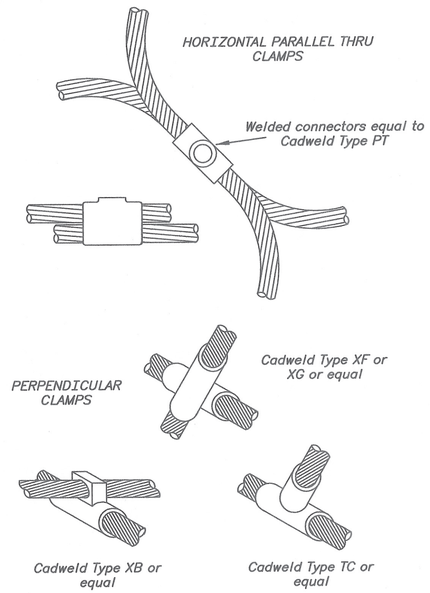

FIGURE 3

LIGHTING OR MISC POWER CABINETS

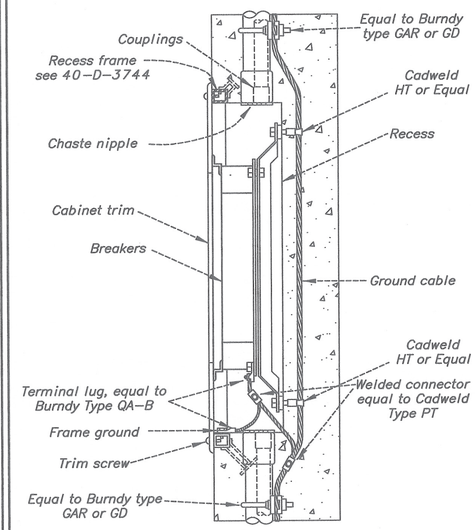

SECTIONAL ELEVATION

FIGURE 4

RAILS

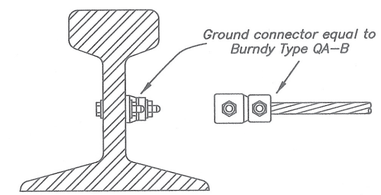

EXPOSED INSTALLATION

CONNECTION TO RAIL

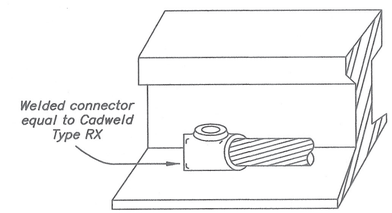

EMBEDDED INSTALLATION

CONNECTION TO RAIL

NOTES

1. See drawing 40-D-4334 for notes and list of reference drawings.

GROUND SYMBOLS

(Used on Plan Drawings)

- Indicates ground cable embedded in concrete
- Indicates ground cable concealed but not embedded in concrete
- Indicates ground cable exposed
- Indicates ground rod
- Indicates ground connection
- Indicates ground cable riser
- Indicates embedded ground plate

FIGURE 5

FLOOR FRAMES

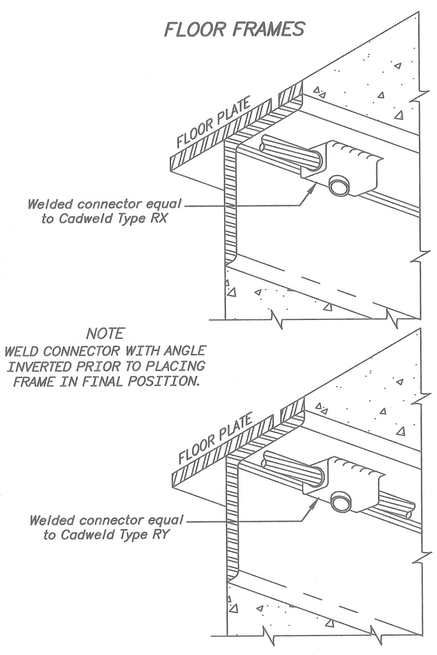

NOTE
WELD CONNECTOR WITH ANGLE INVERTED PRIOR TO PLACING FRAME IN FINAL POSITION.

FIGURE 6

RAILING POST BASES AND HANDRAIL SUPPORTS

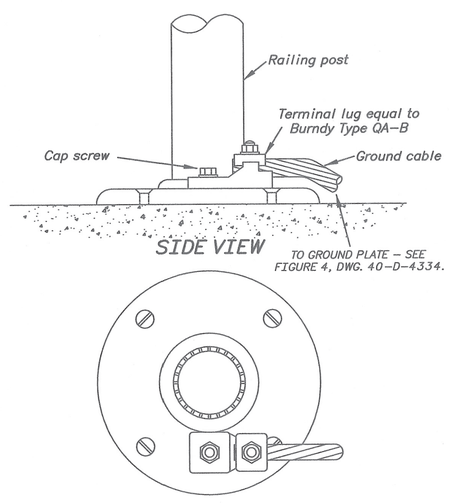

PLAN VIEW

CONNECTION TO RAILING POST BASE

(DETAILS FOR GROUNDING HANDRAIL SUPPORTS ARE SIMILAR)

FIGURE 7

OIL TANK GROUNDING DETAILS

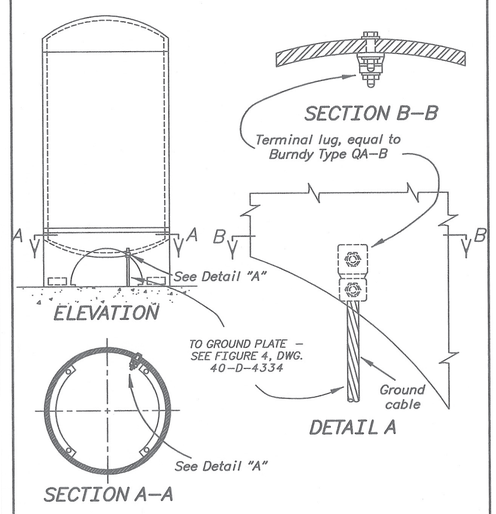

FIGURE 8

CONTROL CABLE SHIELD

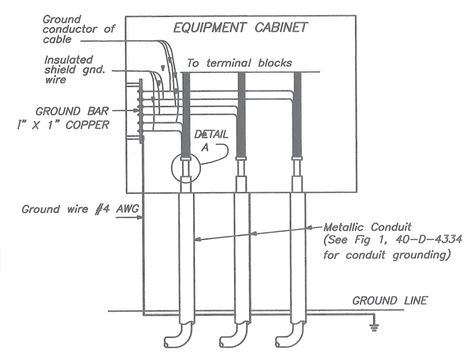

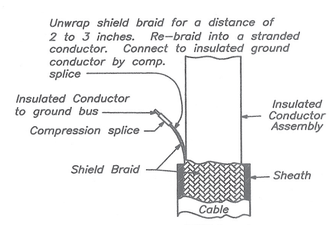

DETAIL A

LONGITUDINAL CABLE SECTION

REFERENCE DRAWINGS

ELECTRICAL INSTALLATION - TYPICAL GROUNDING DETAILS (SHT 1 OF 2) 40-D-4334

REV NO		
3	2004-07-06 D - ARG	MINOR REVISIONS; ADDED FIG.'S 2 AND 8.
3 - 10 - 00 D - L.G.		REDRAWN IN AUTOCAD R.14 FORMAT
12 - 2 -85 D - G.D.O.		REVISED TO SHOW CURRENT PRODUCTS OR PRACTICES.

THIS DRAWING SUPERSEDES DRAWING 40-D-4336 IN PART (2003-01-14); AND DRAWING 104-D-944 (2004-07-06)

ALWAYS THINK SAFETY

UNITED STATES
DEPARTMENT OF THE INTERIOR
BUREAU OF RECLAMATION

STANDARD DESIGNS

ELECTRICAL INSTALLATION

TYPICAL GROUNDING DETAILS

DRAWN R.Y.N. - S.J.S. SUBMITTED D. CLARK
TRACED J. M. H. RECOMMENDED H. H. PLUMB
CHECKED V.N.P - R.F.H. - T.J.L APPROVED L. N. McCLELLAN
ACTING CHIEF ENGINEER

DENVER, COLORADO APRIL 24, 1947 SHEET 2 OF 2

40-D-4335

CAD SYSTEM AutoCAD Rel. 16.0a
CAD FILENAME 40-D-4335.DWG
DATE AND TIME PLOTTED JUNE 30, 2004 16:31
PLOTTED BY DCRAWFORD

DEC 01 2004

FIGURE 1

GROUNDING TO FLAT SURFACE

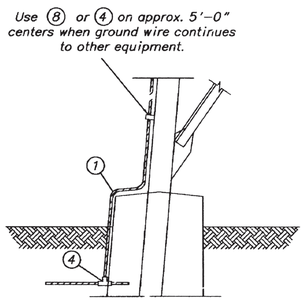

FIGURE 2

GROUNDING TO FENCE POST OR PIPE-TYPE SWITCHYARD LIGHTING POLE

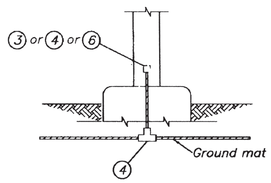

OPTION A

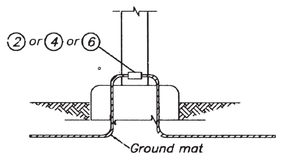

OPTION B

FIGURE 3

GROUNDING TO CABLE TRENCH OR RACK

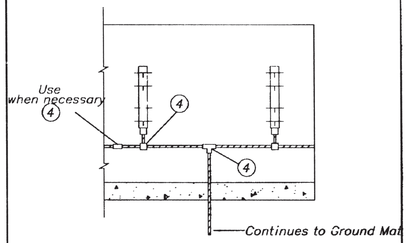

FIGURE 4

GROUNDING TO TUBULAR STEEL STRUCTURE

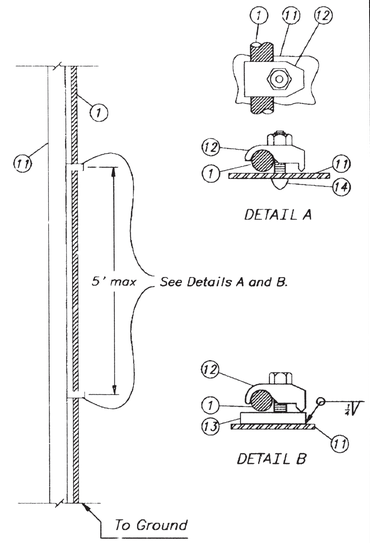

FIGURE 5

GROUND ROD CONNECTIONS

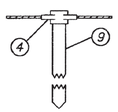

OPTION A

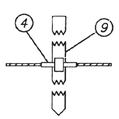

OPTION B

FIGURE 6

GROUNDING TO CABLE TUNNEL CABLE TRAYS

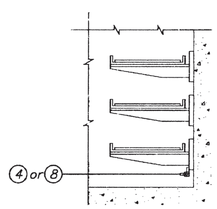

FIGURE 7

GROUNDING TO STRUCTURE BASES

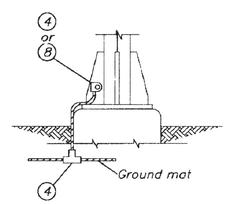

TYPICAL PIPE BUS SUPPORT OR PIPE TIE DOWN CONNECTION

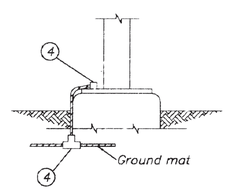

TYPICAL GROUNDING TO TUBULAR STRUCTURE

FIGURE 8

FENCE GROUNDING

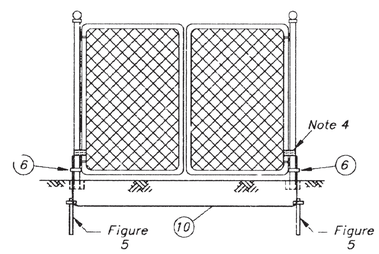

GATE AND FENCE POSTS

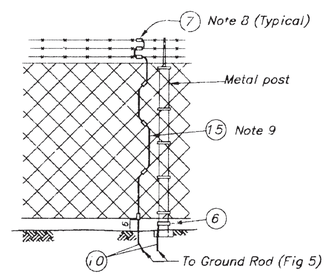

CHAIN LINK FENCING AND POST

LIST OF MATERIALS

ITEM NO.	DESCRIPTION
1	Copper cable, bare, 4/0 AWG minimum
2	Bolted ground connector similar to Burndy type GB
3	Bolted ground clamp similar to Penn-Union type GWL
4	Exothermic welded ground connector similar to Cadweld or ThermOweld
5	Bolt: 1/2" silicon-bronze with nut and lock washer. Length as required for Item 8.
6	Bolted ground connector similar to Burndy type GAR
7	Compression-type ground connector
8	Cable to flat bar connector similar to Burndy QA or GB
9	Ground rod, 10'x3/4", copper-clad steel
10	Copper-clad steel stranded cable, bare, 7 No. 5
11	Tubular steel structure
12	Bolted ground connector similar to Burndy type GBM
13	Steel plate, 1-inch thick (Notes 5, 7)
14	3/8" stud, power driven (Note 6)
15	Copper-clad steel stranded cable, bare, 7 No. 9

NOTES

1. See drawing 40-D-4334 for general notes and list of reference drawings.
2. See drawing 40-D-4335 for typical ground system symbols.
3. All ground cables to be stubbed out approx. where indicated on plan drawings and be of sufficient length to bolt to equipment.
4. Ground all metal gates or each half of all double gates to the gate post with flexible metal braid installed across gate hinges.
5. Steel plate size to be larger than projected area of clamp.
6. Power driven stud equal to Ramset Fastening System as manufactured by Illinois Tool Works, Wood Dale, IL.
7. Plate to be welded to structure and be drilled and tapped for a 3/8" US standard bolt.
8. All grounding connections shall be as close as possible to the fence post.
9. Weave ground cable thru fencing and attach to fence with at least three (3) connectors

REFERENCE DRAWINGS

TYPICAL GROUNDING DETAILS (SHT 1 OF 2) 40-D-4334
TYPICAL GROUNDING DETAILS (SHT 2 OF 2) 40-D-4335

THIS DRAWING SUPERSEDES DRAWING 40-D-6309, 2004-09-30 IN PART

REV. NO.		
4	2004-09-30 D-J.R.Z.	ADDED FIGURES 4 AND 8; RENUMBERED FIGURES ACCORDINGLY; ADDED NOTES 8 & 9; ADDED ITEMS 7 & 15.
3	2004-07-06 D-J.R.Z.	ADDED ITEMS 2 & 3 TO FIG. 2 AND GROUND CABLE SIZE (ITEM 1); REPLACED 'DETAIL' VIEWS w/ 'FIGURES'; OTHER MINOR REVISIONS.
	3-8-00 D-I.G.	REDRAWN IN AUTOCAD R.14 FORMAT
	04-20-70 D-G.W.C.	ADDED DETAIL H

ALWAYS THINK SAFETY

UNITED STATES
DEPARTMENT OF THE INTERIOR
BUREAU OF RECLAMATION
STANDARD DESIGNS

ELECTRICAL INSTALLATION

TYPICAL GROUNDING DETAILS FOR SWITCHYARDS AND SUBSTATIONS

DRAWN J.L.L. - P.J.S. CHECKED H. H. PLUMB
TRACED L.W.G. RECOMMENDED O. L. RICE
CHECKED J.A.M. - D.C.M. - M.H.K. APPROVED L. N. McCLELLAN
CHIEF ENGINEER

DENVER, COLORADO APRIL 5, 1949 SHEET 1 OF 1 40-D-4753

CAD SYSTEM AutoCAD Rel. 16.0a
CAD FILENAME 40D4753.DWG
DATE AND TIME PLOTTED DECEMBER 10, 2004 08:38
PLOTTED BY JRPATTER

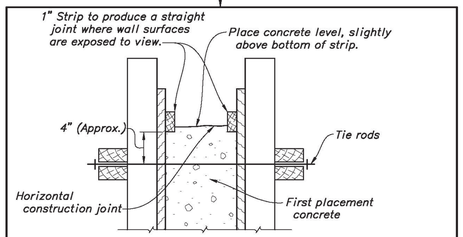

FORMS IN PLACE
FIRST PLACEMENT

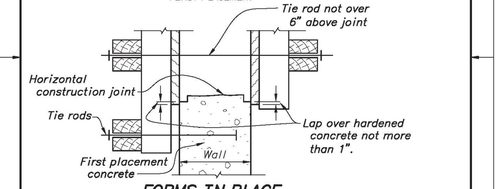

FORMS IN PLACE
SECOND PLACEMENT

NOTES

A 1" overlap produces a far tighter contact than a much larger overlap, and results in prevention of form spread with consequent offset at the joint.

DRAWING NOT TO SCALE

REV NO	DATE	DESCRIPTION
2	2006-08-10 D-LK	REDRAWN IN AUTOCAD.
3-30-05 D-KAK		REDRAWN AND DELETED V-GROOVE.

ALWAYS THINK SAFETY

UNITED STATES
DEPARTMENT OF THE INTERIOR
BUREAU OF RECLAMATION

STANDARD DESIGNS

BUILDINGS
METHOD OF BUILDING FORMS FOR SUCCESSIVE LIFTS

DESIGNED _____ TECHNICAL APPROVAL LG 7/25/06
DRAWN CJ MCLEOD SUBMITTED JR DEPTER
CHECKED KS, KVDE APPROVED SA ERICKSON
CHIEF, STRUCT. & MECH. DIVISION

AutoCAD Rel. 19.1s | 40-D-5246-RD-1.DWG

DENVER, COLORADO MAY 28, 1985 | 40-D-5246

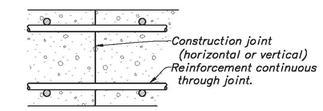

CONSTRUCTION JOINTS

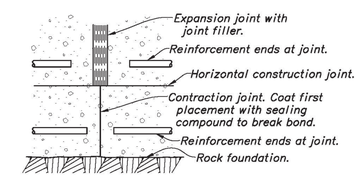

EXPANSION AND CONTRACTION JOINTS

NOTE

Construction joint keys and waterstops required if shown on construction drawings.

FORMERLY 103-D-219

2 2020-08-28 REDRAWN IN AUTOCAD.
2-11-77 DELETED "DOWN" AND REFERENCES TO SCALE.
R.J.S. 10-58

ALWAYS THINK SAFETY

UNITED STATES
DEPARTMENT OF THE INTERIOR
BUREAU OF RECLAMATION
STANDARD DESIGNS
BUILDINGS

JOINTS IN CONCRETE STRUCTURES

DESIGNED J.C.B. SUBMITTED DATE
TRACED C.A.R. RECOMMENDED C. E. BISHOP
CHECKED R.J.S.-J.E.B. APPROVED R. F. McPHERSON
CADD SERVICE NUMBER 206-10 CADD SERVICE DATE 08-28-2020
DELETED DRAWING FORMERLY 103-D-219 DELETED DRAWING 40-D-5247

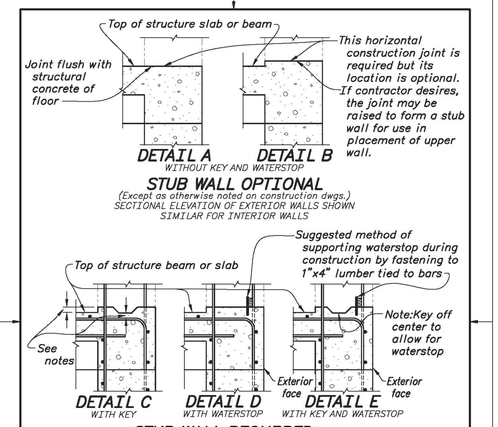
Top of structure slab or beam
Joint flush with structural concrete of floor
This horizontal construction joint is required but its location is optional. If contractor desires, the joint may be raised to form a stub wall for use in placement of upper wall.
DETAIL A
DETAIL B
WITHOUT KEY AND WATERSTOP
STUB WALL OPTIONAL
(Except as otherwise noted on construction dwgs.)
SECTIONAL ELEVATION OF EXTERIOR WALLS SHOWN
SIMILAR FOR INTERIOR WALLS
Suggested method of supporting waterstop during construction by fastening to 1"x4" lumber tied to bars
Top of structure beam or slab
Note:Key off center to allow for waterstop
See notes
Exterior face
Exterior face
DETAIL C
WITH KEY
DETAIL D
WITH WATERSTOP
DETAIL E
WITH KEY AND WATERSTOP
STUB WALL REQUIRED
SECTIONAL ELEVATION OF EXTERIOR WALLS SHOWN
NOTES
Height of stub wall shall be sufficient for bottom of key or waterstop to clear slab or beam top reinforcement by 1" min. See construction drawings for required waterstops and construction joint keys.
REV NO 2 2006-08-18 D-J.K. REDRAWN IN AUTOCAD.
2-11-71 D - H.B.R. CHANGED "SEAL" TO "WATERSTOP".
ALWAYS THINK SAFETY
UNITED STATES
DEPARTMENT OF THE INTERIOR
BUREAU OF RECLAMATION
STANDARD DESIGNS
BUILDINGS
STUB WALL CONSTRUCTION JOINTS
DRAWN H.H.R. SUBMITTED SAMUEL JUDD
TRACED K.M.M. RECOMMENDED K.E. KEMPER
CHECKED R.A.K.-H.R. APPROVED W.E. BLOMGREN
CHIEF, DEPT. DESIGNS
AutoCAD Rel. 19.1a
40-D-5248-RD-1.DWG
DENVER, COLORADO DECEMBER 4, 1950
40-D-5248

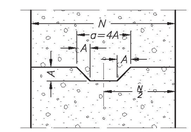

MEMBERS WITHOUT WATERSTOPS

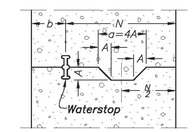

MEMBERS WITH WATERSTOPS

DIMENSION OF KEYS	
N	A
12" to 17"	1.5"
18" to 22"	2.0"
23" to 27"	2.5"
28" to 32"	3.0"
33" to 37"	3.5"
38" to 42"	4.0"
43" to 47"	4.5"
48" to 52"	5.0"
53" to 57"	5.5"
58" to 62"	6.0"
63" to 67"	6.5"
68" to 72"	7.0"
73" to 77"	7.5"

NOTES

This standard may be used for walls or slabs where shown on the drawings.
Dimension "b" varies with bar cover, bar sizes, and method of support during installation.
One or more keys may be used for members 6'-0" thick or over.
For multiple keys, use key with dimension "A" = 4 inches.

REV.	DATE	DESCRIPTION
3	2010-08-30	REDRAWN IN AUTOCAD.
2	2-11-11	
1	10-21-10	REVISED RESTRICTION ON WATERSTOP MATERIAL.
0	10-21-10	
0	2-16-1	RETRACED AND REDRAWN.

ALWAYS THINK SAFETY

UNITED STATES
DEPARTMENT OF THE INTERIOR
BUREAU OF RECLAMATION

STANDARD DESIGNS

CONSTRUCTION JOINT KEYS

DRAWN J.S. SUBMITTED DAVID JUDD
TRACED L.E.D. RECOMMENDED K. B. STEPEK
CHECKED D.A.-D.B. APPROVED K. G. BLOMBACK
CADD SYSTEM AUTOCAD 2010 CADD FILENAME 40-D-5249 CONTRACT NO. 10-1-10
DESIGN DIVISION DESIGNED K. TEST DATE 2-11-10

40-D-5249

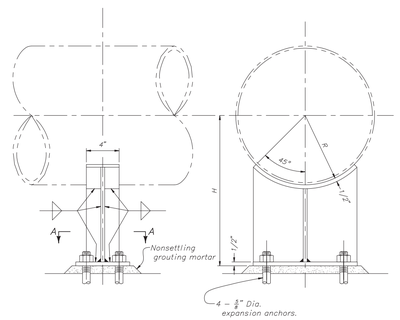

PIPE SUPPORT
TYPE A

PIPE SUPPORT DIMENSIONS

TYPE B AND TYPE C

PIPE O.D.	A	B	C	D	E	F	G	θ
2 3/8"	1/4"	1/2"	1"	1/4"	8"	4"	2"	50°
3 1/2"	1/4"	1/2"	1 1/2"	1/4"	8"	4"	2"	50°
4 1/2"	3/8"	3/4"	2"	3/8"	9"	4"	3"	40°
5 9/16"	3/8"	3/4"	2"	3/8"	9"	4"	3"	40°
6 5/8"	3/8"	3/4"	2"	3/8"	10"	6"	3"	40°
8 5/8"	1/2"	1"	2 1/2"	1/2"	10"	6"	4"	40°
10 3/4"	1/2"	1"	2 1/2"	1/2"	10"	6"	4"	35°
12 3/4"	1/2"	1"	2 1/2"	1/2"	10"	6"	4"	35°

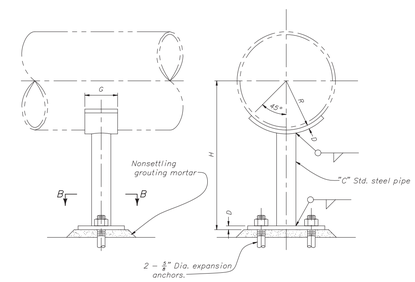

PIPE SUPPORT
TYPE B

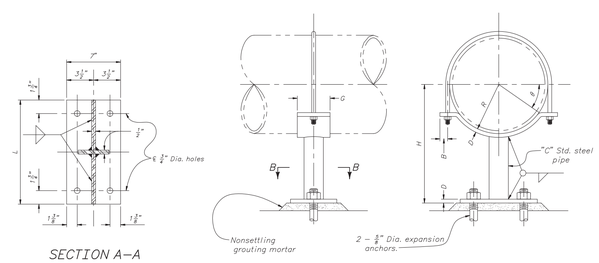

PIPE SUPPORT
TYPE C

SECTION A–A

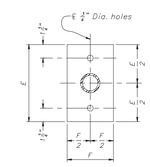

SECTION B–B

NOTES

$R = \frac{\text{Pipe O.D.}}{2}$

L=1.50R

H=Dimension as given on accompanying drawings.

Support type A for pipe 14" O.D. through 24" O.D.

Support type B & C for pipe up to and including 12 3/4" O.D.

REV NO	DATE / BY	REASON
4	2002-09-04 D.J.E.A.	REDRAWN IN AUTOCAD.
11-15-88 D.J.E.A.		CHANGED ANCHOR SIZE AND ELIMINATED SLOTTED HOLES AND WASHERS.
10-13-88 D.J.E.A.		REVISED GROUTING MORTAR AND ANCHORS.
6-15-58 D.J.E.A.		REVISED TO CORRECT TYPES B AND C FOR SMALLER SIZES.

ALWAYS THINK SAFETY

UNITED STATES
DEPARTMENT OF THE INTERIOR
BUREAU OF RECLAMATION

STANDARD DESIGN

PIPE SUPPORTS

DRAWN W.F.B. SUBMITTED PETER RIGG
TRACED M.D.B. RECOMMENDED W. T. WEBBER
CHECKED J.E.W. APPROVED W. B. REESNER
ACT ASS. DIST ENGINEER

CADD SYSTEM AUTOCAD Rev. 14.0 (LAG) Tech. | CADD FILENAME 40-D-5328.DWG | DATE AND TIME PLOTTED FEBRUARY 5, 2003, 10:38

DENVER, COLORADO NOV. 24, 1953 40-D-5328

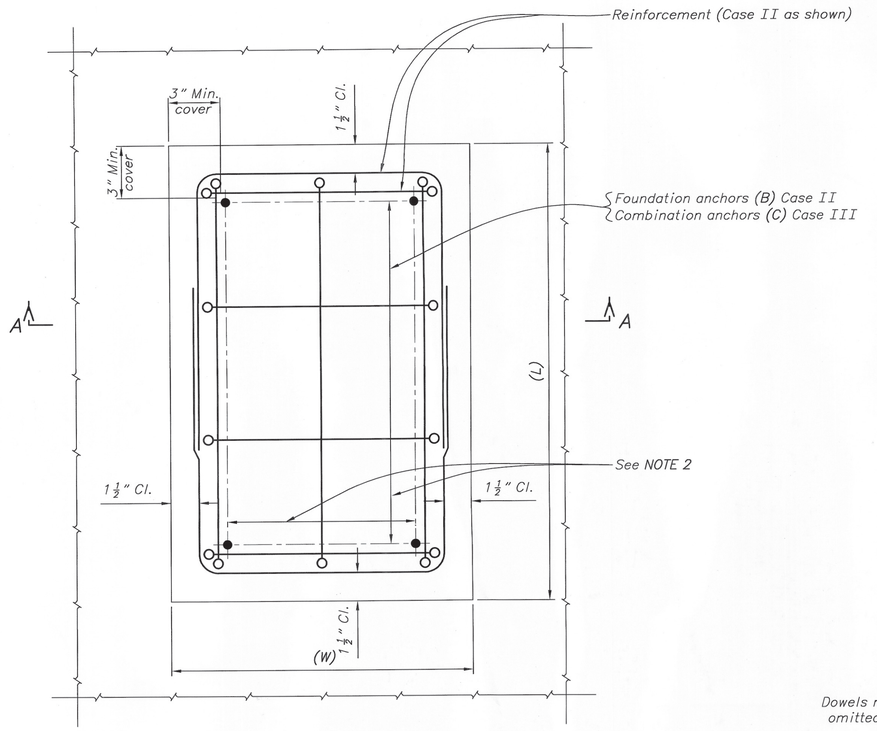

PLAN

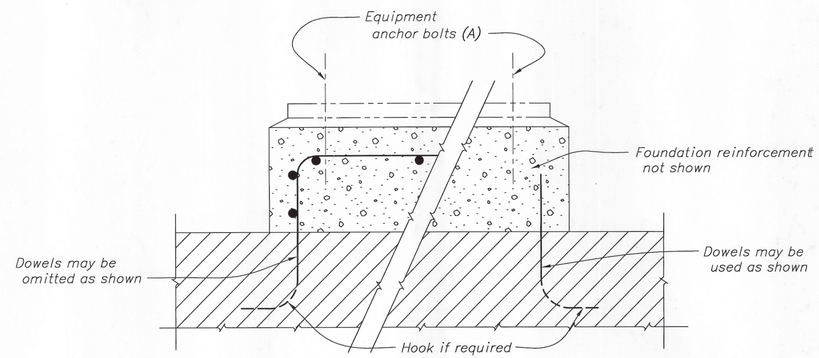

SECTION A–A (CASE I)

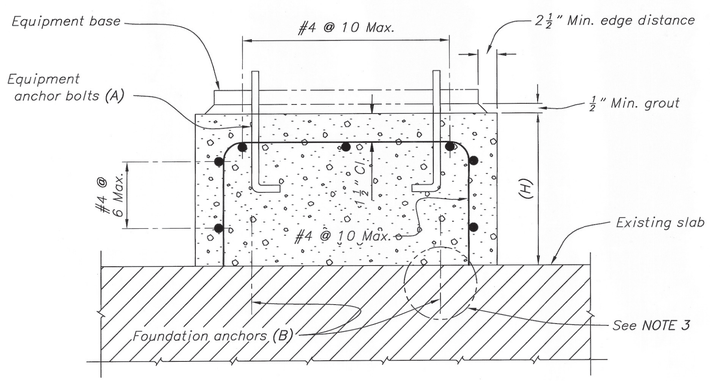

SECTION A–A (CASE II)

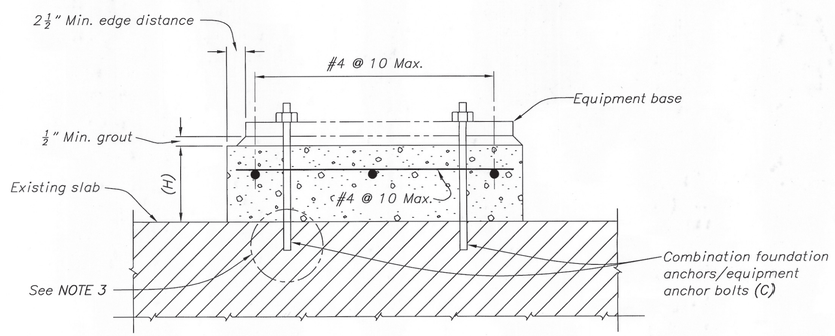

SECTION A–A (CASE III)

NOTES

For general notes, see 40-D-6263 and 7012.

Foundation sizes (L, W, H) may be shown elsewhere or establish actual dimensions to accommodate equipment furnished.

Locate equipment anchor bolts (A) and combination foundation anchors/equipment anchor bolts (C) from equipment and set them by template.

If equipment anchor bolts (A) are too long for foundation height (H) or if (H) is less than 8 inches, use combination foundation anchors/equipment anchor bolts (C); see Case III.

Roughen existing concrete under all foundations.

For foundations of larger equipment see construction drawings.

NOTE 1: Case I foundations can be used if the reinforcement is designed and positioned before the underlying concrete is placed. The final loads, location, and dimensions (L), (W), and (H) must be known for design. Design the reinforcement size, spacing, and embedment lengths in accordance with the latest edition of ACI Standard 318, Building Code Requirements for Reinforced Concrete.

NOTE 2: Size and space the foundation anchors for Case II and Case III foundations so that all loads are transferred from the foundation to the floor with a safety factor of four.

NOTE 3: Drill holes for expansion-type bolts or anchors to the diameter and depth recommended by the manufacturer.

6-10-99 D-MRO	REVISED AND UPDATED TO AUTOCADD DRAWING.
4-28-83 D-KSK	REVISED AND REDRAWN TO SHOW STATE-OF-THE-ART ANCHORAGE AND GENERAL UPDATING.

ALWAYS THINK SAFETY

UNITED STATES
DEPARTMENT OF THE INTERIOR
BUREAU OF RECLAMATION

STANDARD DESIGN

SMALL EQUIPMENT FOUNDATIONS

DESIGNED _____ TECHNICAL APPROVAL JERRY R. DEXTER
DRAWN JAMES R. VERNON SUBMITTED GAYLE A. ERICKSON
CHECKED KATHRYN S. KUGE APPROVED W.R. ANDERSON
CHIEF, STRUCT. AND ARCH. BRANCH

CADD SYSTEM	CADD FILENAME	DATE AND TIME PLOTTED
AutoCAD Rel. 15.06	40-D-5599.DWG	NOVEMBER 26, 2001 15:18
DENVER, COLORADO	APRIL 28, 1983	40-D-5599

MLEAVITT
FILE PATH: L:\Admin\Drawings - 40-D\

LINE	Identification of motor (Unit No., Item No., etc as applicable) (Note 2)						
1	Manufacturer (Nameplate)						
2	Horsepower rating (Nameplate)						
3	Time rating (Nameplate)						
4	Temperature rise of windings by resistance (Not ambient temperature)						
5	Calculated starting time of the pumping unit under specified conditions, seconds (Note 1)						
6	Rated load speed. R.P.M. (Nameplate)						
7	Number of phases (Nameplate)						
8	Armature connected (delta or wye)						
9	Voltage (Nameplate)						
10	Rated load amperes (Nameplate)						
11	Code letter for locked-rotor Kva/hp. (Nameplate)						
12	Design letter						
13	Power factor at nameplate rated load						
	Power factor at 3/4 load (Note 4)						
	Power factor at 1/2 load (Note 4)						
14	Capacitor KVAR rating to correct power factor over range of purnp (Notes 3 and 4)						
15	Corrected power factor (minimum) (Note 4)						
16	Efficiency at nameplate rated load						
	Efficiency at 3/4 load (Note 4)						
	Efficiency at 1/2 load (Note 4)						
17	Type of enclosure (open, drip-proof, TEFC)						
18	Stator insulation, class						
19	Type of stator windings (form wound or random wound)						
20	Type of bearings (ball, roller, sleeve)						
21	Net weight each motor, lbs.						
22	Motor WR^2 – ($lb-ft^2$)						

NOTES

1. Applicable only to pumping units with motors above 20 hp.
2. Provide column for each different size motor at each plant or structure. All reference to nameplates means the date shall be as it appears on the nameplate furnished.
3. Capacitor KVAR rating should be at capacitor rated voltage but capacitor must be sized for operation at motor rated voltage.
4. Applicable only to units where power factor correction is specified.

Specifications or Solication No. _____
Project _____
Name of structure _____

2 - 19 - 99 D - ZQR	REVISED AND REDRAWN INTO AUTOCAD FORMAT.
8 - 1 - 73 D - P.L.A.	GENERAL REVISIONS, RETRACED

ALWAYS THINK SAFETY

UNITED STATES
DEPARTMENT OF THE INTERIOR
BUREAU OF RECLAMATION

STANDARD DESIGNS

INDUCTION MOTORS

DESIGN AND NAMEPLATE DATA TO BE FURNISHED BY THE CONTACTOR

DESIGNED R.S.N. SUBMITTED J.V BAPTIST
TRACED L. Mc Farlane RECOMMENDED H.G. ARTHUR
CHECKED E.M.J. - P.L.A. APPROVED B.P. BELLPORT
CHIEF ENGINEER

CADD SYSTEM	CADD FILENAME	DATE AND TIME PLOTTED
AutoCAD Rel. 14.01h	40D6032.DWG	APRIL 7, 1999 14:02

DENVER, COLORADO MARCH 18, 1965 40-D-6032

LGAMUCIE

CLASS	150 LB.		300 LB.	
I.D.	20"	24"	20"	24"
B.C.	25"	29 1/2"	27"	32"
O.D.	27 1/2"	32"	30 1/2"	36"
A	23"	27 1/2"	23"	27 1/2"
B	19 1/2"	23 1/2"	19 1/2"	23 1/2"
W	1'-3"	1'-5"	1'-5"	1'-7 1/2"
C	36"	40"	36"	40"
T	11 1/2"	12"	12"	12 1/2"
N	1/2"	5/8"	5/8"	5/8"
Gaskets	20" I.D. x 23 1/2" O.D. x 1/16" Thick	24" I.D. x 28 1/2" O.D. x 1/16" Thick	20" I.D. x 25 1/2" O.D. x 1/16" Thick	24" I.D. x 30 1/2" O.D. x 1/16" Thick
Bolts (Type A and B)	20-1 1/8" x 4 1/2"	20-1 1/8" x 5 1/2"	24-1 1/8" x 6 1/2"	24-1 1/8" x 7 1/2"
Studs (Type C)	20-1 1/8" x 4 1/2"	20-1 1/8" x 5 1/2"	24-1 1/8" x 6 1/2"	24-1 1/8" x 7 1/2"

NOTES

Nozzles shall be shaped to fit the specified pipe or vessel diameter.

Type A manholes shall conform to the dimensions and details indicated hereon.

Type B manholes shall be similar to Type A except that the hinges shall be omitted.

Type C manholes shall be similar to Type A except that the hinges shall be omitted and the nozzles shall be drilled and tapped for studs.

Bolt holes shall be drilled and tapped as required for bolts or studs furnished.

S = Shell thickness of specified pipe or vessel.

S Function dimensions that do not yield 1/16" increments shall be increased to the next larger 1/16" increment.

Gaskets shall be cloth inserted rubber.

See specifications drawing for orientation of hinges.

8-6-59 D. N.C.P.	ADDED TELLTALE HOLE.

ALWAYS THINK SAFETY

UNITED STATES
DEPARTMENT OF THE INTERIOR
BUREAU OF RECLAMATION
STANDARD DESIGNS

MANHOLES
CLASS 150 LB. AND 300 LB.
PLATE STEEL

DRAWN N.R.P. SUBMITTED
TRACED R.A.D. RECOMMENDED
CHECKED APPROVED
DENVER, COLORADO, DEC. 19, 1957 — 40-D-6137

SAMPLE NAMEPLATES

STRAINER DRAIN

EXTENDED TYPE

STRAINER
DRAIN

COMPACT TYPE

FIRE PROTECTION
WATER SUPPLY
CAUTION
2 1/2" OUTLET FOR FIRE
DEPARTMENT USE ONLY

INSCRIPTION AND CLOSE RANGE
INFORMATIONAL LETTERING

GOTHIC LETTERING CHART

NORMAL (Avg. width .271")
1/4" ABCDEFGHIJKLMN
ABCDEFGHIJKLMNOP
CONDENSED (Avg. width .234")

NORMAL (Avg. width .203")
3/16" ABCDEFGHIJKLMNOPQR
ABCDEFGHIJKLMNOPQRSTU
CONDENSED (Avg. width .175")

NORMAL (Avg. width .167")
5/32" ABCDEFGHIJKLMNOPQRSTUV
ABCDEFGHIJKLMNOPQRSTUVWXYZ
CONDENSED (Avg. width .140")

NORMAL (Avg. width .135")
1/8" ABCDEFGHIJKLMNOPQRSTUVWXYZ
ABCDEFGHIJKLMNOPQRSTUVWXYZ
CONDENSED (Avg. width .116")

NORMAL (Avg. width .103")
3/32" ABCDEFGHIJKLMNOPQRSTUVWXYZ
ABCDEFGHIJKLMNOPQRSTUVWXYZ
CONDENSED (Avg. width .086")

*Average widths listed include spacing between letters.

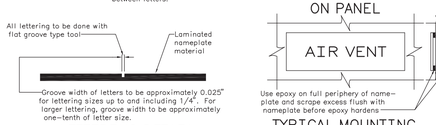

LETTERING DETAIL

SIZES AND LETTER SPACING OF NAMEPLATES

FOR DIMENSIONS SEE TABLES 1 & 2

TABLE 1
WIDTH
TABLE FOR ALL LETTERING THE SAME SIZE

GOTHIC LETTER SIZE	NO. OF LINES 1 W	1 B	2 W	2 S	2 B	3 W	3 S	3 B
1/4	1.00	.375	1.25	.15	.30	1.75	.15	.35
3/16	.75	.28	1.00	.11	.26	1.25	.11	.23
5/32	.50	.17	.75	.08	.18	1.00	.09	.18
1/8	.50	.19	.75	.08	.21	1.00	.08	.23
3/32	.50	.20	.50	.07	.12	.75	.08	.15

Dim. in inches

For other lettering sizes, more than three lines, or various size lettering on same nameplate, arrange width as follows:
Space(S)=Average of letter sizes on each side of space x 0.6.
Border(B)=Largest lettering size on nameplate x 1.2 + half of odd amounts to give total width(W) to even 1/4".

TABLE 3
STANDARD NAMEPLATES
FOR ELECTRICAL EQUIPMENT ONLY

NAMEPLATE SIZE NO.	NAMEPLATE DIMENSIONS L	W	B	LETTERING SIZE
1	1 1/8	7/16	1/16	3/32
2	1 1/2	9/16	1/8	3/32
3	1 3/4	5/8	1/8	1/8
4	2 1/4	3/4	1/8	3/16
5	3	1	7/32	3/16
6	4	1 1/4	1/4	1/4
7	6	1 3/4	1/4	1/2

Above nameplates shall be used for electrical equipment unless otherwise specified.

Dim. in inches

TABLE 2
LENGTH

NO. OF LETTERS AND SPACES	LETTERING SIZE ON LONGEST LINE (NORM=NORMAL; COND=CONDENSED) 1/4 NORM	1/4 COND	3/16 NORM	3/16 COND	5/32 NORM	5/32 COND	1/8 NORM	1/8 COND	3/32 NORM	3/32 COND
1										
2										
3	3									
4		3								
5			3							
6										
7				3						
8	3 1/2									
9					3					
10	4									
11		3 1/2								
12	4 1/2					3				
13			3 1/2							
14	5						3			
15		4 1/2		3 1/2						
16	5 1/2		4							
17					3 1/2					
18	6							3		
19		5 1/2		4						
20	6 1/2		5		4					
21						3 1/2				
22	7								3	
23		6		4 1/2						
24	7 1/2		5		4					
25		6 1/2								
26	8									
		7		5		4 1/2				
	8 1/2		5 1/2		4 1/2		4			
		7 1/2		6		5		4 1/2		
			6 1/2		5 1/2		5		4	
				6 1/2		6		5		3 1/2

Dim. in inches

For other lettering sizes or longer nameplates, use the following formula:
L = A(N+n) + 2M (Nameplate length cut to nearest 1/2").
L – Length of nameplate.
A – Average letter width on longest line.
N – Number of letters on longest line.
n – Number of spaces on longest line
M – Margin=Average letter width plus 5/8".

MOUNTING OF NAMEPLATES

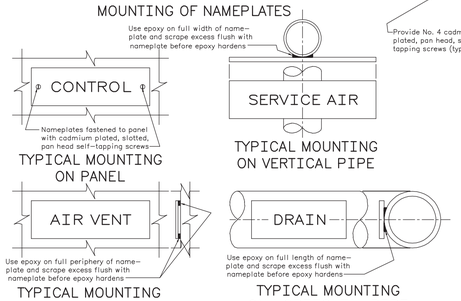

TYPICAL MOUNTING ON PANEL

TYPICAL MOUNTING ON VERTICAL PIPE

TYPICAL MOUNTING ON CONCRETE WALL

TYPICAL MOUNTING ON HORIZONTAL PIPE

DRILLING OF NAMEPLATES
(For panel mounting only)

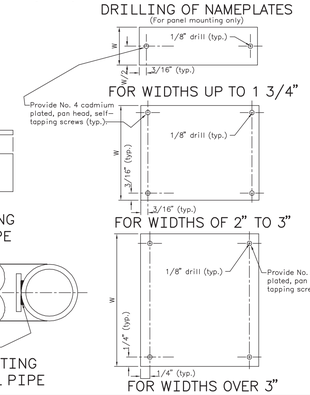

NAMEPLATE MATERIAL

NOTE – All nameplate material shall be suitable for exposure to direct sunlight without detrimental fading.

TYPE A – Material shall be laminated phenolic resin sheets 1/16" or 3/32" thick (as specified) opaque black surface, white layer adjacent to surface layer, buffed or satin finish. Sheets to be cut to size with square edges. Engraving to cut through black surface to white layer. Shall conform to Military Specification MIL – P – 78A and Federal Specification L-P-509a.

TYPE B – Same as Type A except Chinese red surface or equivalent.

TYPE C – Same as Type A except 1/8", 3/16", or 1/4" thick (as specified).

TYPE D – Same as Type A except Chinese red surface or equivalent and 1/8", 3/16", or 1/4" thick (as specified).

NAMEPLATE USES

TYPE A – For panel mounting with self-tapping screws. For concrete wall or other flat mounting to identify valves, equipment, etc. Mount with epoxy cement–indoors or outdoors.

TYPE B – Red nameplates are restricted to uses such as fire protection equipment, warning inscriptions, and emergency devices. Methods of mounting shall be the same as for Type A.

TYPE C – For mounting on non–flat surface with epoxy cement.

TYPE D – Restricted to uses such as fire protection, equipment warning inscriptions, and emergency devices. For mounting on non–flat surfaces with epoxy cement.

LETTERING

Use normal or condensed letter types shown on the Gothic Lettering Chart. The normal size of lettering shall be not less than 3/16" high (1/4" preferred), except that 5/32" and smaller may be used for information and instructions that may be read at close range. Larger size lettering may be specified for out–of–doors installations or where necessary.

NOTES

This drawing supersedes Drawings No. 40–D–5173, 106–D–341, and 106–D–342.

This drawing and Drawings No. 40–D–6124, –6130, and –6187 supersede Drawing No. 40–D–2567.

Table 3 for ELECTRICAL EQUIPMENT ONLY, Tables 1 and 2 for all other equipment.

10 – 13 – 00 D – LG	Redrawn in AutoCAD
12 – 17 – 79 D – LK	Redrawn
11 – 8 – 70 D – DAM	Add Table 3 and Note

ALWAYS THINK SAFETY

UNITED STATES
DEPARTMENT OF THE INTERIOR
BUREAU OF RECLAMATION

STANDARD DESIGNS

STANDARD NAMEPLATES

DESIGNED D.A.B. TECHNICAL APPROVAL C.G.BROWN
DRAWN J.M.C. SUBMITTED J.D.K.R. JR. CHIEF
CHECKED D.M.B.–S.K.K.–E.M.J. APPROVED R.P.DeLINDE CHIEF ENGINEER

CADD SYSTEM	CADD FILENAME	DATE AND TIME PLOTTED
AutoCAD Release 12 –12–c	40D6234.DWG	NOVEMBER 29, 1994 12:28

DENVER, COLORADO MAY 1970 40–D–6234

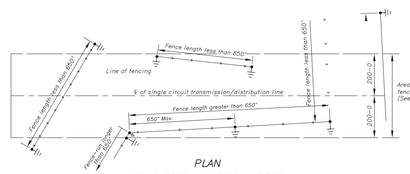

PLAN

TRANSMISSION LINE ROW – TYPICAL

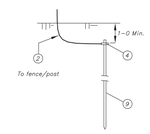

DETAIL 'A'

GROUND ROD INSTALLATION

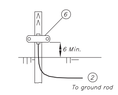

DETAIL 'B'

METAL FENCE POST

(NOTE 14)

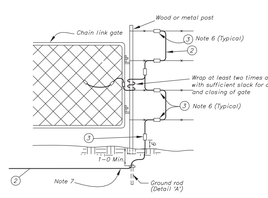

BARBED WIRE FENCING W/ CHAIN LINK GATE

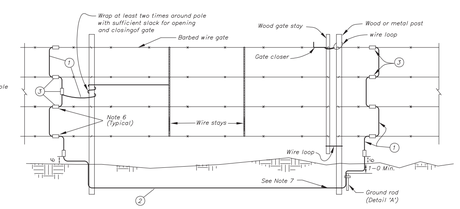

BARBED WIRE FENCING AND BARBED WIRE GATE

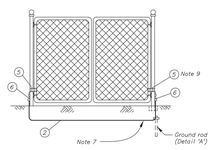

CHAIN LINK FENCE GATE

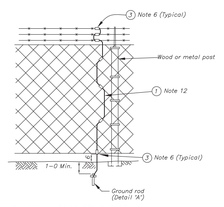

CHAIN LINK FENCING

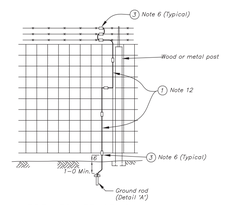

WIRE MESH FENCING

LIST OF MATERIALS

ITEM NO.	DESCRIPTION
1	Copper–clad steel stranded cable, 7 No. 9 (11/32")
2	Copper–clad steel stranded cable, 7 No. 5 (9/16")
3	Compression–type ground connector
4	Exothermic welded ground connector similar to Cadweld or ThermOweld
5	Flexible copper braid
6	Bolted ground connector similar to Burndy type GAR or GA–H.
7	
8	
9	Ground rod, 10'×3/4"; copper–clad steel

SYMBOLS

⏚ Indicates ground rod installation.

• Indicates ground connection.

NOTES

1. Ground all fencing located within 200 feet of transmission line center line as shown in plan. If fencing is interrupted by a gate, ground fencing and gate as shown.
2. For fences less than 650 feet, provide a ground at each end of the fence.
3. For fences longer than 650 feet, ground each end of fence and provide a fence ground where the fence–run crosses the area of required grounding.
4. The maximum interval between ground connections is 650 ft.
5. Non–continuous intervals of fence run shall be grounded at each end of the continuous interval. Ground wire jumpers 11/32–inch (7 No. 9) may be provided.
6. All grounding connections shall be as close as possible to the fence post.
7. Where a ground rod is located near a gate or a gate post, the fence shall be grounded around the gate opening to the fence on the opposite side with a 9/16" (7 No. 5) copper–clad steel stranded ground cable.
8. Fence grounding shall not be connected to the existing transmission line grounding system.
9. Ground all gates or each half of all double gates to the gate post with flexible braid.
10. Ground cable sizes listed are minimum size allowable.
11. This drawing does not apply to switchyards and substations.
12. Weave ground cable thru fencing and attach to fence with at least three (3) connectors.
13. All ground connectors shall be UL listed.
14. Ground all metal corner, end, and gate posts directly to ground rod.

REV NO		
5	2004–09–30 D – J. K. Z.	REVISED TITLEBLOCK; ADDED REF. MATERIAL LIST AND ITEMS; SPLIT "DETAIL 'A' INTO TWO DETAILS; DELETED "BARBED WIRE FENCING AND BARBED WIRE GATE" FROM "BARBED WIRE & WOOD POST CHAIN LINK FENCING"; ITEMS; ADDED NOTES 11–14.
	2–7–96 D – T. L. K.	REDRAWN ON AUTOCAD REL. 12 REVISED TITLE BLOCK , AND MADE MINOR REVISIONS
	1–18–90 D – M. A. M.	AS BUILT BY 330, LTR. 5–31–89
	6–6–83 D – D. A. C.	REVISED TITLE BLOCK
	3–31–81 D – D. A. C.	ADDED NOTE 11

ALWAYS THINK SAFETY

UNITED STATES
DEPARTMENT OF THE INTERIOR
BUREAU OF RECLAMATION
STANDARD DESIGNS

TRANSMISSION LINES

FENCING WITHIN RIGHT–OF–WAY
TYPICAL GROUNDING DETAILS

DESIGNED J. EUGENE A. MOISEY — TECHNICAL APPROVAL R. R. FILLENBERG
DRAWN J. VEZSOM — SUBMITTED E. M. TOMSIC
CHECKED D. GREEN J.B.K.YRMAYRZIK — APPROVED Wm. R. GROSECLOSE, ACTING DIRECTOR OF DESIGN AND CONSTRUCTION

DENVER, COLORADO — SHEET 1 OF 1 — JULY 19, 1977 — 40–D–6376

CAD SYSTEM
AutoCAD Rel. 12.0a
AutoLISP Rel. 12.0
DWG NAME: 40D6376.DWG
DATE AND TIME PLOTTED:
Jul 19, 2004 - 08:07:00.00
PLOTTED BY
AUTODESK
DESIGN CENTER

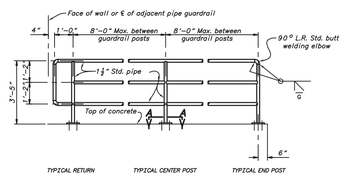

TOP MOUNTED PIPE GUARDRAIL

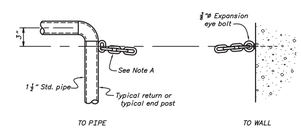

TYPICAL CHAIN DETAILS AS REQUIRED

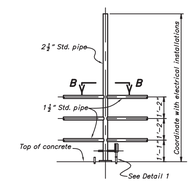

TYPICAL LIGHT POST

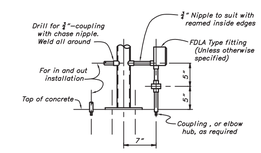

DETAIL 1

Note A: ⅜"ø Galvanized chain with maximum sag of 2-inches. Provide "S" hook and heavy duty swivel snap at one end. Weld single chain link to opposite end.

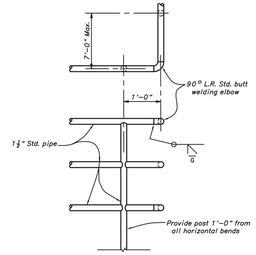

TYPICAL GUARDRAIL HORIZONTAL BEND

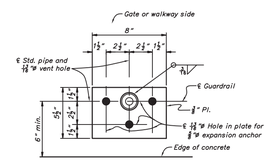

SECTION A-A

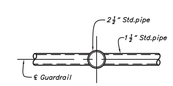

SECTION B-B

NOTES

Not all information shown on this drawing may be needed for every job. Use information on this drawing as required.
Galvanize all ferrous metalwork after fabrication. Provide vent holes as required in bottom of pipe.
All material is steel unless otherwise noted.
Splice guardrail as required with splice locks. Provide splice lock suitable for expansion joint at 50 foot centers maximum and at expansion joints in concrete.
Contractor determines guardrail lengths based on dimensions of structures. See structure drawings for location and extent of guardrails.
Grind all welds smooth.
Details, welds, and other connections shown are typical for all similar conditions.

9-17-02	ADDED ANCHOR TO SECTION A-A; CHANGED GUARDRAIL HEIGHT FROM 3'-4" TO 3'-5".
2-: W.R.O.	

ALWAYS THINK **SAFETY**

UNITED STATES
DEPARTMENT OF THE INTERIOR
BUREAU OF RECLAMATION

STANDARD DESIGN

MISCELLANEOUS METALWORK

TOP MOUNTED PIPE GUARDRAILS

DESIGNED T.E. SADOSKY TECHNICAL APPROVAL T.C. CRAMER
DRAWN T.E. SADOSKY SUBMITTED JAMES R. HILL
CHECKED T.C. CRAMER/ JSP APPROVED JOHN D. SWART
CHIEF, DESIGN DIVISION

CONFORMS:	PROJECT ENGINEER:	DESIGN CONTROL DIVISION:
A. MARCUS-FINK	J. STRAUSS	WILLIAM J. POST 1994
CHIEF, DESIGN	JANUARY 8, 1993	40-D-6592

Note A: 7 inches unless noted otherwise on structure drawing.

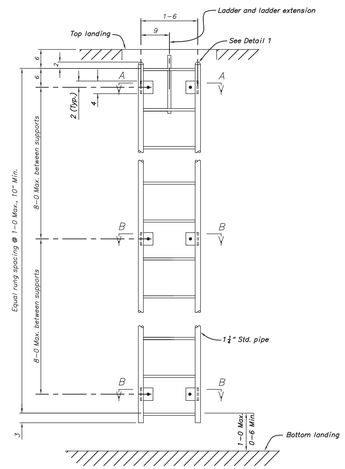

LADDER – TYPE 2

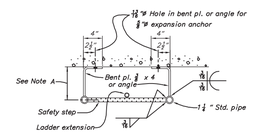

SECTION A–A

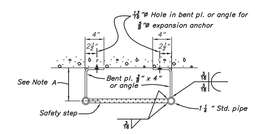

SECTION B–B

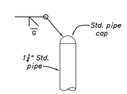

DETAIL 1

NOTES

All material is steel unless otherwise noted.
Details, welds and other connections shown are typical fo all similar conditions.
Dimensions shown are typical for similar details.
Galvanize all ferrous metalwork after fabrication. Provide vent holes as required.
Contractor determines length of ladders and rung spacings based of elevation difference. See structure drawings.
Grind all welds smooth.

ALWAYS THINK SAFETY

UNITED STATES
DEPARTMENT OF THE INTERIOR
BUREAU OF RECLAMATION

STANDARD DESIGN

MISCELLANEOUS METALWORK

LADDER – TYPE 2

DESIGN A.M. TUCKER TECH. APPR. T.C. GRABER
DRAWN A.M. TUCKER SUBMITTED JAMES B. HILL
CHECKED T.E. SADOWSKI APPROVED JOHN D. DAVIS
CHIEF, DIVISION OF ENGINEERING SERVICES

CHIEF DIVISION	SCALE / FILENAME	DATE / SYSTEM / SHEETSIZE
Publication No. 18.03	40-D-6601.DWG	DECEMBER 20, 2001 11:29
DENVER, COLORADO	JANUARY 6, 1993	40-D-6601

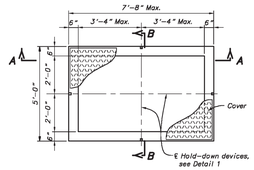

PLAN

PB1 _ _ _ PULLBOX, TYPE I

For location and box size, see electrical drawing

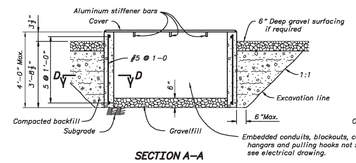

SECTION A–A

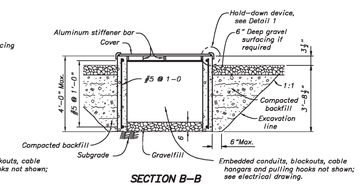

SECTION B–B

Quantities based on maximum dimensions shown:
Excavation (common) 16 yd.^{3}
Concrete 1.7 yd^3
Reinforcement bars 220 lbs.
Compacted backfill 11 yd^3
Compacted gravelfill 0.5 yd^3

DESIGN LOADS

Pullbox concrete – Lateral earth pressures (equivalent fluid pressure) of 80 psi per foot of depth with a 2 ft. surcharge to account for adjacent wheel loads.
Pulling eye and anchor – 4,000 lbs. tension working capacity.
Lifting inserts – Designed in accordance with loads required to handle and install the pullbox.

GENERAL NOTES

Concrete structural design is based on concrete with a compressive strength of 4,000 psi at 28 days and reinforcement with a minimum yield strength of 60,000 psi.

NOTES

Minimum clear space inside pullbox is 3'-0" x 3'-0".
For pullbox dimensions, embeded conduit, blockouts, and pulling hook locations, see electrical drawings.
All metalwork is steel unless otherwise noted.
Grind smooth all burred edges of cover.
Aluminum in contact with concrete shall be coated in accordance with specifications paragraphs.
Cut slope for common excavation may require flatter slopes depending on soil conditions. Cut slopes in rock will typically be more vertical.

REFERENCE DRAWINGS

GENERAL CONCRETE OUTLINE NOTES _ _ _ _ _ _ _ _ 40-D-7012
GENERAL NOTES AND MINIMUM REQUIREMENTS
FOR DETAILING REINFORCEMENT _ _ _ _ _ _ 40-D-6263

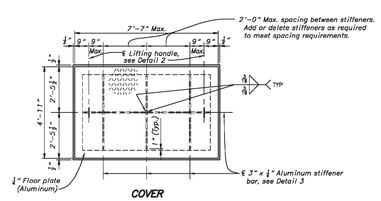

COVER

Live Load=100 LBS/SQ. FT.

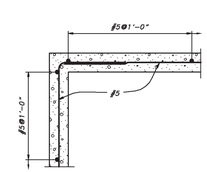

SECTION D–D

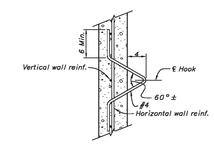

PULLING HOOK

PROVIDE 5" MINIMUM CLEARANCE FROM CENTERLINE OF HOOK TO EDGE OF CONCRETE

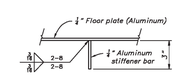

DETAIL 3

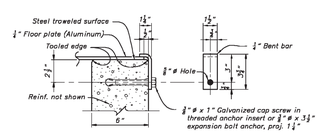

DETAIL 1

HOLD-DOWN DEVICE
GALVANIZE BARS AFTER FABRICATION

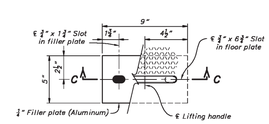

DETAIL 2

LIFTING HANDLE

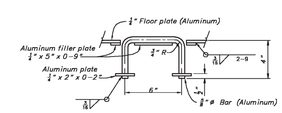

SECTION C–C

ALWAYS THINK **SAFETY**

UNITED STATES
DEPARTMENT OF THE INTERIOR
BUREAU OF RECLAMATION
STANDARD DESIGN

MISCELLANEOUS METALWORK
CONCRETE STRUCTURES
PULLBOXES

OUTLINE AND REINFORCEMENT DESIGN

DESIGNED _ S. E. SHERMAN _ _ _ _ _ TECH. APPR. _ B. K. OOFLEN _ _ _ _ _ _ _ _
DRAWN _ DL BURDINE _ _ _ _ _ _ _ _ _ _ _ _ _ _ _ _
CHECKED _ B. K. OOFLEN _ _ _ _ _ _ _ _ APPROVED _ M. R. OTHEA _ _ _ _ _ _ _ _

CADD STATUS BUDGET No. 1A.G1 DENVER, COLORADO	CADD FILENAME 40D6743.DGN FEBRUARY 2, 1993	CONTROLLING DOCUMENTS, DRAW. 40-D-6743 SHEET 1 OF 1< SPECS. 1-1810-2-2-2-2-2

40-D-6743

40-D-7016

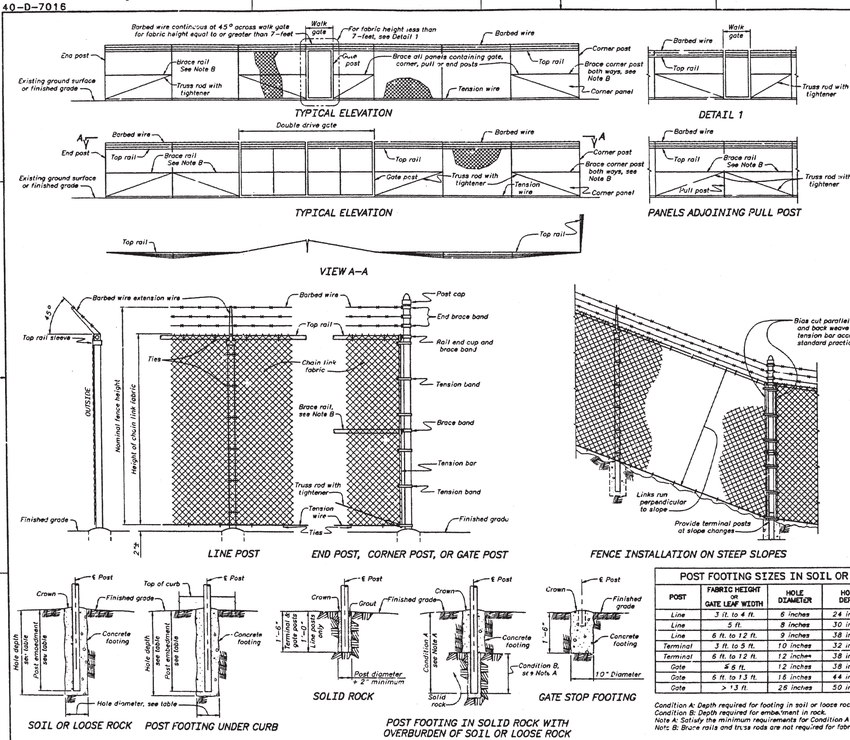

POST FOOTING SIZES IN SOIL OR LOOSE ROCK				
POST	FABRIC HEIGHT or GATE LEAF WIDTH	HOLE DIAMETER	HOLE DEPTH	POST EMBEDMENT
Line	3 ft. to 4 ft.	6 inches	24 inches	22 inches
Line	5 ft.	8 inches	30 inches	28 inches
Line	6 ft. to 12 ft.	9 inches	38 inches	36 inches
Terminal	3 ft. to 5 ft.	10 inches	32 inches	30 inches
Terminal	6 ft. to 12 ft.	12 inches	38 inches	36 inches
Gate	5 ft.	12 inches	38 inches	36 inches
Gate	6 ft. to 13 ft.	16 inches	44 inches	42 inches
Gate	> 13 ft.	26 inches	50 inches	48 inches

Condition A: Depth required for footing in soil or loose rock.
Condition B: Depth required for embedment in rock.
Note A: Satisfy the minimum requirements for Condition A or Condition B.
Note B: Brace rails and truss rods are not required for fabric height of 6 feet or less.

NOTES

See specific site plan for overall fence dimensions and size, location and swing of gates.

Install pull posts at the end of each run, at maximum intervals of 500 feet, and at vertical and horizontal changes in alignment greater than 30 degrees.

Weld all joints between tubular gate frame members or use heavy fittings to provide rigid and watertight connections.

Gate dimensions are face to face of gate posts.

Provide latches, stops and keepers for all gates as specified.

End post, corner posts, and pull posts, are designated as terminal posts.

See site plans for curb details and locations where curb is required.

Chain link fabric shall be attached to fence framework in accordance with the Chain Link Fence Manufacturer's Institute (CLFMI) Product Manual.

Chain link fences are 6 foot high fabric unless otherwise noted on specific site plans.

ALWAYS THINK SAFETY

UNITED STATES
DEPARTMENT OF THE INTERIOR
BUREAU OF RECLAMATION
STANDARD DESIGN

CHAIN LINK FENCING
CHAIN LINK FENCING REQUIREMENTS
SOIL INSTALLATION

DESIGN — G.E. SANDERS — TECH. APPR. T.E. Anderson
DRAWN — D. BURTON
CHECKED — T.E. SANDERS — APPROVED. [illegible]
CADD SYSTEM — MICROSTATION — DATE — 10-20-94
DENVER, COLORADO — 40-D-7016

K

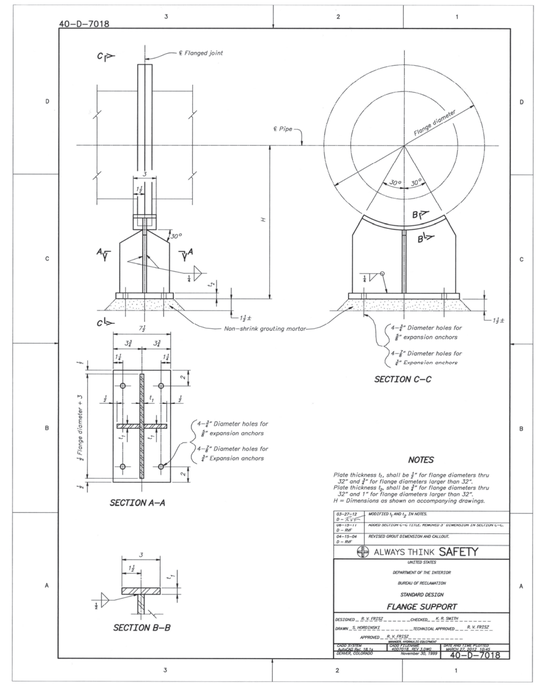
40-D-7018
℄ Flanged joint
℄ Pipe
Flange diameter
30°
H
Non-shrink grouting mortar
4-3/4" Diameter holes for 3/8" expansion anchors
4-3/4" Diameter holes for 3/8" Expansion anchors
SECTION C-C
SECTION A-A
SECTION B-B
NOTES
Plate thickness t_1 shall be 1/2" for flange diameters thru 32" and 3/4" for flange diameters larger than 32".
Plate thickness t_2 shall be 3/4" for flange diameters thru 32" and 1" for flange diameters larger than 32".
H = Dimensions as shown on accompanying drawings.
ALWAYS THINK SAFETY
UNITED STATES
DEPARTMENT OF THE INTERIOR
BUREAU OF RECLAMATION
STANDARD DESIGN
FLANGE SUPPORT
40-D-7018

Released

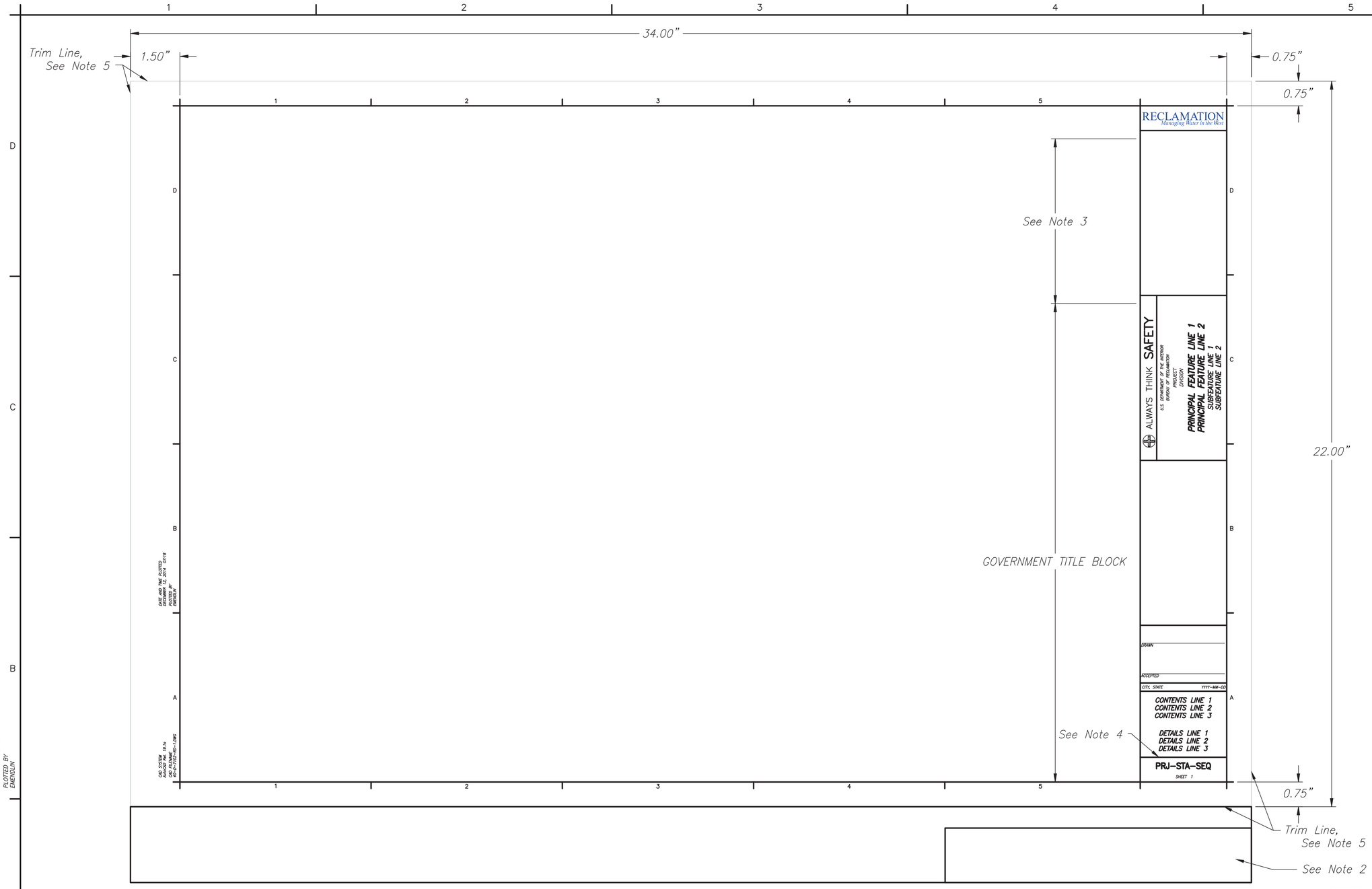

DRAWING BORDER

ALWAYS THINK SAFETY

U.S. DEPARTMENT OF THE INTERIOR
BUREAU OF RECLAMATION
YAKIMA PROJECT
KENNEWICK DIVISION

CHANDLER PUMPING PLANT

SWITCHYARD

SAMPLE TITLE

MANUFACTURER OR CONTRACTOR
DRAWN

ACCEPTED

SAMPLE SIGNATURE LINES

NOTES

1. Government will provide contractor with an electronic AutoCAD template to be used by manufacturer for submittal of manufacturer's/contractors drawing in Government format.
2. The manufacturer's title block and drawing revisions as a result of the submittal process, may be located anywhere outside of the trim lines. The location shown on this drawing is the Government's preferred area.
3. The manufacturer shall show the Government solicitation/specification number, the manufacturer's name, drawing and sheet number in this area.
4. Government drawing number(s) will be issued at the end of the submittal process and drawing will be entered into the Government's electronic drawing system by the Government.
5. Trim lines shall be shown on all submitted drawings.

RECLAMATION
Managing Water in the West

ALWAYS THINK SAFETY
U.S. DEPARTMENT OF THE INTERIOR
BUREAU OF RECLAMATION
STANDARD DRAWINGS

STANDARD AND TYPICAL DESIGNS

GOVERNMENT DRAWING FORMAT

REV NO		
2	2015-03-25	D UPDATED TITLE BLOCK AND SIGNATURE LINES
1	2014-12-17	D UPDATED TITLE BLOCK AND SIGNATURE LINES
	Barthel, Rodney J P.E.	
	E. MENDLIN	

S. NITA
DESIGNED
S. NITA
DRAWN
D. CRAWFORD
CHECKED
R. BARTHEL, P.E.
TECH. APPR.
R. W. LAFOND, P.E.
APPROVED
ADMIN APPROVAL –

DENVER, CO

DRAWING BORDER, SAMPLE TITLE BLOCK, AND SIGNATURE LINES

40-D-7102

SHEET 1

Released

ELECTRICAL EQUIPMENT SUPPORT, TYPE I
(Est. Wt. 135 lbs.)

ALTERNATE ANCHORAGE DETAIL

VIEW A–A

SECTION B–B
BASE PLATE DETAIL

VIEW C–C

VIEW D–D

DESIGN CRITERIA

Electrical equipment support is designed to withstand a three-second gust basic wind speed of 90 mph in accordance with ASCE 7-05. It is assumed that no electrical cabinets will be installed in lower portion of frame.

GENERAL NOTES

ASCE denotes American Society of Civil Engineers.

ASTM denotes American Society for Testing and Materials.

AWS denotes American Welding Society.

COR denotes Contracting Officer's Representative.

Max. denotes maximum.

Min. denotes minimum.

Pl. denotes plate.

TOC denotes top of concrete.

Typ. denotes typical.

All welds, sections and details are typical for all similar conditions.

Electro-galvanized finish combination channels.

Unless noted otherwise, galvanize base plate and plates after fabrication per ASTM A385.

Unless noted otherwise, galvanize hardware per ASTM A123.

Metal framing combination channels shall be as manufactured by Globe Strut, United Gypsum Corporation, 101 South Wacker Drive, Chicago, IL 60606; Unistrut Corporation, 35660 Clinton Street, Wayne, MI 48184; or Cooper B-Line, 509 West Monroe Street, Highland, IL 62249.

Combination Channels: Globe Strut No. G7612A, B-Line B12A, or Unistrut P5501; or equal, having the following essential characteristics: No. 12 gauge steel and channel 5/8-inch wide by 15/16-inch deep with 1/2-inch openings.

Connection Plates:
With five holes per Globe Strut G2057, B-Line B532, Unistrut P1726; or equal.
With seven holes per Globe Strut G2068, B-Line B334, Unistrut P1950; or equal.

Connection hardware shall be suitable for combination channel strut attachments.

Fabricated Metalwork:
Plates and bars..... ASTM A36

Length of bolt threads per ASME B18.2.1 and thread class 2 free-fit, American National coarse-thread series.

Unless noted otherwise, make all welds continuous and in the shop.

Start and stop all welds at center of member or tubing.

Unless noted otherwise, fabricator shall determine edge preparation and root opening for groove welds. Shop detail drawing shall show edge preparation.

Arc-Welding Electrodes: Filler metal and required shielding gases or fluxes shall be per AWS D1.1 with filler metal for steel having a minimum tensile strength of 70,000 psi.

Unless noted otherwise, all bolted connection bolt holes are standard 1/16" oversize.

"Y" dimensions are the responsibility of the Contractor and are based on the electrical cabinet furnished.

NOTES

1. Contractor determines final size of electrical equipment support based on electrical cabinet furnished.
2. Unless noted otherwise, or as directed by the foundation design engineer, install 3/4"ø post-installed anchors with a minimum embedment of 6" or 5/8"ø cast-in-place threaded anchors with a minimum embedment of 1'-6" having a minimum projection of 2".
3. Foundation design engineer shall verify foundation stability, concrete and reinforcement strength requirements, and anchorage requirements.
4. Install electrical equipment supports at locations shown on specifications drawings and/or as directed by COR.
5. Estimated electrical equipment support weight shown is based on maximum dimensions and five hole connection plates.

RECLAMATION
Managing Water in the West

ALWAYS THINK SAFETY
U.S. DEPARTMENT OF THE INTERIOR
BUREAU OF RECLAMATION
STANDARD DRAWINGS

STANDARD AND TYPICAL DESIGNS
MISCELLANEOUS METALWORK

REV. 0 2011-04-14 Bernal, Rodney P.E. INITIAL REQUIREMENTS

Designed: Lojmodiere
Affiliation: Reclamation
Drafted: Duell G. Huerta
Checked: Bernal, Rodney J. P.E.
Approved: Bernstein, Alfred J. P.E.
Approved: FOR REVIEW - Post Structure Shop

DENVER, CO 2015-03-23

ELECTRICAL EQUIPMENT SUPPORT, TYPE I

SECTIONS AND DETAIL

40-D-60001
SHEET 1 1

DWG SYSTEM
DWG NAME 40-D-60001
USE FILENAME 40-D-LORC
DATE 2015-03-23
TIME 13:26
USER LORC
USE LATEST REVISION
PLOTTED BY
AUTHORITY

Released

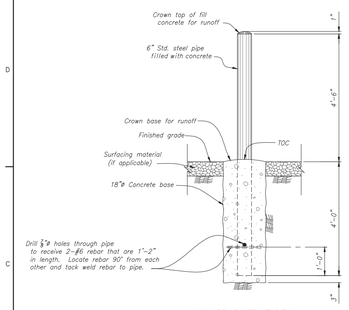

GUARD POST, TYPE I

FOR FOUNDATION EMBEDDED IN COMMON SOIL CONDITION
DO NOT GALVANIZE STEEL PIPE

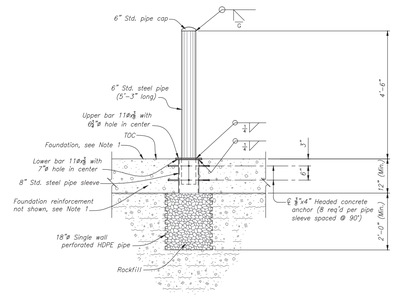

GUARD POST, TYPE III

REMOVABLE GUARD POST AND SLEEVE FOR SLAB-ON-GRADE CONDITION
GALVANIZE PIPE SLEEVE
DO NOT GALVANIZE STEEL PIPE

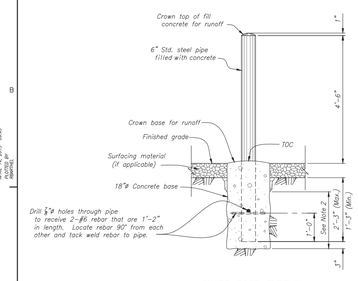

GUARD POST, TYPE II

FOR FOUNDATION EMBEDDED IN ROCK CONDITION
DO NOT GALVANIZE STEEL PIPE

GENERAL NOTES

ASTM denotes American Society for Testing and Materials.

AWS denotes American Welding Society.

AWWA denotes American Water Works Association.

COR denotes Contracting Officer's Representative.

HDPE denotes high density polyethylene.

Max. denotes maximum.

Min. denotes minimum.

psi denotes pounds per square inch.

Rebar denotes concrete reinforcement.

Std. denotes standard.

TOC denotes top of concrete.

Typ. denotes typical.

All welds, sections and details are typical for all similar conditions.

Coat steel guard post and upper bar per specifications or as directed by COR.

Unless noted otherwise, galvanize pipe sleeve and lower bar after fabrication per ASTM A385.

Fabricated Metalwork:

Bars	ASTM A36
Std. Steel Pipe	ASTM A53, Grade B
Rebar	ASTM A615

HDPE Pressure Pipe: ASTM F405.

Unless noted otherwise, make all welds continuous and in the shop.

Unless noted otherwise, fabricator shall determine edge preparation and root opening for groove welds.

Arc-Welding Electrodes: Filler metal and required shielding gases or fluxes shall be per AWS D1.1 with filler metal for steel having a minimum tensile strength of 70,000 psi.

Rockfill per ASTM C33, Coarse Aggregate, Size No. 57.

Unless noted otherwise, concrete structural design is based on concrete with a minimum compressive strength of 2,500 psi at 28 days and reinforcement with a minimum yield strength of 60,000 psi.

NOTES

1. Foundation design engineer shall verify foundation stability and the concrete and reinforcement strength requirements.
2. 12" Embedment in moderately weathered or less weathered rock and 24" embedment in intensely-to-moderately weathered or more weathered rock. Rock weathering classifications are defined within drawing 40-D-7022.
3. Install guard posts at locations shown on specifications drawings and/or as directed by COR.

RECLAMATION
Managing Water in the West

ALWAYS THINK SAFETY

U.S. DEPARTMENT OF THE INTERIOR
BUREAU OF RECLAMATION
STANDARD DRAWINGS

STANDARD AND TYPICAL DESIGNS

MISCELLANEOUS METALWORK

REV.	DATE	DESCRIPTION OF REVISION	BY	CHK	APPR
1	2015-04-14	Initial Release			

Bernard LaGmodiere
Drafter
Michael
Checker
Chad C. Huerta
Designer
Barthel, Rodney J P.E.
Elec. Engr.
Bennett, Alfred J P.E.
Struct. Engr.
FOR WORKER - Red Shutters Shop

DENVER, CO 2015-03-23

TYPICAL GUARD POSTS

NON-SECURITY APPLICATION

40-D-60002

SHEET 1 1

DWG NO. INFO. PLOTTED
DATE: 2015-04-14
PLOTTED BY
PLOTTING SCALE: 1:1

CAD SYSTEM
CAD FILENAME
CAD FILENAME

Released

ABBREVIATIONS

add'l = additional
bf = bottom face
bl = bottom layer
br = bottom row
CJ = Construction joint
℄ = Centerline
CL. = Centerline
clr. = clear
Cr.J = Contraction joint
Ct.J = Control joint
ctr. = center or centers
d_b = nominal diameter of reinforcing bar
Dwg. = Drawing
ec = each corner
ef = each face
EJ = Expansion joint
El. = Elevation
eq. = equal or equally
eq. spc. = equally spaced, equal spaces
er = each row
es = each side
ew = each way
ff = far face
fr = far row
fs = far side
HP = High point
if = inside face
ir = inside row
ℓ_d = development length
ℓ_{dh} = development length of standard hook
LP = Low point
ml = middle layer
mr = middle row
nf = near face
nr = near row
ns = near side
OCJ = Optional construction joint
of = outside face
or = outside row
spc. = spaced or spaces
Std. = Standard
tf = top face
tl = top layer
TOC = Top of concrete
tr = top row
TW = Tailwater
Typ. = Typical
uv = uniformly varying lengths of bars between lengths shown
VCJ = Vertical construction joint
WP = Working point
WS = Water surface, Waterstop

CONCRETE SYMBOLS

The different concrete placements are indicated by the following symbols:

Concrete - First stage
Concrete - Second stage
Concrete - Blockout
Concrete - Existing or in adjacent structures
Grout

NOTES TO DESIGNERS AND DETAILERS

1. Splice lengths shown in TABLES 3.0-60 thru 5.0-60 on 40-D-60004 are for Class B tension lap splices in accordance with ACI 318 and ACI 350. Assumed conditions for these tables in addition to the requirements shown on this drawing are uncoated reinforcement, normal weight concrete, and the transverse reinforcement index (K_{tr}) equal to zero. Splices or development lengths other than those shown in the tables must be detailed on the reinforcement specifications drawings.
2. Some factors which require additional consideration are: Beams or columns with ties, lightweight aggregate concrete, epoxy-coated reinforcement, excess reinforcement, bars in compression, bundled bars, and special seismic provisions.
3. The minimum centerline to centerline bar spacing requirements shown in TABLES 3.0-60 thru 5.0-60 on 40-D-60004 may not be applicable when using the provisions of ACI 350 Section 10.6 for distribution of flexural reinforcement to control flexural cracking.
4. Recalculation of lap splice lengths and development lengths by the designer may be required for changes in combinations of controlling variables per ACI 318 Section 25.4, or ACI 350 Section 12.2.
5. Lap splices and development lengths for horizontal bars in walls are designated as top bar splices and development lengths unless otherwise noted or detailed on the reinforcement specifications drawings.
6. Development lengths for deformed bars in tension terminating in a standard hook shall be calculated by the designer in accordance with ACI 318 Section 25.4.3.1 or ACI 350 Section 12.5. In cases where a restricted member thickness does not allow for the full development length of a standard hook, the designer shall use a reduced tensile capacity.

CONCRETE OUTLINE GENERAL NOTES

CHAMFER :
Chamfer edges of permanently exposed concrete surfaces, except slabs and top edges of curbs, with a 45° bevel, $\frac{3}{4}$" x $\frac{3}{4}$", unless otherwise shown on the specifications drawings.

CONCRETE PLACEMENT :
Before placing concrete, see specifications and manufacturer's drawings, for all embedded material which is required in the placement.

DIMENSIONS :
All dimensions to a joint are to the centerline of the joint unless otherwise shown.
Dimensions to beams, columns, and walls are from reference lines or other control points.
Beam and slab depths shall be measured from the top of the structural slab.
Dimensions given for the depth of recesses are from the surface of the structural concrete.
Thicknesses shown for walls and slabs placed against soil or rock are minimum dimensions.

EMBEDDED MATERIALS :
Before placing concrete, care shall be taken that all embedded items are in position and securely fastened in place. Anchor bolt locations and settings are shown on the structural steel, miscellaneous metal, concrete, and equipment drawings. Conduits and grounding cables are shown on the manufacturer's drawings and the electrical drawings. All projecting items, including waterstops, shall be supported and protected from damage and exposure.

FINISHES :
For location and classes of finishes for formed and unformed concrete surfaces, see the specifications drawings and/or paragraphs.

JOINTS :
All construction joints, identified as CJ, shall be provided where shown on the drawings. All optional construction joints, identified as OCJ, are to reduce the volume of placements or to facilitate construction. If optional joints are provided they shall be only at the locations shown. Relocation, addition, or elimination of construction joints will be subject to approval.

TOOLED EDGES :
Tool exposed edges of slabs and top edges of curbs to a radius of $\frac{1}{4}$", unless otherwise shown on the specifications drawings.

REINFORCEMENT GENERAL NOTES *(See Note 4)*

ACCESSORIES :
Bar supports, spacers, and other accessories are not shown on the design drawings. The recommendations of the ACI Detailing Manual-2004 (SP-66), or other approved supporting systems shall be used.

CODE AND DETAILING REFERENCES :
ACI Building Code Requirements for Structural Concrete (ACI 318-14).
ACI Detailing Manual-2004 (SP-66).
ACI Code Requirements for Environmental Engineering Concrete Structures (ACI 350-06).

COVER :
Place the reinforcement so that the clear distance between face of concrete and nearest reinforcement is 2" for #8 bars and smaller, and 3" for #9 bars thru #11 bars, unless otherwise shown on specifications drawings. Provide 3" clear distance from face of concrete for all bars when concrete exposure is cast against and permanently in contact with the ground. For corner bars cover, see ADDITIONAL REINFORCEMENT OPENINGS AND RECESSES, SECTION A-A on 40-D-60004. Clear distance is to the design dimension line.
Reinforcement parallel to construction joints shall have a minimum of 2" clear cover.

DIMENSIONS :
Dimensions are to the centerline of the bars except for embedment of hooks, which are dimensioned to the outside of the bar.
Clear cover dimensions are marked "clr." and are dimensioned to the outside of the bar.

PLACING :
Reinforcement at small openings (Max. 1'-6") in walls and slabs may be spread apart not more than 1.50 times the bar spacing.
Reinforcement shall be adjusted laterally to maintain a clear distance of at least 1" between the reinforcement and keys, waterstops, anchor bolts, form ties, conduits, and other embedded materials.
In heavily reinforced areas, relocation of the embedded material or cutting of reinforcement must be approved.
When bars are bent due to offsets less than 3" and recesses less than 3" deep, the slope of the inclined portion must not exceed 6 to 1.
Reinforcement parallel to anchor bolts or other embedded material shall be placed to maintain a clear distance of at least 1.33 times the maximum size aggregate.

PLAIN DOWELS :
Plain dowels across contraction joints shall be smooth bars uniformly coated with a film of oil before concrete placement.

REINFORCEMENT DOWELS :
Unless otherwise shown, dowels indicated on the drawing, such as #8(d), shall be embedded a length equal to ℓ_d and shall have a projection equal to that required for lap splicing to a bar of the same diameter.

SPACING :
The first and last bars in walls and slabs, stirrups in beams, and ties in columns are to start and end at a maximum of one half of the adjacent bar spacing. The minimum edge spacing shall be $2.5d_b$. For #9 thru #11 bars where minimum centerline bar spacing is 6" and the lap splice lengths requiring staggered placement shown in TABLES 3.0-60 thru 5.0-60 on 40-D-60004 are used, the minimum edge spacing shall be 3".

SPLICES :
The minimum length of lap for splicing parallel bars in tension shall be as given in TABLES 3.0-60 thru 5.0-60 on 40-D-60004.
Staggered lap splices shall be separated to give 12 inches clear between ends of adjacent splices.
Bars spliced by noncontact lap splices shall not be spaced transversely farther apart than one-fifth the required lap splice length, nor 6" on centers.
When reinforcing bars of different size are to be spliced, splice length shall be the larger of ℓ_d of larger bar and tension lap splice length of smaller bar.
Splices are to be made so that the required clear distances to face of concrete will be maintained.

STANDARD HOOKS FOR DEVELOPMENT OF DEFORMED BARS IN TENSION :
90-degree bend plus $12d_b$ extension at free end of the bar.
180-degree bend plus $4d_b$ extension, but not less than $2\frac{1}{2}$", at the free end of the bar.

STANDARD HOOKS FOR STIRRUPS, TIES, AND HOOPS :
#5 bar and smaller, 90-degree bend plus $6d_b$ extension, but not less than 3", at the free end of the bar.
#6, #7, and #8 bars, 90-degree bend plus $12d_b$ extension at the free end of the bar.
#8 bars and smaller, 135-degree bend plus $6d_b$ extension, but not less than 3", at the free end of the bar.
#8 bars and smaller, 180-degree bend plus $4d_b$ extension, but not less than 2.5", at the free end of the bar.

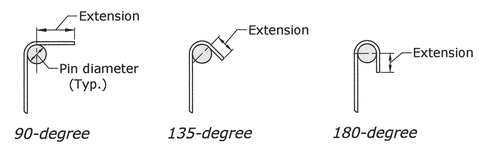

TABLE OF PIN DIAMETERS (INCHES)

BAR NO.	3	4	5	6	7	8	9	10	11
Standard bends	$2\frac{1}{4}$	3	$3\frac{3}{4}$	$4\frac{1}{2}$	$5\frac{1}{4}$	6	$9\frac{1}{2}$	$10\frac{3}{4}$	12
Stirrups, tie bends and hoops	$1\frac{1}{2}$	2	$2\frac{1}{2}$	$4\frac{1}{2}$	$5\frac{1}{4}$	6			

SYMBOLS :
Bars shown thus:

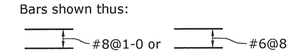

Indicate a group of the same size bars equally spaced.

An open circle at the end of a bar indicates a bend with the bar turned away from the observer.
A closed circle at the end of a bar indicates a bend with the bar turned towards the observer.

Splices shown thus indicate a lap splice, not a bend in the bar.

Mechanical splice
Headed deformed bar

NOTES

1. This drawing shall be used in conjunction with 40-D-60004.
2. For Minimum Requirements For Detailing Reinforcement, see 40-D-60004.
3. Unless otherwise shown on the concrete outline and/or reinforcement specifications drawings, the notes shown are minimum requirements and typical for all drawings that refer to this drawing.
4. Unless otherwise shown on the reinforcement specifications drawings or 40-D-60004, follow the recommendations established by the ACI Detailing Manual - 2004 (SP-66).
5. # Denotes reinforcement bar number.
6. Numerals in parentheses ( ) following notes, details, and section letters or numbers indicate the number of the drawing upon which the section or detail is indicated or shown. For example (60524) denotes drawing XXX-D-60524. The letters XXX shown here will be numbers denoting the project.

RECLAMATION
Managing Water in the West

ALWAYS THINK SAFETY
U.S. DEPARTMENT OF THE INTERIOR
BUREAU OF RECLAMATION
STANDARD DRAWINGS

STANDARD AND TYPICAL DESIGNS
CONCRETE OUTLINE AND REINFORCEMENT

R. BARTHEL
DESIGNED
R. RODRIGUEZ
DRAWN
J. WAGNER
CHECKED
McGovern, Robert K P.E.
TECH. APPR.
Bernstein, Alfred I
APPROVED
PEER REVIEWER - Plant Structures Group

DENVER, CO 2016-09-23

GENERAL NOTES FOR CONCRETE OUTLINE AND REINFORCEMENT

40-D-60003

SHEET 1 OF 2

DATE AND TIME PLOTTED SEPTEMBER 23, 2016 07:26
PLOTTED BY RRODRIGUEZ

CAD SYSTEM AutoCAD Rel. 20.0s
CAD FILENAME 40-D-60003-RD-1.DWG

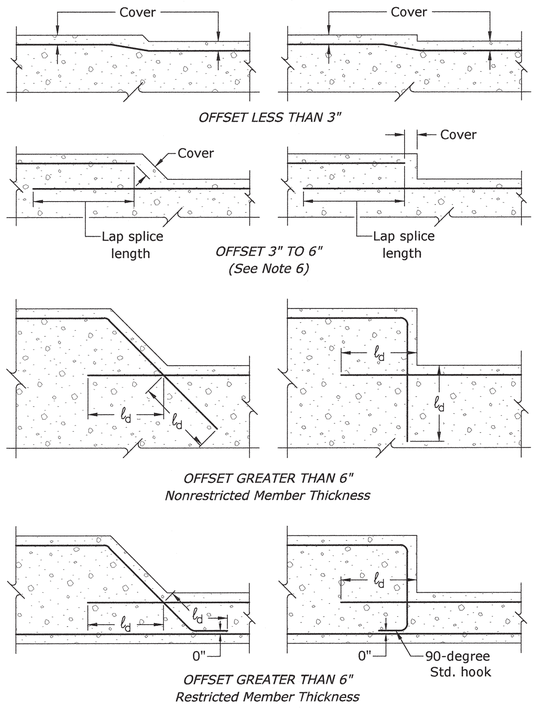

TYPICAL OFFSET DETAILS

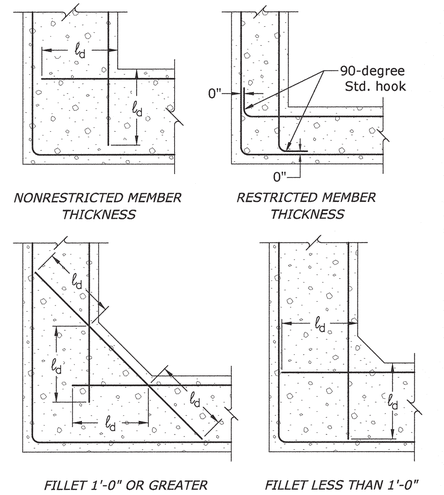

TYPICAL CORNER DETAILS

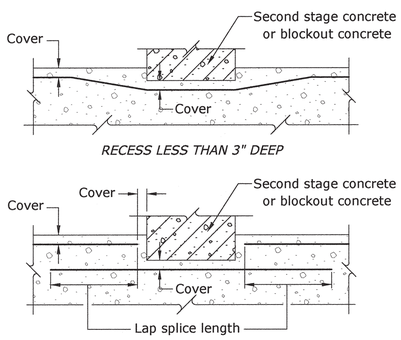

TYPICAL BLOCKOUT RECESS DETAILS
(Second stage concrete shown)

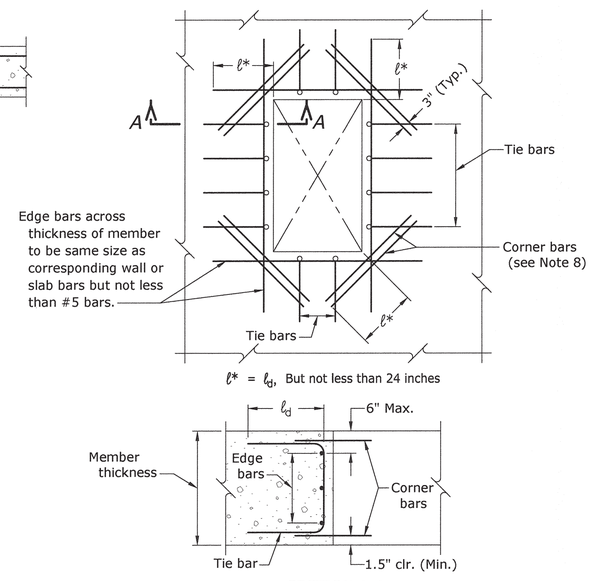

SECTION A-A

OPENINGS :
TABLE FOR ADDITIONAL REINFORCEMENT

MEMBER THICKNESS	TIE BARS	EDGE BARS	CORNER BARS
Less than 9"	None	1 - ctr.	2 - #4 ctr.
9" thru 1'-5"	None	2 - (1 ef)	4 - #4 (2 ef)
1'-6" thru 3'-0"	#4@1'-0"	3 - eq. spc.	4 - #4 (2 ef)
Over 3'-0"	#6@1'-0"	Spc. @ 1'-0"	4 - #4 (2 ef)

Omit edge and tie bars along sides of openings where opening dimension is less than 1'-6".
Omit corner bars at sides of openings adjacent to floors, walls, or beams.
Omit corner bars if both dimensions of opening are less than 1'-6".

RECESSES :
Use corner bars in face of recesses deeper than 4" if either dimension of recess is equal to or greater than 1'-6".

ADDITIONAL REINFORCEMENT AROUND OPENINGS AND RECESSES

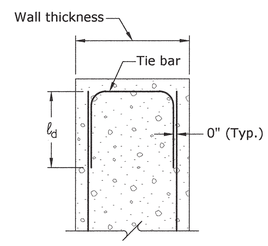

TYPICAL TOP OF WALL DETAIL

For wall thickness less than 1'-6", tie bars not required.
For wall thickness 1'-6" and larger, tie bars to be #6@1'-0" unless otherwise shown on reinforcement specifications drawings.

f'c = 3,000 psi TABLE 3.0-60 fy = 60,000 psi

Bar size No. *** IP (SM)	MINIMUM ℄ to ℄ BAR SPACING (INCHES)	LAP SPLICE LENGTH (INCHES)		DEVELOPMENT LENGTH ℓd (INCHES)	
		TOP BARS *	OTHER BARS	TOP BARS *	OTHER BARS
3 (10)	3	17	13	13	12
4 (13)	3	23	18	18	14
5 (16)	3.5	28	22	22	17
6 (19)	4	34	26	26	20
7 (22)	4.5	49	38	38	29
8 (25)	5	56	43	43	33
9 (29)	6	63	49	49	38
10 (32)	6.5	71	55	55	42
11 (36)	7.5	79	61	61	47
10 (32)	6	75**	58**	58	45
11 (36)	6	93**	71**	71	55

f'c = 4,000 psi TABLE 4.0-60 fy = 60,000 psi

Bar size No. *** IP (SM)	MINIMUM ℄ to ℄ BAR SPACING (INCHES)	LAP SPLICE LENGTH (INCHES)		DEVELOPMENT LENGTH ℓd (INCHES)	
		TOP BARS *	OTHER BARS	TOP BARS *	OTHER BARS
3 (10)	3	15	12	12	12
4 (13)	3	20	15	15	12
5 (16)	3.5	25	19	19	15
6 (19)	4	29	23	23	18
7 (22)	4.5	43	33	33	25
8 (25)	5	49	37	37	29
9 (29)	6	55	42	42	33
10 (32)	6.5	62	47	47	37
11 (36)	7.5	68	53	53	41
10 (32)	6	65**	50**	50	39
11 (36)	6	80**	62**	62	48

f'c = 5,000 psi TABLE 5.0-60 fy = 60,000 psi

Bar size No. *** IP (SM)	MINIMUM ℄ to ℄ BAR SPACING (INCHES)	LAP SPLICE LENGTH (INCHES)		DEVELOPMENT LENGTH ℓd (INCHES)	
		TOP BARS *	OTHER BARS	TOP BARS *	OTHER BARS
3 (10)	3	13	12	12	12
4 (13)	3	18	14	14	12
5 (16)	3.5	22	17	17	13
6 (19)	4	26	20	20	16
7 (22)	4.5	38	29	29	23
8 (25)	5	44	34	34	26
9 (29)	6	49	38	38	29
10 (32)	6.5	55	43	43	33
11 (36)	7.5	61	47	47	36
10 (32)	6	58**	45**	45	35
11 (36)	6	72**	55**	55	43

f'c = 3,500 psi TABLE 3.5-60 fy = 60,000 psi

Bar size No. *** IP (SM)	MINIMUM ℄ to ℄ BAR SPACING (INCHES)	LAP SPLICE LENGTH (INCHES)		DEVELOPMENT LENGTH ℓd (INCHES)	
		TOP BARS *	OTHER BARS	TOP BARS *	OTHER BARS
3 (10)	3	16	12	12	12
4 (13)	3	21	16	16	13
5 (16)	3.5	26	20	20	16
6 (19)	4	31	24	24	19
7 (22)	4.5	45	35	35	27
8 (25)	5	52	40	40	31
9 (29)	6	59	45	45	35
10 (32)	6.5	66	51	51	39
11 (36)	7.5	73	56	56	43
10 (32)	6	70**	54**	54	41
11 (36)	6	86**	66**	66	51

f'c = 4,500 psi TABLE 4.5-60 fy = 60,000 psi

Bar size No. *** IP (SM)	MINIMUM ℄ to ℄ BAR SPACING (INCHES)	LAP SPLICE LENGTH (INCHES)		DEVELOPMENT LENGTH ℓd (INCHES)	
		TOP BARS *	OTHER BARS	TOP BARS *	OTHER BARS
3 (10)	3	14	12	12	12
4 (13)	3	19	14	14	12
5 (16)	3.5	23	18	18	14
6 (19)	4	28	21	21	17
7 (22)	4.5	40	31	31	24
8 (25)	5	46	35	35	27
9 (29)	6	52	40	40	31
10 (32)	6.5	58	45	45	35
11 (36)	7.5	64	50	50	38
10 (32)	6	61**	47**	47	37
11 (36)	6	76**	58**	58	45

* Top bars are defined as horizontal reinforcement with a casting position of more than 12 inches of fresh concrete placed below the bar (see NOTES TO DESIGNERS AND DETAILERS, Note 5 on 40-D-60003).
** Splices must be staggered.
*** IP = Inch-pound bar size designation.
SM = Soft metric bar size designation.

NOTES

1. This drawing shall be used in conjunction with 40-D-60003.
2. For Concrete Outline General Notes and Reinforcement General Notes, see 40-D-60003.
3. For ABBREVIATIONS and CONCRETE SYMBOLS, see 40-D-60003.
4. For NOTES TO DESIGNERS AND DETAILERS, see 40-D-60003.
5. Unless otherwise shown on the reinforcement specifications drawings, the details shown are minimum requirements and typical for all reinforcement drawings that refer to this drawing.
6. This detail may not be appropriate for tension areas of shallow structural members. If in doubt, use detail for recess greater than 6".
7. TABLES 3.0-60 thru 5.0-60 generated using ACI 318 Eq. 25.4.2.3a and ACI 350 Eq. 12-1.
8. Development of diagonal corner bars in close proximity to another opening, wall or slab, will require bends or hooks.

RECLAMATION
Managing Water in the West

ALWAYS THINK SAFETY

U.S. DEPARTMENT OF THE INTERIOR
BUREAU OF RECLAMATION
STANDARD DRAWINGS

STANDARD AND TYPICAL DESIGNS

CONCRETE OUTLINE AND REINFORCEMENT

REV NO	DATE	DESCRIPTION	BY
1	2016-12-08	D MINOR REVISION	McGovern, Robert K P.E.

R. BARTHEL DESIGNED
R. RODRIGUEZ DRAWN
L. NGUYEN CHECKED
McGovern, Robert K P.E. TECH. APPR.
Bernstein, Alfred I APPROVED
PEER REVIEWER - Plant Structures Group

DENVER, CO 2016-09-23

MINIMUM REQUIREMENTS FOR DETAILING REINFORCEMENT

40-D-60004

SHEET 2 OF 2

Released
DATE AND TIME PLOTTED SEPTEMBER 22, 2016 07:27
PLOTTED BY RRODRIGUEZ
CAD SYSTEM Autodesk Civil 3D Rev. 20.0s
CAD FILENAME 40-D-60004-RD-2.DWG

BOX TERMINATION

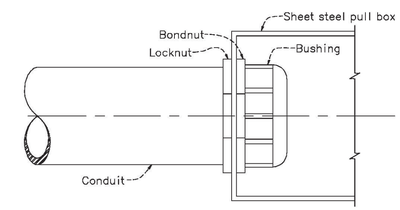

DETAIL "C"

TERMINATING METAL CONDUIT IN SHEET STEEL PULL BOXES

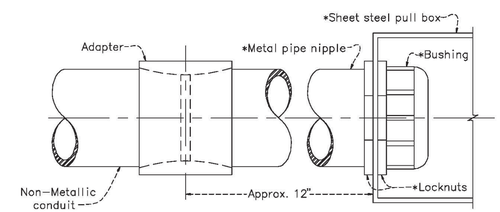

DETAIL "D"

TERMINATING NON-METALLIC CONDUIT IN SHEET STEEL PULL BOXES

*Use aluminum or brass and slot steel box between knockouts for single phase.

ALWAYS THINK SAFETY

FORMERLY X-D-1523-7

REV. 3-25-46
REV. 4-1-42

DEPARTMENT OF THE INTERIOR
BUREAU OF RECLAMATION
DENVER OFFICE
ELECTRICAL STANDARDS

DENVER, COLO. 6-14-38 | 104-D-254

MISCELLANEOUS DESIGNATIONS

ALT _____ Alternator
A _____ Suffix designation for auxilliary control circuit
ASC _____ Adjustable speed controller
BFV _____ Butterfly valve
C or CAP _____ Capacitor
CB _____ Circuit breaker
CLF _____ Current limiting fuse
CNT _____ Counter
DV _____ Discharge valve
EXC _____ Exciter
FU _____ Fuse
GFCI _____ Ground fault circuit interrupter
GRD _____ Ground
GRS _____ Galvanized rigid steel conduit
GV _____ Gate or guard valve
HR _____ Hand reset (Use as suffix)
I _____ Input
IL _____ Indicating lamp, add prefix for color
IMC _____ Intermediate steel conduit
MCE _____ Motor control equipment (2500 – 5000 volts)
M _____ Motor
MCC _____ Motor control center (600 – volts and lower)
NP _____ Nameplate
NC _____ Normally closed
NO _____ Normally opened
NSPB _____ Nonsegregated phase bus
O _____ Output
PB _____ Pushbutton (Momentary contact type)
PBM _____ Pushbutton (Maintaining contact type)
PC _____ Programmable controller
PR _____ Probe operated relay (Refer to FS for suffix)
REC _____ Rectifier
R/I _____ Resistance to current transducer
SF _____ Service factor
SO _____ Solenoid oiler
SV _____ Solenoid operated valve
TE _____ Time delay on energization
TD _____ Time delay on deenergization
TT _____ Thermal switch
V/I _____ Voltage to current transducer
VLV _____ Valve
WL _____ Water level contact on telemeter receiver (Refer to FS for suffix)

WRM _____ Wound rotor motor
X,Y,X _____ Suffix for auxiliary relay, switch, or contactor (ALX,CSX,FLX, ect.)

–1,–2,–3, etc. _____ Suffix for unit number for pumping units, gates, valves, ect.

1,2,3, etc. _____ Suffix for electrical device numbering, such as TR1, TR2, ect.

* _____ Estimated rating

RELAY DESIGNATIONS

AL _____ Alarm relay
BG _____ Bearing temperature relay
CR _____ Control relay
FL _____ Field loss relay
FR _____ Field application relay
GP _____ Ground protective relay
IS _____ Incomplete sequence relay
LO _____ Lockout relay
OC _____ Overcurrent relay
OL _____ Overload relay
OV _____ Overvoltage relay
PO _____ Pullout (Loss of synchronism relay)
RC _____ Remote control relay
RSR _____ Remote sensing relay
SC _____ Squirrel cage (damper winding(relay
SR _____ Shift register
TR _____ Time delay relay
UF _____ Under frequency relay
UV–O/R _____ Undervoltage single and reverse phase relay
WT _____ Winding temperature relay

CONTACTOR DESIGNATIONS

FC _____ Field contactor
LC _____ Lighting contactor
M _____ Main contactor
MA _____ Air compressor motor contactor
MF _____ Vent fan motor contactor
MG* _____ Gate motor contactor
MO* _____ Oil pump motor contactor
MV* _____ Valve motor contactor
*Use suffix as application
–C Closing function
–L Lowering function
–O Opening function
–R Rasing function
S _____ Starting contractor
1S _____ Start contactor
2S _____ Start transition contactor } Reduced voltage starting
R _____ Run contactor

SWITCH DESIGNATIONS

CS _____ Control switch
FCD _____ Foreign circuit disconnect switch
FS _____ Float switch (Use suffix letter_ _ C–canal, P–pipe, R–reservoir, S–sump, T–tank)
LS _____ Limit switch
PS _____ Pressure switch
SS _____ Selector switch
TQ _____ Torque switch
TSW _____ Transfer switch

TRANSFORMER DESIGNATIONS

CCT _____ Control circuit transformer
CT _____ Current transformer
PT _____ Potential transformer
T _____ Transformer
TH _____ Transformer oil temperature
TL _____ Transformer oil level
TP _____ Transformer pressure relief
SST _____ Station service transformer

INSTRUMENT AND METER DESIGNATIONS

AM _____ Ammeter
AS _____ Ammeter transfer switch
CNT _____ Start counter
INT _____ Integrating instrument
PF _____ Power–factor meter
PST _____ Phase shifting transformer
RDM _____ Recording demand meter
TM _____ Time meter
V _____ Voltmeter
VAR _____ Varmeter
VARH _____ Varhour meter
VS _____ Voltmeter transfer switch
W _____ Wattmeter
WH _____ Watthour meter
WHD _____ Watthour demand meter
(R/A) _____ Indicates recording instruments
The asterisk is not part of the symbol.
Replace the asterisk with letter or letters depending on the function of the instrument.

DEVICE SYMBOLS

CS — Control switch
AS — Ammeter transfer switch
VS — Voltmeter tansfer switch
Surge arrester
Capacitor
Reactor
Potential transformer
Current transformer
Power or distribution transformer
3ø, Wye grounded connection
3ø, Delta connection
3ø, Broken delta connection
3ø Open delta connection (corner grounded)

Disconnecting switch
Liquid level switch (Normally open)
Vacuum and pressure switch (Normally closed)
Temperature actuated switch (Normally open)
Flow actuated switch (Normally open)
Limit switch–direct actuated (Normally open)
Torque switch (Normally closed)
3–Position selector switch
Air circuit breaker thermomagetic trip 1 Frame size, 2 Inverse time trip, 3 Instantaneous trip
1 Rectifier, 2 Reactor, 3 Inverter
Silicon controlled rectifier (Solid state DC switch)
Air circuit breaker, electrically operated
Air circuit breaker, withdraw type
Contactor with thermal trip
Contactor with magnetic trip
Contactor with CT and magnetic trip relay
Contactor (Normally open)
Contactor (Normally closed)
Auxiliary contactor (Closes when main device is closed)
Auxiliary contactor (Open when main device is closed)
Relay contact number
Relay coil, contactor coil
Horn–gap disconnectiong switch
Fuse
Fuse, current limiting type
Instrument shunt
Resistor
Rheostat, or potentiometer
Separable connector
Indicating lamp W–white, R–red, G–green, Y–yellow, A–amber, B–blue
Battery
Bell
Horn
Pushbutton (Normally open, momentary contact)
Pushbutton (Normally closed, momentary contact)
Maintained contact pushbutton

Probe, water level detector
Load interrupter switch
Motor
Triac (Solid state AC switch)
Wound rotor motor

WIRING SYMBOLS

Ground connection
Interconnection between separately owned systems
Duplex single–gang plug receptacle
Single weatherproof plug receptacle
Watertight three–phase power receptacle
Single pole switch
Three way switch
Luminaire, letter indicates type, number indicates wattage
Represents connection from external equipment. Does not necessarily represent a terminal block.
High voltage cable termination
Represents connection from external equipment via–multi–pair control (signal) cable.

GROUND SYMBOLS

Cable exposed
Cable embedded in concrete
Cable concealed but not embedded
Cable buried directly in earth
Ground rod
Welded or bolted connection
Cable riser

Indicates ground when required for clarity
Ground connector per 40–D–4334, Fig. 4
Ground ring

CONDUIT SYMBOLS

Exposed
Embedded in concrete
Concealed but not embedded
Buried directly in earth
Bending toward observer
Bending away from observer
Capped
Pull box or junction box

Designation number
Liquid tight flexible metal conduit
Sealing bushing, conduit to cable

NOTES

1. If designations and symbols other than the ones shown on this drawing used, they shall be shown on the approprate drawing.
2. For additional designations and symbols refer to NEMA Standards Pub, ICS–1970.
3. Contacts in control circuits are shown in the deenergized position. Liquid level switches are shown with liquid container empty. Vaccum and pressure switches are shown at ambient pressure. Temperature switches are shown at ambient temperature.

3 – 24 – 00 D.O.G.	REVISED TITLE BLOCK AND REDRAWN IN AUTOCAD 14.
3 – 11 – 81 D – D.G.	MINOR REVISIONS

ALWAYS THINK SAFETY

UNITED STATES
DEPARTMENT OF THE INTERIOR
BUREAU OF RECLAMATION
STANDARD DESIGNS

PUMPING PLANT
ELECTRICAL INSTALLATIONS
DESIGNATIONS AND SYMBOLS

DESIGNED N.J.B. TECH. APPR. P.L. ANNA
DRAWN D.D. GROULLARD SUBMITTED S.M. DENTON
CHECKED E.M.T. APPROVED M.H. KIGHT
CHIEF, ELECTRICAL BRANCH

CADD SYSTEM AutoCAD Rel. 14.01b DENVER, COLORADO
CADD FILENAME 104D757.DWG
DATE AND TIME PLOTTED FEBRUARY 13, 1982 Mar 31, 2000 14:46
104–D–757

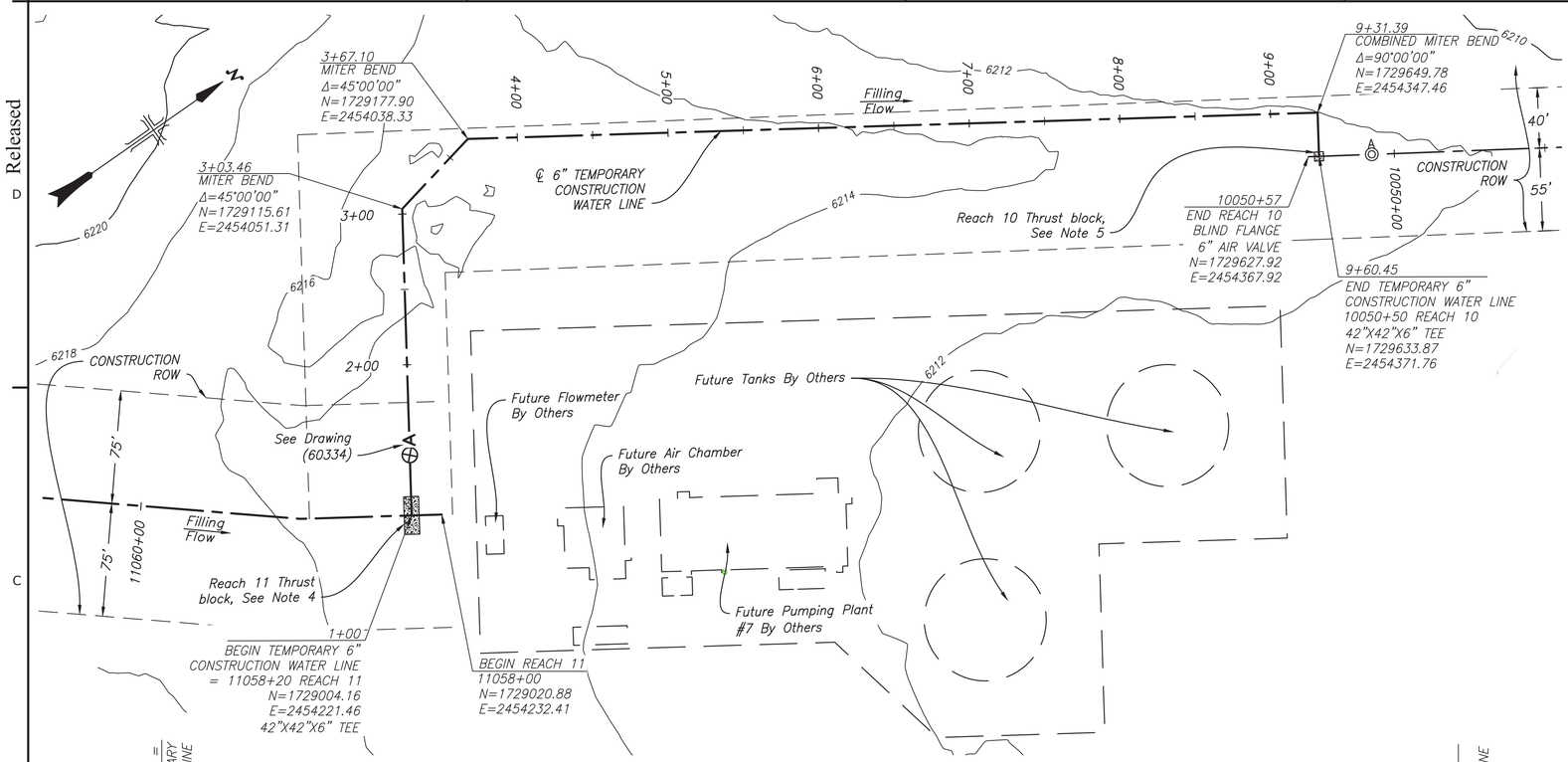

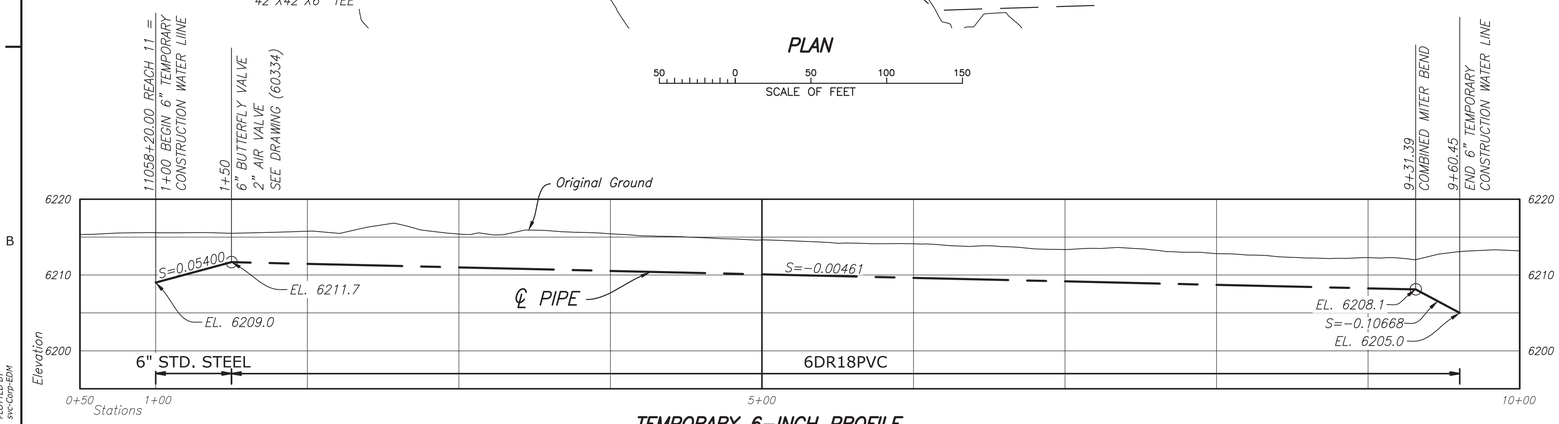

TEMPORARY 6-INCH PROFILE

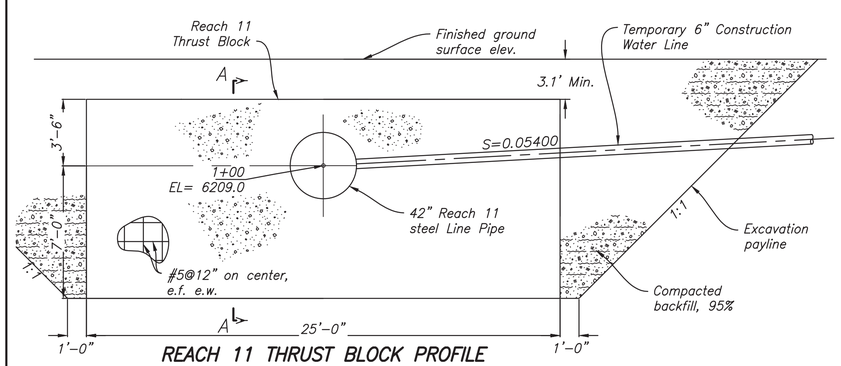

REACH 11 THRUST BLOCK PROFILE

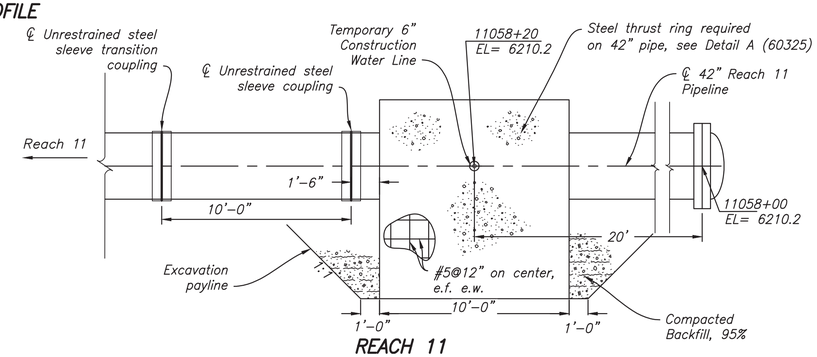

REACH 11 SECTION A–A

MITER BEND DATA TABLE		
P.I. Station	Angle	Restrained Length (ft)
3+03.46	45°00'00"	19
3+67.10	45°00'00"	19
9+31.39	90°00'00"	Unrestrained

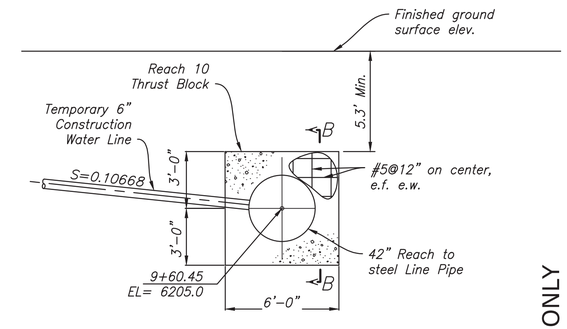

REACH 10 THRUST BLOCK PROFILE

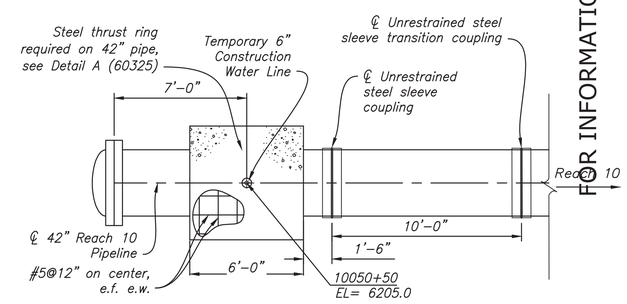

REACH 10 SECTION B–B

OPERATION

1. Filling operations are to be performed by Bureau of Reclamation personnel ONLY. Contractor must request water from COR and provide a minimum 72 hour notice.
2. Valve on Reach 12A (Sta 12011+35) must be closed, see sheet 1695–D–1.
3. The 6" Valve at 1+50 must be closed and valve operator locked at all times when not filling Reaches 9 and 10.
4. Air valve at Station 10050+15 of Reach 10 shall be REMOVED prior to and during filling operations to provide an air vent for the pipe.
5. A pressure gauge installed on 6" air valve at the beginning of Reach 10 (Station 10003+58.44, Sheet 60307) to be used to estimate filling level in Reach 10.
6. A pressure gauge installed on 6" air valve at the beginning of Reach 9 (Station 90010+00, Sheet 60282) to be used to estimate filling level in Reach 9.
7. The operation of the valve and temporary 6" construction water line must be monitored at all times while the valves are open.
8. 6" Valve to be slowly closed prior to water level exceeding the 6" Air valve stem at Station 10050+57.07.
9. The pressure in the Reach 10 line should be monitored periodically when not in use.

NOTES

1. For Reach 10 Plan and Profile, see (60306).
2. For Reach 11 Plan and Profile, see (60309).
3. See, 40–D–60003 and 40–D–60004 for general notes for concrete outline and reinforcement.
4. For Reach 11's blind flange thrust block, 410' of restrained joints on Reach 11 42"ø line pipe can be used in lieu of concrete. Steel pipe joint shall be butt welded. Fiberglass pipe joint restraint not allowed.
5. For Reach 10's blind flange thrust block, 40' of restrained joints on Reach 10 42"ø line pipe can be used in lieu of concrete.

FOR INFORMATION ONLY

RECLAMATION
Managing Water in the West

ALWAYS THINK SAFETY

U.S. DEPARTMENT OF THE INTERIOR
BUREAU OF RECLAMATION
NAVAJO-GALLUP WATER SUPPLY PROJECT
NEW MEXICO

SAN JUAN LATERAL - REACH 10

LINE PIPE

REV NO			
2	2018-02-07 Bowles, Linda M P.E.	D	Corrected station callout to 11058+20 at 6" Tee for Reach 11 Section A-A.
1	2017-08-08 Bowles, Linda M P.E.	D	Revised Construction ROW widths. Added a pressure gage to Reach 9 with Note 6.

Kylie Fink
DESIGNED
Kylie Fink
DRAWN
Andrew Marner
CHECKED
Bowles, Linda M P.E.
TECH. APPR.
Duke, Wylie C (Chris) P.E.
APPROVED
PEER REVIEWER - Manager - Water Conveyance Group

DENVER, CO 2017-03-30

PLAN AND PROFILE

TEMPORARY 6-INCH CONSTRUCTION WATER LINE

1695-D-60308

SHEET 2 OF 2

Released

DATE AND TIME PLOTTED 3/29/2017 10:21 AM
PLOTTED BY svc-Corp-EDM

CAD SYSTEM AutoCAD Rel. 20.0s
CAD FILENAME 1695-D-60308-RD-1.dwg

RECLAMATION
Managing Water in the West

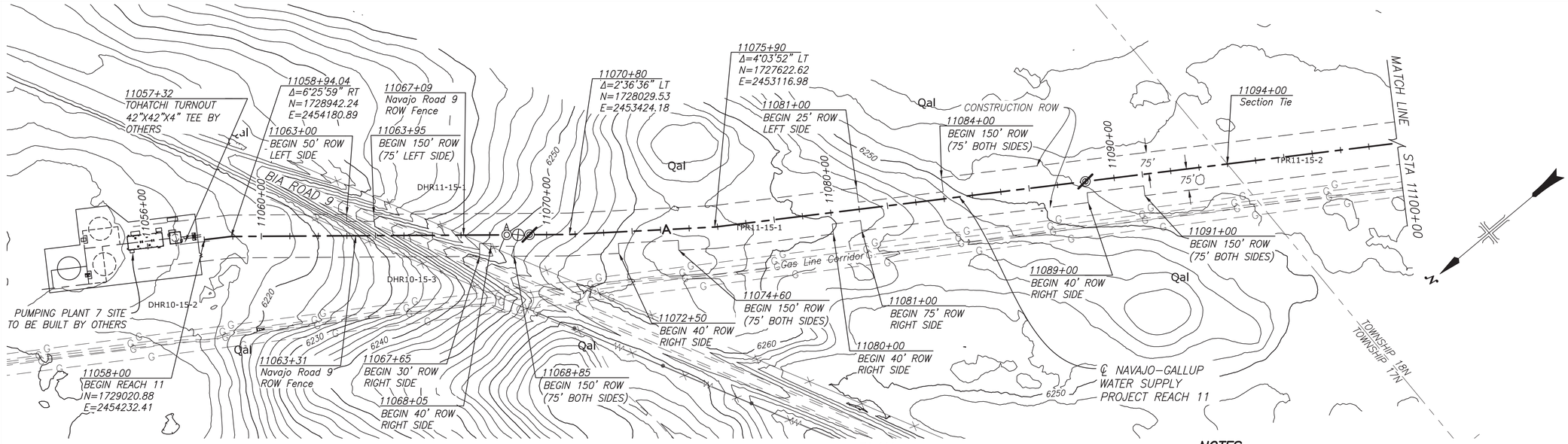

PLAN

SCALE OF FEET 200 0 200 400 600

NOTES

1. For General Notes, Symbols, Abbreviations, and Pipe Classification, see (60281).
2. For Temporary 6" Construction Water Line, see (60308).
3. For BIA Road 9 Crossing, see (60330).

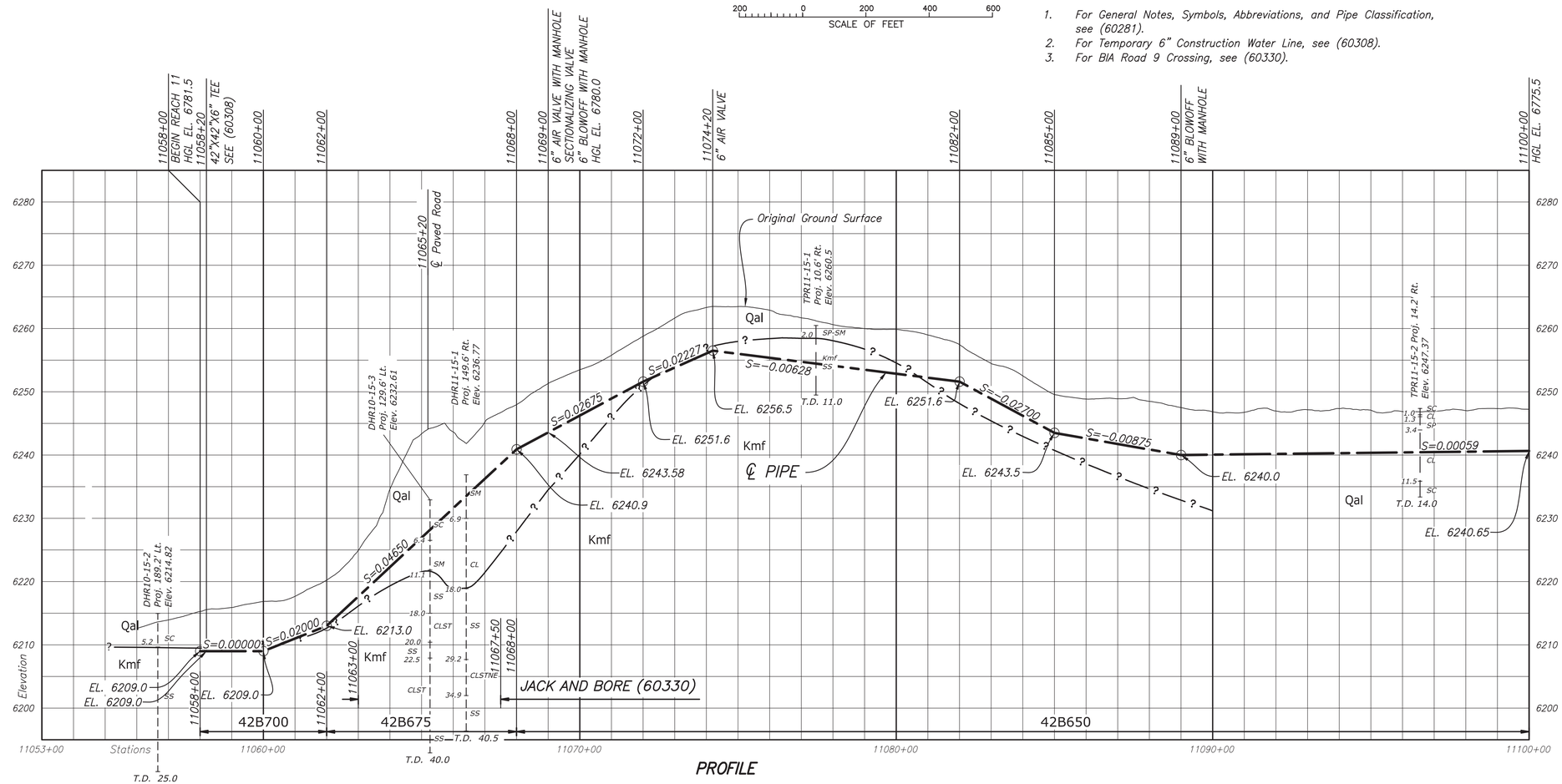

PROFILE

FOR INFORMATION ONLY

ALWAYS THINK SAFETY

U.S. DEPARTMENT OF THE INTERIOR
BUREAU OF RECLAMATION
NAVAJO-GALLUP WATER SUPPLY PROJECT
NEW MEXICO

SAN JUAN LATERAL - REACH 11

LINE PIPE

REV NO			
3	D	2018-06-21	Bowles, Linda M P.E.	Adjusted Construction ROW widths to 100' total from Sta. 11081+00 to Sta. 11084+00.
2	D	2018-02-23	Bowles, Linda M P.E.	Reduced Construction ROW widths to 25' left from Sta. 11081+50 to Sta. 11083+25.
1	D	2017-05-19	Bowles, Linda M P.E.	Revised Construction ROW widths.

X
DESIGNED
X
DRAWN
X
CHECKED
Bowles, Linda M P.E.
TECH. APPR.
Duke, Wylie C (Chris) P.E.
APPROVED
PER REVIEWER - Manager - Water Conveyance Group

DENVER, CO 2017-03-30

GEOLOGY

TECH. APPR. JUSTIN GILBERT
SUBMITTED PAUL GARDNER
APPROVED JUSTIN GILBERT Supervisory Geologist

PLAN AND PROFILE

BEGINNING
TO
STA. 11100+00

1695-D-60309

SHEET 1 OF 5

Released

DATE AND TIME PLOTTED
3/22/2017 3:06 PM
PLOTTED BY
svc-Corp-EDM

CAD SYSTEM
AutoCAD Rel. 20.0s
CAD FILENAME
1695-D-60309-RD-1 OF 5.dwg

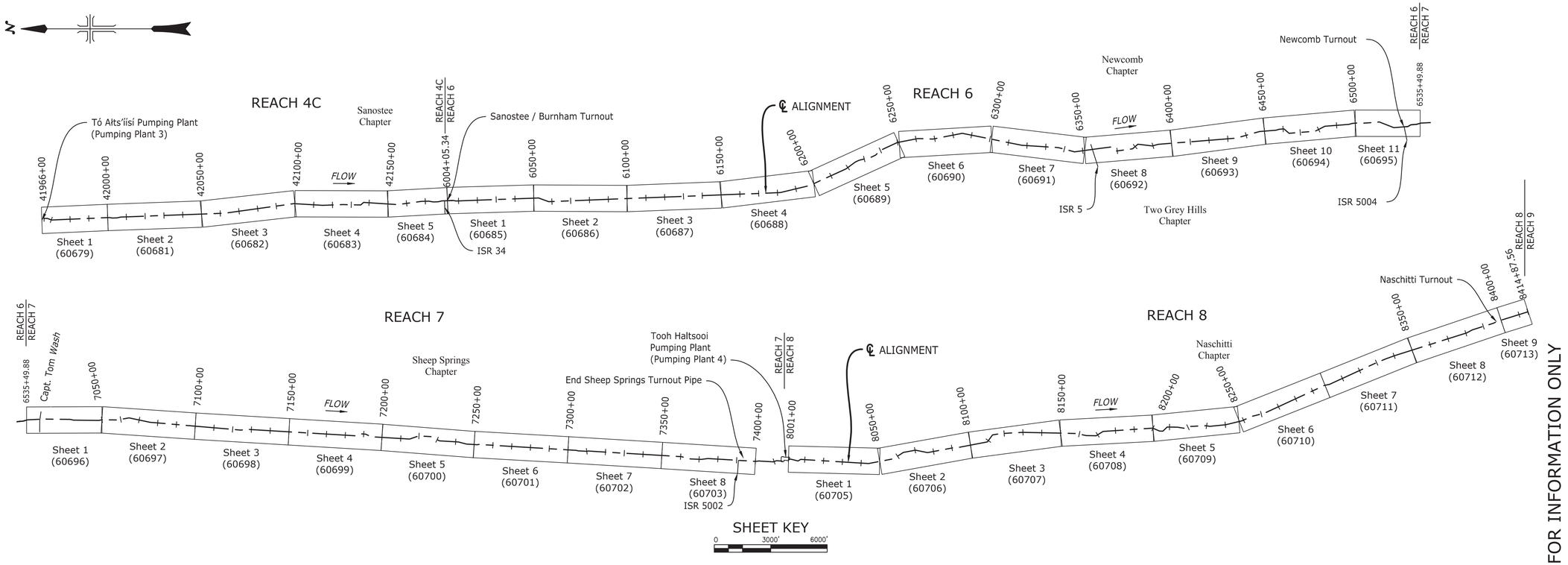

FOR INFORMATION ONLY

GENERAL NOTES

1. General Notes, Symbols, Abbreviations, and Pipe Classification apply to all plan and profile drawings.
2. Contractor shall determine the voltage at all power lines and share this information with the OGR.
3. At angle points that do not require miter bends, long radius curves (vertical and horizontal) shall be constructed by pulling joints.
4. Stations are approximate and may be varied as directed.
5. Minimum earth cover over the top of the pipe shall be 3.5 feet unless the line pipe is at an existing wash, at a roadway, irrigation crossings, or farmlands, and then the minimum cover is 5 feet, unless otherwise noted.
6. All joints are to be restrained and backfill compacted to 85% between the wash crossing stations identified on the plan and profiles, see (60736).
7. Where the line pipe crosses an existing pipe, a minimum clear distance of 2 feet outside to outside between line pipe and existing pipe shall be provided unless otherwise directed. The backfill between the crossing pipelines shall be controlled low strength material (CLSM) as stated in the specifications.
8. Hydraulic grade line elevations (HGL EL) shown are for the design Q of 51.5 cfs at steady state for Reach 4C, Reach 6, and Reach 7, and 47.7 cfs for Reach 8.
9. Unknown elevations and diameters of existing utilities shall be determined by the contractor and reported to the COR in time to allow adjustment of grades and design, if required, before contractor submits pipe, fittings, and miter bends for approval.
10. For limits on excavation near gas lines, see specifications.
11. Grid based on New Mexico State Coordinate System West Zone NAD 83. Vertical datum based on NAVD 88.
12. Reach 4C Ground to grid conversion factor is 0.999734970999.
    Reach 6 Ground to grid conversion factor is 0.999729101996.
    Reach 7 Ground to grid conversion factor is 0.999723090000.
    Reach 8 Ground to grid conversion factor is 0.999710324996.
13. Metallic pipe is required, and joints shall be restrained when on slopes greater than 0.20. See (60727) for additional steep pipe details.
14. Maintained roads require gravel surfacing and restrained joints per specifications. See (60733) for details.
15. CAUTION: Call New Mexico One Call 811 before you dig.
16. Helium Line location is approximate. Do not disturb without OGR approval.

GEOLOGIC NOTE

For General Geologic Legend Explanation, and Notes, see the following:
Reach 4C - 1695-529-60162
Reach 6 - 1695-529-60101
Reach 7 - 1695-529-60088
Reach 8 - 1695-529-60087

ABBREVIATIONS

CR	- County Road
HGL	- Hydraulic Grade Line
ISR	- Indian Service Route
NTUA	- Navajo Tribal Utility Authority
OGR	- Onsite Government Representative
OH	- Over Head
PNM	- Public Service Company of New Mexico
ROW	- Right-of-Way
RTE	- Route
TP	- Test Pit

PIPE CLASSIFICATIONS

The line pipe is designated as 48B600, 42C350 etc. The 48 and 42 indicate the nominal pipe diameter in inches. The letters B, C, D, and E denote cover class of 10, 15, 20, and 25 feet respectively, of design earth cover over the top of the pipe. The letter K denotes steep pipe sections. The number 600, 350, etc. denotes the maximum allowable hydrostatic pressure head, in feet, measured at the centerline of the pipe.

UTILITY LOCATION

1. New Mexico 811, 1021 Eubank Blvd. N.E., Albuquerque, NM 87112, Dial 811 or 800-321-2537.
2. Navajo Tribal Utility Authority (NTUA), P.O. Box 170, Fort Defiance, AZ 86504, 928-729-5721, www.ntua.com
3. Navajo Nation Oil and Gas Company, physical address 50 Narboro Circle West, St Michaels, AZ 86511, mailing address P.O. Box 4439, Window Rock, AZ 86515, 928-871-4880, www.nnogc.com.

SYMBOLS

- Air Valve
- Blowoff
- ℄ Line Pipe
- Chain Link Fence
- Construction ROW
- Dirt Road
- Field Fence
- Geologic Unit Contact
- Geologic Unit Approx Contact
- Geologic Unit Queried Where Inferred
- Helium Line (abandoned)
- Manhole
- Air Valve with Manhole
- Blowoff with Manhole
- Natural Gas Pipeline
- Paved Road
- Powerline
- Sectionalizing Valve
- Sewerline
- Telephone
- US Hwy 491 ROW
- Waterline

RECLAMATION
Managing Water in the West

ALWAYS THINK SAFETY

U.S. DEPARTMENT OF THE INTERIOR
BUREAU OF RECLAMATION
NAVAJO-GALLUP WATER SUPPLY PROJECT
NEW MEXICO

SAN JUAN LATERAL - BLOCK 4C - 8

LINE PIPE

M. LEAVITT
DESIGNED
M. LEAVITT
DRAWN
D. L. GESUNDHEIT
CHECKED
Clough, Nicholas W P.E.
TECH. APPR.
Bowles, Linda M P.E.
APPROVED
PEER REVIEWER - Peer Reviewer

DENVER, CO 2019-03-13

SHEET KEY

NOTES AND SYMBOLS

1695-D-60677

SHEET 1

Released

LAST SAVED DATE 2019-03-13
LAST SAVED BY AMARNER

CAD SYSTEM AutoCAD 22.0s
CAD FILENAME 1695-D-60677-RD-1.DWG

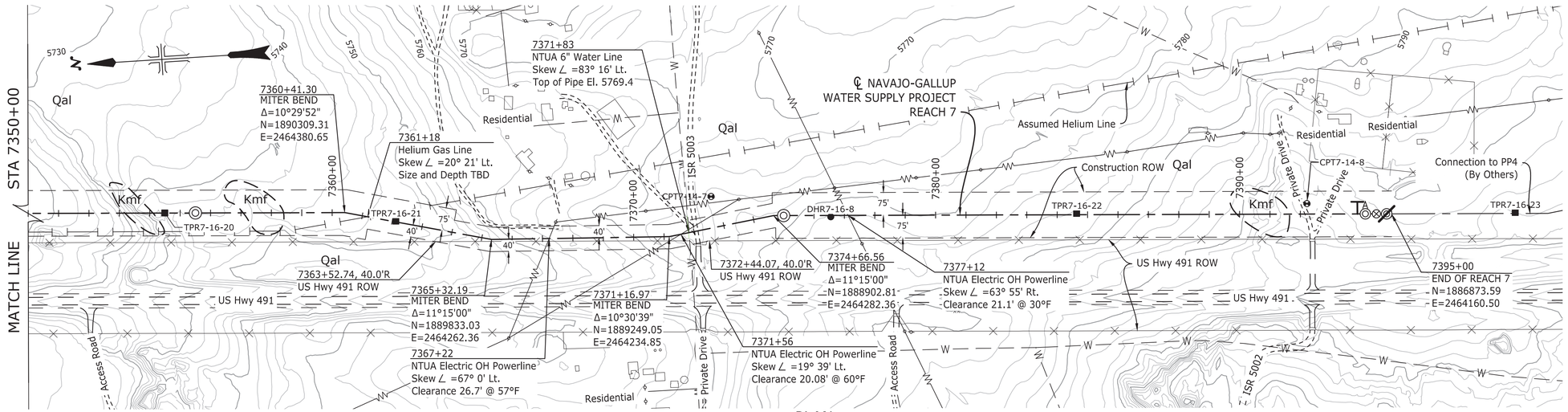

PLAN

NOTES

1. For General Notes, Symbols, Abbreviations, Pipe Classification, and Geology Note, see (60677).
2. For Helium Line requirements, see specifications.

OPEN-CUT ROAD CROSSINGS	
Station	Surfacing
7371+74 TO 7372+25	Maintained Road
7391+96 TO 7393+04	Maintained Road

CONSTRUCTION ROW			
Station		Width (Ft.)	
Start	End	Left	Right
7350+00	7361+24	75	75
7361+24	7364+01	75	40
7364+01	7374+74	40	40
7374+74	END	75	75

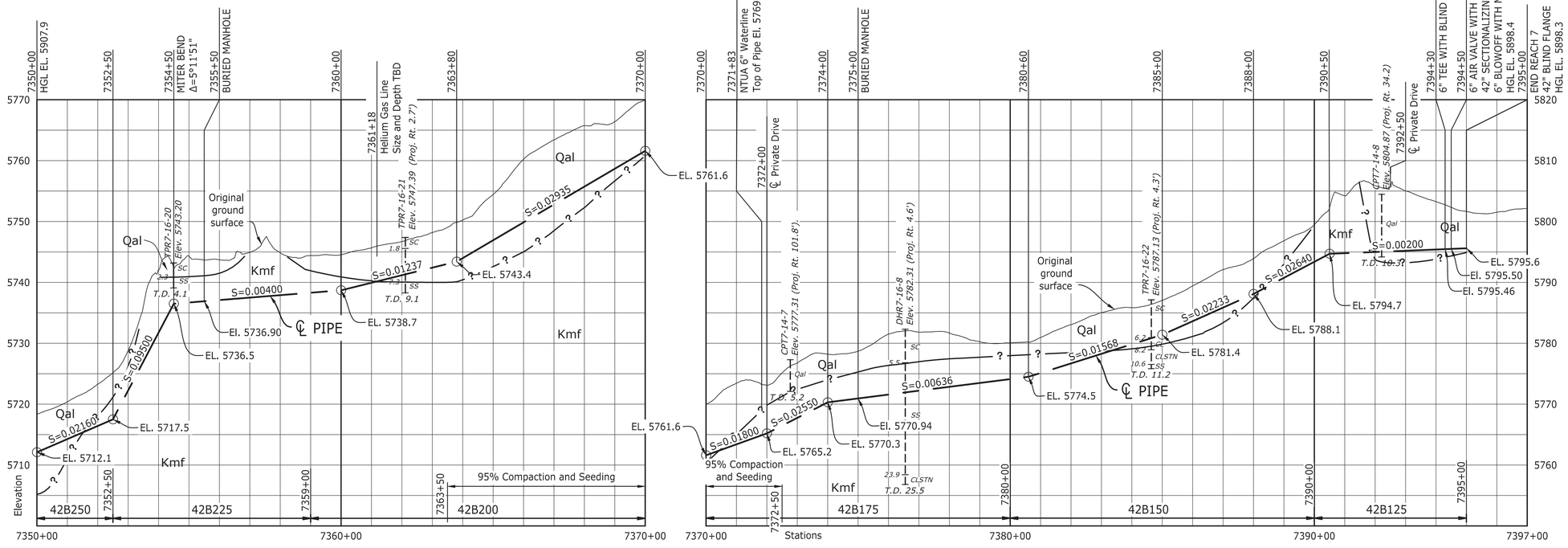

PROFILE

FOR INFORMATION ONLY

RECLAMATION
Managing Water in the West

ALWAYS THINK SAFETY

U.S. DEPARTMENT OF THE INTERIOR
BUREAU OF RECLAMATION
NAVAJO-GALLUP WATER SUPPLY PROJECT
NEW MEXICO

SAN JUAN LATERAL - BLOCK 4C - 8

REACH 7 LINE PIPE

REV NO	DATE	DESCRIPTION	BY
3	2019-09-19	Revised profile. Added 6" tee. Moved manhole, air valve, sectionalizing valve, blowoff. Labeled US Hwy 491 ROW crossings.	Clough, Nicholas W P.E.
2	2019-07-18	Label Road ISR 5003.	Clough, Nicholas W P.E.
1	2019-05-17	Added geology to plan view.	Clough, Nicholas W P.E.

M. Gemperline
DESIGNED
D. Kosakowski
DRAWN
Andrew Marner
CHECKED
Clough, Nicholas W P.E.
TECH. APPR.
Bowles, Linda M P.E.
APPROVED
PEER REVIEWER - Peer Reviewer

GEOLOGY

TECH. APPR. Chris Beyer
SUBMITTED Debbie Thornburg
APPROVED Paul Gardner Supervisory Geologist

DENVER, CO 2019-03-11

PLAN AND PROFILE

STA. 7350+00
TO
END

1695-D-60703

SHEET 8 OF 8

Released

LAST SAVED DATE 2019-09-19
LAST SAVED BY MLEAVITT

CAD SYSTEM AutoCAD 23.0s
CAD FILENAME 1695-D-60703-RD-8 OF 8.DWG

RECLAMATION
Managing Water in the West

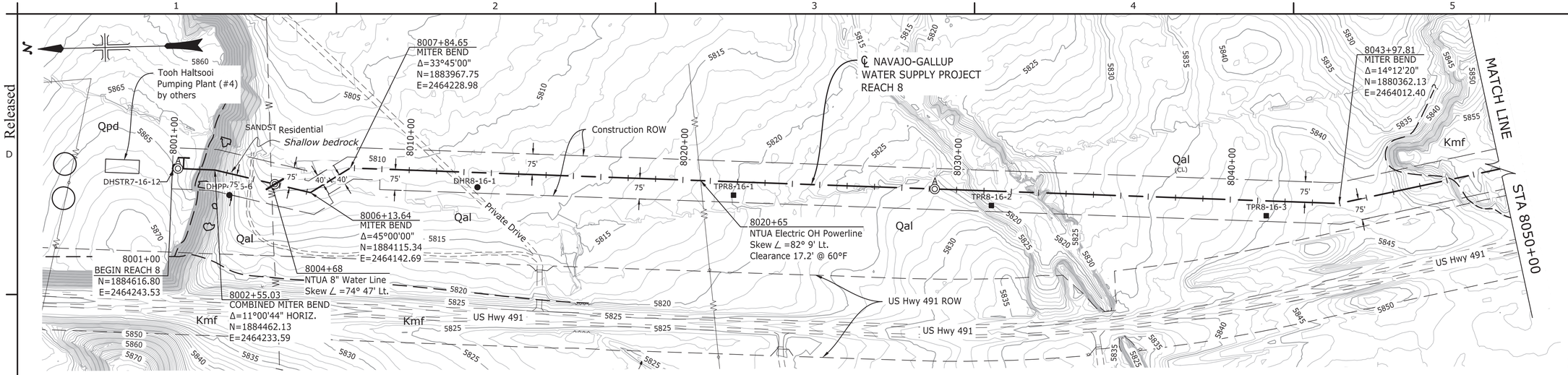

OPEN-CUT ROAD CROSSINGS	
Station	Surfacing
8003+85 to 8003+94	Non-Maintained Road
8011+35 to 8011+62	Maintained Road

CONSTRUCTION ROW			
Station		Width (Ft.)	
Start	End	Left	Right
8001+00.0	8005+82.6	75	75
8005+82.6	8006+65.2	40	75
8006+65.2	8008+07.0	40	40
8008+07.0	8008+94.4	75	40
8008+94.4	8050+00.0	75	75

PLAN

0 200' 400'

NOTES

1. For General Notes, Symbols, Abbreviations, Pipe Classification, and Geology Note, see (60677).
2. For wash crossing at Sta. 8031+70, see (60743).
3. For other wash crossing, see (60736).
4. Steep pipe anchor block is required at Sta. 8002+03, see (60727).
5. For steep pipe from Sta. 8001+00 to Sta. 8004+80 CLSM is required for embedment and 85% backfill compaction as directed by OGR. Joints to be restrained per Specification 33 11 10 - Pipeline General Requirements.

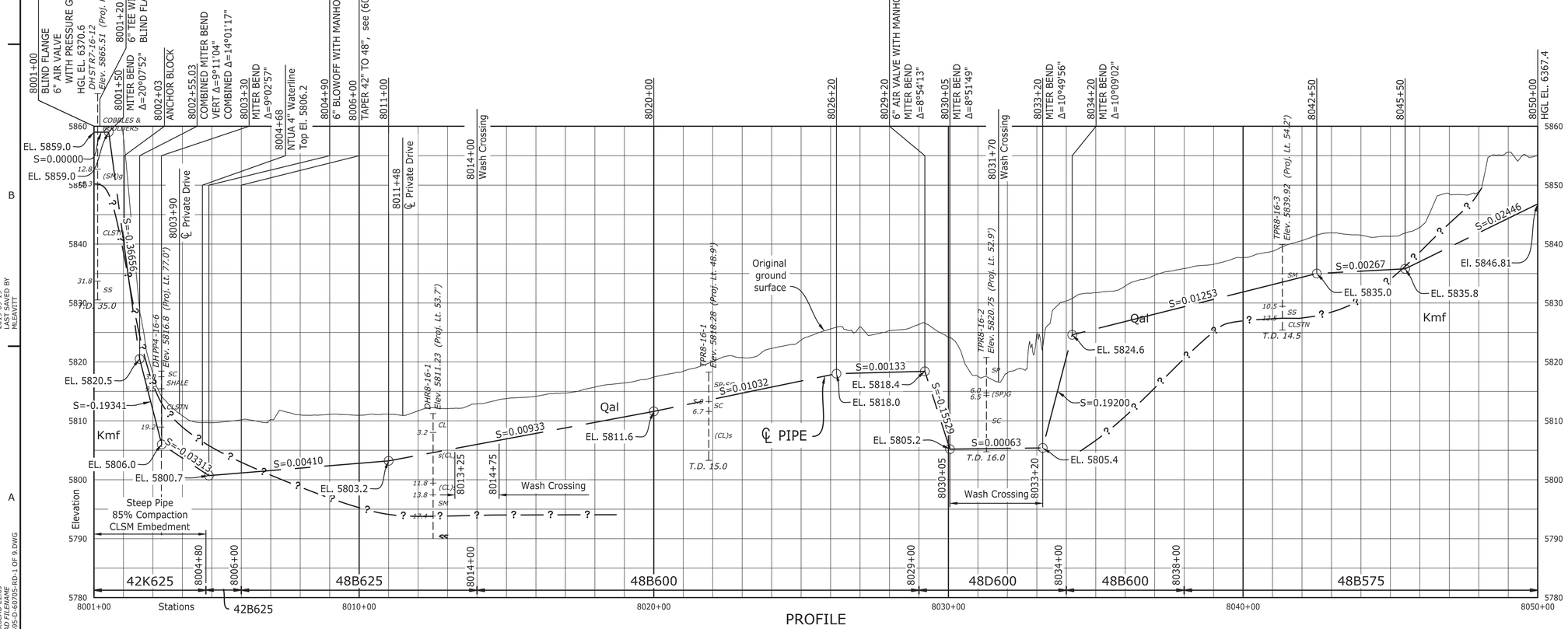

PROFILE

FOR INFORMATION ONLY

ALWAYS THINK SAFETY

U.S. DEPARTMENT OF THE INTERIOR
BUREAU OF RECLAMATION
NAVAJO-GALLUP WATER SUPPLY PROJECT
NEW MEXICO

SAN JUAN LATERAL - BLOCK 4C - 8

REACH 8 LINE PIPE

REV NO			
3	D	2019-09-19 Clough, Nicholas W P.E.	ADDED TEE WITH BLIND FLANGE AT 8001+20. REVISED PIPE TYPE.
2	D	2019-07-18 Clough, Nicholas W P.E.	MINOR REVISIONS.
1	D	2019-05-17 Clough, Nicholas W P.E.	MINOR REVISIONS.

M. LEAVITT DESIGNED
M. LEAVITT DRAWN
D. L. GESUNDHEIT CHECKED
Clough, Nicholas W P.E. TECH. APPR.
Bowles, Linda M P.E. APPROVED
PEER REVIEWER - Peer Reviewer

GEOLOGY
TECH. APPR. Chris Beyer
SUBMITTED Debby Thornburg
APPROVED Paul Gardner Supervisory Geologist

DENVER, CO 2019-03-13

PLAN AND PROFILE

BEGINNING TO STA. 8050+00

1695-D-60705

SHEET 1 OF 9

Released

LAST SAVED DATE 2019 09 19
LAST SAVED BY MLEAVITT

CAD SYSTEM AutoCAD 22.0s
CAD FILENAME 1695-D-60705-RD-1 OF 9.DWG

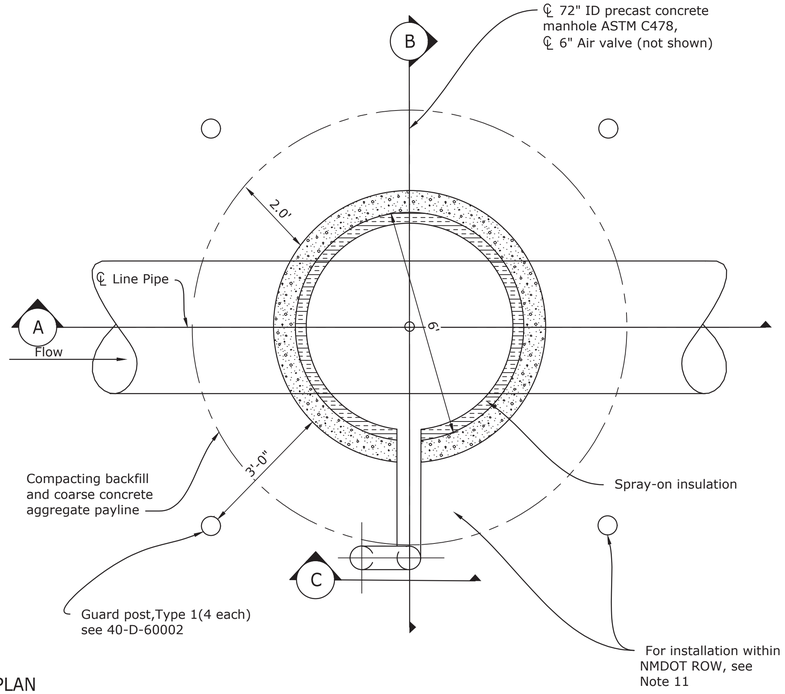

PLAN

WITH COVER REMOVED

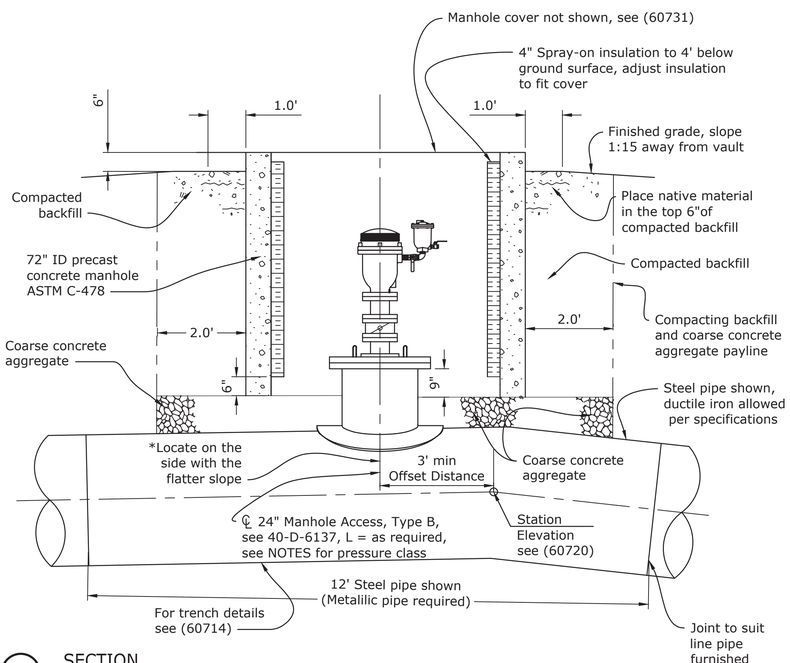

A SECTION

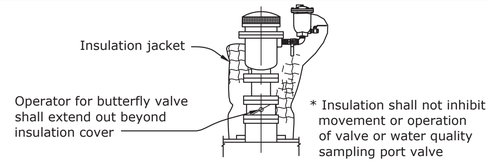

1 AIR VALVE INSULATION DETAIL

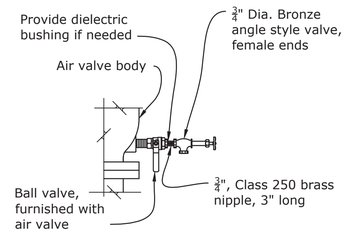

WATER QUALITY SAMPLING PORT DETAIL

For locations, see Air Valve Data Tables (60720)

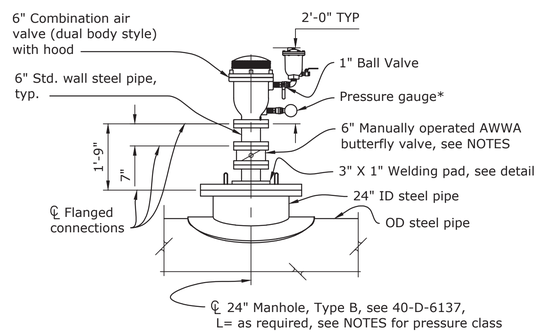

24" MANHOLE AND AIR VALVE ASSEMBLY

* Pressure gauge to be installed at air valve assembly for the following locations only:
Station 41976+00 (Reach 4C)
Station 6042+80 (Reach 6)
Station 7022+60 (Reach 7)
Station 8001+00 (Reach 8)

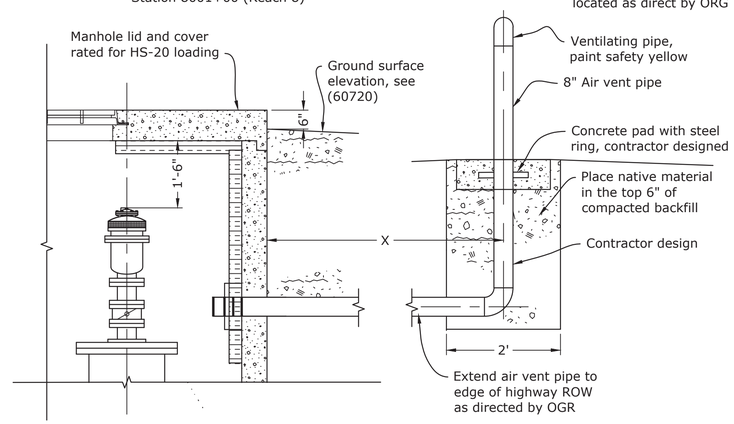

HIGHWAY ROW AIR VALVE DETAIL

See Note 11

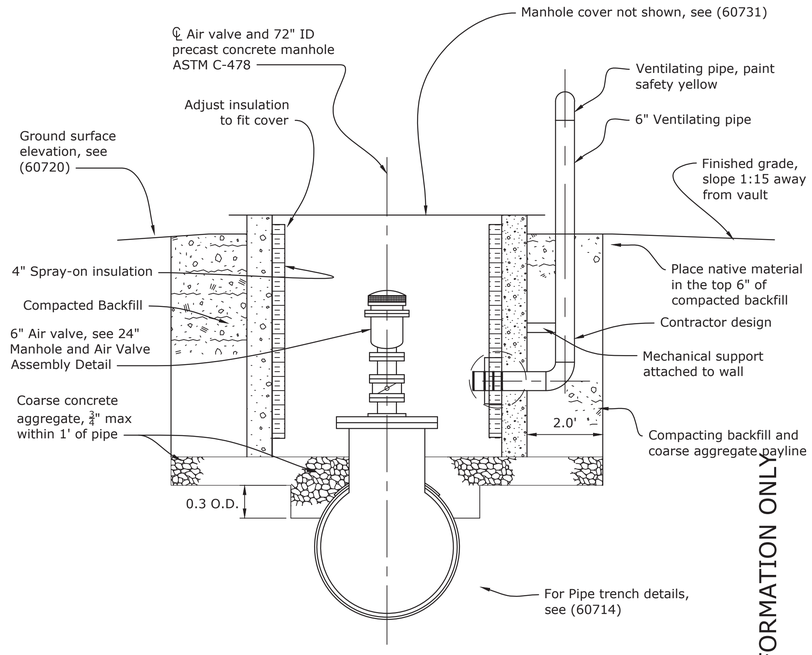

B SECTION

HIGHWAY ROW AIR VALVES		
STATION	"X" OFFSET LENGTH (FT) (Approximate)	MANHOLE
8260+00	40	YES
8264+50	60	YES
8315+60	30	YES
8315+60	30	YES
8343+00	30	YES
8344+60	30	NO

Offset distances are approximate and perpendicular to the line pipe. Vent pipe located as direct by ORG

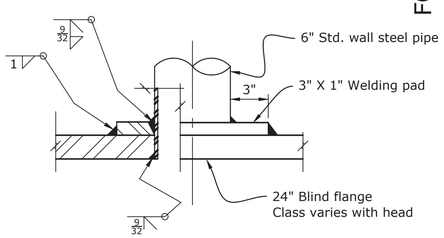

DETAIL

3" X 1" WELDING PAD

NOTES

1. For Air valve data table, see (60720)
2. Flanges should be AWWA class D when the head class is less than or equal to 346 ft, AWWA class F when the head class is greater than 346 ft and is less than or equal to 692 ft.
3. The butterfly valve shall be AWWA class 150B when the head class is less than or equal to 346 ft, AWWA class 250B when the head class is less than or equal to 577 ft. See specifications for butterfly valves with head classes greater than 577 ft.
4. The air valve inlet flange shall be ANSI B16.1 class 125 or ANSI B16.5 class 150 when the head class of the pipe is less than 346 ft and ANSI B16.1 class 250 or ANSI B16.5 class 350 for a head class of pipe greater than or equal to 692 ft.
5. The Manhole class shall be Class 150 when the head class of the pipe is less than 346 feet and Class 300 for a head class of pipe less than or equal to 692 ft.
6. Drawing not to scale.
7. Construct air valve vertical.
8. Earthwork compacted backfill and excavation minimums are shown. Actual slope will depend on soil conditions.
9. The height of 72" vertical pipe shall be high enough to allow enough clearance between the top of the air valve and the bottom of the insulation on the cover as per the air valve manufacturer's recommendations.
10. Match all mating flanges with highest rated flanges.
11. For manholes installed within NMDOT ROW, do not install guard posts. Design to withstand HS-20 loading.

FOR INFORMATION ONLY

RECLAMATION
Managing Water in the West

ALWAYS THINK SAFETY

U.S. DEPARTMENT OF THE INTERIOR
BUREAU OF RECLAMATION
NAVAJO-GALLUP WATER SUPPLY PROJECT
NEW MEXICO

SAN JUAN LATERAL - BLOCK 4C - 8

LINE PIPE

K. Whitesell
DESIGNED
K. Whitesell
DRAWN
D. Kosakowski
CHECKED
Clough, Nicholas W P.E.
TECH. APPR.
Bowles, Linda M P.E.
APPROVED
PEER REVIEWER - Peer Reviewer

DENVER, CO 2019-03-11

AIR VALVES WITH MANHOLES

SECTIONS AND DETAILS

1695-D-60722

SHEET 1

Released

LAST SAVED DATE 2019-03-12
LAST SAVED BY KWHITESELL

CAD SYSTEM AutoCAD 22.0s
CAD FILENAME 1695-D-60722-RD-1.DWG

Released

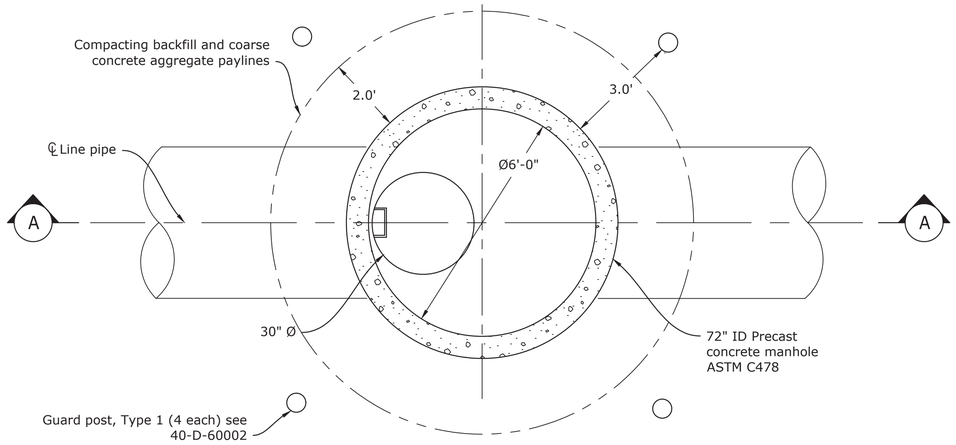

PLAN - 72" Ø MANHOLE

NOT TO SCALE

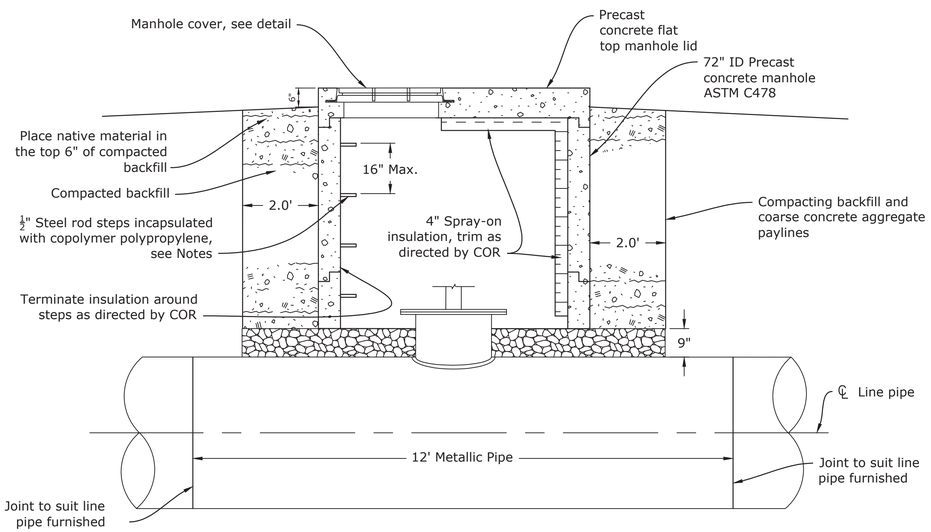

A SECTION

NOT TO SCALE

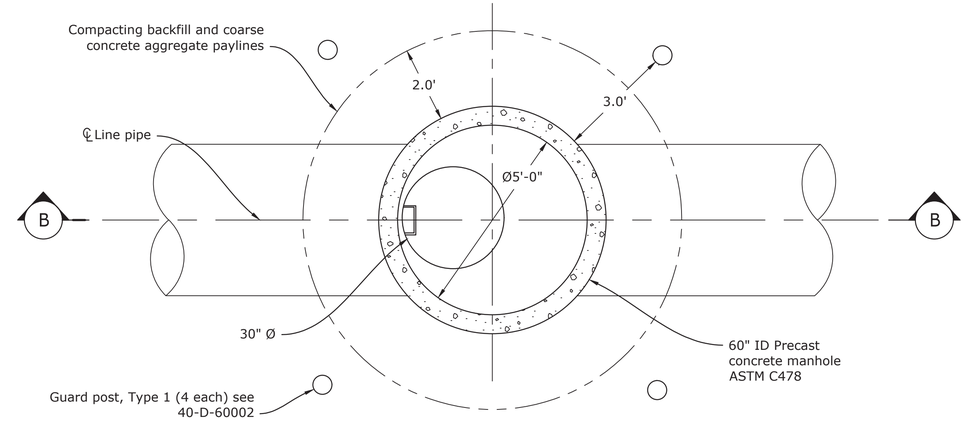

PLAN - 60" Ø MANHOLE

NOT TO SCALE

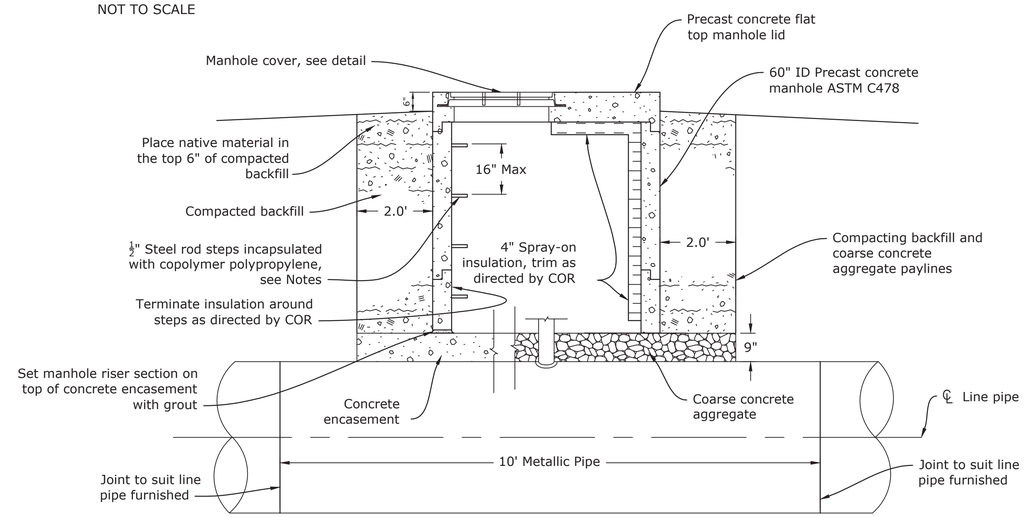

B SECTION

NOT TO SCALE

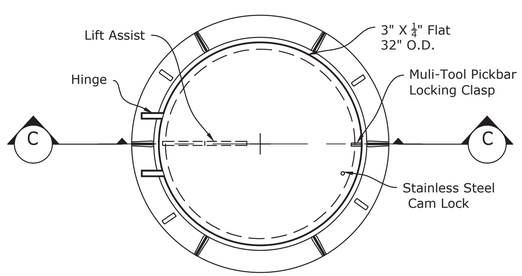

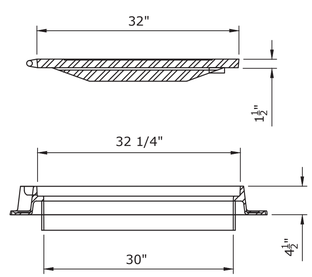

C SECTION

NOT TO SCALE

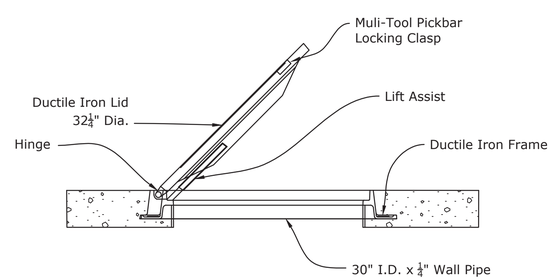

MANHOLE COVER DETAILS

NOT TO SCALE

NOTES

1. Manhole steps shall be made of ½-inch steel rod encapsulated with copolymer polypropylene or approved equal and shall conform to ASTM C478. Steps shall have minimum projections of 4-inches, spaced no more than 16" apart, minimum overall widths of 14 inches and anchored into the walls at least 3½ inches deep.
2. Manhole cover shall be provided with a lockable lid.
3. Drawing not to scale.

FOR INFORMATION ONLY

RECLAMATION
Managing Water in the West

ALWAYS THINK SAFETY

U.S. DEPARTMENT OF THE INTERIOR
BUREAU OF RECLAMATION
NAVAJO-GALLUP WATER SUPPLY PROJECT
NEW MEXICO

SAN JUAN LATERAL - BLOCK 4C - 8

LINE PIPE

K. Whitesell
DESIGNED
K. Whitesell
DRAWN
D. Kosakowski
CHECKED
Clough, Nicholas W P.E.
TECH. APPR.
Bowles, Linda M P.E.
APPROVED
PEER REVIEWER - Peer Reviewer

DENVER, CO 2019-03-11

PRECAST CONCRETE MANHOLES

PLANS, SECTIONS AND DETAILS

1695-D-60731

SHEET 1

LAST SAVED DATE 2019-03-11
LAST SAVED BY DKOSAKOWSKI

CAD SYSTEM AutoCAD 2020
CAD FILENAME 1695-D-60731-RD-1.DWG

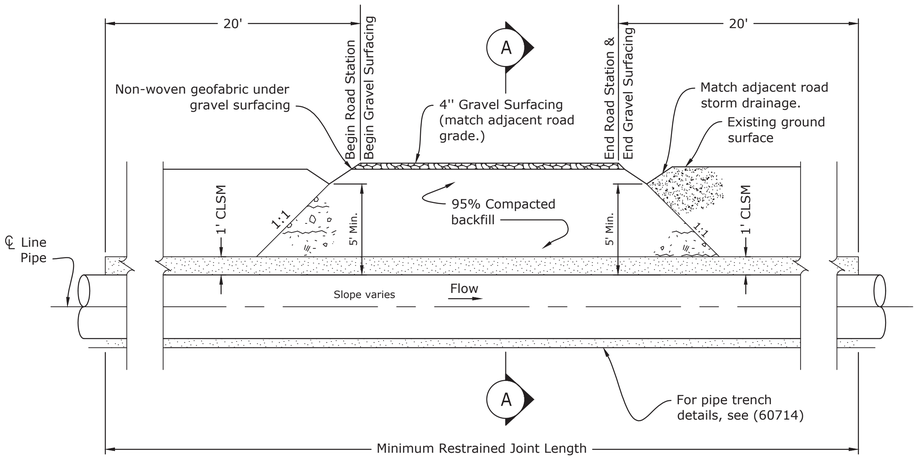

TYPICAL MAINTAINED ROAD DETAIL

NOT TO SCALE

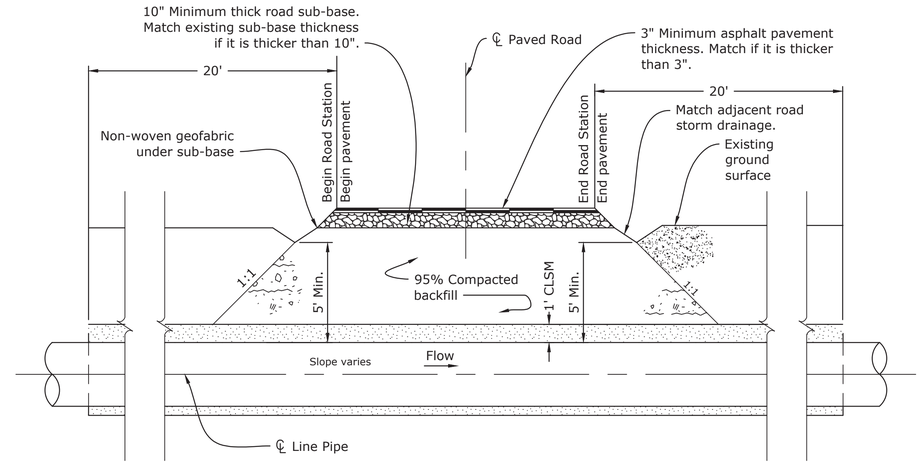

TYPICAL PAVED ROAD DETAIL

NOT TO SCALE

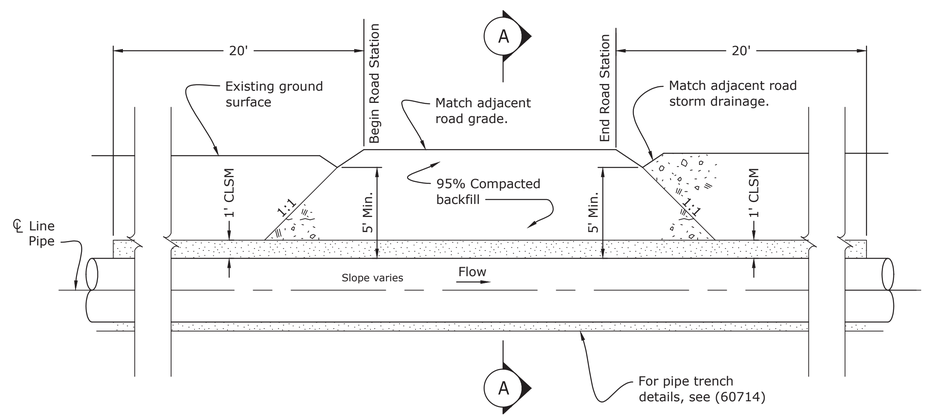

TYPICAL UNMAINTAINED ROAD DETAIL

NOT TO SCALE

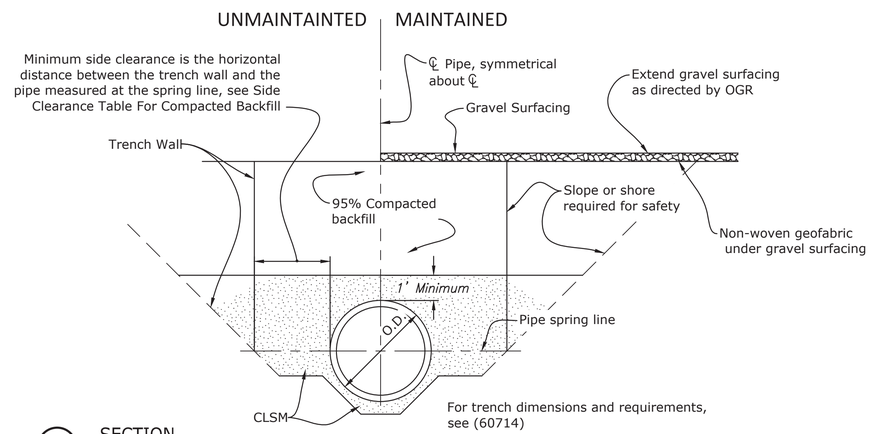

A SECTION

NOT TO SCALE

SIDE CLEARANCE TABLE FOR COMPACTED BACKFILL

Height of Cover	STEEL				DUCTILE IRON				PVC DR25		PVC DR32.5		PVC DR41		PVC DR51		HDPE	
	42"		48"		42"		48"		42"		42"		42"		42"		48"	
	Material Type 2	Material Type 3	Material Type 2	Material Type 3	Material Type 2	Material Type 3	Material Type 2	Material Type 3	Material Type 2	Material Type 3	Material Type 2	Material Type 3	Material Type 2	Material Type 3	Material Type 2	Material Type 3	Material Type 2	Material Type 3
<=10'	12	18	18	21	9	18	9	18	6	6	6	12	6	12	6	12	6	9
<=15'	21	27	24	30	18	27	21	30	6	12	9	18	12	18	12	18	6	15
<=20'	24	36	30	36	24	33	30	33	9	18	15	24	18	24	21	24	12	18

1. Backfill can not exceed 5' until CLSM embedment obtains an unconfined compressive strength of 30 psi.

Steel - Mortar lined, flexible coated.
Ductile Iron - Special thickness class.
HDPE - Only DR ratios 32.5, 26, 21, 19, and 17 allowed.

NOTES

1. For road surfacing material type, and stations, see Open Cut Crossings Table on Plans and Profiles (60679 to 60713).
2. For pipe trench Notes, see (60714)
3. When pipe alignment is in the roadway, details are similar.
4. Side slopes shown are perpendicular to road centerline.
5. Placement of gravel surfacing on other roads not identified on the plan and profile drawings may be directed by OGR.
6. Extend surfacing along roadway to construction ROW on each side of pipe centerline.
7. Avoid pipe joints under open cut roads.
8. Compact backfill to 95% density.
9. Asphalt concrete surface and base coarse aggregate dimensions are approximate, match existing conditons as directed by OGR.

FOR INFORMATION ONLY

Released

RECLAMATION
Managing Water in the West

ALWAYS THINK SAFETY

U.S. DEPARTMENT OF THE INTERIOR
BUREAU OF RECLAMATION
NAVAJO-GALLUP WATER SUPPLY PROJECT
NEW MEXICO

SAN JUAN LATERAL - BLOCK 4C - 8

LINE PIPE

REV NO		
1	2019-05-17 Clough, Nicholas W P.E.	D Change title block from "Open Cut And Bored Sections" to "Open Cut Sections"

D. Kosakowski
DESIGNED
D. Kosakowski
DRAWN
D. Richards
CHECKED
Clough, Nicholas W P.E.
TECH. APPR.
Bowles, Linda M P.E.
APPROVED
PEER REVIEWER - Peer Reviewer

DENVER, CO 2019-03-11

TYPICAL ROAD CROSSING

OPEN CUT SECTIONS

1695-D-60733

SHEET 1

LAST SAVED DATE 2019-05-17
LAST SAVED BY KWHITESELL

CAD SYSTEM AutoCAD 2015
CAD FILENAME 1695-D-60733-RD-1.DWG

UNIFIED SOIL CLASSIFICATION
INCLUDING IDENTIFICATION AND DESCRIPTION

FIELD IDENTIFICATION PROCEDURES (Excluding particles larger than 3 inches and basing fractions on estimated weights)				GROUP SYMBOLS	TYPICAL NAMES	INFORMATION REQUIRED FOR DESCRIBING SOILS
COARSE GRAINED SOILS More than half of material is larger than No. 200 sieve size 12 (The No. 200 sieve size is about the smallest particle visible to the naked eye)	GRAVELS More than half of coarse fraction is larger than No. 4 sieve size (For visual classifications, the " size may be used as equivalent to the No. 4 sieve size)	CLEAN GRAVELS (Little or no fines)	Wide range in grain size and substantial amounts of all intermediate particle sizes.	GW	Well graded gravel's, gravel–sand mixtures; little or no fines	Give typical name; indicate approximate percentages of sand and gravel; max. size; angularity, surface condition, and hardness of the coarse grains; local or geologic name and other pertinent descriptive information, and symbol in parentheses.
			Predominantly one size or a range of sizes with some intermediate sizes missing.	GP	Poorly graded gravel's, gravel–sand mixtures; little or no fines	
		GRAVELS WITH FINES (Appreciable amount of fines)	Non–plastic fines (for identification procedures see ML below).	GM	Silty gravels, poorly graded gravel–sand–silt mixtures	
			Plastic fines (for identification procedures see CL below).	GC	Clayey gravels, poorly graded gravel–sand–clay mixtures	For undisturbed soils add information on stratification, degree of compactness, cementation, moisture conditions and drainage characteristics.
	SANDS More than half of coarse fraction is smaller than No. 4 sieve size (For visual classifications, the " size may be used as equivalent to the No. 4 sieve size)	CLEAN SANDS (Little or no fines)	Wide range in grain sizes and substantial amounts of all intermediate particle sizes.	SW	Well graded sands, gravely sands; little or no fines	
			Predominantly one size or a range of sizes with some intermediate sizes missing.	SP	Poorly graded sands, gravely sands; little or no fines	EXAMPLE:– Silty Sand, gravely; about 20% hard, angular gravel particles ½ – inch maximum size; rounded and subangular sand grains coarse to fine; about 15% non–plastic fines with low dry strength; well compacted and moist in place; alluvial sand; (SM).
		SANDS WITH FINES (Appreciable amount of fines)	Non–plastic fines (for indentification procedures see ML below).	SM	Silty sands, poorly graded sand–silt mixtures	
			Plastic fines (for identification procedures see CL below).	SC	Clayey sands, poorly graded sand–clay mixtures	
FINE GRAINED SOILS More than half of material is smaller than No. 200 sieve size (The No. 200 sieve size is about the smallest particle visible to the naked eye)	IDENTIFICATION PROCEDURES ON FRACTION SMALLER THAN No 40 SIEVE SIZE					
		DRY STRENGTH (Crushing Characteristics)	DILATANCY (Reaction to skaking)	TOUGHNESS (Consistency near Plastic Limit)		
	SILTS AND CLAYS Liquid limit less than 50	None to slight	Quick to slow	None	ML	Inorganic silty and very fine sands, rock flour, silty or clayey fine sands with slight plasticity
		Medium to high	None to very slow	Medium	CL	Inorganic clays to low to medium plasticity, gravely clays, sandy clays, silty clays, lean clays
		Slight to medium	Slow	Slight	OL	Organic silts and organic silt–clays of low plasticity
	SILTS AND CLAYS Liquid limit greater than 50	Slight to medium	Slow to none	Slight to medium	MH	Inorganic silts, micaceous or diatomaceous fine sandy or silty soils, elastic silts
		High to very high	None	High	CH	Inorganic clays of high plasticity, fat clays
		Medium to high	None to very slow	Slight to medium	OH	Inorganic clays of medium to high plasticity
HIGHLY ORGANIC SOILS		Readily identified by color, odor, spongy feel and frequently by fibrous texture.			PT	Peat and other highly organic soils

Give typical name; degree and character of plasticity, amount and maximum size of coarse grains; color in wet condition, odor in any, local or geologic name, and other pertinent descriptive information; and symbol in parentheses.

For undisturbed soils add information on structure, stratification, consistency in undisturbed and remolded states. Moisture and drainage conditions.

EXAMPLE:– Clayey Silt, brown; slightly plastic. small percentage of fine sand. numerous vertical root holes, firm and dry in place, loess, (ML).

LABORATORY CLASSIFICATION CRITERIA

Use grain size curve identifying the fractions as given under field identification

Determine percentages of gravel and sand from grain size curve. Depending on percentage of fines (fraction smaller than No. 200 sieve size) coarse grained soils are classified as follows:

Less than 5% GW, GP, SW, SP
More than 12% GW, GC, SW, SC
5% to 12% Bordering cases requiring use of dual symbols.

$C_V = \frac{D_{60}}{D_{10}}$ Greater than 4; $C_C = \frac{(D_{30})2}{D_{10}\ Dep}$ Between one and 3	
Not meeting all gradation requirements for GW	
Atterberg limits below "A" line or PI less than 4	Above "A" line with PI between 4 and 7 are borderline cases requiring use of dual symbols.
Atterberg limits above "A" line with PI greater than 7	
$Cv = \frac{D\ 60}{D\ 10}$ Greater than 6; $Cc = \frac{(D\ 30)2}{D\ 10\ Dep}$ Between one and 3	
Not meeting all gradation requirements for SW	
Afterberg limits below "A" line or PI less than 4	Above "A" line with PI between 4 and 7 are borderline cases requiring use of dual symbols.
Afterberg limits above "A" line with PI greater than 7	

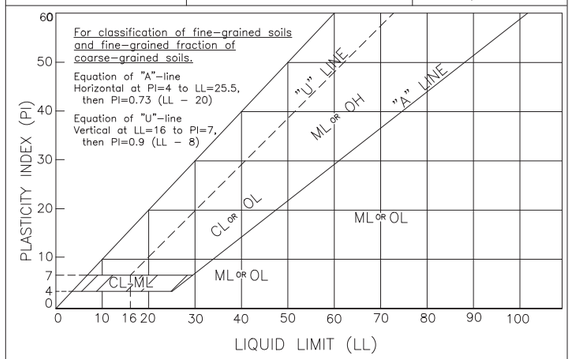

FOR LABORATORY CLASSIFICATION OF FINE GRAINED SOILS

* Boundary classifications: – Soils processing characteristics of two groups are designated by combinations of group symbols for Example GW–GC, well graded gravel mixture with clay binder
* All sieve sizes on this chart are US standard.

FIELD IDENTIFICATION PROCEDURES FOR FINE GRAINED SOILS OR FRACTIONS

These procedures are to be performed on the minus No. 40 sieve size particles, in for field classification purposes, screening is not intended, simply remove by hand the coarse particles that interfere with the tests.

DILATANCY (Reaction to shaking)

After removing particles larger than No 40 sieve sieve, prepare a pat striking vigorously against the other of moist soil with a volume of about one–half cubic inch. Add enough water if necessary to make the soil soft but not sticky.

Place the pot in the open palm of one hand and shake horizontally, hand several times. A positive reaction consists of the appearance of water on the surface of the pot which changes to a livery consistency and becomes glossy. When the sample is squeezed between the fingers, the water and gloss disappear from the surface, the pot stiffens, and finally it cracks or crumbles. The rapidity of appearance of water during shaking and of its disappearance during squeezing assist in identifying the character of the times in a soil.

Very fine clean sands give the quickest and most distinct reaction whereas a plastic clay has no reaction inorganic silts, such as a typical rock flour, show a moderately quick reaction.

DRY STRENGTH (Crushing Characteristics)

After removing particles larger than No. 40 sieve size, mold a pot of soil to the consistency of putty, adding water if necessary. Allow the pot to dry completely by oven, sun, or air drying and then test its strength by breaking and crumbling between the fingers. This strength is a measure of the character and quantity of the colloidal fraction contained in the soil. The dry strength increases with increasing plasticity.

High dry strength is characteristic for clays of the CH group A typical inorganic silt possesses only very slight dry strength Silty fine sands and silts have about the same slight dry strength, but can be distinguished by the feel when powdering the dried specimen. Fine sand feels gritty whereas a typical silt has the smooth feel of flour.

Letter symbols in the logs, are group symbols of the Unified soil classification system based on field indent. Copies of Drawing No. 103–D–347, Unified Soil Classification, may be obtained on request office of Director of Design and Construction. Bureau of Reclamation, Denver, Colorado R0225.

TOUGHNESS (Consistency near plastic limit)

After removing particles larger than No. 40 sieve size, a specimen of soil about one–half inch cube in size is molded to the consistency of putty. If too dry, water must be added and if sticky, the specimen should be spread out in a thin layer and allowed to lose some moisture by evaporation. Then the specimen is rolled out by hand on a smooth surface or between the palms into a thread about one–eighth inch in diameter. The thread is then folded and rerolled repeatedly. During this manipulation, the moisture content is gradually reduced and the specimen stiffens, finally loses its plasticity, and crumbles when the plastic limit is reached.

After the thread crumbles, the pieces should be lumped together and a slight kneading action continued until the lump crumbles.

The tougher the thread near the plastic limit and the stiffer the lump when it finally crumbles, the more potent is the colloidal clay fraction in the soil weakness of the thread at the plastic limit and quick loss of coherence of the lump below the plastic limit indicate either inorganic clay of low plasticity, or materials such as kaolin – type clays and organic clays which occur below the A–line.

Highly organic clays have a very weak and spongy feel at the plastic limit.

ADOPTED BY – CORPS OF ENGINEERS AND BUREAU OF RECLAMATION 1952

REV NO		
2	2016-03-31 D C.F.S.	FIXED OFFICIAL RENDITION, FONT SPACING AND OTHER VISUAL ONLY ASPECTS.
1	2003– 12 –05 D – G.T.	REVISED PLASTICITY CHART. REDRAWN WITH AUTOCAD SOFTWARE.

DATE AND TIME PLOTTED 12-5-2003
PLOTTED BY Ray Dunbar

103–D–347

WEATHERING

FRESH (W1): Body of rock is not oxidized or discolored; fracture surfaces are not oxidized or discolored*; no separation of grain boundaries; no change of texture and no solutioning. Hammer rings when crystalline rocks are struck.

SLIGHTLY WEATHERED TO FRESH (W2):**

SLIGHTLY WEATHERED (W3): Discoloration or oxidation is limited to surface of, or short distance from fractures; some feldspar crystals are dull; fracture surfaces have minor to complete discoloration or oxidation; no visible separation of grain boundaries; texture preserved and minor leaching of soluble minerals may be present. Hammer rings when crystalline rocks are struck, body of rock is not weakened by weathering.

MODERATELY TO SLIGHTLY WEATHERED (W4):**

MODERATELY WEATHERED (W5): Discoloration or oxidation extends from fractures, usually throughout body of rock; ferromagnesian minerals are "rusty", feldspar crystals are "cloudy"; all fracture surfaces are discolored or oxidized; partial opening of grain boundaries visible; texture generally preserved, but soluble minerals may be mostly leached. Hammer does not ring when rock is struck, body of rock is slightly weakened.

INTENSELY TO MODERATELY WEATHERED (W6):**

INTENSELY WEATHERED (W7): Body of rock is discolored or oxidized throughout; all feldspars and ferromagnesian minerals are altered to clay to some extent. All fracture surfaces are discolored or oxidized, and friable; partial separation of grain boundaries, rock is friable; in situ disaggregation of granitics common in semi-arid regions; texture altered and leaching of soluble minerals may be complete. Rock has dull sound when struck with hammer; rock is weakened, usually can be broken with moderate to heavy manual pressure or by light hammer blow without reference to planes of weakness.

VERY INTENSELY WEATHERED (W8):**

DECOMPOSED (W9): Body of rock is discolored or oxidized throughout, but resistant minerals such as quartz may be unaltered; all feldspars and ferro-magnesian minerals are completely altered to clay; complete separation of grain boundaries (disaggregated), partial or complete remnant rock structure may be preserved, but resembles a soil.

NOTE: Weathering categories are established primarily for crystalline rocks and those with ferromagnesian minerals, weathering in various sedimentary rocks will not always fit the categories established – weathering categories may be modified for particular site conditions or alteration such as hydrothermal alteration. Where modified criteria are established, they should be identified and described.

* Characteristics of fracture surfaces do not include directional weathering along shears or faults and their associated fracture zones; for example a shear that carries weathering to great depths in a fresh rock mass would not require the whole rock mass to be classified as weathered.

** Combination descriptors are used when equal distribution of both weathering characteristics are present over significant intervals or where characteristics noted are "in between" the diagnostic characteristics.

DURABILITY INDEX

DURABILITY DESCRIPTOR	DESCRIPTIVE CRITERIA
DIØ	Rock specimen or exposure remains intact with no deleterious cracking after exposure longer than 1 year.
DI1	Rock specimen or exposure develops hairline cracking on surfaces within 1 month, but no disaggregation within 1 year of exposure.
DI2	Rock specimen or exposure develops hairline cracking on surfaces within 1 week, and/or disaggregation within 1 month of exposure.
DI3	Specimen or exposure may develop hairline cracks in 1 day and displays pronounced separation of bedding and/or disaggregation within 1 week of exposure.
DI4	Specimen or exposure displays pronounced cracking and disaggregation within 1 day (24 hours) of exposure. Generally ravels and degrades to small fragments.

COLOR

The Munsell color system (Geologic Society of America Rock Color Chart) should be used. This system defines wet color by its hue, value, and chroma. Color symbols used (i.e., 5 YR 5/6 may be included).

SEDIMENTARY AND PYROCLASTIC ROCK PARTICLE SIZES

Size in mm	Sedimentary Rounded, subrounded, subangular		Pyroclastic	
	Particle or fragment	Lithified product	Fragment	Lithified product
256	Boulder	Boulder conglomerate	Block[a] or Bomb[b]	Volcanic[a] breccia or Volcanic[b] agglomerate
64	Cobble	Cobble conglomerate		
4	Pebble	Pebble conglomerate	Lapilli	Lapillistone and Lapilli tuff
2	Granule	Granule conglomerate		
1	Very coarse sand	Sandstone (Very coarse, coarse, medium, fine, or very fine)	Coarse ash	Coarse tuff
0.5	Coarse sand			
0.25	Medium sand			
0.125	Fine sand			
0.0625	Very fine sand			
0.00391	Silt	Siltstone/ Shale	Fine ash	Fine tuff
	Clay	Claystone Shale		

(a) Broken from previous igneous rock, block shaped (angular to subangular).
(b) Solidified from plastic material while in flight, rounded clasts.

IGNEOUS AND METAMORPHIC ROCK TEXTURE

TEXTURE DESCRIPTOR	AVERAGE GRAIN DIAMETER
VERY COARSE GRAINED OR PEGMATITIC	>10 mm [>3/8 in]
COARSE GRAINED	5–10 mm [3/16 –3/8 in]
MEDIUM GRAINED	1–5 mm [1/32 –3/16 in]
FINE GRAINED	0.1–1 mm [0.004 – 1/32 in]
APHANITIC (Cannot be seen with the unaided eye)	<0.1 mm [<0.004 in]

ADDITIONAL TEXTURAL ADJECTIVES

PIT (pitted) – pinhole to 0.03 ft [3/8 in] (<1 to 10 mm) openings.

VUG (vuggy) – Small openings (usually lined with crystals) ranging in diameter from 0.03 ft [3/8 in] to 0.33 ft [4 in] (10 to 100 mm).

CAVITY – An opening larger than 0.33 ft [4 in] (100 mm), size descriptions are required, and adjectives such as small, large, etc., may be used.

HONEYCOMBED – If numerous enough that only thin walls separate individual pits or vugs, this term further describes the preceding nomenclature to indicate cell-like form.

VESICLE (vesicular) – Small openings in volcanic rocks of variable shape and size formed by entrapped gas bubbles during solidification.

BEDDING FOLIATION OR FLOW TEXTURE

DESCRIPTORS	THICKNESS/SPACING
MASSIVE	Greater than 10 ft (>3 m)
VERY THICKLY (bedded, foliated or banded)	3 to 10 ft (1 to 3 m)
THICKLY	1 to 3 ft (300 mm to 1 m)
MODERATELY	0.3 to 1 ft (100 to 300 mm)
THINLY	0.1 to 0.3 ft (30 to 100 mm)
VERY THINLY	0.03 [3/8 in] to 0.1 ft (10 to 30 mm)
LAMINATED (Intensely foliated or banded)	Less than 0.03 ft [3/8 in] (<10 mm)

BEDROCK HARDNESS/STRENGTH

EXTREMELY HARD (H1): Core, fragment or exposure cannot be scratched with knife or sharp pick; can only be chipped with repeated heavy hammer blows.

VERY HARD (H2): Cannot be scratched with knife or sharp pick. Core or fragment breaks with repeated heavy hammer blows.

HARD (H3): Can be scratched with knife or sharp pick with difficulty (heavy pressure). Heavy hammer blow required to break specimen.

MODERATELY HARD (H4): Can be scratched with knife or sharp pick with light or moderate pressure. Core or fragment breaks with moderate hammer blow.

MODERATELY SOFT (H5): Can be grooved 1/16 inch (2 mm) deep by knife or sharp pick with moderate or heavy pressure. Core or fragment breaks with light hammer blow or heavy manual pressure.

SOFT (H6): Can be grooved or gouged easily by knife or sharp pick with light pressure, can be scratched with fingernail. Breaks with light to moderate manual pressure.

VERY SOFT (H7): Can be readily indented, grooved or gouged with fingernail, or carved with a knife. Breaks with light manual pressure.

Any bedrock unit softer than H7, Very Soft, is to be described using USBR 5005-86 (visual classification of soils) consistency characteristics.

REV NO		
1	3-8-00 D - P. M. R.	CONVERTED ORIGINAL DRAWING 40-D-6493 TO ACAD, CHANGED DWG. NO., MINOR REVISIONS.

ALWAYS THINK SAFETY

UNITED STATES
DEPARTMENT OF THE INTERIOR
BUREAU OF RECLAMATION

GEOLOGY FOR DESIGN & SPECIFICATIONS

STANDARD DESCRIPTORS AND DESCRIPTIVE CRITERIA FOR ROCK

GEOLOGY NOMENCLATURE COMMITTEE CHECKED
DRAWN TECH. APPROVAL
APPROVED PEER REVIEWER

CADD SYSTEM	CADD FILENAME	DATE AND TIME PLOTTED
AutoCAD Rel. 12 c4	40-D-7022.DWG	MAY 10, 2000 09:20
DENVER, COLORADO	MARCH 8, 2000	40-D-7022

JUL 1 8 2007
1 2 2003

DISCONTINUITY TERMINOLOGY

DISCONTINUITY – A collective term used for all structural breaks in geologic materials which usually are unhealed and have zero or low tensile strength. Discontinuities also may be healed and exhibit high tensile strength. Discontinuities comprise fractures (including joints), planes of weakness, shears/faults, and shear/fault zones. Contacts between various units also may be considered discontinuities.

FRACTURE – A term used to describe any natural break in geologic material excluding shears and shear zones. Additional fracture terminology is provided below.

SHEAR – A structural break where differential movement has taken place along a surface or zone of failure by shear; characterized by striations, slickensides, gouge, breccia, mylonite, or any combination of these. Often direction, amount of displacement, and continuity may not be known because of limited exposures or observations.

FAULT – A shear with significant continuity which can be correlated between observations; occurs over a significant portion of a given site, foundation area, or region; or is a segment of a fault or fault zone defined in the literature. The designation of a shear as a fault or fault zone is a site-specific determination.

SHEAR/FAULT ZONE – A shear that is expressed in relative terms of width. The zone may consist of gouge, breccia, or many related faults or shears together with fractured and crushed rock between the shears and faults, or any combination of these. In the literature many fault zones simply are referred to as faults.

SHEAR-/FAULT-DISTURBED ZONE – An associated zone of fractures and/or folds adjacent to a shear or shear zone where the country rock has been subjected to only minor cataclastic action and may be mineralized. If adjacent to a fault or fault zone, the term is fault-disturbed zone. Occurrence, orientation, and areal extent of these phenomena depend upon depth of burial (pressure and temperature) during shearing, brittleness of materials, and the stress envelope.

FRACTURE TERMINOLOGY

EXAMPLES SHOWN FOR CORE, BUT APPLICABLE TO ANY OBSERVATION

JOINT (JT) – A relatively planar fracture along which there has been little or no shearing displacement.

FOLIATION JOINT (FJ) OR BEDDING JOINT (BJ) – a relatively planar fracture which is parallel to foliation or bedding along which there has been little or no shearing displacement.

BEDDING PLANE SEPARATION – A separation along bedding after extraction or exposure due to stress relief or slaking.

INCIPIENT JOINT (IJ) OR INCIPIENT FRACTURE (IF) – A joint or fracture which does not continue through the specimen or at least is not seen with the naked eye. However, when the specimen is wetted, and then allowed to dry, the joint or fracture trace is evident. When core is broken, it breaks along an existing plane.

RANDOM FRACTURE (RF) – A natural break which does not belong to a joint set, and which exhibits a generally rough, very irregular, nonplanar surface.

MECHANICAL BREAK (MB) – A break due to drilling, blasting, or handling. Mechanical breaks parallel to bedding or foliation are called Bedding Breaks (BB) or Foliation Breaks (FB), respectively. Recognizing mechanical breaks may be difficult. The absence of oxidation, staining, or mineral fillings, and often a hackly or irregular surface are clues for recognition.

FRACTURE ZONE (FZ) – Numerous, very closely spaced intersecting fractures. Often fragmented core cannot be fitted together.

METHOD OF MEASURING DIP OF PLANAR DISCONTINUITIES, FOLIATION, AND BEDDING IN CORE

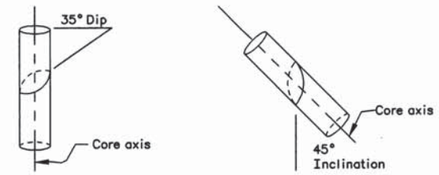

1. Vertical hole – true dip is measured and reported.
2. Angle hole – true dip usually not known; angle is measured from core axis and is called inclination.

ROCK QUALITY DESIGNATION (RQD)

EXAMPLE SHOWN FOR CORE, BUT APPLICABLE TO ANY LINEAR OBSERVATION

$$RQD = \frac{\text{Sum of length of solid core pieces} > 0.33 \text{ ft [4 in] (100 mm) long}}{\text{Length of the run in feet (mm)}} \times 100$$

Expressed as percent (%)

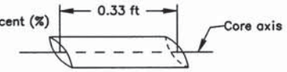

FRACTURE FREQUENCY

FRACTURE FREQUENCY – The number of natural fractures occurring within a base length or core run. The number of fractures is divided by the length and is reported as fractures per foot or fractures per meter. Expressed as 3/m or 6/ft.

FRACTURE DENSITY

FRACTURE DENSITY – Based on the spacing of all natural fractures in an exposure or core recovery lengths in boreholes; excludes mechanical breaks, shears, and shear zones; however, shear-disturbed zones (fracturing outside the shear) are included. Descriptors for fracture density apply to all rock exposures such as tunnel walls, dozer trenches, outcrops, or foundation cut slopes and inverts, as well as boreholes. Descriptive criteria presented below are based on borehole cores where lengths are measured along the core axis. For other exposures the criterium is distance measured between fractures (size of blocks).

UNFRACTURED (FD0): No fractures.

VERY SLIGHTLY FRACTURED (FD1): Core recovered mostly in lengths greater than 3 feet (1 m).

SLIGHTLY TO VERY SLIGHTLY FRACTURED (FD2) *

SLIGHTLY FRACTURED (FD3): Core recovered mostly in lengths from 1 to 3 feet (300 to 1000 mm) with few scattered lengths less than 1 foot (300 mm) or greater than 3 feet (1000 mm).

MODERATELY TO SLIGHTLY FRACTURED (FD4) *

MODERATELY FRACTURED (FD5): Core recovered mostly in 0.3- to 1.0-foot (100- to 300-mm) lengths with most lengths about 0.6 foot (200 mm).

INTENSELY TO MODERATELY FRACTURED (FD6) *

INTENSELY FRACTURED (FD7): Lengths average from 0.1 to 0.3 foot (30 to 100 mm) with scattered fragmented intervals. Core recovered mostly in lengths less than 0.3 foot (100 mm).

VERY INTENSELY TO INTENSELY FRACTURED (FD8) *

VERY INTENSELY FRACTURED (FD9): Core recovered mostly as chips and fragments with a few scattered short core lengths.

* Combinations of fracture densities (e.g., Very Intensely to Intensely Fractured or Moderately to Slightly Fractured) are used where equal distribution of both fracture density characteristics are present over a significant interval or exposure, or where characteristics are "in between" the descriptor definitions.

FRACTURE SPACING

JOINT SET, OR FRACTURE SPACING DESCRIPTOR	TRUE SPACING
EXTREMELY WIDELY SPACED (SP1)	Greater then 10 ft (>3 m)
VERY WIDELY SPACED (SP2)	3 to 10 ft (1 to 3 m)
WIDELY SPACED (SP3)	1 to 3 ft (300 mm to 1 m)
MODERATELY SPACED (SP4)	0.3 to 1 m (100 to 300 mm)
CLOSELY SPACED (SP5)	0.1 to 0.3 ft (30 to 100 mm)
VERY CLOSELY SPACED (SP6)	less than 0.1 ft (<30 mm)

FRACTURE CONTINUITY

CONTINUITY DESCRIPTOR	DISCONTINUITY LENGTH
DISCONTINUOUS (C1)	Less than 3 ft (<1 m)
SLIGHTLY CONTINUOUS (C2)	3 to 10 ft (1 to 3 m)
MODERATELY CONTINUOUS (C3)	10 to 30 ft (3 to 10 m)
HIGHLY CONTINUOUS (C4)	30 to 100 ft (10 to 30 m)
VERY CONTINUOUS (C5)	Greater than 100 ft (>30 m)

FRACTURE ENDS (JOINT SURVEYS)

FRACTURE ENDS DESCRIPTOR	DESCRIPTIVE CRITERIA
EØ	Zero ends leave the exposure (both ends can be seen).
E1	One end of the fracture terminates in the exposure (one end can be seen).
E2	Neither fracture end terminates in the exposure (neither end can be seen).

FRACTURE OPENNESS OR FILLING THICKNESS

FILLING THICKNESS DESCRIPTOR	THICKNESS/OPENNESS	OPENNESS DESCRIPTOR
CLEAN (TØ)	No film or coating.	
	No visible separation.	TIGHT (OØ)
VERY THIN (T1)	Less than 0.003 ft [1/32 in] (<1 mm).	SLIGHTLY OPEN (O1)
MODERATELY THIN (T2)	0.003 to 0.01 ft [1/32 to 1/8 in] (1 to 3 mm).	MODERATELY OPEN (O2)
THIN (T3)	0.01 to 0.03 ft [1/8 to 3/8 in] (3 to 10 mm).	OPEN (O3)
MODERATELY THICK (T4)	0.03 ft [3/8 in] to 0.1 ft (10 to 30 mm).	MODERATELY WIDE (O4)
THICK (T5)	Greater than 0.1 ft (>30 mm). Actual thickness or openings recorded.	WIDE (O5)

FRACTURE MOISTURE CONDITIONS

MOISTURE DESCRIPTOR	DESCRIPTIVE CRITERIA
M1	The fracture is dry. It is tight or filling (where present) is of sufficient density or composition to impede waterflow. Waterflow along the fracture does not appear possible.
M2	The fracture is dry with no evidence of previous waterflow. Waterflow appears possible.
M3	The fracture is dry, but shows evidence of waterflow such as staining, leaching and/or vegetation.
M4	The fracture or filling (where present) is damp, but no free water is present.
M5	The fracture shows seepage. It is wet with occasional drops of water.
M6	The fracture emits a continuous flow (estimate flow rate) under low pressure. Filling materials (where present) may show signs of leaching or piping.
M7	The fracture emits a continuous flow (estimate flow rate) under moderate to high pressure. Water is squirting and/or filling material (where present) may be substantially washed out.

FRACTURE ROUGHNESS

Refers to small-scale asperities of surfaces, not large-scale undulations or waviness.

STEPPED (R1): Near-normal steps and ridges occur on the fracture surface.
ROUGH (R2): Large, angular asperities can be seen.
MODERATELY ROUGH (R3): Asperities are clearly visible and fracture surface feels abrasive.
SLIGHTLY ROUGH (R4): Small asperities on the fracture surface are visible and can be felt.
SMOOTH (R5): No asperities, smooth to the touch.
POLISHED (R6): Extremely smooth and shiny.

FRACTURE SURFACE AND/OR FILLING ALTERATION AND HARDNESS

Descriptors for weathering or alteration of fracture surfaces and fracture fillings (excluding soil materials) are the same as those used for weathering and alteration of rock.

Descriptors for hardness/strength of fillings and/or fracture surfaces are the same as those presented for hardness of rock and consistency of soils.

DISCONTINUITY HEALING

TOTALLY HEALED (HL1) – All fragments bonded, discontinuity is completely healed or recemented to a degree at least as hard as surrounding rock.

MODERATELY HEALED (HL3) – Greater than 50 percent of fractured or sheared material, discontinuity surfaces or filling is healed or recemented; and/or strength of healing agent is less hard than surrounding rock.

PARTLY HEALED (HL5) – Less than 50 percent of fractured or sheared material, discontinuity surface or filling is healed or recemented.

NOT HEALED (HL6) – Discontinuity surface, fractured zone, sheared material or filling is not healed or recemented, rock fragments or filling (if present) held in place by their own angularity and/or cohesiveness.

SHEAR/FAULT DESCRIPTORS

SHEAR/FAULT GOUGE CONSISTENCY

DESCRIPTOR	DESCRIPTIVE CRITERIA (Similar to consistency of soils)
VERY HARD	Gouge cannot be broken with finger pressure; cannot be indented with fingernail.
HARD	Gouge can be broken with firm finger pressure; can be indented with fingernail; cannot be indented with thumb.
FIRM	Gouge can be easily crumbled; can be indented with thumb 1 to 5 mm.
SOFT	Gouge can be easily molded; can be penetrated with thumb 5 to 25 mm.
VERY SOFT	Gouge can be penetrated with thumb more than 25 mm.

SHEAR/FAULT MOISTURE DESCRIPTORS

The apparent moisture content of gouge is described as WET (visible free water); MOIST (damp, but no visible water); and DRY (absence of moisture, dusty, dry to the touch). Moisture descriptors M1 through M7 may be used to describe the shear or shear zone.

BRECCIA SHAPES

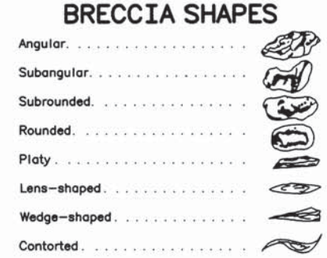

REV NO	DATE	DESCRIPTION
1	3-8-00 D-P. M. R.	CONVERTED ORIGINAL DRAWING 40-D-6499 TO ACAD, CHANGED DWG. NO., MINOR REVISIONS.

ALWAYS THINK SAFETY

UNITED STATES
DEPARTMENT OF THE INTERIOR
BUREAU OF RECLAMATION

GEOLOGY FOR DESIGN & SPECIFICATIONS

STANDARD DESCRIPTORS AND DESCRIPTIVE CRITERIA FOR DISCONTINUITIES

GEOLOGY NOMENCLATURE COMMITTEE CHECKED
DRAWN TECH. APPROVAL
APPROVED PEER REVIEWER

CADD SYSTEM	CADD FILENAME	DATE AND TIME PLOTTED
AutoCAD Rel. 12, c4 DENVER, COLORADO	40-D-7023.DWG MARCH 8, 2000	MAY 10, 2000 09:20

40-D-7023

JUN 12 2000

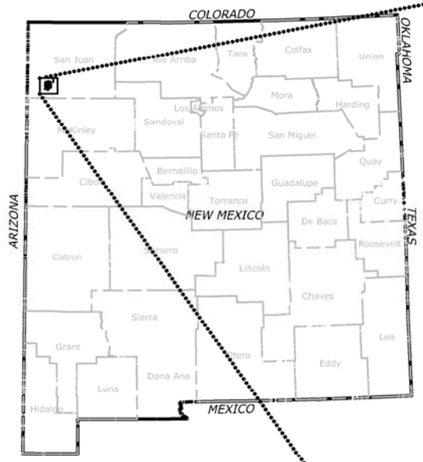

KEY MAP

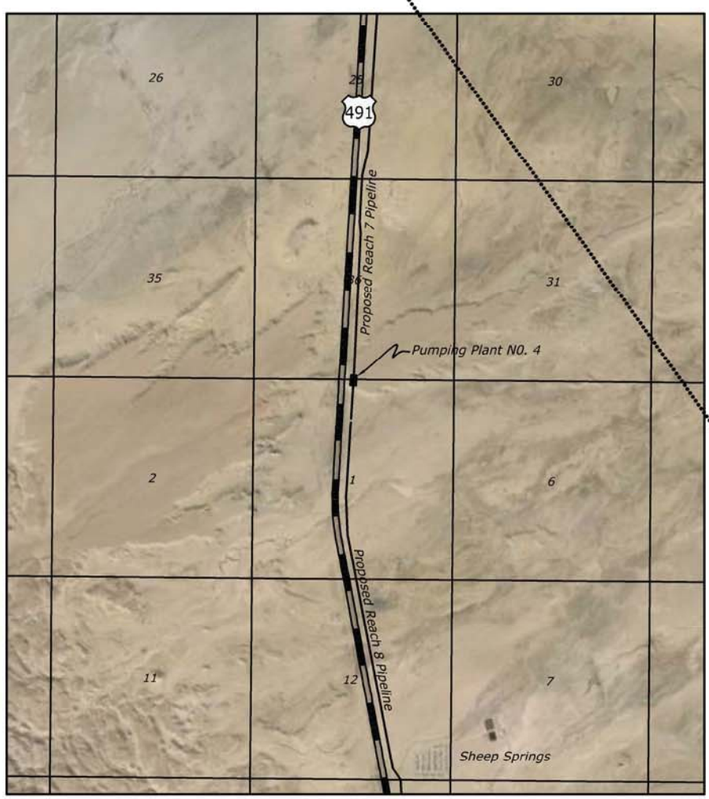

LOCATION MAP

0 2000 4000 8000 Feet

1:24000

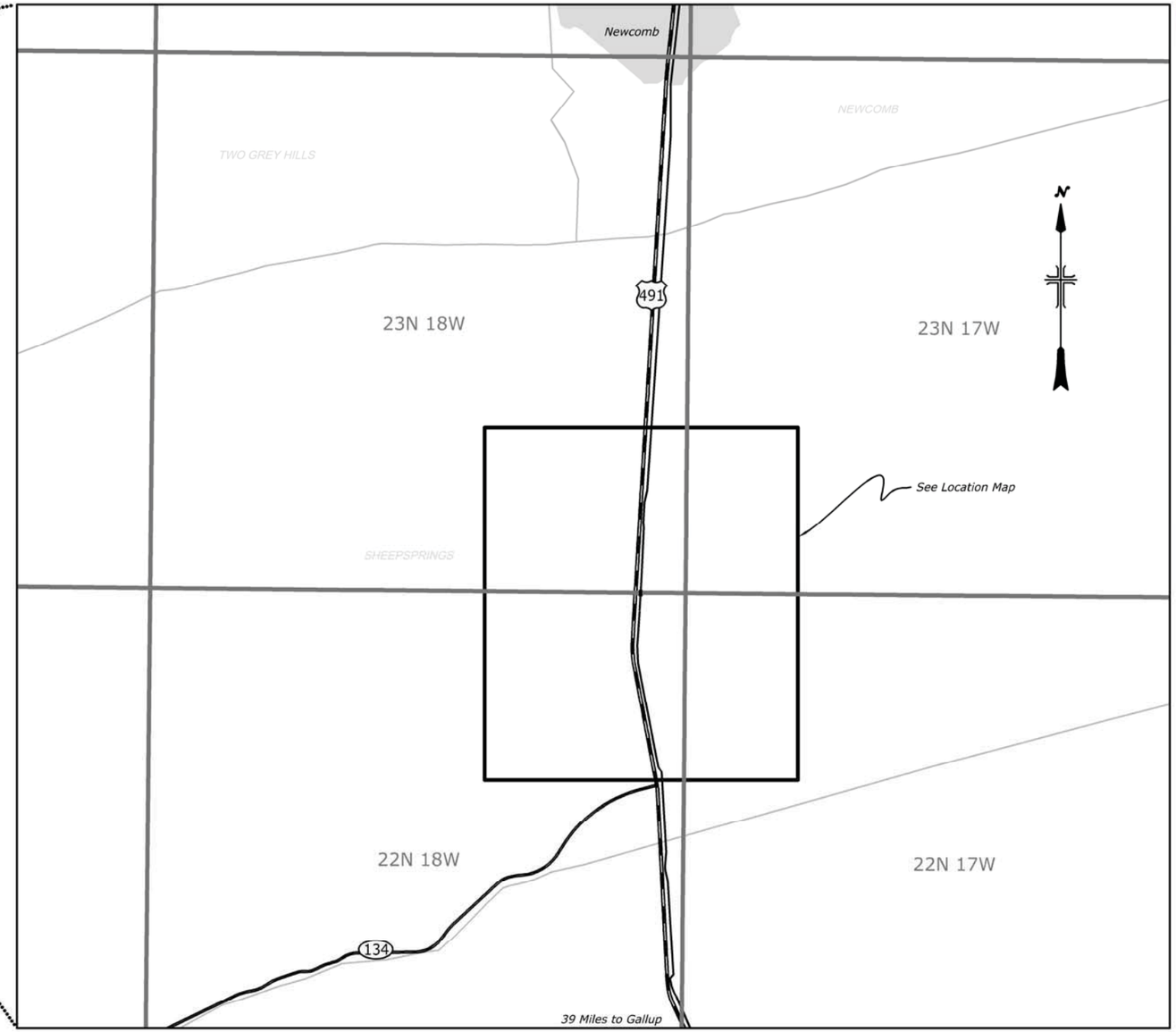

VICINITY MAP

0 4000 8000 16000 Feet

1:48000

LEGEND

- U.S. Highway
- State Highway
- Navajo Nation Chapter
- County Boundary Line
- Township, Range and Section Lines

RECLAMATION
Managing Water in the West

ALWAYS THINK SAFETY

U.S. DEPARTMENT OF THE INTERIOR
BUREAU OF RECLAMATION
NAVAJO-GALLUP WATER SUPPLY PROJECT
NEW MEXICO

SAN JUAN LATERAL

PUMPING PLANT NO. 4

D. THORNBURG
DESIGNED
D. THORNBURG
DRAWN
PAUL GARDNER
CHECKED
TECH. APPR.
APPROVED
ADMIN APPROVAL - TITLE
FARMINGTON, NM YYYY-MM-DD

LOCATION MAP

1695-529-60063

SHEET 1

DATE AND TIME PLOTTED
SEPTEMBER 26, 2016 13:09
PLOTTED BY
DTHORNBURG

CAD SYSTEM
AutoCAD Rel. 20.0s
CAD FILENAME
1695-529-60063-AD-1.DWG

GENERAL GEOLOGIC LEGEND STRATIGRAPHY

Qal — *Quaternary Alluvium (Qal)*

Quaternary Alluvium are soils that overlie bedrock in the valleys surrounding the investigation site of Pumping Plant 4. Alluvium sampled in the valley is visually classified as Clayey Sand (SC). Quaternary soils are generally fine grain sands with variable amounts of plastic to nonplastic fines and occasionally contain gravel or cobble. For more detail, see DHPP4-16-6 geologic log. The alluvium is derived from a variety of sources including slope wash, eolian and alluvial deposition as well as weathering and decomposition of in-place claystone bedrock. Quaternary Alluvium is used to describe surficial deposits regardless of origin.

Qpd — *Quaternary Pediment Deposits (Qpd)*

Pediment deposits are earth materials found on top of the sloped, erosional surface of the Cretaceous Menefee Formation within the project area. The pediment deposit is a veneer of alluvial material and consist of various amounts of clay and silt, sand, angular to rounded gravel and cobbles and often contain angular to rounded boulders. The material is generally described as Cobbles and Boulders with soils depending on composition. Lenses of fine grain soils range from Silty Sand (SM) to Silty Sand with Gravel (SM)g, Lean Clay (CL) and Sandy Lean Clay s(CL), Silt with Sand (ML)s and Sandy Silty Clay s(CL-ML), Silty Gravel with Sand (GM)s, Clayey Sand (SC) to Poorly Graded Sand with Silt (SP-SM) that may contain gravel. Material with oversize particles (greater than 3 inches) can be described using the USCS and are classified as Silty Sand with Gravel, Cobbles and Boulders (SM)gcb, Clayey Sand With Gravel, Cobbles and Boulders (SC)gcb, Poorly Graded Sand with Silt, Gravel, Cobbles and Boulders (SP-SM)gcb and Poorly Graded Gravel with Sand, Cobbles and Boulders (GP)scb. Material having a majority of oversize particles are referred to as Cobbles and Boulders. The gravel, cobbles and boulders are composed of hard sandstone with a trace of hard basalt, quartzite, chert and petrified wood. These deposits originate primarily from the Chuska Mountains west of the project area.

Kmf — *Cretaceous Menefee Formation (Kmf)*

The Cretaceous Menefee Formation at Pumping Plant 4 consists primarily of light to dark gray claystone with interbedded coal and shale intervals. Claystone is generally soft (H6) and moderately weathered (W5) but can be very soft (H7) and very intensely weathered (W8) to decomposed (W9). Claystone has carbonaceous laminations, can be thinly bedded and grades to shale and coal. The claystone can be classified as Lean Clay (CL) and as Fat Clay (CH) when it is processed through laboratory methods. The shale is brown to black and is generally moderately soft (H5) and slightly to moderately weathered (W4) but can be soft (H6). Shale is thinly bedded with coal laminations, grades to coal and is fissile and friable. The coal units encountered are dark brown to black, soft (H6) and moderately to slightly weathered (W4). Coal can be laminated to thinly bedded, is brittle and has a dull luster. Sandstone units are fine grain, brownish orange to gray in color and vary from hard (H3) to soft (H6). Weathering of the sandstone range from moderately weathered (W5) to slightly weathered (W3). Gypsum and iron oxide staining is present in most bedrock units sampled. The bedrock locally has a shallow dip toward the northeast.

GEOLOGIC EXPLANATION

DHSTR7-16-10 — *Drill hole location with identification number*

TPPP4-16-10 — *Test Pit location and Identification number*

Qpd / Kmf — *Geologic Unit Contact*

Qpd / Kmf — *Dashed where approximate*

? Qpd / Kmf ? — *Queried where inferred*

A A' — *Location and designation of Geologic Section*

Drill Hole or Test Pit on profile (dashed where projected)

GENERAL GEOLOGIC NOTES

Geologic standards and definitions used for rock quality and rock discontinuities are based on Bureau of Reclamation Engineering Geology Field Manual and drawing numbers 40-0-6493 and 40-0-6499.

Soil classification and descriptions are based on the Unified Soil Classification System (USCS) and Bureau of Reclamation procedures and guidelines as described in Geotechnical Branch Training Manuals Nos. 4, 5, 6, and Designations USBR 5000 (laboratory classification) and USBR 5005 (visual classification). These procedures are similar to ASTM D2487-11 and ASTM D2488-09A respectively. Interpretations shown on geologic profiles are based on Test Pit, Drill Hole, outcrop, and field mapping data.

Interpretations suggest general trends between data points and do not depict localized irregularities.

For the entire description of material, drilling or excavation method and conditions, exact locations of the hole, etc., see complete log.

BEDROCK ABBREVIATIONS:

SS- SANDSTONE
CLSTNE- CLAYSTONE

REFERENCE DRAWINGS

General Map.....1695-529-60095.
Location Map.....1695-529-60063.
Surface Geology and Location of Exploration.....1695-529-60057.
Geologic Sections.....1695-529-60083.

RECLAMATION
Managing Water in the West

ALWAYS THINK SAFETY

U.S. DEPARTMENT OF THE INTERIOR
BUREAU OF RECLAMATION
NAVAJO-GALLUP WATER SUPPLY PROJECT
NEW MEXICO

SAN JUAN LATERAL

PUMPING PLANT NO. 4

PAUL GARDNER — GEOLOGY
D. THORNBURG — DRAWN
PAUL GARDNER — CHECKED
Gilbert, Justin J — TECH. APPR.
Longwell, Barry D — APPROVED
ADMIN APPROVAL - Project Construction Engineer

FARMINGTON, NM 2016-10-03

GENERAL GEOLOGIC LEGEND, EXPLANATION, AND NOTES

1695-529-60086

SHEET 1

DATE AND TIME PLOTTED OCTOBER 3, 2016 13:59
PLOTTED BY DTHORNBURG

CAD SYSTEM AutoCAD Rel. 20.0s
CAD FILENAME 1695-529-60086-AD-1.DWG

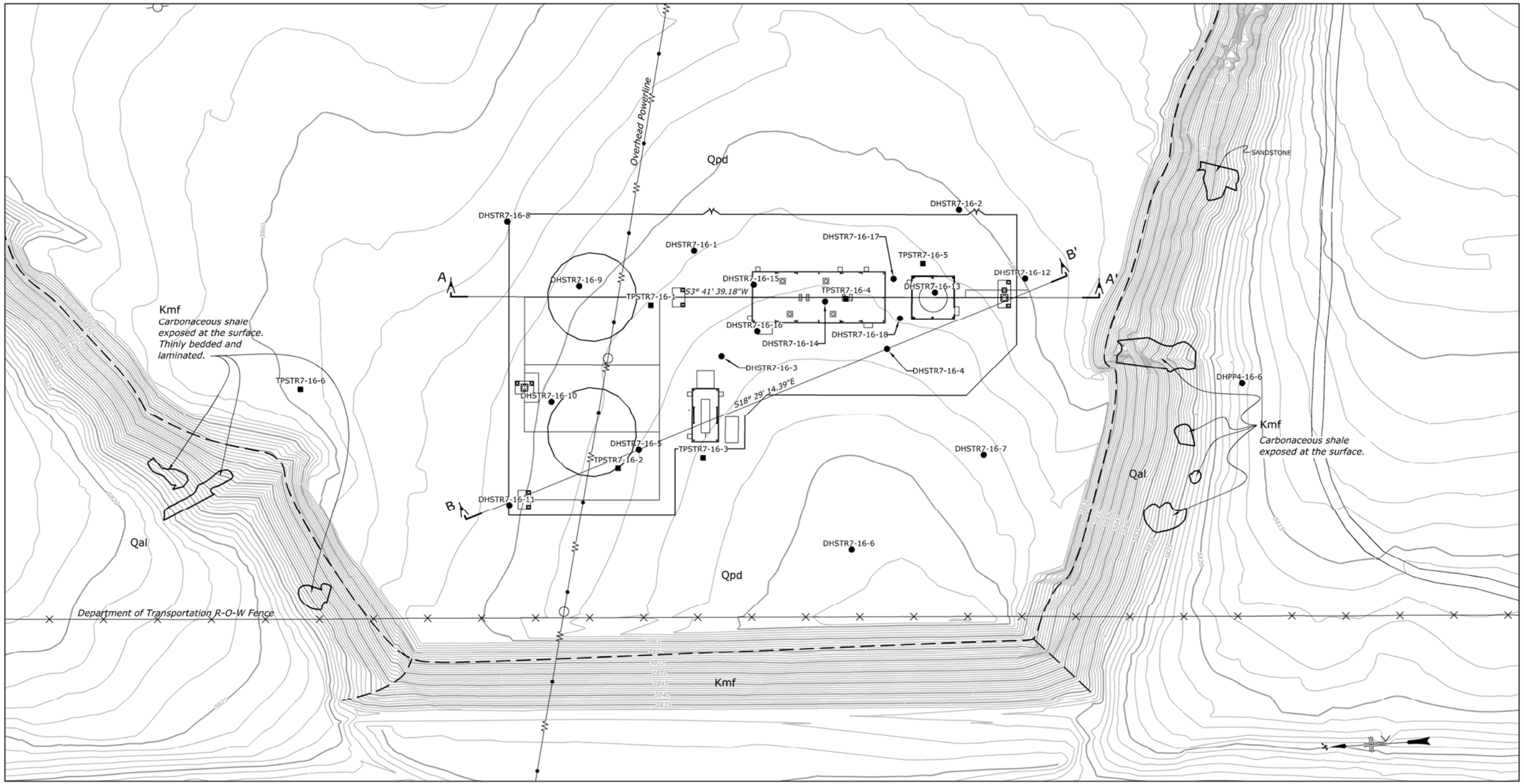

PLAN VIEW

0 50' 100'

GENERAL NOTES

1. Coordinates based on New Mexico State Plane West Zone, feet. (NAD83).
2. The Ground to New Mexico State Plane West Zone Grid conversion factor is 0.99972309.
3. Contour interval is 1 foot.

REFERENCE DRAWINGS

General Map.....1695-529-60095.
Location Map.....1695-529-60063.
General Geologic Legend, Explanation and Notes.....1695-529-60086.
Geologic Sections.....1695-529-60083.

RECLAMATION
Managing Water in the West

ALWAYS THINK SAFETY

U.S. DEPARTMENT OF THE INTERIOR
BUREAU OF RECLAMATION
NAVAJO-GALLUP WATER SUPPLY PROJECT
NEW MEXICO

SAN JUAN LATERAL

PUMPING PLANT NO. 4

PAUL GARDNER
DESIGNED
D. THORNBURG
DRAWN
PAUL GARDNER
CHECKED
Gilbert, Justin J
TECH. APPR.
Longwell, Barry D
APPROVED
ADMIN APPROVAL - Project Construction Engineer

FARMINGTON, NM 2016-10-03

SURFACE GEOLOGY AND LOCATION OF EXPLORATION

1695-529-60057

SHEET 1

DATE AND TIME PLOTTED
OCTOBER 3, 2016 1:1.17
PLOTTED BY
DTHORNBURG

CAD SYSTEM
AutoCAD Rel. 20.0s
CAD FILENAME
1695-529-60057-Ab-1.DWG

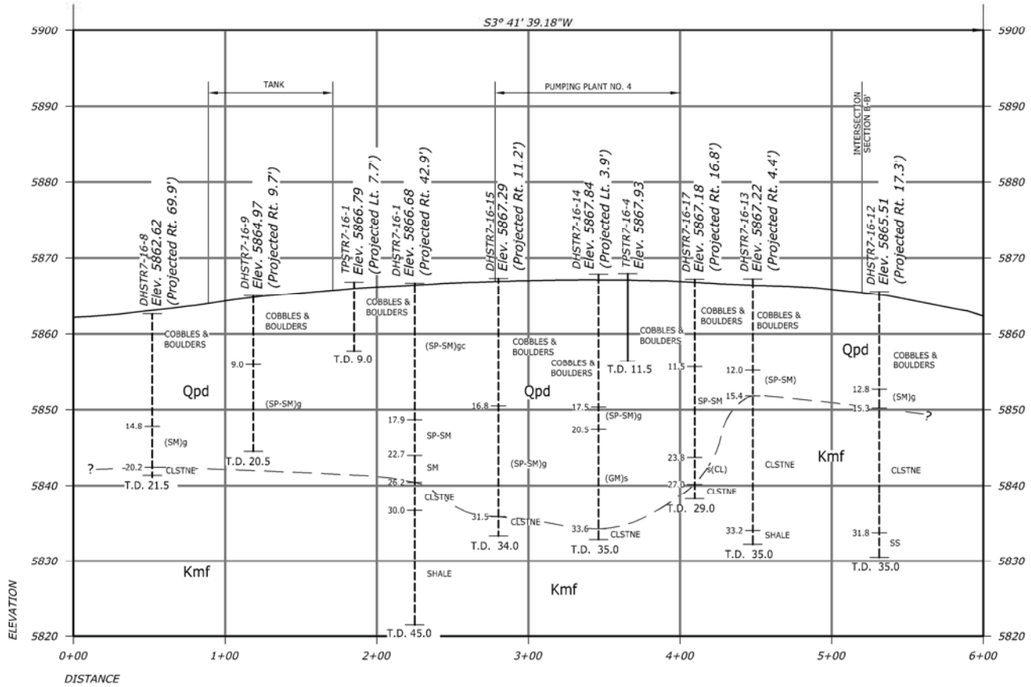

GEOLOGIC SECTION A-A'

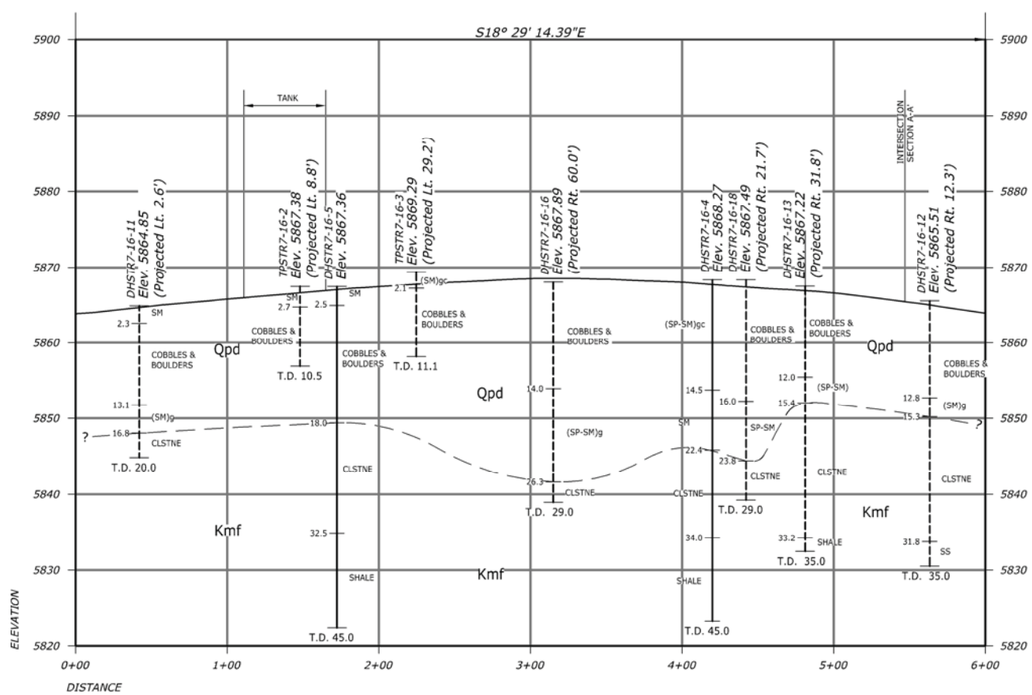

GEOLOGIC SECTION B-B'

REFERENCE DRAWINGS

General Map.....1695-529-60095.
Location Map .....1695-529-60063.
General Geologic Legend, Explanation and Notes .....1695-529-60086.
Surface Geology, Location of Explorations.....1695-529-60057.

RECLAMATION
Managing Water in the West

ALWAYS THINK SAFETY

U.S. DEPARTMENT OF THE INTERIOR
BUREAU OF RECLAMATION
NAVAJO-GALLUP WATER SUPPLY PROJECT
NEW MEXICO

SAN JUAN LATERAL

PUMPING PLANT NO. 4

PAUL GARDNER
GEOLOGY
D. THORNBURG
DRAWN
PAUL GARDNER
CHECKED
Gilbert, Justin J
TECH. APPR.
Longwell, Barry D
APPROVED
ADMIN APPROVAL - Project Construction Engineer

FARMINGTON, NM 2016-10-03

GEOLOGIC SECTIONS A-A' AND B-B'

1695-529-60083

SHEET 1

DATE AND TIME PLOTTED
OCTOBER 4, 2016 08:36
PLOTTED BY
DTHORNBURG

CAD SYSTEM
AutoCAD Rel. 20.0s
CAD FILENAME
1695-529-60083-Ab-1.DWG

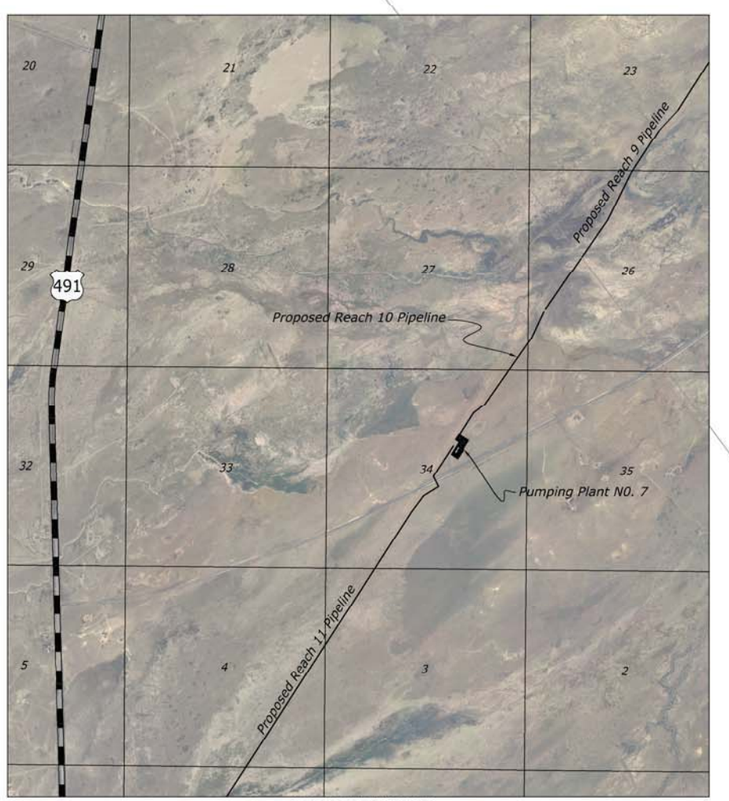

LOCATION MAP

0 4000 8000 Feet

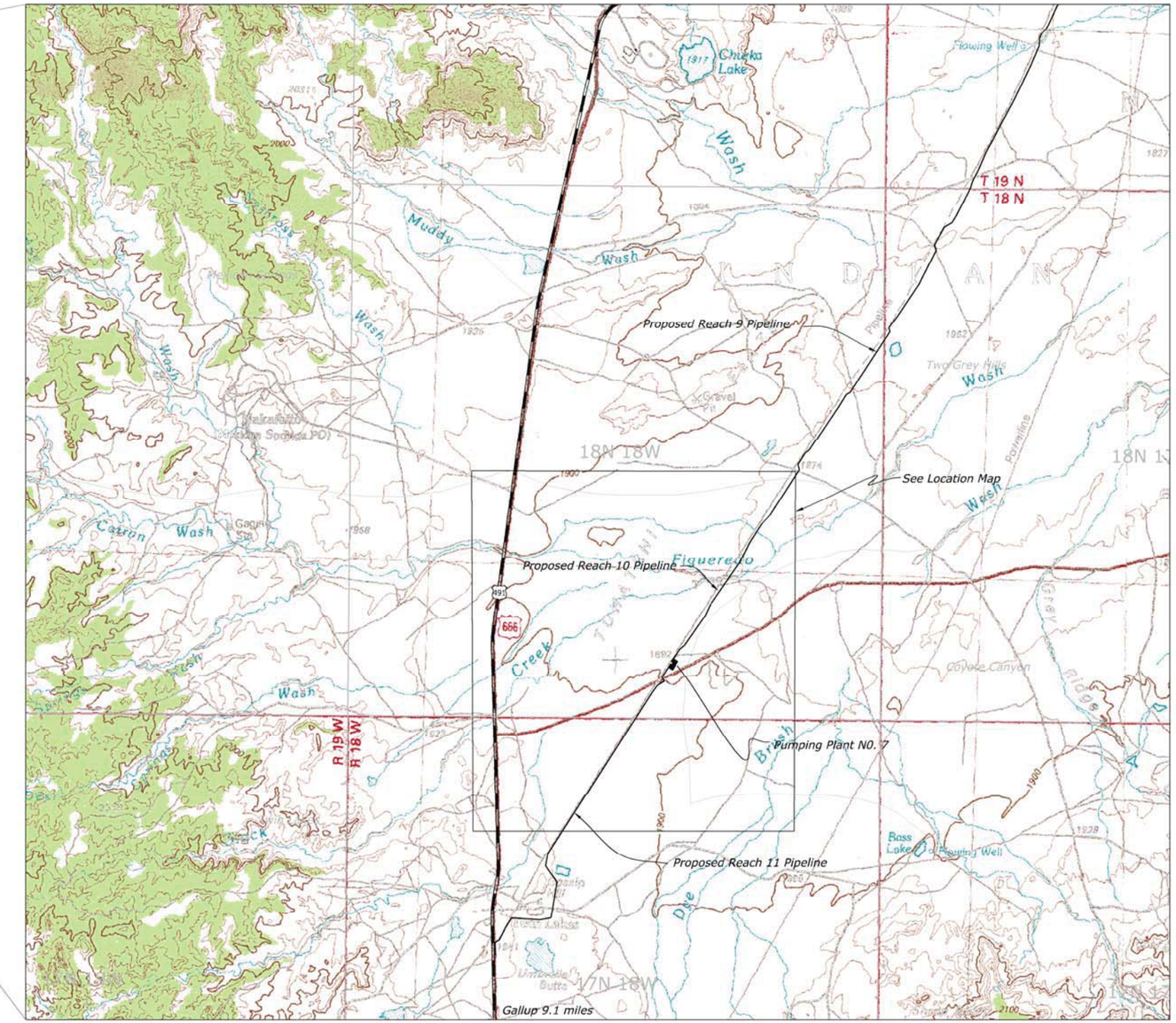

VICINITY MAP

0 8000 16000 Feet

LEGEND

- U.S. Highway
- State Highway
- Navajo Nation Chapter
- County Boundary Line
- Township, Range and Section Lines

RECLAMATION
Managing Water in the West

ALWAYS THINK SAFETY

U.S. DEPARTMENT OF THE INTERIOR
BUREAU OF RECLAMATION
NAVAJO-GALLUP WATER SUPPLY PROJECT
NEW MEXICO

SAN JUAN LATERAL

PUMPING PLANT NO. 7

DESIGNED
D. THORNBURG
DRAWN
PAUL GARDNER
CHECKED
TECH. APPR.
APPROVED
ADMIN APPROVAL: TITLE:
FARMINGTON, NM YYYY-MM-DD

LOCATION MAP

1695-529-60064

SHEET 1

DATE AND TIME PLOTTED
AUGUST 30, 2016 12:39
PLOTTED BY
DTHORNBURG

CAD SYSTEM
AutoCAD Rel. 20.0s
CAD FILENAME
1695-529-60064-R0-1.DWG

GENERAL GEOLOGIC EXPLANATION
STRATIGRAPHY

Qal *Quaternary Alluvium*

Quaternary alluvium deposits overlie bedrock at the investigation site of Pumping Plant 7. Alluvial soils range from Silty Sand (SM), to Clayey Sand (SC) to Sandy Lean Clay s(CL). Soils are generally fine grain sands with variable amounts of plastic to non-plastic fines. For more detail, see each specific geologic log. The alluvium is derived from a variety of sources including eolian and alluvial deposition as well as weathering and decomposition of in-place claystone and sandstone bedrock. Quaternary Alluvium is used to describe all surficial deposits regardless of origin.

Kmf *Cretaceous Menefee Formation*

The Cretaceous Menefee Formation consists primarily of light brown, fine-grained sandstone with inter-bedded claystone but can vary in color and grain size. The bedrock has a shallow dip toward the northeast. The sandstone can be decomposed (W9) but is generally moderately weathered (W5), moderately soft (H5) to soft (H6) and slightly fractured at the surface. The same sandstone unit, when excavated below ground level, can be moderately hard (H4) and slightly weathered (W3). A hard, iron rich, calcareous sandstone is occasionally inter-bedded within the softer sandstone units. This inter-bedded sandstone is hard (H3) and can only be broken by a heavy hammer blow. The claystone is sandy, light brown to dark gray in color and is generally laminated to thinly bedded. The claystone ranges from moderately to slightly weathered (W4), intensely to moderately weathered (W6) and soft (H6) to very soft (H7). The claystone often grades to siltstone and occasionally becomes fissile, grading to shale. Claystone intervals encountered ranged from a few inches to 5 feet in thickness.

GENERAL GEOLOGIC LEGEND

DHPP7-16-1 — *Drill hole location, designation and number.*

TPPP7-16-1 — *Test pit location, designation and number.*

Geologic Unit Contact

Qal / Kmf — *Dashed where approximate*

? Qal / Kmf ? — *Queried where inferred*

A A' — *Location and designation of geologic section.*

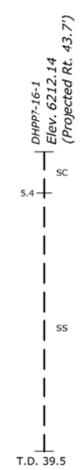

Drill hole or Test Pit on profile (dashed where projected)

GENERAL GEOLOGIC NOTES

Geologic standards and definitions used for rock quality and rock discontinuities are based on Bureau of Reclamation Engineering Geology Field Manual and drawing numbers 40-0-6493 and 40-0-6499.

Soil classification and descriptions are based on the Unified Soil Classification System (USCS) and Bureau of Reclamation procedures and guidelines as described in Geotechnical Branch Training Manuals Nos. 4, 5, 6, and Designations USBR 5000 (laboratory classification) and USBR 5005 (visual classification). These procedures are similar to ASTM D2487-11 and ASTM D2488-09A respectively. Interpretations shown on geologic profiles are based on Test Pit, Drill hole, outcrop, and field mapping data.

Interpretations suggest general trends between data points and do not depict localized irregularities.

For the entire description of material, drilling or excavation method and conditions, exact locations of the hole, etc., see complete log.

BEDROCK ABBREVIATIONS:

SS- SANDSTONE
CLSTNE- CLAYSTONE

REFERENCE DRAWINGS

General Map..... .....1695-529-60091.
Location Map.....1695-529-60064.
Surface Geology and Location of Exploration.....1695-529-60059.
Geologic Sections.....1695-529-60084.

RECLAMATION
Managing Water in the West

ALWAYS THINK SAFETY

U.S. DEPARTMENT OF THE INTERIOR
BUREAU OF RECLAMATION
NAVAJO-GALLUP WATER SUPPLY PROJECT
NEW MEXICO

SAN JUAN LATERAL

PUMPING PLANT NO. 7

PAUL GARDNER
DESIGNED
D. THORNBURG
DRAWN
Gilbert, Justin J.
CHECKED
Gardner, Paul
TECH. APPR.
Longwell, Barry D.
APPROVED
ADMIN APPROVAL - Project Construction Engineer

FARMINGTON, NM 2016-08-12

GENERAL GEOLOGIC LEGEND, EXPLANATION, AND NOTES

1695-529-60094

SHEET 1

DATE AND TIME PLOTTED
SEPTEMBER 1, 2016 16:13
PLOTTED BY
DTHORNBURG

CAD SYSTEM
AutoCAD Rel. 20.0s
CAD FILENAME
1695-529-60094-AD-1.DWG

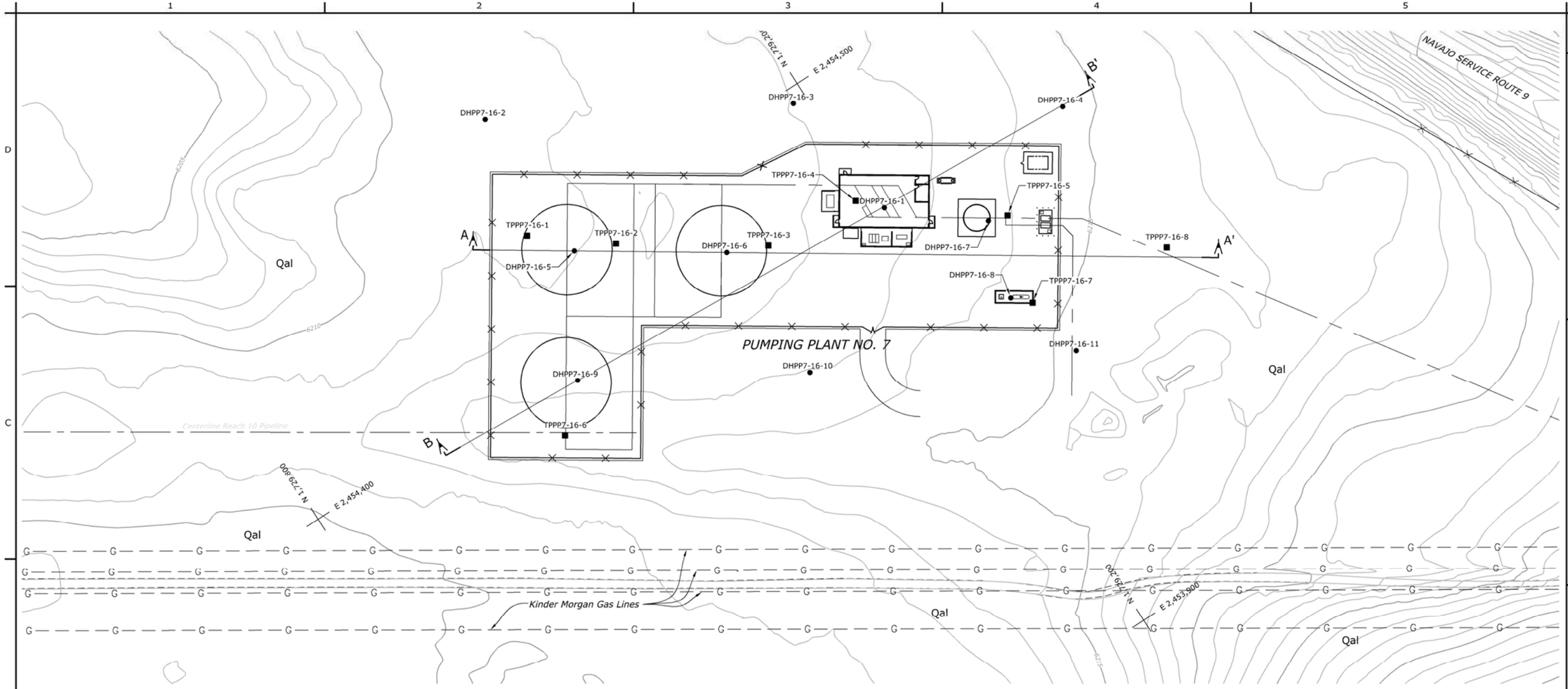

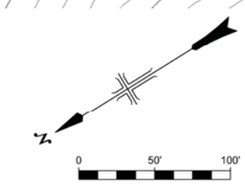

GENERAL NOTES

1. Coordinates based on New Mexico State Plane West Zone, feet. (NAD83).
2. The Ground to New Mexico State Plane West Zone Grid conversion factor is 0.999703693004.
3. Contour interval is 1 foot.

REFERENCE DRAWINGS

General Map.....1695-529-60091.
Location Map.....1695-529-60064.
Geologic Sections.....1695-529-60084.
General Geologic Legend, Explanation, and Notes.....1695-529-60094.

RECLAMATION
Managing Water in the West

ALWAYS THINK SAFETY

U.S. DEPARTMENT OF THE INTERIOR
BUREAU OF RECLAMATION
NAVAJO-GALLUP WATER SUPPLY PROJECT
NEW MEXICO

SAN JUAN LATERAL

PUMPING PLANT NO. 7

PAUL GARDNER
DESIGNED
D. THORNBURG
DRAWN
PAUL GARDNER
CHECKED
Gilbert, Justin J
TECH. APPR.
Longwell, Barry D
APPROVED
ADMIN APPROVAL - Project Construction Engineer

FARMINGTON, NM 2016-09-01

SURFACE GEOLOGY AND LOCATION OF EXPLORATION

1695-529-60059

SHEET 1

DATE AND TIME PLOTTED
SEPTEMBER 1, 2016 16:05
PLOTTED BY
DTHORNBURG

CAD SYSTEM
AutoCAD Rel. 20.0s
CAD FILENAME
1695-529-60059-AD-1.DWG

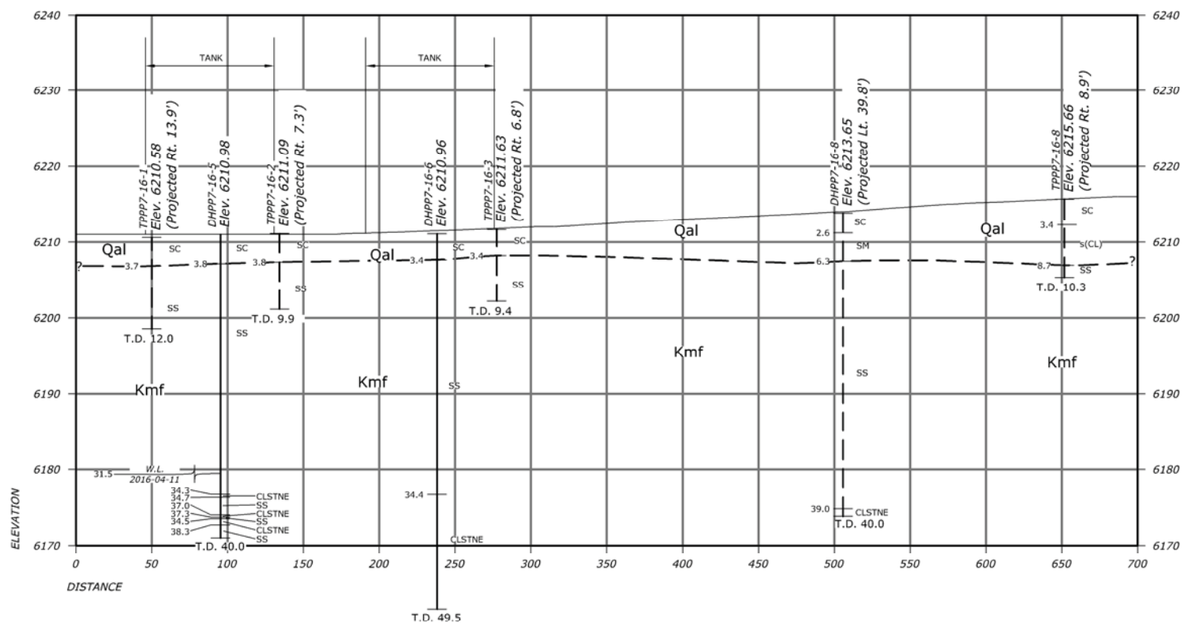

GEOLOGIC SECTION A-A'

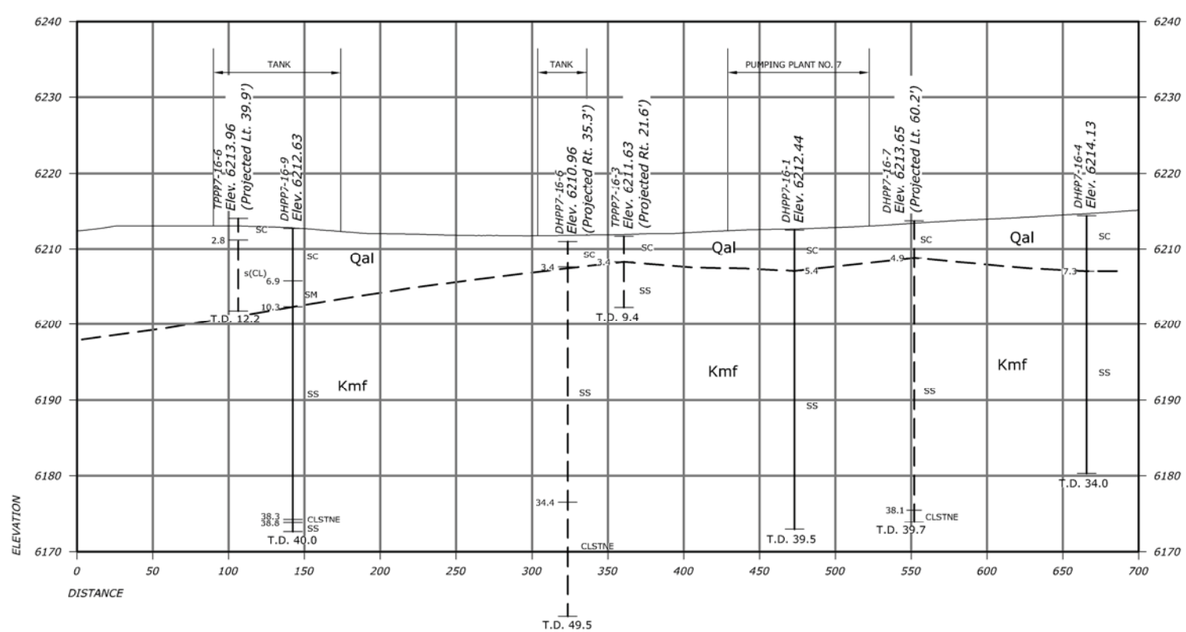

GEOLOGIC SECTION B-B'

REFERENCE DRAWINGS

General Map..... .....1695-529-60091.
Location Map.....1695-529-60064.
Surface geology and Location of Exploration.....1695-529-60059.
General Geologic Legend Explanation and Notes.....1695-529-60094.

RECLAMATION
Managing Water in the West

ALWAYS THINK SAFETY

U.S. DEPARTMENT OF THE INTERIOR
BUREAU OF RECLAMATION
NAVAJO-GALLUP WATER SUPPLY PROJECT
NEW MEXICO

SAN JUAN LATERAL

PUMPING PLANT NO. 7

PAUL GARDNER
DESIGNED
D. THORNBURG
DRAWN
PAUL GARDNER
CHECKED
Gilbert, Justin J
TECH. APPR.
Longwell, Barry D
APPROVED
ADMIN APPROVAL - Project Construction Engineer

FARMINGTON, NM 2016-09-01

GEOLOGIC SECTIONS A-A' AND B-B'

1695-529-60084

SHEET 1

DATE AND TIME PLOTTED: SEPTEMBER 1, 2016 1:C:08
PLOTTED BY DTHORNBURG

CAD SYSTEM AutoCAD Rel. 20.0s
CAD FILENAME 1695-529-60084-RD-1.DWG

GEOLOGIC LOG OF DRILL HOLE NO. DHSTR7-16- 1

FEATURE: Pumping Plant 4
LOCATION: Site Investigation
BEGUN: 3/25/16 FINISHED: 3/25/16
DEPTH AND ELEVATION OF WATER LEVEL: NE
DATE MEASURED: 3/25/2016

PROJECT: Navajo Gallup Water Supply Project
COORDINATES: N 1,884,908.3 E 2,464,300.9 N.M. State Plane
TOTAL DEPTH: 45.0
DEPTH TO BEDROCK: 26.2

STATE: New Mexico
GROUND ELEVATION: 5866.7 ft. NAD-83
ANGLE FROM HORIZONTAL: -90
HOLE LOGGED BY: C. Beyer
REVIEWED BY: J. Gilbert

NOTES

ALL MEASUREMENTS ARE FROM GROUND LEVEL AND ARE THE SAME AS THOSE USED BY DRILLER.

ALL MEASUREMENTS ARE REPORTED IN FEET EXCEPT WHERE NOTED.

DRILLED BY:
UPPER COLORADO DRILL CREW
DRILLER: KYLE KILLEBREW
HELPER: JOE PROCTOR
HELPER: RENATO MATHESON

PURPOSE:
PRECONSTRUCTION SOIL AND BEDROCK FOUNDATION INVESTIGATIONS.

DRILL EQUIPMENT:
CME MODEL 85 TRUCK MOUNTED ROTARY DRILL RIG.

DRILL METHOD:
0.0 TO 8.0 FT: 4 1/4" SSA WITH PILOT BIT.
8.0 TO 10.3 FT (REFUSAL): 4 1/4" HSA AND DRY CORE SYSTEM.
10.3 TO 13.0 FT: 4 1/4" SSA WITH PILOT BIT.
13.0 TO 18.0 FT: 4 1/4" HSA AND DRY CORE SYSTEM.
18.0 TO 19.0 FT: 4 1/4" HSA AND DRY CORE SYSTEM WITH CALIFORNIA SAMPLER. (ASSUMED CLAYSTONE)
19.0 TO 24.5 FT: 4 1/4" HSA AND DRY CORE SYSTEM WITH SPTS
24.5 TO 45.0 FT: HSA AND DRY CORE SYSTEM WITH CALIFORNIA SAMPLER.

CASING RECORD:
NONE USED

DRILLING MEDIUM:
0.0 TO 45.0 FT: NONE

DRILLING NOTES:
PILOT BIT USED TO PENETRATE PEDIMENT GRAVEL DEPOSIT. NO SPTS WERE CONDUCTED IN GRAVEL. VERY DIFFICULT AUGERING THROUGH PEDIMENT GRAVEL.

HOLE COMPLETION:
BACKFILLED WITH BENTONITE AND CUTTINGS.

SAMPLING:
18.0 TO 19.0 FT: CALIFORNIA SAMPLE (DISCARDED)
20.5 TO 22.0 FT: SPT
23.0 TO 24.5 FT: SPT
28.0 TO 29.0 FT: CALIFORNIA SAMPLE
30.5 TO 31.5 FT: CALIFORNIA SAMPLE
33.0 TO 34.0 FT: CALIFORNIA SAMPLE
35.5 TO 36.5 FT: CALIFORNIA SAMPLE
38.0 TO 39.0 FT: CALIFORNIA SAMPLE
40.5 TO 41.5 FT: CALIFORNIA SAMPLE
43.0 TO 44.0 FT: CALIFORNIA SAMPLE

DEPTH	GEOLOGIC SYMBOL	% CORE RECOVERY	% RQD	HARDNESS	WEATHERING	% FINES	% SAND	% GRAVEL	LIQUID LIMIT	PLASTICITY INDEX	MOISTURE CONTENT	LABORATORY CLASSIFICATION	BLOWS / 0.5 FT	VISUAL CLASSIFICATION
	Qpd	PILOT												
5														
		39												(SP-SM)gc
10														
		PILOT												
		74												
15														
		68												5848.8
													16/20	
		96												
20														SP-SM
		88				40.1	59.9	0.0	NA	NP	2.8	SM	17/25/22	
														5844.0
		90				33.6	66.4	0.0	NA	NP	2.8	SM	12/19/28	SM
25														
				7	8									5840.5
	Kmf	100		6	5								14/23	CLSTNE
														5836.7
30														
		100											31/37	
		100											30/REFUSAL	
35														
		100											46/REFUSAL	
		100		5-6	4									SHALE
		100											27/REFUSAL	
40														
		43											REFUSAL	
		100											REFUSAL	
45														5821.7

BOTTOM OF HOLE

CLASSIFICATION AND PHYSICAL CONDITION

0.0 TO 26.2 FT QUATERNARY PEDIMENT DEPOSIT (Qpd)

0.0 TO 17.9 FT POORLY GRADED SAND WITH SILT, GRAVEL AND COBBLES (SP-SM)gc: ABOUT 50% PREDOMINATELY FINE SAND, TRACE MEDIUM TO COARSE SAND; ABOUT 30% FINE TO COARSE SUBANGULAR, HARD, SANDSTONE, CHERT AND PETRIFIED WOOD GRAVEL; ABOUT 10% NONPLASTIC FINES WITH RAPID DILATANCY, AND NO DRY STRENGTH; GRAY IN COLOR; DRY; STRONG REACTION WITH HCl.

TOTAL SAMPLE (BY VOLUME): ABOUT 10% 3 TO 5 INCH HARD, SUBANGULAR TO SUBROUNDED SANDSTONE, BASALT AND MINETTE COBBLES TRACE 5 TO 12 INCH SUBANGULAR TO SUBROUNDED SANDSTONE, BASALT AND MINETTE COBBLES; REMAINDER MINUS 3-INCH; MAXIMUM SIZE, 200mm.

17.9 TO 22.7 FT POORLY GRADED SAND WITH SILT (SP-SM): ABOUT 90% PREDOMINATELY FINE SAND, TRACE MEDIUM TO COARSE SAND; ABOUT 10% NONPLASTIC FINES WITH RAPID DILATANCY AND NO DRY STRENGTH; TRACE SUBANGULAR, HARD, SANDSTONE GRAVEL; MAXIMUM SIZE, 20mm; DRY, BROWN IN COLOR; STONG REACTION WITH HCl.

22.7 TO 26.2 FT SILTY SAND (SM): ABOUT 85% PREDOMINATELY FINE SAND, TRACE MEDIUM TO COARSE SAND; ABOUT 15% NONPLASTIC FINES WITH RAPID DILATANCY AND NO DRY STRENGTH; TRACE SUBANGULAR, HARD, SANDSTONE GRAVEL; MAXIMUM SIZE, 25mm DRY, GREY IN COLOR; NO REACTION WITH HCl.

26.2 TO 45.0 FT CRETACEOUS MENEFEE FORMATION (Kmf)

26.2 TO 30.0 FT CLAYSTONE: VERY SOFT (H7), AND VERY INTENSELY WEATHERED (W8), FROM 26.2 TO 26.7 FT. SOFT (H6) AND MODERATELY WEATHERED (W5) FROM 26.7 TO 30.0 FT. GREY IN COLOR, MOTTLED, LAMINATED, CARBONACEOUS FRAGMENTS, COAL LAMINATIONS, GYPSUM NODULES, AND IRON OXIDE STAINING.

30.0 TO 45.0 FT SHALE: SLIGHTLY FISSILE, SLIGHTLY TO MODERATELY WEATHERED (W4) MODERATELY SOFT TO SOFT (H5-H6), CARBONACEOUS, LAMINATED TO THINLY BEDDED, COAL LAMINATIONS, BROWN TO BLACK IN COLOR, IRON OXIDE STAINING. NO REACTION WITH HCl.

END OF HOLE, TOTAL DEPTH= 45.0

STRATIGRAPHY:
0.0 - 26.2 FT QUATERNARY PEDIMENT DEPOSIT (Qpd)
26.2 - 45.0 FT CRETACEOUS MENEFEE FORMATION (Kmf)

COMMENTS:

THE DATA FOR THE CENTER COLUMN AND "CLASSIFICATION AND PHYSICAL CONDITIONS" COLUMN ARE BASED ON BUREAU OF RECLAMATION GEOLOGY FIELD MANUAL AND DRAWINGS TITLED FOR DESIGNS AND SPECIFICATIONS AS FOLLOWS- DRAWING NO. 40-D-6493. STANDARD DESCRIPTIONS AND DESCRIPTIVE CRITERIA FOR ROCK. DRAWING NO. 40-D-6499. STANDARD DESCRIPTORS AND DESCRIPTIVE CRITERIA FOR DISCONTINUITIES. ALL ANGLES MEASURED FROM CORE AXIS AT ZERO DEGREES, UNLESS OTHERWISE NOTED.

HSA= HOLLOW STEM AUGER SSA= SOLID STEM AUGER NE= NOT ENCOUNTERED NA= NOT AVAILABLE NP= NON PLASTIC SS= SANDSTONE CLSTNE= CLAYSTONE
SPT= STANDARD PENETRATION TEST FeOx= IRON OXIDE MnOx= MANGANESE OXIDE HCl= HYDROCHLORIC ACID

GEOLOGIC LOG OF DRILL HOLE NO. DHSTR7-16- 2

FEATURE: Pumping Plant 4
LOCATION: Site Investigation
BEGUN: 3/29/16 FINISHED: 3/29/16
DEPTH AND ELEVATION OF WATER LEVEL: NE
DATE MEASURED: 3/29/2016

PROJECT: Navajo Gallup Water Supply Project
COORDINATES: N 1,884,661.2 E 2,464,323.5 N.M. State Plane
TOTAL DEPTH: 45.0
DEPTH TO BEDROCK: 13.8

STATE: New Mexico
GROUND ELEVATION: 5865.5 ft. NAD-83
ANGLE FROM HORIZONTAL: -90
HOLE LOGGED BY: C. Beyer
REVIEWED BY: J. Gilbert

NOTES

ALL MEASUREMENTS ARE FROM GROUND LEVEL AND ARE THE SAME AS THOSE USED BY DRILLER.

ALL MEASUREMENTS ARE REPORTED IN FEET EXCEPT WHERE NOTED.

DRILLED BY:
UPPER COLORADO DRILL CREW
DRILLER: KYLE KILLEBREW
HELPER: JOE PROCTOR
HELPER: RENATO MATHESON

PURPOSE:
PRECONSTRUCTION SOIL AND BEDROCK FOUNDATION INVESTIGATIONS.

DRILL EQUIPMENT:
CME MODEL 85 TRUCK MOUNTED ROTARY DRILL RIG.

DRILL METHOD:
0.0 TO 13.0 FT: 4 1/4" SSA WITH PILOT BIT
13.0 TO 14.5 FT: 4 1/4" HSA AND DRY CORE SYSTEM WITH SPTS.
14.5 TO 45.0 FT: 4 1/4" HSA AND DRY CORE SYSTEM WITH CALIFORNIA SAMPLER.

CASING RECORD:
NONE USED

DRILLING MEDIUM:
0.0 TO 45.0 FT: NONE

DRILLING NOTES:
PILOT BIT USED TO PENETRATE PEDIMENT GRAVEL DEPOSIT. NO SPTS WERE CONDUCTED IN GRAVEL. VERY DIFFICULT AUGERING THROUGH PEDIMENT GRAVEL. PILOT BIT HIT REFUSAL AT 3 FT ON FIRST ATTEMPT, MOVED RIG EAST ABOUT 1 FOOT. PILOT BIT REACHED REFUSAL AT 3 FT AGAIN. MOVED RIG EAST ABOUT 3 FEET AND RESUMED DRILLING.

HOLE COMPLETION:
BACKFILLED WITH BENTONITE.

SAMPLING:
13.0 TO 14.5 FT: SPT
18.0 TO 19.0 FT: CALIFORNIA SAMPLE
23.0 TO 24.0 FT: CALIFORNIA SAMPLE
28.0 TO 29.0 FT: CALIFORNIA SAMPLE
33.0 TO 34.0 FT: CALIFORNIA SAMPLE
38.0 TO 39.0 FT: CALIFORNIA SAMPLE
43.0 TO 44.0 FT: CALIFORNIA SAMPLE

DEPTH	GEOLOGIC SYMBOL	% CORE RECOVERY	% RQD	HARDNESS	WEATHERING	% FINES	% SAND	% GRAVEL	LIQUID LIMIT	PLASTICITY INDEX	MOISTURE CONTENT	LABORATORY CLASSIFICATION	BLOWS / 0.5 FT	VISUAL CLASSIFICATION
5	Qpd	PILOT												(SP-SM)gc
10														5854.5
														(SP-SM)
				7	8	79.8	17.8	2.6	38.9	22.4	6.8	(CL)s	11/16/19	5851.7
15		82												
													18/30	
20		100												
													20/50	
25		100		6	5									CLSTNE
													40/REFUSAL	
30	Kmf	100												
													REFUSAL	
35		100												5830.3
													37/REFUSAL	
40		100		5-6	4									SHALE
		100											REFUSAL	
45														5820.5

BOTTOM OF HOLE

CLASSIFICATION AND PHYSICAL CONDITION

0.0 TO 13.8 FT QUATERNARY PEDIMENT DEPOSIT (Qpd)

0.0 TO 11.0 FT POORLY GRADED SAND WITH SILT GRAVEL AND COBBLES (SP-SM)gc: ABOUT 50% PREDOMINATELY FINE SAND, TRACE MEDIUM TO COARSE SAND; ABOUT 40% FINE TO COARSE SUBANGULAR, HARD, SANDSTONE, CHERT AND PETRIFIED WOOD GRAVEL; ABOUT 10% NONPLASTIC FINES WITH RAPID DILATANCY AND NO DRY STRENGTH; GRAY IN COLOR; DRY; STRONG REACTION WITH HCl.

TOTAL SAMPLE (BY VOLUME): ABOUT 10% 3 TO 5 INCH HARD, SUBANGULAR TO SUBROUNDED SANDSTONE, BASALT AND MINETTE COBBLES TRACE 5 TO 12 INCH SUBANGULAR TO SUBROUNDED SANDSTONE, BASALT AND MINETTE COBBLES; REMAINDER MINUS 3-INCH; MAXIMUM SIZE, 200mm.

11.0 TO 13.8 FT POORLY GRADED SAND WITH SILT AND GRAVEL (SP-SM)g: ABOUT 75% PREDOMINATELY FINE SAND, TRACE MEDIUM TO COARSE SAND; ABOUT 15% SUBANGULAR, HARD SANDSTONE GRAVEL; ABOUT 10% NONPLASTIC FINES WITH RAPID DILATANCY AND NO DRY STRENGTH; MAXIMUM SIZE, 20mm; DRY, BROWN IN COLOR; STRONG REACTION WITH HCl.

13.8 TO 45.0 FT CRETACEOUS MENEFEE FORMATION (Kmf)

13.8 TO 35.2 FT CLAYSTONE: VERY SOFT (H7), AND VERY INTENSELY WEATHERED (W8), FROM 13.8 TO 14.5 FT. SOFT (H6) AND MODERATELY WEATHERED (W5) FROM 14.5 TO 35.2 FT. GREY IN COLOR, MOTTLED, LAMINATED, CARBONACEOUS FRAGMENTS, COAL LAMINATIONS, IRON OXIDE STAINING. THIN CONCRETIONARY INTERBEDS FROM 15.5 TO 16.0 FT AND 18.0 TO 18.1 FT.

35.2 TO 45.0 FT SHALE: SLIGHTLY FISSILE SLIGHTLY TO MODERATELY WEATHERED (W4) MODERATELY SOFT TO SOFT (H5-H6), CARBONACEOUS, LAMINATED TO THINLY BEDDED, COAL LAMINATIONS, BROWN TO BLACK IN COLOR, IRON OXIDE STAINING. NO REACTION WITH HCl.

END OF HOLE, TOTAL DEPTH= 45.0

STRATIGRAPHY:
0.0 - 13.8 FT QUATERNARY PEDIMENT DEPOSIT (Qpd)
13.8 - 45.0 FT CRETACEOUS MENEFEE FORMATION (Kmf)

COMMENTS:

THE DATA FOR THE CENTER COLUMN AND "CLASSIFICATION AND PHYSICAL CONDITIONS" COLUMN ARE BASED ON BUREAU OF RECLAMATION GEOLOGY FIELD MANUAL AND DRAWINGS TITLED FOR DESIGNS AND SPECIFICATIONS AS FOLLOWS- DRAWING NO. 40-D-6493. STANDARD DESCRIPTIONS AND DESCRIPTIVE CRITERIA FOR ROCK. DRAWING NO. 40-D-6499. STANDARD DESCRIPTORS AND DESCRIPTIVE CRITERIA FOR DISCONTINUITIES. ALL ANGLES MEASURED FROM CORE AXIS AT ZERO DEGREES, UNLESS OTHERWISE NOTED.

HSA= HOLLOW STEM AUGER SSA= SOLID STEM AUGER NE= NOT ENCOUNTERED NA= NOT AVAILABLE NP= NON PLASTIC SS= SANDSTONE CLSTNE= CLAYSTONE
SPT= STANDARD PENETRATION TEST FeOx= IRON OXIDE MnOx= MANGANESE OXIDE HCl= HYDROCHLORIC ACID

GEOLOGIC LOG OF DRILL HOLE NO. DHSTR7-16- 3

FEATURE: Pumping Plant 4
LOCATION: Site Investigation
BEGUN: 3/26/16 FINISHED: 3/26/16
DEPTH AND ELEVATION OF WATER LEVEL: NE
DATE MEASURED: 3/26/2016

PROJECT: Navajo Gallup Water Supply Project
COORDINATES: N 1,884,889.2 E 2,464,201.7 N.M. State Plane
TOTAL DEPTH: 45.0
DEPTH TO BEDROCK: 23.5

STATE: New Mexico
GROUND ELEVATION: 5867.9 ft. NAD-83
ANGLE FROM HORIZONTAL: -90
HOLE LOGGED BY: C. Beyer
REVIEWED BY: J. Gilbert

NOTES

ALL MEASUREMENTS ARE FROM GROUND LEVEL AND ARE THE SAME AS THOSE USED BY DRILLER.

ALL MEASUREMENTS ARE REPORTED IN FEET EXCEPT WHERE NOTED.

DRILLED BY:
UPPER COLORADO DRILL CREW
DRILLER: KYLE KILLEBREW
HELPER: JOE PROCTOR
HELPER: RENATO MATHESON

PURPOSE:
PRECONSTRUCTION SOIL AND BEDROCK FOUNDATION INVESTIGATIONS.

DRILL EQUIPMENT:
CME MODEL 85 TRUCK MOUNTED ROTARY DRILL RIG.

DRILL METHOD:
0.0 TO 13.0 FT: 4 1/4" SSA WITH PILOT BIT
13.0 TO 22.0 FT: 4 1/4" HSA AND DRY CORE SYSTEM WITH SPTS
22.0 TO 45.0 FT: 4 1/4" HSA AND DRY CORE SYSTEM WITH CALIFORNIA SAMPLER.

CASING RECORD:
NONE USED

DRILLING MEDIUM:
0.0 TO 45.0 NONE

DRILLING NOTES:
PILOT BIT USED TO PENETRATE PEDIMENT GRAVEL DEPOSIT. NO SPTS WERE CONDUCTED IN GRAVEL. VERY DIFFICULT AUGERING THROUGH PEDIMENT GRAVEL. PILOT BIT HIT REFUSAL AT 4 FT ON FIRST ATTEMPT, MOVED RIG EAST ABOUT 3 FEET. PILOT BIT REACHED REFUSAL AT 9 FT AGAIN. MOVED RIG EAST ABOUT 4 FEET AND RESUMED DRILLING.

HOLE COMPLETION:
BACKFILLED WITH BENTONITE.

SAMPLING:
18.0 TO 19.5 FT: SPT
20.5 TO 22.0 FT: SPT
25.5 TO 26.5 FT: CALIFORNIA SAMPLE
28.0 TO 29.0 FT: CALIFORNIA SAMPLE
30.5 TO 31.5 FT: CALIFORNIA SAMPLE
33.0 TO 34.0 FT: CALIFORNIA SAMPLE
35.5 TO 36.5 FT: CALIFORNIA SAMPLE
38.0 TO 39.0 FT: CALIFORNIA SAMPLE
40.5 TO 41.5 FT: CALIFORNIA SAMPLE
43.0 TO 44.0 FT: CALIFORNIA SAMPLE

DEPTH	GEOLOGIC SYMBOL	% CORE RECOVERY	% RQD	HARDNESS	WEATHERING	LABORATORY DATA: % FINES	% SAND	% GRAVEL	LIQUID LIMIT	PLASTICITY INDEX	MOISTURE CONTENT	LABORATORY CLASSIFICATION	BLOWS / 0.5 FT	VISUAL CLASSIFICATION
5	Qpd	NR												
10														(SP-SM)gc
15		32												5850.2
		96				38.6	54.6	6.8	NA	NP	3.2	SM	11/21/26	
20														SP-SM
		76				19.3	69.8	10.9	NA	NP	2.2	SM	14/27/30	
				7	8									5844.4
25		100											18/35	
		100		6	5								16/28	CLSTNE
30		100											29/47	
														5834.9
	Kmf	100		5-6									33/REFUSAL	SHALE
35				6										5832.9 GOAL 5832.6
		100											28/REFUSAL	
		100			4								REFUSAL	
40				5										SHALE
		100											REFUSAL	
		100											REFUSAL	
45														5822.9

BOTTOM OF HOLE

CLASSIFICATION AND PHYSICAL CONDITION

0.0 TO 23.5 FT QUATERNARY PEDIMENT DEPOSIT (Qpd)

0.0 TO 17.7 FT POORLY GRADED SAND WITH SILT GRAVEL AND COBBLES (SP-SM)gc: ABOUT 50% PREDOMINATELY FINE SAND, TRACE MEDIUM TO COARSE SAND; ABOUT 40% FINE TO COARSE SUBANGULAR, HARD, SANDSTONE, CHERT AND PETRIFIED WOOD GRAVEL; ABOUT 10% NONPLASTIC FINES WITH RAPID DILATANCY AND NO DRY STRENGTH; GRAY IN COLOR AND DRY; STRONG REACTION WITH HCl.

TOTAL SAMPLE (BY VOLUME): ABOUT 10% 3 TO 5 INCH HARD, SUBANGULAR TO SUBROUNDED SANDSTONE, BASALT AND MINETTE COBBLES; TRACE 5 TO 12 INCH SUBANGULAR TO SUBROUNDED SANDSTONE, BASALT AND MINETTE COBBLES; REMAINDER MINUS 3-INCH; MAXIMUM SIZE, 200mm.

17.7 TO 23.5 FT POORLY GRADED SAND WITH SILT (SP-SM): ABOUT 90% PREDOMINATELY FINE SAND, TRACE MEDIUM TO COARSE SAND; ABOUT 10% NONPLASTIC FINES WITH RAPID DILATANCY AND NO DRY STRENGTH; TRACE SUBANGULAR, HARD, SANDSTONE GRAVEL; MAXIMUM SIZE, 75mm; DRY, BROWN IN COLOR; STONG REACTION WITH HCl.

23.5 TO 45.0 FT CRETACEOUS MENEFEE FORMATION (Kmf)

23.5 TO 33.0 FT CLAYSTONE: VERY SOFT (H7) AND VERY INTENSELY WEATHERED (W8) FROM 23.5 TO 24.0 FT. SOFT (H6) AND MODERATELY WEATHERED (W5) FROM 24.0 TO 33.0 FT. GREY IN COLOR, MOTTLED, LAMINATED, CARBONACEOUS FRAGMENTS, COAL LAMINATIONS, GYPSUM NODULES, AND IRON OXIDE STAINING.

33.0 TO 35.0 FT SHALE: SLIGHTLY FISSILE SLIGHTLY TO MODERATELY WEATHERED (W4) MODERATELY SOFT TO SOFT (H5-H6), CARBONACEOUS, LAMINATED TO THINLY BEDDED, COAL LAMINATIONS, BROWN TO BLACK IN COLOR, IRON OXIDE STAINING. NO REACTION WITH HCl.

35.0 TO 35.9 FT COAL: LIGNITIC, BROWNISH BLACK IN COLOR, SOFT (H6), MODERATELY TO SLIGHTLY WEATHERED (W4), BRITTLE, DULL LUSTER, THINLY BEDDED TO LAMINATED.

35.9 TO 45.0 FT SHALE: SLIGHTLY FISSILE, SLIGHTLY TO MODERATELY WEATHERED (W4) MODERATELY SOFT (H5), CARBONACEOUS, LAMINATED TO THINLY BEDDED, COAL LAMINATIONS, BROWN TO BLACK IN COLOR, IRON OXIDE STAINING. NO REACTION WITH HCl.

END OF HOLE, TOTAL DEPTH= 45.0

STRATIGRAPHY:
0.0 - 23.5 FT QUATERNARY PEDIMENT DEPOSIT (Qpd)
23.5 - 45.0 FT CRETACEOUS MENEFEE FORMATION (Kmf)

COMMENTS:

THE DATA FOR THE CENTER COLUMN AND "CLASSIFICATION AND PHYSICAL CONDITIONS" COLUMN ARE BASED ON BUREAU OF RECLAMATION GEOLOGY FIELD MANUAL AND DRAWINGS TITLED FOR DESIGNS AND SPECIFICATIONS AS FOLLOWS- DRAWING NO. 40-D-6493. STANDARD DESCRIPTIONS AND DESCRIPTIVE CRITERIA FOR ROCK. DRAWING NO. 40-D-6499. STANDARD DESCRIPTORS AND DESCRIPTIVE CRITERIA FOR DISCONTINUITIES. ALL ANGLES MEASURED FROM CORE AXIS AT ZERO DEGREES, UNLESS OTHERWISE NOTED.

HSA= HOLLOW STEM AUGER SSA= SOLID STEM AUGER NE= NOT ENCOUNTERED NA= NOT AVAILABLE NP= NON PLASTIC SS= SANDSTONE CLSTNE= CLAYSTONE
SPT= STANDARD PENETRATION TEST FeOx= IRON OXIDE MnOx= MANGANESE OXIDE HCl= HYDROCHLORIC ACID

GEOLOGIC LOG OF DRILL HOLE NO. DHSTR7-16- 4

FEATURE: Pumping Plant 4
LOCATION: Site Investigation
BEGUN: 3/30/16 FINISHED: 3/30/16
DEPTH AND ELEVATION OF WATER LEVEL: NE
DATE MEASURED: 3/30/2016

PROJECT: Navajo Gallup Water Supply Project
COORDINATES: N 1,884,735.8 E 2,464,198.8 N.M. State Plane
TOTAL DEPTH: 45.0
DEPTH TO BEDROCK: 22.4

STATE: New Mexico
GROUND ELEVATION: 5868.3 ft. NAD-83
ANGLE FROM HORIZONTAL: -90
HOLE LOGGED BY: C. Beyer
REVIEWED BY: J. Gilbert

NOTES

ALL MEASUREMENTS ARE FROM GROUND LEVEL AND ARE THE SAME AS THOSE USED BY DRILLER.

ALL MEASUREMENTS ARE REPORTED IN FEET EXCEPT WHERE NOTED.

DRILLED BY:
UPPER COLORADO DRILL CREW
DRILLER: KYLE KILLEBREW
HELPER: JOE PROCTOR
HELPER: RENATO MATHESON

PURPOSE:
PRECONSTRUCTION SOIL AND BEDROCK FOUNDATION INVESTIGATIONS.

DRILL EQUIPMENT:
CME MODEL 85 TRUCK MOUNTED ROTARY DRILL RIG.

DRILL METHOD:
0.0 TO 13.0 FT: 4 1/4" SSA WITH PILOT BIT
13.0 TO 23.0 FT: 4 1/4" HSA AND DRY CORE SYSTEM WITH SPTS.
23.0 TO 45.0 FT: 4 1/4" HSA AND DRY CORE SYSTEM WITH CALIFORNIA SAMPLER.

CASING RECORD:
NONE USED

DRILLING MEDIUM:
0.0 TO 45.0 FT: NONE

DRILLING NOTES:
PILOT BIT USED TO PENETRATE PEDIMENT GRAVEL DEPOSIT. NO SPTS WERE CONDUCTED IN GRAVEL. VERY DIFFICULT AUGERING THROUGH PEDIMENT GRAVEL. REACHED REFUSAL ON FIRST ATTEMPT AT 2.0 FT. MOVED SOUTH ABOUT 2.0 FT. REACHED REFUSAL AT 3.0 FT ON SANDSTONE BOULDER. MOVED SOUTH ABOUT 3.0 FT AND RESUMED DRILLING.

HOLE COMPLETION:
BACKFILLED WITH BENTONITE.

SAMPLING:
13.0 TO 14.5 FT: SPT
15.5 TO 17.0 FT: SPT
18.0 TO 19.5 FT: SPT
20.5 TO 22.0 FT: SPT
23.0 TO 24.0 FT: CALIFORNIA SAMPLE
28.0 TO 29.0 FT: CALIFORNIA SAMPLE
33.0 TO 34.0 FT: CALIFORNIA SAMPLE
35.5 TO 36.5 FT: CALIFORNIA SAMPLE
38.0 TO 39.0 FT: CALIFORNIA SAMPLE
42.0 TO 43.0 FT: CALIFORNIA SAMPLE

DEPTH	GEOLOGIC SYMBOL	% CORE RECOVERY	% RQD	HARDNESS	WEATHERING	% FINES	% SAND	% GRAVEL	LIQUID LIMIT	PLASTICITY INDEX	MOISTURE CONTENT	LABORATORY CLASSIFICATION	BLOWS / 0.5 FT	VISUAL CLASSIFICATION
5	Qpd	PILOT												(SP-SM)gcb
10														
		88				15.7	55.7	28.6	NA	NP	1.5	(SM)g	20/41/34	5853.8
15		92				35.3	63.0	1.7	NA	NP	2.2	SM	8/16/21	SM
		92				24.8	61.9	13.3	NA	NP	2.5	SM	30/40/49	
20		96				30.5	61.5	8.0	NA	NP	2.7	SM	11/17/20	5845.9
	Kmf			7	8									
25		100											14/19	
				6	5								18/23	CLSTNE
30		100												
													REFUSAL	5834.3
35		100												
				5	4								REFUSAL	SHALE
40		100												
													REFUSAL	
		100												
45														5823.3

BOTTOM OF HOLE

CLASSIFICATION AND PHYSICAL CONDITION

0.0 TO 22.4 FT QUATERNARY PEDIMENT DEPOSIT (Qpd)

0.0 TO 14.5 FT POORLY GRADED SAND WITH SILT, GRAVEL, COBBLES AND BOULDERS (SP-SM)gcb: ABOUT 50% PREDOMINATELY FINE SAND, TRACE MEDIUM TO COARSE SAND; ABOUT 40% FINE TO COARSE SUBANGULAR, HARD, SANDSTONE, CHERT AND PETRIFIED WOOD GRAVEL; ABOUT 10% NONPLASTIC FINES WITH RAPID DILATANCY AND NO DRY STRENGTH; DRY, GRAY IN COLOR; STRONG REACTION WITH HCl.

TOTAL SAMPLE (BY VOLUME): ABOUT 5% 3 TO 5 INCH HARD, SUBANGULAR TO SUBROUNDED SANDSTONE, BASALT AND MINETTE COBBLES; ABOUT 5% 5 TO 12 INCH HARD, SUBANGULAR TO SUBROUNDED SANDSTONE, BASALT AND MINETTE COBBLES;TRACE HARD, SUBANGULAR SANDSTONE BOULDERS; REMAINDER MINUS 3-INCH; MAXIMUM SIZE, 450mm.

14.5 TO 22.4 FT SILTY SAND (SM): ABOUT 80% PREDOMINATELY FINE SAND, TRACE MEDIUM TO COARSE SAND; ABOUT 20% NONPLASTIC FINES WITH RAPID DILATANCY AND NO DRY STRENGTH; TRACE SUBANGULAR, HARD, SANDSTONE GRAVEL; MAXIMUM SIZE, 75mm; DRY, BROWN IN COLOR; STONG REACTION WITH HCl.

22.4 TO 45.0 FT CRETACEOUS MENEFEE FORMATION (Kmf)

22.4 TO 34.0 FT CLAYSTONE: VERY SOFT (H7) AND VERY INTENSELY WEATHERED (W8) FROM 22.4 TO 23 FT. SOFT (H6) AND MODERATELY WEATHERED (W5) FROM 23.0 TO 34.0 FT. GREY IN COLOR, MOTTLED, LAMINATED, CARBONACEOUS FRAGMENTS, COAL LAMINATIONS, GYPSUM NODULES, AND IRON OXIDE STAINING. BECOMES MORE CARBONACEOUS WITH INCREASED COAL LAMINATIONS FROM 29.0 TO 34.0 FT.

34.0 TO 45.0 FT SHALE: SLIGHTLY FISSILE, SLIGHTLY TO MODERATELY WEATHERED (W4), MODERATELY SOFT (H5), CARBONACEOUS, LAMINATED TO THINLY BEDDED, COAL LAMINATIONS, BROWN TO BLACK IN COLOR, GYPSUM VEINS, AND IRON OXIDE STAINING. NO REACTION WITH HCl.

END OF HOLE, TOTAL DEPTH= 45.0

STRATIGRAPHY:
0.0 - 22.4 FT QUATERNARY PEDIMENT DEPOSIT (Qpd)
22.4 - 45.0 FT CRETACEOUS MENEFEE FORMATION (Kmf)

COMMENTS:

THE DATA FOR THE CENTER COLUMN AND "CLASSIFICATION AND PHYSICAL CONDITIONS" COLUMN ARE BASED ON BUREAU OF RECLAMATION GEOLOGY FIELD MANUAL AND DRAWINGS TITLED FOR DESIGNS AND SPECIFICATIONS AS FOLLOWS- DRAWING NO. 40-D-6493. STANDARD DESCRIPTIONS AND DESCRIPTIVE CRITERIA FOR ROCK. DRAWING NO. 40-D-6499. STANDARD DESCRIPTORS AND DESCRIPTIVE CRITERIA FOR DISCONTINUITIES. ALL ANGLES MEASURED FROM CORE AXIS AT ZERO DEGREES, UNLESS OTHERWISE NOTED.

HSA= HOLLOW STEM AUGER SSA= SOLID STEM AUGER NE= NOT ENCOUNTERED NA= NOT AVAILABLE NP= NON PLASTIC SS= SANDSTONE CLSTNE= CLAYSTONE
SPT= STANDARD PENETRATION TEST FeOx= IRON OXIDE MnOx= MANGANESE OXIDE HCl= HYDROCHLORIC ACID

GEOLOGIC LOG OF DRILL HOLE NO. DHSTR7-16- 5

FEATURE: Pumping Plant 4
LOCATION: Tank Site
BEGUN: 3/27/16 FINISHED: 3/27/16
DEPTH AND ELEVATION OF WATER LEVEL: NE
DATE MEASURED: 3/27/2016

PROJECT: Navajo Gallup Water Supply Project
COORDINATES: N 1,884,971.0 E 2,464,120.1 N.M. State Plane
TOTAL DEPTH: 45.0
DEPTH TO BEDROCK: 18.0

STATE: New Mexico
GROUND ELEVATION: 5867.4 ft. NAD-83
ANGLE FROM HORIZONTAL: -90
HOLE LOGGED BY: P. Gardner, C. Beyer
REVIEWED BY: J. Gilbert

NOTES

ALL MEASUREMENTS ARE FROM GROUND LEVEL AND ARE THE SAME AS THOSE USED BY DRILLER.

ALL MEASUREMENTS ARE REPORTED IN FEET EXCEPT WHERE NOTED.

DRILLED BY:
UPPER COLORADO DRILL CREW
DRILLER: KYLE KILLEBREW
HELPER: JOE PROCTOR
HELPER: RENATO MATHESON

PURPOSE:
PRECONSTRUCTION SOIL AND BEDROCK FOUNDATION INVESTIGATIONS.

DRILL EQUIPMENT:
CME MODEL 85 TRUCK MOUNTED ROTARY DRILL RIG.

DRILL METHOD:
0.0 TO 13.0 FT: 4 1/4" SSA WITH PILOT BIT
13.0 TO 45.0 FT: 4 1/4" HSA AND DRY CORE SYSTEM WITH CALIFORNIA SAMPLER.

CASING RECORD:
NONE USED

DRILLING MEDIUM:
0.0 TO 45.0 FT: NONE

DRILLING NOTES:
PILOT BIT USED TO PENETRATE PEDIMENT GRAVEL DEPOSIT. NO SPTS WERE CONDUCTED IN GRAVEL. VERY DIFFICULT AUGERING THROUGH PEDIMENT GRAVEL. REACHED REFUSAL AT 4.0 FT ON FIRST ATTEMPT. MOVED 3.0 FT SOUTH AND RESUMED DRILLING.

HOLE COMPLETION:
BACKFILLED WITH BENTONITE.

SAMPLING:
20.5 TO 21.5 FT: CALIFORNIA SAMPLE
23.0 TO 24.0 FT: CALIFORNIA SAMPLE
25.5 TO 26.5 FT: CALIFORNIA SAMPLE
28.0 TO 29.0 FT: CALIFORNIA SAMPLE
30.5 TO 31.5 FT: CALIFORNIA SAMPLE
33.0 TO 34.0 FT: CALIFORNIA SAMPLE
35.5 TO 36.5 FT: CALIFORNIA SAMPLE
38.0 TO 39.0 FT: CALIFORNIA SAMPLE
40.5 TO 41.5 FT: CALIFORNIA SAMPLE
43.0 TO 44.0 FT: CALIFORNIA SAMPLE

DEPTH	GEOLOGIC SYMBOL	% CORE RECOVERY	% RQD	HARDNESS	WEATHERING	% FINES	% SAND	% GRAVEL	LIQUID LIMIT	PLASTICITY INDEX	MOISTURE CONTENT	LABORATORY CLASSIFICATION	BLOWS / 0.5 FT	VISUAL CLASSIFICATION
	Qpd	PILOT												SM
														5864.9
5														
														(SP)gc
10														
15		52												
														5849.4
	Kmf			7	8									
		100												
20														
		100											9/13	
		100											11/16	
25				6	5									CLSTNE
		100											20/40	
		96											18/28	
30														
		100										40/REFUSAL		
														5834.9
												34/REFUSAL		
35														
												30/REFUSAL		
				5	4							49/REFUSAL		SHALE
		100												
40														
		100											REFUSAL	
		96											REFUSAL	
45														5822.4

BOTTOM OF HOLE

CLASSIFICATION AND PHYSICAL CONDITION

0.0 TO 18.0 FT QUATERNARY PEDIMENT DEPOSIT (Qpd)

0.0 TO 2.5 FT SILTY SAND (SM): ABOUT 55% FINE SAND; ABOUT 45% FINES WITH NO PLASTICITY, NO DRY STRENGTH AND SLOW DILATANCY; TRACE GRAVEL, MAXIMUM SIZE, 30mm; BROWN IN COLOR, DRY, STRONG REACTION WITH HCl.

2.5 TO 18.0 FT POORLY GRADED SAND WITH GRAVEL AND COBBLES (SP)gc: ABOUT 55% PREDOMINATELY FINE SAND, TRACE MEDIUM TO COARSE SAND; ABOUT 40% FINE TO COARSE SUBANGULAR, HARD, SANDSTONE, CHERT AND PETRIFIED WOOD GRAVEL; ABOUT 5% NONPLASTIC FINES WITH RAPID DILATANCY AND NO DRY STRENGTH; DRY, LIGHT BROWN IN COLOR, STRONG REACTION WITH HCl.

TOTAL SAMPLE (BY VOLUME): ABOUT 10% 3 TO 5 INCH HARD, SUBANGULAR TO SUBROUNDED SANDSTONE, BASALT AND MINETTE COBBLES; TRACE 5 TO 12 INCH SUBANGULAR TO SUBROUNDED SANDSTONE, BASALT AND MINETTE COBBLES; REMAINDER MINUS 3-INCH; MAXIMUM SIZE, 200mm.

18.0 TO 45.0 FT CRETACEOUS MENEFEE FORMATION (Kmf)

18.0 TO 32.5 FT CLAYSTONE: VERY SOFT (H7), AND VERY INTENSELY WEATHERED (W8), FROM 18.0 TO 18.5 FT. SOFT (H6) AND MODERATELY WEATHERED (W5) FROM 18.5 TO 32.5 FT. GREY IN COLOR, MOTTLED, LAMINATED, CARBONACEOUS FRAGMENTS, COAL LAMINATIONS, GYPSUM NODULES, AND IRON OXIDE STAINING. BECOMES MORE CARBONACEOUS WITH INCREASED COAL LAMINATIONS FROM 29.0 TO 34.0 FT.

32.5 TO 45.0 FT SHALE: SLIGHTLY FISSILE, FRIABLE, SLIGHTLY TO MODERATELY WEATHERED (W4) MODERATELY SOFT (H5), CARBONACEOUS, LAMINATED TO THINLY BEDDED, COAL LAMINATIONS, BROWN TO BLACK IN COLOR, GYPSUM VEINS, AND IRON OXIDE STAINING. NO REACTION WITH HCl.

END OF HOLE, TOTAL DEPTH= 45.0

STRATIGRAPHY:
0.0 - 18.0 FT QUATERNARY PEDIMENT DEPOSIT (Qpd)
18.0 - 45.0 FT CRETACEOUS MENEFEE FORMATION (Kmf)

COMMENTS:

THE DATA FOR THE CENTER COLUMN AND "CLASSIFICATION AND PHYSICAL CONDITIONS" COLUMN ARE BASED ON BUREAU OF RECLAMATION GEOLOGY FIELD MANUAL AND DRAWINGS TITLED FOR DESIGNS AND SPECIFICATIONS AS FOLLOWS- DRAWING NO. 40-D-6493. STANDARD DESCRIPTIONS AND DESCRIPTIVE CRITERIA FOR ROCK. DRAWING NO. 40-D-6499. STANDARD DESCRIPTORS AND DESCRIPTIVE CRITERIA FOR DISCONTINUITIES. ALL ANGLES MEASURED FROM CORE AXIS AT ZERO DEGREES, UNLESS OTHERWISE NOTED.

HSA= HOLLOW STEM AUGER SSA= SOLID STEM AUGER NE= NOT ENCOUNTERED NA= NOT AVAILABLE NP= NON PLASTIC SS= SANDSTONE CLSTNE= CLAYSTONE
SPT= STANDARD PENETRATION TEST FeOx= IRON OXIDE MnOx= MANGANESE OXIDE HCl= HYDROCHLORIC ACID

GEOLOGIC LOG OF DRILL HOLE NO. DHSTR7-16- 6

FEATURE: Pumping Plant 4
LOCATION: Site Investigation
BEGUN: 3/23/16 FINISHED: 3/23/16
DEPTH AND ELEVATION OF WATER LEVEL: NE
DATE MEASURED: 3/23/2016

PROJECT: Navajo Gallup Water Supply Project
COORDINATES: N 1,884,780.2 E 2,464,015.5 N.M. State Plane
TOTAL DEPTH: 50.5
DEPTH TO BEDROCK: 12.6

STATE: New Mexico
GROUND ELEVATION: 5871.1 ft. NAD-83
ANGLE FROM HORIZONTAL: -90
HOLE LOGGED BY: C. Beyer
REVIEWED BY: J. Gilbert

NOTES

ALL MEASUREMENTS ARE FROM GROUND LEVEL AND ARE THE SAME AS THOSE USED BY DRILLER.

ALL MEASUREMENTS ARE REPORTED IN FEET EXCEPT WHERE NOTED.

DRILLED BY:
UPPER COLORADO DRILL CREW
DRILLER: KYLE KILLEBREW
HELPER: JOE PROCTOR
HELPER: RENATO MATHESON

PURPOSE:
PRECONSTRUCTION SOIL AND BEDROCK FOUNDATION INVESTIGATIONS.

DRILL EQUIPMENT:
CME MODEL 85 TRUCK MOUNTED ROTARY DRILL RIG.

DRILL METHOD:
0.0 TO 7.0 FT: 4 1/4" SSA WITH PILOT BIT.
7.0 TO 13.0 FT: 4 1/4" HSA AND DRY CORE SYSTEM.
13.0 TO 50.5 FT: 4 1/4" HSA AND DRY CORE SYSTEM WITH CALIFORNIA SAMPLER.

CASING RECORD:
NONE USED

DRILLING MEDIUM:
0.0 TO 50.5 FT: NONE

DRILLING NOTES:
PILOT BIT USED TO PENETRATE PEDIMENT DEPOSIT. NO SPTS WERE CONDUCTED. VERY DIFFICULT AUGERING THROUGH PEDIMENT DEPOSIT. 50 POUND BAG SAMPLE COLLECTED FROM 0.0 TO 7.0 FT. THE CALIFORNIA SAMPLE TUBE PROVIDED WAS NOT A SPLIT SPOON SAMPLER. BRASS TUBES WERE REMOVED WITH A WOODEN DOWEL AND HAMMER. SAMPLE QUALITY MAY HAVE BEEN COMPROMISED. IN ADDITION, PLASTIC WRAP AND DUCT TAPE USED TO PRESERVE MOISTURE OF SOME SAMPLES. A SPLIT SAMPLE TUBE AND PLASTIC CAPS WERE MAILED OVERNIGHT.

HOLE COMPLETION:
BACKFILLED WITH BENTONITE.

SAMPLING:
13.0 TO 14.0 FT: CALIFORNIA SAMPLE
15.5 TO 16.5 FT: CALIFORNIA SAMPLE
18.0 TO 19.0 FT: CALIFORNIA SAMPLE
20.5 TO 21.5 FT: CALIFORNIA SAMPLE
23.0 TO 24.0 FT: CALIFORNIA SAMPLE
25.5 TO 26.5 FT: CALIFORNIA SAMPLE
28.0 TO 29.0 FT: CALIFORNIA SAMPLE
30.5 TO 31.5 FT: CALIFORNIA SAMPLE
33.0 TO 34.0 FT: CALIFORNIA SAMPLE
35.5 TO 36.5 FT: CALIFORNIA SAMPLE
38.0 TO 39.0 FT: CALIFORNIA SAMPLE
40.5 TO 41.5 FT: CALIFORNIA SAMPLE
43.0 TO 44.0 FT: CALIFORNIA SAMPLE
45.0 TO 46.0 FT: CALIFORNIA SAMPLE
48.0 TO 49.0 FT: CALIFORNIA SAMPLE
(NO RECOVERY)

DEPTH	GEOLOGIC SYMBOL	% CORE RECOVERY	% RQD	HARDNESS	WEATHERING	% FINES	% SAND	% GRAVEL	LIQUID LIMIT	PLASTICITY INDEX	MOISTURE CONTENT	LABORATORY CLASSIFICATION	BLOWS / 0.5 FT	VISUAL CLASSIFICATION
	Qpd	PILOT												(GP)sc
5		0												
		0												
10		30												
				7	8									5858.5
	Kmf	PILOT											28/27	
15														
		80											19/27	
		84											15/29	
20														
		76											16/27	
		92		6	5								21/44	CLSTNE
25														
		72											25/REFUSAL	
		100											42/REFUSAL	
30														
	Kmf	92											39/REFUSAL	
		100											REFUSAL	
35														5836.1
		100		5									47/REFUSAL	SHALE
														5833.6
		100		6									41/REFUSAL	COAL
40														
		100											REFUSAL	5829.4
					4									
		100											REFUSAL	
45														
		100		5									REFUSAL	SHALE
		100											REFUSAL	
50														5820.6

BOTTOM OF HOLE

CLASSIFICATION AND PHYSICAL CONDITION

0.0 TO 12.6 FT QUATERNARY PEDIMENT DEPOSIT (Qpd)

0.0 TO 12.6 FT POORLY GRADED GRAVEL WITH SAND AND COBBLES (GP)sc: ABOUT 60% PREDOMINATELY FINE SUBANGULAR, HARD, SANDSTONE, CHERT AND PETRIFIED WOOD GRAVEL, TRACE COARSE GRAVEL; ABOUT 30% PREDOMINATELY FINE SAND, TRACE MEDIUM TO COARSE SAND; ABOUT 10% NONPLASTIC FINES WITH RAPID DILATANCY AND NO DRY STRENGTH.

TOTAL SAMPLE (BY VOLUME): ABOUT 10% 3 TO 5 INCH HARD, SUBANGULAR TO SUBROUNDED SANDSTONE, BASALT AND MINETTE COBBLES; REMAINDER MINUS 3-INCH; MAXIMUM SIZE,125mm.

12.6 TO 50.5 FT CRETACEOUS MENEFEE FORMATION (Kmf)

12.6 TO 35.0 FT CLAYSTONE: VERY SOFT (H7), AND VERY INTENSELY WEATHERED (W8), FROM 12.6 TO 13.2 FT. SOFT (H6) AND MODERATELY WEATHERED (W5) FROM 13.2 TO 35.0 FT. GREY IN COLOR, MOTTLED, THINLY BEDDED TO LAMINATED, CARBONACEOUS FRAGMENTS, COAL LAMINATIONS, GYPSUM NODULES, AND IRON OXIDE STAINING.

35.0 TO 37.5 FT SHALE: SLIGHTLY FISSILE, FRIABLE, SLIGHTLY TO MODERATELY WEATHERED (W4) MODERATELY SOFT (H5), CARBONACEOUS, LAMINATED TO THINLY BEDDED, COAL LAMINATIONS, BROWN TO BLACK IN COLOR, GYPSUM VEINS, AND IRON OXIDE STAINING. NO REACTION WITH HCI.

37.5 TO 41.7 FT COAL: LIGNITIC, BROWNISH BLACK IN COLOR, SOFT (H6), MODERATELY TO SLIGHTLY WEATHERED (W4), BRITTLE, DULL LUSTER, THINLY BEDDED TO LAMINATED, NO REACTION WITH HCI.

41.7 TO 50.5 FT SHALE: SLIGHTLY FISSILE, FRIABLE, SLIGHTLY TO MODERATELY WEATHERED (W4) MODERATELY SOFT (H5), CARBONACEOUS, LAMINATED TO THINLY BEDDED, COAL LAMINATIONS, BROWN TO BLACK IN COLOR, GYPSUM VEINS, AND IRON OXIDE STAINING. NO REACTION WITH HCI.

JOINT MEASUREMENTS:

DEPTH	INCL	R	M	T	HL	INFILLING
41.7-48.8	90	5	2	3	5	IRON OXIDE

END OF HOLE, TOTAL DEPTH= 50.5

STRATIGRAPHY:
0.0 - 12.6 FT QUATERNARY PEDIMENT DEPOSIT (Qpd)
12.6 - 50.5 FT CRETACEOUS MENEFEE FORMATION (Kmf)

COMMENTS:

THE DATA FOR THE CENTER COLUMN AND "CLASSIFICATION AND PHYSICAL CONDITIONS" COLUMN ARE BASED ON BUREAU OF RECLAMATION GEOLOGY FIELD MANUAL AND DRAWINGS TITLED FOR DESIGNS AND SPECIFICATIONS AS FOLLOWS- DRAWING NO. 40-D-6493. STANDARD DESCRIPTIONS AND DESCRIPTIVE CRITERIA FOR ROCK. DRAWING NO. 40-D-6499. STANDARD DESCRIPTORS AND DESCRIPTIVE CRITERIA FOR DISCONTINUITIES. ALL ANGLES MEASURED FROM CORE AXIS AT ZERO DEGREES, UNLESS OTHERWISE NOTED.

HSA= HOLLOW STEM AUGER SSA= SOLID STEM AUGER NE= NOT ENCOUNTERED NA= NOT AVAILABLE NP= NON PLASTIC SS= SANDSTONE CLSTNE= CLAYSTONE
SPT= STANDARD PENETRATION TEST FeOx= IRON OXIDE MnOx= MANGANESE OXIDE HCl= HYDROCHLORIC ACID

GEOLOGIC LOG OF DRILL HOLE NO. DHSTR7-16- 7

FEATURE: Pumping Plant 4
LOCATION: Site Investigation
BEGUN: 3/28/16 FINISHED: 3/28/16
DEPTH AND ELEVATION OF WATER LEVEL: NE
DATE MEASURED: 3/28/2016

PROJECT: Navajo Gallup Water Supply Project
COORDINATES: N 1,884,652.7 E 2,464,095.3 N.M. State Plane
TOTAL DEPTH: 45.0
DEPTH TO BEDROCK: 20.1

STATE: New Mexico
GROUND ELEVATION: 5869.1 ft. NAD-83
ANGLE FROM HORIZONTAL: -90
HOLE LOGGED BY: C. Beyer
REVIEWED BY: J. Gilbert

NOTES

ALL MEASUREMENTS ARE FROM GROUND LEVEL AND ARE THE SAME AS THOSE USED BY DRILLER.

ALL MEASUREMENTS ARE REPORTED IN FEET EXCEPT WHERE NOTED.

DRILLED BY:
UPPER COLORADO DRILL CREW
DRILLER: KYLE KILLEBREW
HELPER: JOE PROCTOR
HELPER: RENATO MATHESON

PURPOSE:
PRECONSTRUCTION SOIL AND BEDROCK FOUNDATION INVESTIGATIONS.

DRILL EQUIPMENT:
CME MODEL 85 TRUCK MOUNTED ROTARY DRILL RIG.

DRILL METHOD:
0.0 TO 13.0 FT: 4 1/4" SSA WITH PILOT BIT.
13.0 TO 20.5 FT: 4 1/4" HSA AND DRY CORE SYSTEM WITH SPTS.
20.5 TO 45.0 FT 4 1/4" HSA AND DRY CORE SYSTEM WITH CALIFORNIA SAMPLER.

CASING RECORD:
NONE USED

DRILLING MEDIUM:
0.0 TO 45.0 FT: NONE

DRILLING NOTES:
PILOT BIT USED TO PENETRATE PEDIMENT GRAVEL DEPOSIT. NO SPTS WERE CONDUCTED IN GRAVEL. VERY DIFFICULT AUGERING THROUGH PEDIMENT GRAVEL. REACHED REFUSAL AT 2.0 FT ON FIRST ATTEMPT. MOVED ABOUT 4 FEET NORTHEAST AND RESUMED DRILLING.

HOLE COMPLETION:
BACKFILLED WITH BENTONITE.

SAMPLES:
13.0 TO 14.5 FT: SPT
15.5 TO 17.0 FT: SPT
18.0 TO 19.5 FT: SPT
20.5 TO 21.5 FT: CALIFORNIA SAMPLE
23.0 TO 24.0 FT: CALIFORNIA SAMPLE
28.0 TO 29.0 FT: CALIFORNIA SAMPLE
33.0 TO 34.0 FT: CALIFORNIA SAMPLE
38.0 TO 39.0 FT: CALIFORNIA SAMPLE
43.0 TO 44.0 FT: CALIFORNIA SAMPLE

DEPTH	GEOLOGIC SYMBOL	% CORE RECOVERY	% RQD	HARDNESS	WEATHERING	% FINES	% SAND	% GRAVEL	LIQUID LIMIT	PLASTICITY INDEX	MOISTURE CONTENT	LABORATORY CLASSIFICATION	BLOWS / 0.5 FT	VISUAL CLASSIFICATION
5	Qpd	PILOT												(SP-SM)gcb
10														5859.1
														(SP-SM)
		100				46.6	53.4	0.0	NA	NP	2.7	SM	10/17/20	
15														5854.1
		100				66.2	33.1	0.7	22.0	6.1	3.4 s	(CL-ML)	20/32/29	
														SC
		100				72.1	27.9	0.0	20.4	1.8	3.6	(ML)s	15/29/34	
20														5849.0
	Kmf	100		7	8								22/50	
													17/25	
25		100												
				6	5									CLSTNE
													17/48	
30		100												
													44/REFUSAL	
35		100												5834.1
													32/REFUSAL	
40		100		5	4									SHALE
		100											REFUSAL	
45														5824.1

BOTTOM OF HOLE

CLASSIFICATION AND PHYSICAL CONDITION

0.0 TO 20.1 FT QUATERNARY PEDIMENT DEPOSIT (Qpd)

0.0 TO 10.0 FT POORLY GRADED SAND WITH SILT AND GRAVEL, COBBLES AND BOULDERS (SP-SM)gcb: ABOUT 50% PREDOMINATELY FINE SAND, TRACE MEDIUM TO COARSE SAND; ABOUT 40% FINE TO COARSE SUBANGULAR, HARD, SANDSTONE, CHERT AND PETRIFIED WOOD GRAVEL; ABOUT 10% NONPLASTIC FINES WITH RAPID DILATANCY AND NO DRY STRENGTH; DRY, GRAY IN COLOR, STRONG REACTION WITH HCl.

TOTAL SAMPLE (BY VOLUME): ABOUT 5% 3 TO 5 INCH HARD, SUBANGULAR TO SUBROUNDED SANDSTONE, BASALT AND MINETTE COBBLES; ABOUT 5% 5 TO 12 INCH HARD, SUBANGULAR TO SUBROUNDED SANDSTONE, BASALT AND MINETTE COBBLES; TRACE HARD, SUBANGULAR SANDSTONE BOULDERS; REMAINDER MINUS 3-INCH; MAXIMUM SIZE, 450mm.

10.0 TO 15.0 FT POORLY GRADED SAND WITH SILT (SP-SM): ABOUT 90% PREDOMINATELY FINE SAND, TRACE MEDIUM TO COARSE SAND; ABOUT 10% NONPLASTIC FINES WITH RAPID DILATANCY AND NO DRY STRENGTH; TRACE SUBANGULAR, HARD, SANDSTONE GRAVEL; MAXIMUM SIZE, 20mm; DRY, BROWN IN COLOR; STONG REACTION WITH HCl.

15.0 TO 20.1 FT CLAYEY SAND (SC): ABOUT 80% PREDOMINATELY FINE SAND; ABOUT 20% FINES WITH LOW PLASTICITY, LOW DRY STRENGTH AND LOW TOUGHNESS; TRACE MEDIUM TO COARSE SAND; GRAY IN COLOR; DRY; STRONG REACTION WITH HCl.

20.1 TO 45.0 FT CRETACEOUS MENEFEE FORMATION (Kmf)

20.1 TO 35.0 FT CLAYSTONE: VERY SOFT (H7), AND VERY INTENSELY WEATHERED (W8), FROM 20.1 TO 20.6 FT. SOFT (H6) AND MODERATELY WEATHERED (W5) FROM 20.6 TO 35.0 FT. GREY IN COLOR, MOTTLED, THINLY BEDDED TO LAMINATED, CARBONACEOUS FRAGMENTS, COAL LAMINATIONS, GYPSUM NODULES, AND IRON OXIDE STAINING.

35.0 TO 45.0 FT SHALE: SLIGHTLY FISSILE, FRIABLE, SLIGHTLY TO MODERATELY WEATHERED (W4) MODERATELY SOFT (H5), CARBONACEOUS, LAMINATED TO THINLY BEDDED, COAL LAMINATIONS, BROWN TO BLACK IN COLOR, GYPSUM VEINS, AND IRON OXIDE STAINING. NO REACTION WITH HCl.

END OF HOLE, TOTAL DEPTH= 45.0

STRATIGRAPHY:
0.0 - 20.1 FT QUATERNARY PEDIMENT DEPOSIT (Qpd)
20.1 - 45.0 FT CRETACEOUS MENEFEE FORMATION (Kmf)

COMMENTS:

THE DATA FOR THE CENTER COLUMN AND "CLASSIFICATION AND PHYSICAL CONDITIONS" COLUMN ARE BASED ON BUREAU OF RECLAMATION GEOLOGY FIELD MANUAL AND DRAWINGS TITLED FOR DESIGNS AND SPECIFICATIONS AS FOLLOWS- DRAWING NO. 40-D-6493. STANDARD DESCRIPTIONS AND DESCRIPTIVE CRITERIA FOR ROCK. DRAWING NO. 40-D-6499. STANDARD DESCRIPTORS AND DESCRIPTIVE CRITERIA FOR DISCONTINUITIES. ALL ANGLES MEASURED FROM CORE AXIS AT ZERO DEGREES, UNLESS OTHERWISE NOTED.

HSA= HOLLOW STEM AUGER SSA= SOLID STEM AUGER NE= NOT ENCOUNTERED NA= NOT AVAILABLE NP= NON PLASTIC SS= SANDSTONE CLSTNE= CLAYSTONE
SPT= STANDARD PENETRATION TEST FeOx= IRON OXIDE MnOx= MANGANESE OXIDE HCl= HYDROCHLORIC ACID

GEOLOGIC LOG OF DRILL HOLE NO. DHSTR7-16- 8

FEATURE: Pumping Plant 4
LOCATION: Site Investigation
BEGUN: 8/2/16 FINISHED: 8/2/16
DEPTH AND ELEVATION OF WATER LEVEL: NE
DATE MEASURED: 8/2/2016

PROJECT: Navajo Gallup Water Supply Project
COORDINATES: N 1,885,079.2 E 2,464,339.0 N.M. State Plane
TOTAL DEPTH: 21.5
DEPTH TO BEDROCK: 20.2

STATE: New Mexico
GROUND ELEVATION: 5862.6 ft. NAD-83
ANGLE FROM HORIZONTAL: -90
HOLE LOGGED BY: P. Gardner
REVIEWED BY: J. Gilbert

NOTES

All measurements are from ground level and are the same as those used by drillers.

All measurements are reported in feet except where noted.

DRILLED BY:
Great Plains Drill Crew
DRILLER: Sean Rafferty
HELPER: Bob Sammons

PURPOSE:
Preconstruction soil and bedrock foundation investigations.

DRILL EQUIPMENT:
CME Model 85 truck mounted rotary drill rig.

DRILL METHOD:
0.0 to 20.0: 4.25 inch HSA with pilot bit.
20.0 to 21.5: 4.25 inch HSA with SPT

CASING RECORD:
None used

DRILLING MEDIUM:
0.0 to 21.5: None

DRILLING NOTES:
0.0 to 20.0: Difficult with pilot bit to 14.8.
20.0 to 21.5: SPT

HOLE COMPLETION:
Backfilled with bentonite and cuttings.

SAMPLES:
20.0 to 21.5: SPT

DEPTH	GEOLOGIC SYMBOL	% CORE RECOVERY	% RQD	HARDNESS	WEATHERING	LABORATORY DATA: % FINES	% SAND	% GRAVEL	LIQUID LIMIT	PLASTICITY INDEX	MOISTURE CONTENT	LABORATORY CLASSIFICATION	BLOWS / 0.5 FT	VISUAL CLASSIFICATION
5														
10	Qpd	NR												Cobbles and Boulders
15														
20														5842.4
	Kmf	93	NA	6	8	55.8	40.4	3.8	31.0	20.3	9.0	s(CL)	8/17/15	CLSTNE
														5841.1

BOTTOM OF HOLE

CLASSIFICATION AND PHYSICAL CONDITION

0.0 to 20.2 ft QUATERNARY PEDIMENT DEPOSIT (Qpd)

0.0 to 14.8 ft COBBLES AND BOULDERS WITH SILTY GRAVEL AND SAND: Visual classification from test pit 50 feet to the south of drill hole with about 60% 3 to 5 inch hard, subrounded to subangular cobbles; about 20% 5 to 12 inch hard, subangular to subrounded cobbles; about 15% hard, subrounded boulders; remainder minus 3 inch; maximum size, 1000mm. Bottom of interval determined by drill action.

MINUS 3 inch FRACTION (BY MASS): About 50% hard, subrounded gravel; about 30% fine to medium, subrounded sand; about 20% nonplastic fines; no reaction with HCl.

0.0 to 20.0 ft Pilot Bit: Recovered cuttings as silt and sand with hard, subangular to angular gravels. Strong reaction with HCl.

20.0 to 20.2 ft SILTY SAND WITH GRAVEL (SM)g: About 70% fine to coarse, hard sand; about 15% fine, hard, subangular to angular gravels; about 15% nonplastic fines; light brown and dry; strong reaction with HCl.

20.2 to 21.5 ft CRETACEOUS MENEFEE FORMATION (Kmf)

20.2 to 21.5 ft CLAYSTONE: Brownish gray and orange in color. Soft (H6) and very intensely weathered (W8). FeOx staining present.

STRATIGRAPHY:
0.0 to 20.2 ft QUATERNARY PEDIMENT DEPOSIT (Qpd)
20.2 to 21.5 ft CRETACEOUS MENEFEE FORMATION (Kmf)

COMMENTS:

HSA= hollow stem auger NA= not available ft= feet NE= not encountered NP= non plastic NR= no recovery HCl= hydrochloric acid FeOx= iron oxide CaCOx= calcium carbonate MnOx= manganese oxide SPT= standard penetration test HQ3= coring system SS= sandstone CLSTNE= claystone

The data for the center column and "classification and physical conditions" column are based on Bureau of Reclamation Geology Field Manual and Drawing Titled for designs and specification as follows "Drawing No. 40-D-6493 Standard Descriptions and Descriptive Criteria for rock. Drawing No. 40-D-6499 Standard Descriptors and Descriptive Criteria for Discontinuities.

GEOLOGIC LOG OF DRILL HOLE NO. DHSTR7-16- 9

FEATURE: Pumping Plant 4
LOCATION: Tank Site
BEGUN: 7/28/16 FINISHED: 7/28/16
DEPTH AND ELEVATION OF WATER LEVEL: NE
DATE MEASURED: 7/28/2016

PROJECT: Navajo Gallup Water Supply Project
COORDINATES: N 1,885,016.6 E 2,464,274.7 N.M. State Plane
TOTAL DEPTH: 20.5
DEPTH TO BEDROCK: NE

STATE: New Mexico
GROUND ELEVATION: 5865.0 ft. NAD-83
ANGLE FROM HORIZONTAL: -90
HOLE LOGGED BY: P. Gardner, C. Beyer
REVIEWED BY: J. Gilbert

NOTES

All measurements are from ground level and are the same as those used by drillers.

All measurements are reported in feet except where noted.

DRILLED BY:
Great Plains Drill Crew
DRILLER: Sean Rafferty
HELPER: Bob Sammons

PURPOSE:
Preconstruction soil and bedrock foundation investigations.

DRILL EQUIPMENT:
CME Model 85 truck mounted rotary drill rig.

DRILL METHOD:
0.0 to 9.0: 4.25 inch HSA with pilot bit.
9.0 to 20.5: 4.25 inch HSA dry core system with SPT.

CASING RECORD:
None used

DRILLING MEDIUM:
0.0 to 20.5: None

DRILLING NOTES:
0.0 to 9.0: Difficult with pilot bit
9.0 to 20.5: Easy drilling

HOLE COMPLETION:
Backfilled with bentonite and cuttings.

SAMPLING:
14.0 to 15.5: SPT
19.0 to 20.5: SPT

DEPTH	GEOLOGIC SYMBOL	% CORE RECOVERY	% RQD	HARDNESS	WEATHERING	LABORATORY DATA: % FINES	% SAND	% GRAVEL	LIQUID LIMIT	PLASTICITY INDEX	MOISTURE CONTENT	LABORATORY CLASSIFICATION	BLOWS / 0.5 FT	VISUAL CLASSIFICATION
	Qpd	NR												Cobbles and Boulders
5														
10		14												5851.0
		93				14.2	73.7	12.1	NA	NP	2.0	SM	18/31/30	SM
15														5849.5
		NR												5846.0
		93				19.8	35.0	45.2	NA	NP	2.4	(GM)s	10/16/20	(SP-SM)g
20														5844.5

BOTTOM OF HOLE

CLASSIFICATION AND PHYSICAL CONDITION

0.0 to 20.5 ft QUATERNARY PEDIMENT DEPOSIT (Qpd)

0.0 to 9.0: COBBLES AND BOULDERS WITH SILTY SAND AND GRAVEL: Visual classification from test pit 50 feet to the south of drill hole with about 60% 3 to 5 inch hard, subrounded to subangular cobbles; about 10% 5 to 12 inch hard, subangular to subrounded cobbles; about 10% hard, subrounded boulders; remainder minus 3 inch; maximum size, 700mm. Bottom of interval determined by drill action.

MINUS 3 inch FRACTION (BY MASS): About 50% fine to medium, subrounded sand; about 30% hard, subrounded gravel; about 20% nonplastic fines; dry and tan in color; no reaction with HCl.

0.0 to 9.0 ft Pilot Bit: Recovered cuttings as silt and sand with hard, subangular to angular gravel. Strong reaction with HCl.

9.0 to 14.0 ft Poor Recovery: Materials recovered were approx. 80% fine to coarse, hard sand; approx. 10% fine to coarse, hard, subangular to angular gravel; approx. 10% nonplastic fines; light brown and dry; strong reaction with HCl.

14.0 to 15.5 ft SILTY SAND (SM): About 75% fine to coarse, hard sand; about 15% nonplastic fines; about 10% fine to coarse, hard, subangular to angular gravel; light brown and dry; strong reaction with HCl.

15.5 to 19.0 ft Poor Recovery: Materials recovered were approx. 80% fine to coarse, hard sand; approx. 10% fine to coarse, hard, subangular to angular gravel; approx. 10% nonplastic fines; light brown and dry; strong reaction with HCl.

19.0 to 20.5 ft POORLY GRADED SAND WITH SILT AND GRAVEL (SP-SM)g: About 60% fine to coarse, hard sand; about 30% fine, hard gravel; about 10% fines with no plasticity; maximum size, 10mm; light brown and dry; strong reaction with HCl.

STRATIGRAPHY:
0.0 to 20.5 ft QUATERNARY PEDIMENT DEPOSIT (Qpd)

COMMENTS:

HSA= hollow stem auger NA= not available ft= feet NE= not encountered NP= non plastic NR= no recovery HCl= hydrochloric acid FeOx= iron oxide CaCOx= calcium carbonate MnOx= manganese oxide SPT= standard penetration test HQ3= coring system SS= sandstone CLSTNE= claystone

The data for the center column and "classification and physical conditions" column are based on Bureau of Reclamation Geology Field Manual and Drawing Titled for designs and specification as follows "Drawing No. 40-D-6493 Standard Descriptions and Descriptive Criteria for rock. Drawing No. 40-D-6499 Standard Descriptors and Descriptive Criteria for Discontinuities.

GEOLOGIC LOG OF DRILL HOLE NO. DHSTR7-16-10

FEATURE: Pumping Plant 4
LOCATION: Tank Site
BEGUN: 8/1/16 FINISHED: 8/1/16
DEPTH AND ELEVATION OF WATER LEVEL: NE
DATE MEASURED: 8/1/2016

PROJECT: Navajo Gallup Water Supply Project
COORDINATES: N 1,885,048.8 E 2,464,169.7 N.M. State Plane
TOTAL DEPTH: 25.5
DEPTH TO BEDROCK: 24.1

STATE: New Mexico
GROUND ELEVATION: 5865.2 ft. NAD-83
ANGLE FROM HORIZONTAL: -90
HOLE LOGGED BY: P. Gardner
REVIEWED BY: J. Gilbert

NOTES

All measurements are from ground level and are the same as those used by drillers.

All measurements are reported in feet except where noted.

DRILLED BY:
Great Plains Drill Crew
DRILLER: Sean Rafferty
HELPER: Bob Sammons

PURPOSE:
Preconstruction soil and bedrock foundation investigations.

DRILL EQUIPMENT:
CME Model 85 truck mounted rotary drill rig.

DRILL METHOD:
0.0 to 17.5: 4.25 inch HSA with pilot bit.
17.5 to 25.5: 4.25 inch HSA dry core system with SPT.

CASING RECORD:
None used

DRILLING MEDIUM:
0.0 to 25.5: None

DRILLING NOTES:
0.0 to 17.5: Difficult with pilot bit.
17.5 to 25.5: Dry core with SPT.

HOLE COMPLETION:
Backfilled with bentonite and cuttings.

SAMPLING:
19.0 to 20.5: SPT
24.0 to 25.5: SPT

DEPTH	GEOLOGIC SYMBOL	% CORE RECOVERY	% RQD	HARDNESS	WEATHERING	LABORATORY DATA: % FINES	% SAND	% GRAVEL	LIQUID LIMIT	PLASTICITY INDEX	MOISTURE CONTENT	LABORATORY CLASSIFICATION	BLOWS / 0.5 FT	VISUAL CLASSIFICATION
5	Qpd	NR												Cobbles and Boulders
10														
15														
														5847.7
		27												
20						25.8	73.1	1.1	NA	NP	3.7	SM	13/17/19	
		4												(SP-SM)g
														5841.1
25	Kmf	100		6	8	96.3	21.5	3.7	65.8	44.2	17.6	CH	8/16/21	CLSTNE
														5839.7

BOTTOM OF HOLE

CLASSIFICATION AND PHYSICAL CONDITION

0.0 to 24.1 ft QUATERNARY PEDIMENT DEPOSIT (Qpd)

0.0 to 17.5 ft COBBLES AND BOULDERS WITH SILTY SAND WITH GRAVEL: Visual classification from test pit 130 feet to the west of drill hole with about 65% 3 to 5 inch hard, subrounded to subangular cobbles; about 20% 5 to 12 inch hard, subangular to subrounded cobbles; about 5% hard, subrounded boulders; remainder minus 3 inch; maximum size, 700mm. Bottom of interval determined by drill action.

MINUS 3 inch FRACTION (BY MASS): About 50% fine to medium, subrounded sand; about 30% hard, subrounded gravel; about 20% nonplastic fines; no reaction with HCl.

0.0 to 17.5 ft Pilot Bit: Recovered cuttings as silt and sand with hard, subangular to angular gravel. Strong reaction with HCl.

17.5 to 24.1 ft POORLY GRADED SAND WITH SILT AND GRAVEL (SP-SM)g: About 70% fine to coarse, hard sand; about 20% fine, hard, subangular to angular gravel; about 10% nonplastic fines; light brown to gray and dry; strong reaction with HCl.

24.1 to 25.5 ft CRETACEOUS MENEFEE FORMATION (Kmf)

24.1 to 25.5 ft CLAYSTONE: Brownish gray and tan to orange in color. Soft (H6) and very intensely weathered (W8). FeOx staining present.

STRATIGRAPHY:
0.0 to 24.1 ft QUATERNARY PEDIMENT DEPOSIT (Qpd)
24.1 to25.5 ft CRETACEOUS MENEFEE FORMATION (Kmf)

COMMENTS:

HSA= hollow stem auger NA= not available ft= feet NE= not encountered NP= non plastic NR= no recovery HCl= hydrochloric acid FeOx= iron oxide CaCOx= calcium carbonate MnOx= manganese oxide SPT= standard penetration test HQ3= coring system SS= sandstone CLSTNE= claystone

The data for the center column and "classification and physical conditions" column are based on Bureau of Reclamation Geology Field Manual and Drawing Titled for designs and specification as follows "Drawing No. 40-D-6493 Standard Descriptions and Descriptive Criteria for rock. Drawing No. 40-D-6499 Standard Descriptors and Descriptive Criteria for Discontinuities.

GEOLOGIC LOG OF DRILL HOLE NO. DHSTR7-16-11

FEATURE: Pumping Plant 4
LOCATION: Site Investigation
BEGUN: 8/2/16 FINISHED: 8/2/16
DEPTH AND ELEVATION OF WATER LEVEL: NE
DATE MEASURED: 8/2/2016

PROJECT: Navajo Gallup Water Supply Project
COORDINATES: N 1,885,093.8 E 2,464,076.3 N.M. State Plane
TOTAL DEPTH: 20.0
DEPTH TO BEDROCK: 16.8

STATE: New Mexico
GROUND ELEVATION: 5864.9 ft. NAD-83
ANGLE FROM HORIZONTAL: -90
HOLE LOGGED BY: P. Gardner
REVIEWED BY: J. Gilbert

NOTES

All measurements are from ground level and are the same as those used by drillers.

All measurements are reported in feet except where noted.

DRILLED BY:
Great Plains Drill Crew
DRILLER: Sean Rafferty
HELPER: Bob Sammons

PURPOSE:
Preconstruction soil and bedrock foundation investigations.

DRILL EQUIPMENT:
CME Model 85 truck mounted rotary drill rig.

DRILL METHOD:
0.0 to 15.0: 4.25 inch HSA with pilot bit.
15.0 to 20.0: 4.25 inch HSA and dry core system with California Sampler.

CASING RECORD:
None used

DRILLING MEDIUM:
0.0 to 20.0: None

DRILLING NOTES:
0.0 to 13.1: Difficult with pilot bit.
13.1 to 15.0: Drilling became easy.
15.0 to 20.0: HSA with California Sampler.

HOLE COMPLETION:
Backfilled with bentonite and cuttings.

SAMPLING:
19.0 to 20.0: California Sample

DEPTH	GEOLOGIC SYMBOL	% CORE RECOVERY	% RQD	HARDNESS	WEATHERING	% FINES	% SAND	% GRAVEL	LIQUID LIMIT	PLASTICITY INDEX	MOISTURE CONTENT	LABORATORY CLASSIFICATION	BLOWS / 0.5 FT	VISUAL CLASSIFICATION
	Qpd													Cobbles and Boulders
15														5849.9
														(SM)g
														5848.1
	Kmf	83		6	8									CLSTNE
		NA											14/22	
20														5844.9

BOTTOM OF HOLE

CLASSIFICATION AND PHYSICAL CONDITION

0.0 to 16.8 ft QUATERNARY PEDIMENT DEPOSIT (Qpd)

0.0 to 13.1 ft COBBLES AND BOULDERS WITH SILTY SAND AND GRAVEL: Visual classification from test pit 175 feet to the south of drill hole with about 65% 3 to 5 inch hard, subrounded to subangular cobbles; about 20% 5 to 12 inch hard, subangular to subrounded cobbles; about 5% hard, subrounded boulders; remainder minus 3 inch; maximum size, 700mm. Bottom of interval determined by drill action.

MINUS 3 inch FRACTION (BY MASS): About 50% fine to medium, subrounded sand; about 30% hard, subrounded gravel; about 20% nonplastic fines; no reaction with HCl.

0.0 to 15.0 ft Pilot Bit: Recovered cuttings as silt and sand with hard, subangular to angular gravels. Strong reaction with HCl

15.0 to 16.8 ft SILTY SAND WITH GRAVEL (SM)g: About 70% fine sand; about 15% fine, hard, subrounded to subangular gravel; about 15% nonplastic fines; maximum size, 20mm; light brown and dry; strong reaction with HCl.

16.8 to 20.0 ft CRETACEOUS MENEFEE FORMATION (Kmf)

16.8 to 20.0 ft CLAYSTONE: Brownish gray in color. Soft (H6) and very intensely weathered (W8). FeOx staining present.

STRATIGRAPHY:
0.0 to 16.8 ft QUATERNARY PEDIMENT(Qpd)
16.8 to 20.0 ft CRETACEOUS MENEFEE FORMATION (Kmf)

COMMENTS:

HSA= hollow stem auger NA= not available ft= feet NE= not encountered NP= non plastic NR= no recovery HCl= hydrochloric acid FeOx= iron oxide CaCOx= calcium carbonate MnOx= manganese oxide SPT= standard penetration test HQ3= coring system SS= sandstone CLSTNE= claystone

The data for the center column and "classification and physical conditions" column are based on Bureau of Reclamation Geology Field Manual and Drawing Titled for designs and specification as follows "Drawing No. 40-D-6493 Standard Descriptions and Descriptive Criteria for rock. Drawing No. 40-D-6499 Standard Descriptors and Descriptive Criteria for Discontinuities.

GEOLOGIC LOG OF DRILL HOLE NO. DHSTR7-16-12

FEATURE: Pumping Plant 4
LOCATION: Site Investigation
BEGUN: 8/4/16 FINISHED: 8/4/16
DEPTH AND ELEVATION OF WATER LEVEL: NE
DATE MEASURED: 8/4/2016

PROJECT: Navajo Gallup Water Supply Project
COORDINATES: N 1,884,604.2 E 2,464,255.7 N.M. State Plane
TOTAL DEPTH: 35.0
DEPTH TO BEDROCK: 15.3

STATE: New Mexico
GROUND ELEVATION: 5865.5 ft. NAD-83
ANGLE FROM HORIZONTAL: -90
HOLE LOGGED BY: P. Gardner
REVIEWED BY: J. Gilbert

NOTES

All measurements are from ground level and are the same as those used by drillers.

All measurements are reported in feet except where noted.

DRILLED BY:
Great Plains Drill Crew
DRILLER: Sean Rafferty
HELPER: Bob Sammons

PURPOSE:
Preconstruction soil and bedrock foundation investigations.

DRILL EQUIPMENT:
CME Model 85 truck mounted rotary drill rig.

DRILL METHOD:
0.0 to 15.0: 4.25 inch HSA with pilot bit.
15.0 to 31.8: 4.25 inch HSA and dry core system with SPT and California Sampler.
31.8 to 35.0: 4.25 inch HSA with pilot bit.

CASING RECORD:
None used

DRILLING MEDIUM:
0.0 to 35.0: None

DRILLING NOTES:
0.0 to 15.0: Difficult with pilot bit, easy at 12.8.
15.0 to 31.8: HSA with SPT and Califonia Sampler to refusal.
31.8 to 35.0: HSA with pilot bit, very difficult and slow. No recovery.

HOLE COMPLETION:
Backfilled with bentonite and cuttings.

SAMPLING:
15.0 to 16.5: SPT
19.0 to 20.0: California Sample
24.0 to 25.5: SPT
29.0 to 30.0: California Sample

DEPTH	GEOLOGIC SYMBOL	% CORE RECOVERY	% RQD	HARDNESS	WEATHERING	% FINES	% SAND	% GRAVEL	LIQUID LIMIT	PLASTICITY INDEX	MOISTURE CONTENT	LABORATORY CLASSIFICATION	BLOWS / 0.5 FT	VISUAL CLASSIFICATION
0–15	Qpd													Cobbles and Boulders
15														5850.2
15–20	Kmf	83				96.3	3.7	0.0	40.9	26.1	8.7	CL	11/31/50	
20		86		7	7								23/29	CLSTNE
25		100				99.0	1.0	0.0	73.0	49.9	16.2	CH	9/16/31	
30		53											31/50	
														5833.7
35		NR		3	3									SS
														5830.5

BOTTOM OF HOLE

CLASSIFICATION AND PHYSICAL CONDITION

0.0 to 15.3 ft QUATERNARY PEDIMENT DEPOSIT (Qpd)

0.0 to 12.8 ft COBBLES AND BOULDERS WITH SILTY SAND: Visual classification from test pit 175 feet to the northeast of drill hole with about 60% 3 to 5 inch hard, subrounded to subangular cobbles; about 20% 5 to 12 inch hard, subangular to subrounded cobbles; about 15% hard, subrounded boulders; remainder minus 3 inch; maximum size, 900mm. Bottom of interval determined by drill action.

MINUS 3 inch FRACTION (BY MASS): About 80% fine sand; about 20% nonplastic fines with rapid dilatancy and no dry strength; no reaction with HCl.

0.0 to 15.0 ft Pilot Bit: Recovered cuttings as silt and sand with hard, subangular to angular gravel. Strong reaction with HCl

15.0 to 15.3 ft SILTY SAND WITH GRAVEL (SM)g: About 65% fine to coarse, hard sand; about 20% fine, hard, subrounded to angular gravel; about 15% nonplastic fines; maximum size, 20mm; light brown and dry; strong reaction with HCl.

15.3 to 35.0 ft CRETACEOUS MENEFEE FORMATION (Kmf)

15.3 to 31.8 ft CLAYSTONE: Gray to orange in color. Very soft (H7) and intensely weathered (W7). Carbonaceous, friable and easily scratched with thumbnail. CaCOx, gypsum and FeOx staining present. No reaction with HCl.

31.8 to 35.0 ft SANDSTONE: Gray in color and fine grained. Hard (H3) and difficult to scratch with pick. Slightly weathered (W3). Carbonaceous blebs present. No reaction with HCl.

STRATIGRAPHY:
0.0 to 15.3 ft QUATERNARY PEDIMENT DEPOSIT (Qpd)
15.3 to 35.0 ft CRETACEOUS MENEFEE FORMATION (Kmf)

COMMENTS:

HSA= hollow stem auger NA= not available ft= feet NE= not encountered NP= non plastic NR= no recovery HCl= hydrochloric acid FeOx= iron oxide CaCOx= calcium carbonate MnOx= manganese oxide SPT= standard penetration test HQ3= coring system SS= sandstone CLSTNE= claystone

The data for the center column and "classification and physical conditions" column are based on Bureau of Reclamation Geology Field Manual and Drawing Titled for designs and specification as follows "Drawing No. 40-D-6493 Standard Descriptions and Descriptive Criteria for rock. Drawing No. 40-D-6499 Standard Descriptors and Descriptive Criteria for Discontinuities.

GEOLOGIC LOG OF DRILL HOLE NO. DHSTR7-16-13

FEATURE: Pumping Plant 4
LOCATION: Surge Tank
BEGUN: 7/30/16 FINISHED: 7/31/16
DEPTH AND ELEVATION OF WATER LEVEL: NE
DATE MEASURED: 7/31/2016

PROJECT: Navajo Gallup Water Supply Project
COORDINATES: N 1,884,688.3 E 2,464,248.2 N.M. State Plane
TOTAL DEPTH: 35.0
DEPTH TO BEDROCK: 15.4

STATE: New Mexico
GROUND ELEVATION: 5867.2 ft. NAD-83
ANGLE FROM HORIZONTAL: -90
HOLE LOGGED BY: P. Gardner, C. Beyer
REVIEWED BY: J. Gilbert

NOTES

All measurements are from ground level and are the same as those used by drillers.

All measurements are reported in feet except where noted.

DRILLED BY:
Great Plains Drill Crew
DRILLER: Sean Rafferty
HELPER: Bob Sammons

PURPOSE:
Preconstruction soil and bedrock foundation investigations.

DRILL EQUIPMENT:
CME Model 85 truck mounted rotary drill rig.

DRILL METHOD:
0.0 to 15.0: 4.25 inch HSA with pilot bit.
15.0 to 35.0: 4.25 inch HSA dry core system with SPT and California Sampler.

CASING RECORD:
None used

DRILLING MEDIUM:
0.0 to 35.0: None

DRILLING NOTES:
0.0 to 15.0: HSA with pilot bit, very slow. Easy at 12.0.
15.0 to 35.0: HSA and sampling.

HOLE COMPLETION:
Backfilled with bentonite and cuttings.

SAMPLING:
15.0 to 16.5: SPT (15.4 to 16.5 sent to lab)
20.0 to 21.0: California Sample
25.0 to 26.5: SPT
30.0 to 31.0: California Sample
33.5 to 35.0: SPT

DEPTH	GEOLOGIC SYMBOL	% CORE RECOVERY	% RQD	HARDNESS	WEATHERING	% FINES	% SAND	% GRAVEL	LIQUID LIMIT	PLASTICITY INDEX	MOISTURE CONTENT	LABORATORY CLASSIFICATION	BLOWS / 0.5 FT	VISUAL CLASSIFICATION
5	Qpd													Cobbles and Boulders
10														
15														5851.8
	Kmf	40		6	8	93.2	6.8	0.0	44.2	27.1	10.3	CL	18/27/31	CLSTNE
20		40											15/30	
25		94				98.9	1.1	0.0	68.8	50.3	18.4	CH	13/19/25	
30		80											44/50	5834.0
35		80		5	4	99.3	0.7	0.0	56.5	38.2	13.1	CH	32/50/NA	SHALE 5832.2

BOTTOM OF HOLE

CLASSIFICATION AND PHYSICAL CONDITION

0.0 to 15.4 ft QUATERNARY PEDIMENT DEPOSIT (Qpd)

0.0 to 12.0 ft COBBLES AND BOULDERS WITH SILTY SAND: Visual classification from test pit 20 feet to the northeast of drill hole with about 60% 3 to 5 inch hard, subrounded to subangular cobbles; about 20% 5 to 12 inch hard, subangular to subrounded cobbles; about 15% hard, subrounded boulders; remainder minus 3 inch; maximum size, 900 mm. Bottom of interval determined by drill action.

MINUS 3 inch FRACTION (BY MASS): About 80% fine sand; about 20% nonplastic fines with rapid dilatancy and no dry strength; no reaction with HCl.

0.0 to 15.0 ft Pilot Bit: Recovered cuttings as silt and sand with hard, subangular to angular gravel. Strong reaction with HCl

15.0 to 15.4 ft POORLY GRADED SAND (SP-SM): About 90% fine to coarse, hard sand; about 10% nonplastic fines; trace of gravel; maximum size, 50 mm; strong reaction with HCl.

15.4 to 35.0 ft CRETACEOUS MENEFEE FORMATION (Kmf)

15.4 to 33.2 ft CLAYSTONE: Brownish gray, dark gray and tan to orange in color. Soft (H6) and very intensely weathered (W8). Carbon fragments, CaCOx and FeOx staining present. Joint at 29.3ft.

JOINT MEASUREMENTS:

DEPTH	INCL	R	T	HL	INFILLING
29.3	80	5	1	6	FeOx

33.2 to 35.0 ft SHALE: Dark gray in color. Fissile, friable, slightly to moderately weathered (W4) and moderately soft (H5). Laminated to thinly bedded with FeOx staining and CaCOx present. No reaction with HCl.

STRATIGRAPHY:
0.0 to 15.4 ft QUATERNARY PEDIMENT DEPOSIT (Qpd)
15.4 to 35.0 ft CRETACEOUS MENEFEE FORMATION (Kmf)

COMMENTS:

HSA= hollow stem auger NA= not available ft= feet NE= not encountered NP= non plastic NR= no recovery HCl= hydrochloric acid FeOx= iron oxide CaCOx= calcium carbonate MnOx= manganese oxide SPT= standard penetration test HQ3= coring system SS= sandstone CLSTNE= claystone

The data for the center column and "classification and physical conditions" column are based on Bureau of Reclamation Geology Field Manual and Drawing Titled for designs and specification as follows "Drawing No. 40-D-6493 Standard Descriptions and Descriptive Criteria for rock. Drawing No. 40-D-6499 Standard Descriptors and Descriptive Criteria for Discontinuities.

GEOLOGIC LOG OF DRILL HOLE NO. DHSTR7-16-14

FEATURE: Pumping Plant 4
LOCATION: Pumping Plant
BEGUN: 7/29/16 FINISHED: 7/29/16
DEPTH AND ELEVATION OF WATER LEVEL: NE
DATE MEASURED: 7/29/2016

PROJECT: Navajo Gallup Water Supply Project
COORDINATES: N 1,884,790.3 E 2,464,246.4 N.M. State Plane
TOTAL DEPTH: 35.0
DEPTH TO BEDROCK: 33.6

STATE: New Mexico
GROUND ELEVATION: 5867.8 ft. NAD-83
ANGLE FROM HORIZONTAL: -90
HOLE LOGGED BY: P. Gardner
REVIEWED BY: J. Gilbert

NOTES

All measurements are from ground level and are the same as those used by drillers.

All measurements are reported in feet except where noted.

DRILLED BY:
Great Plains Drill Crew
DRILLER: Sean Rafferty
HELPER: Rueben Perez
HELPER: Bob Sammons

PURPOSE:
Preconstruction soil and bedrock foundation investigations.

DRILL EQUIPMENT:
CME Model 85 truck mounted rotary drill rig.

DRILL METHOD:
0.0 to 17.5: 4.25 inch HSA with pilot bit.
17.5 to 35.0: 4.25 inch HSA dry core system with SPT and California Sampler

CASING RECORD:
None used

DRILLING MEDIUM:
0.0 to 35.0: None

DRILLING NOTES:
0.0 to 17.5: Difficult to 12.0 and easy through 13.5. Difficult to 17.5 and lost pilot bit teeth.
17.5 to 35.0: HSA dry core, SPT and California sampling

HOLE COMPLETION:
Backfilled with bentonite and cuttings.

SAMPLING:
19.0 to 20.5: SPT
24.0 to 25.0: California Sample (discarded)
29.0 to 30.5: SPT (no recovery)
34.0 to 35.0: California Sample

DEPTH	GEOLOGIC SYMBOL	% CORE RECOVERY	% RQD	HARDNESS	WEATHERING	LABORATORY DATA: % FINES	% SAND	% GRAVEL	LIQUID LIMIT	PLASTICITY INDEX	MOISTURE CONTENT	LABORATORY CLASSIFICATION	BLOWS / 0.5 FT	VISUAL CLASSIFICATION
5	Qpd	NR												Cobbles and Boulders
10														
15														
		80												5850.3
20		20				24.2	54.5	21.3	NA	NP	2.8	(SM)g	21/16/15	(SP-SM)g 5847.3
25		NR											22/30	
30		8				-	-	-	-	-	-	NR	24/48/42	5834.2
35	Kmf	NA		6	8								17/27	CLSTNE 5832.8

BOTTOM OF HOLE

CLASSIFICATION AND PHYSICAL CONDITION

0.0 to 33.6 ft QUATERNARY PEDIMENT DEPOSIT (Qpd)

0.0 to 17.5 ft COBBLES AND BOULDERS WITH SILTY GRAVEL AND SAND: Visual classification from test pit 50 feet to the south of drill hole with about 60% 3 to 5 inch hard, subrounded to subangular cobbles; about 20% 5 to 12 inch hard, subangular to subrounded cobbles; about 15% hard, subrounded boulders; remainder minus 3 inch; maximum size, 1000mm. Bottom of interval determined by drill action.

MINUS 3 inch FRACTION (BY MASS): About 50% hard, subrounded gravel; about 30% fine to medium, subrounded sand; about 20% nonplastic fines; dry and tan in color; no reaction with HCl.

0.0 to 17.5 ft Pilot Bit: Large boulder at the surface. Recovered cuttings as silt and sand with hard, subangular to angular gravel. Strong reaction with HCl

17.5 to 20.5 ft POORLY GRADED SAND WITH SILT AND GRAVEL (SP-SM)g: About 70% fine to coarse, hard sand; about 20% fine, hard, subangular to angular gravel; about 10% nonplastic fines; light brown and dry; strong reaction with HCl.

20.5 to 33.6 ft Poor Recovery: Materials recovered were approx. 55% fine to coarse, hard, subangular to angular gravel; approx. 30% fine to coarse, hard sand; approx. 15% nonplastic fines; maximum size, 75mm; light brown and dry; strong reaction with HCl.

33.6 to 35.0 ft CRETACEOUS MENEFEE FORMATION (Kmf)

33.6 to 35.0 ft CLAYSTONE: Brownish gray and orange in color. Soft (H6) and very intensely weathered (W8). FeOx staining present.

STRATIGRAPHY:
0.0 to 33.6 ft QUATERNARY PEDIMENT DEPOSIT (Qpd)
33.6 to 35.0 ft CRETACEOUS MENEFEE FORMATION (Kmf)

COMMENTS:

HSA= hollow stem auger NA= not available ft= feet NE= not encountered NP= non plastic NR= no recovery HCl= hydrochloric acid FeOx= iron oxide CaCOx= calcium carbonate MnOx= manganese oxide SPT= standard penetration test HQ3= coring system SS= sandstone CLSTNE= claystone

The data for the center column and "classification and physical conditions" column are based on Bureau of Reclamation Geology Field Manual and Drawing Titled for designs and specification as follows "Drawing No. 40-D-6493 Standard Descriptions and Descriptive Criteria for rock. Drawing No. 40-D-6499 Standard Descriptors and Descriptive Criteria for Discontinuities.

GEOLOGIC LOG OF DRILL HOLE NO. DHSTR7-16-15

FEATURE: Pumping Plant 4
LOCATION: Pumping Plant
BEGUN: 8/2/16 FINISHED: 8/3/16
DEPTH AND ELEVATION OF WATER LEVEL: NE
DATE MEASURED: 8/3/2016

PROJECT: Navajo Gallup Water Supply Project
COORDINATES: N 1,884,855.2 E 2,464,265.8 N.M. State Plane
TOTAL DEPTH: 34.0
DEPTH TO BEDROCK: 31.5

STATE: New Mexico
GROUND ELEVATION: 5867.3 ft. NAD-83
ANGLE FROM HORIZONTAL: -90
HOLE LOGGED BY: P. Gardner
REVIEWED BY: J. Gilbert

NOTES

All measurements are from ground level and are the same as those used by drillers.

All measurements are reported in feet except where noted.

DRILLED BY:
Great Plains Drill Crew
DRILLER: Sean Rafferty
HELPER: Bob Sammons

PURPOSE:
Preconstruction soil and bedrock foundation investigations.

DRILL EQUIPMENT:
CME Model 85 truck mounted rotary drill rig.

DRILL METHOD:
0.0 to 20.0: 4.25 inch HSA with pilot bit
20.0 to 34.0: 4.25 inch HSA and dry core system.

CASING RECORD:
None used

DRILLING MEDIUM:
0.0 to 34.0: None

DRILLING NOTES:
0.0 to 20.0: Difficult with pilot bit.
20.0 to 34.0: Poor recovery.

HOLE COMPLETION:
Backfilled with bentonite and cuttings.

SAMPLES:
No sampling performed.

DEPTH	GEOLOGIC SYMBOL	% CORE RECOVERY	% RQD	HARDNESS	WEATHERING	LABORATORY DATA: % FINES	% SAND	% GRAVEL	LIQUID LIMIT	PLASTICITY INDEX	MOISTURE CONTENT	LABORATORY CLASSIFICATION	BLOWS / 0.5 FT	VISUAL CLASSIFICATION
5														
10														Cobbles and Boulders
15	Qpd													
20		100												5847.3
		53												(SM)g
														5843.3
25		2												
30		4												5835.8
	Kmf			6	8									CLSTNE
														5833.3

BOTTOM OF HOLE

CLASSIFICATION AND PHYSICAL CONDITION

0.0 to 31.5 ft QUATERNARY PEDIMENT DEPOSIT (Qpd)

0.0 to 16.8 ft COBBLES AND BOULDERS WITH SILTY GRAVEL AND SAND: Visual classification from test pit 150 feet to the south of drill hole with about 60% 3 to 5 inch hard, subrounded to subangular cobbles; about 20% 5 to 12 inch hard, subangular to subrounded cobbles; about 15% hard, subrounded boulders; remainder minus 3 inch; maximum size, 1000mm. Bottom of interval determined by drill action.

MINUS 3 inch FRACTION (BY MASS): About 50% hard, subrounded gravel; about 30% fine to medium, subrounded sand; about 20% nonplastic fines; no reaction with HCl.

0.0 to 20.0 ft Pilot Bit: Recovered cuttings as silt and sand with hard, subangular to angular gravel. Strong reaction with HCl

20.0 to 24.0 ft SILTY SAND WITH GRAVEL (SM)g: About 65% fine to coarse, hard sand; about 15% fine, hard, subangular to angular gravel; about 20% nonplastic fines; light brown and dry; strong reaction with HCl.

24.0 to 31.5 ft Poor Recovery: Materials recovered were approx. 65% fine to coarse, hard sand; approx. 25% fine to coarse, hard, subangular to angular gravel; approx. 10% nonplastic fines; maximum size, 75mm; light brown and dry; strong reaction with HCl.

31.5 to 34.0 ft CRETACEOUS MENEFEE FORMATION (Kmf)

31.5 to 34.0 ft CLAYSTONE: Brownish gray and tan to orange in color. Soft (H6) and very intensely weathered (W8). FeOx staining present.

STRATIGRAPHY:
0.0 to 31.5 ft QUATERNARY PEDIMENT DEPOSIT (Qpd)
31.5 to 34.0 ft CRETACEOUS MENEFEE FORMATION (Kmf)

COMMENTS:

HSA= hollow stem auger NA= not available ft= feet NE= not encountered NP= non plastic NR= no recovery HCl= hydrochloric acid FeOx= iron oxide CaCOx= calcium carbonate MnOx= manganese oxide SPT= standard penetration test HQ3= coring system SS= sandstone CLSTNE= claystone

The data for the center column and "classification and physical conditions" column are based on Bureau of Reclamation Geology Field Manual and Drawing Titled for designs and specification as follows "Drawing No. 40-D-6493 Standard Descriptions and Descriptive Criteria for rock. Drawing No. 40-D-6499 Standard Descriptors and Descriptive Criteria for Discontinuities.

GEOLOGIC LOG OF DRILL HOLE NO. DHSTR7-16-16

FEATURE: Pumping Plant 4
LOCATION: Pumping Plant
BEGUN: 8/1/16 FINISHED: 8/1/16
DEPTH AND ELEVATION OF WATER LEVEL: NE
DATE MEASURED: 8/1/2016

PROJECT: Navajo Gallup Water Supply Project
COORDINATES: N 1,884,854.7 E 2,464,222.3 N.M. State Plane
TOTAL DEPTH: 29.0
DEPTH TO BEDROCK: 26.3

STATE: New Mexico
GROUND ELEVATION: 5867.9 ft. NAD-83
ANGLE FROM HORIZONTAL: -90
HOLE LOGGED BY: P. Gardner
REVIEWED BY: J. Gilbert

NOTES

All measurements are from ground level and are the same as those used by drillers.

All measurements are reported in feet except where noted.

DRILLED BY:
Great Plains Drill Crew
DRILLER: Sean Rafferty
HELPER: Bob Sammons

PURPOSE:
Preconstruction soil and bedrock foundation investigations.

DRILL EQUIPMENT:
CME Model 85 truck mounted rotary drill rig.

DRILL METHOD:
0.0 to 15.0: 4.25 inch HSA with pilot bit.
15.0 to 29.0: 4.25 inch HSA and dry core system.

CASING RECORD:
None used

DRILLING MEDIUM:
0.0 to 29.0: None

DRILLING NOTES:
0.0 to 14.0: Difficult with pilot bit
14.0 to 29.0: Gravels through 21.0 to 22.5 and at 25.0.

HOLE COMPLETION:
Backfilled with bentonite and cuttings.

SAMPLING:
No sampling performed.

DEPTH	GEOLOGIC SYMBOL	% CORE RECOVERY	% RQD	HARDNESS	WEATHERING	% FINES	% SAND	% GRAVEL	LIQUID LIMIT	PLASTICITY INDEX	MOISTURE CONTENT	LABORATORY CLASSIFICATION	BLOWS / 0.5 FT	VISUAL CLASSIFICATION
	Qpd													Cobbles and Boulders
		NR												
		52												(SP-SM)g
		100												
	Kmf			6	8									CLSTNE

5853.9
5848.9
5841.6
5838.9

BOTTOM OF HOLE

CLASSIFICATION AND PHYSICAL CONDITION

0.0 to 26.3 ft QUATERNARY PEDIMENT DEPOSIT (Qpd)

0.0 to 14.0 ft COBBLES AND BOULDERS WITH SILTY GRAVEL AND SAND: Visual classification from test pit 150 feet to the south of drill hole with about 60% 3 to 5 inch hard, subrounded to subangular cobbles; about 20% 5 to 12 inch hard, subangular to subrounded cobbles; about 15% hard, subrounded boulders; remainder minus 3 inch; maximum size, 1000mm. Bottom of interval determined by drill action.

MINUS 3 inch FRACTION (BY MASS): About 50% hard, subrounded gravel; about 30% fine to medium, subrounded sand; about 20% nonplastic fines; no reaction with HCl.

0.0 to 15.0 ft Pilot Bit: Recovered cuttings as silt and sand with hard, subangular to angular gravel. Strong reaction with HCl.

15.0 to 19.0 ft No Recovery: Recovered cuttings as silt and sand with hard, subangular to angular gravel. Strong reaction with HCl.

19.0 to 26.3 ft POORLY GRADED SAND WITH SILT AND GRAVEL (SP-SM)g: About 70% fine to coarse, hard sand; about 20% fine, hard, subangular to angular gravel; about 10% nonplastic fines; light to dark brown, dry, FeOx staining present; strong reaction with HCl.

26.3 to 29.0 ft CRETACEOUS MENEFEE FORMATION (Kmf)

26.3 to 29.0 ft CLAYSTONE: Brownish gray and tan in color. Soft (H6) and very intensely weathered (W8). FeOx staining present.

STRATIGRAPHY:
0.0 to 26.3 ft QUATERNARY PEDIMENT DEPOSIT (Qpd)
26.3 to 29.0 ft CRETACEOUS MENEFEE FORMATION (Kmf)

COMMENTS:

HSA= hollow stem auger NA= not available ft= feet NE= not encountered NP= non plastic NR= no recovery HCl= hydrochloric acid FeOx= iron oxide CaCOx= calcium carbonate MnOx= manganese oxide SPT= standard penetration test HQ3= coring system SS= sandstone CLSTNE= claystone

The data for the center column and "classification and physical conditions" column are based on Bureau of Reclamation Geology Field Manual and Drawing Titled for designs and specification as follows "Drawing No. 40-D-6493 Standard Descriptions and Descriptive Criteria for rock. Drawing No. 40-D-6499 Standard Descriptors and Descriptive Criteria for Discontinuities.

GEOLOGIC LOG OF DRILL HOLE NO. DHSTR7-16-17

FEATURE: Pumping Plant 4
LOCATION: Pumping Plant
BEGUN: 7/31/16 FINISHED: 7/31/16
DEPTH AND ELEVATION OF WATER LEVEL: NE
DATE MEASURED: 7/31/2016

PROJECT: Navajo Gallup Water Supply Project
COORDINATES: N 1,884,725.7 E 2,464,263.0 N.M. State Plane
TOTAL DEPTH: 29.0
DEPTH TO BEDROCK: 27.0

STATE: New Mexico
GROUND ELEVATION: 5867.2 ft. NAD-83
ANGLE FROM HORIZONTAL: -90
HOLE LOGGED BY: P. Gardner
REVIEWED BY: J. Gilbert

NOTES

All measurements are from ground level and are the same as those used by drillers.

All measurements are reported in feet except where noted.

DRILLED BY:
Great Plains Drill Crew
DRILLER: Sean Rafferty
HELPER: Rueben Perez
HELPER: Bob Sammons

PURPOSE:
Preconstruction soil and bedrock foundation investigations.

DRILL EQUIPMENT:
CME Model 85 truck mounted rotary drill rig.

DRILL METHOD:
0.0 to 15.0: 4.25 inch HSA with pilot bit.
0.0 to 29.0: 4.25 inch HSA and dry core system.

CASING RECORD:
None used

DRILLING MEDIUM:
0.0 to 29.0: None

DRILLING NOTES:
0.0 to 13.5: Difficult with pilot bit
13.5 to 29.0: Poor recovery

HOLE COMPLETION:
Backfilled with bentonite and cuttings.

SAMPLING:
No sampling performed.

DEPTH	GEOLOGIC SYMBOL	% CORE RECOVERY	% RQD	HARDNESS	WEATHERING	% FINES	% SAND	% GRAVEL	LIQUID LIMIT	PLASTICITY INDEX	MOISTURE CONTENT	LABORATORY CLASSIFICATION	BLOWS / 0.5 FT	VISUAL CLASSIFICATION
5														Cobbles and Boulders
10														5855.7
	Qpd													
15		10												
20		4												5843.4
25		22												5840.2
	Kmf			6	8									CLSTNE
														5838.2

BOTTOM OF HOLE

CLASSIFICATION AND PHYSICAL CONDITION

0.0 to 27.0 ft QUATERNARY PEDIMENT DEPOSIT (Qpd)

0.0 to 11.5 ft COBBLES AND BOULDERS WITH SILTY SAND: Visual classification from test pit 25 feet to the south of drill hole with about 60% 3 to 5 inch hard, subrounded to subangular cobbles; about 20% 5 to 12 inch hard, subangular to subrounded cobbles; about 15% hard, subrounded boulders; remainder minus 3 inch; maximum size, 900mm. Bottom of interval determined by drill action.

MINUS 3 inch FRACTION (BY MASS): About 80% fine sand; about 20% nonplastic fines with rapid dilatancy and no dry strength; no reaction with HCl.

0.0 to 15.0 ft Pilot Bit: Recovered cuttings as silt and sand with hard, subangular to angular gravel. Strong reaction with HCl

15.0 to 23.8 ft Poor Recovery: Materials recovered were approx. 70% fine to coarse, hard sand; approx. 20% fine, hard, subangular to angular gravel; approx. 10% nonplastic fines; light brown and dry; strong reaction with HCl.

23.8 to 27.0 ft Poor Recovery: Materials recovered were approx. 60% fines with low plasticity; approx. 30% fine to coarse, hard sand; approx. 10% fine to coarse, hard, subangular to angular gravel; dark brown to gray and dry; no reaction with HCl.

27.0 to 29.0 ft CRETACEOUS MENEFEE FORMATION (Kmf)

27.0 to 29.0 ft CLAYSTONE: Brownish gray and tan to orange in color. Soft (H6) and very intensely weathered (W8). FeOx staining present.

STRATIGRAPHY:
0.0 to 27.0 ft QUATERNARY PEDIMENT DEPOSIT (Qpd)
27.0 to 29.0 ft CRETACEOUS MENEFEE FORMATION (Kmf)

COMMENTS:

HSA= hollow stem auger NA= not available ft= feet NE= not encountered NP= non plastic NR= no recovery HCl= hydrochloric acid FeOx= iron oxide CaCOx= calcium carbonate MnOx= manganese oxide SPT= standard penetration test HQ3= coring system SS= sandstone CLSTNE= claystone

The data for the center column and "classification and physical conditions" column are based on Bureau of Reclamation Geology Field Manual and Drawing Titled for designs and specification as follows "Drawing No. 40-D-6493 Standard Descriptions and Descriptive Criteria for rock. Drawing No. 40-D-6499 Standard Descriptors and Descriptive Criteria for Discontinuities.

GEOLOGIC LOG OF DRILL HOLE NO. DHSTR7-16-18

FEATURE: Pumping Plant 4
LOCATION: Pumping Plant
BEGUN: 8/3/16 FINISHED: 8/3/16
DEPTH AND ELEVATION OF WATER LEVEL: NE
DATE MEASURED: 8/3/2016

PROJECT: Navajo Gallup Water Supply Project
COORDINATES: N 1,884,722.1 E 2,464,226.3 N.M. State Plane
TOTAL DEPTH: 29.0
DEPTH TO BEDROCK: 23.8

STATE: New Mexico
GROUND ELEVATION: 5867.5 ft. NAD-83
ANGLE FROM HORIZONTAL: -90
HOLE LOGGED BY: P. Gardner
REVIEWED BY: J. Gilbert

NOTES

All measurements are from ground level and are the same as those used by drillers.

All measurements are reported in feet except where noted.

DRILLED BY:
Great Plains Drill Crew
DRILLER: Sean Rafferty
HELPER: Bob Sammons

PURPOSE:
Preconstruction soil and bedrock foundation investigations.

DRILL EQUIPMENT:
CME Model 85 truck mounted rotary drill rig.

DRILL METHOD:
0.0 to 20.0: 4.25 inch HSA with pilot bit.
20.0 to 29.0: 4.25 inch HSA and dry core system.

CASING RECORD:
None used

DRILLING MEDIUM:
0.0 to 29.0: None

DRILLING NOTES:
0.0 to 20.0: Difficult with pilot bit, easy at 16.0.
20.0 to 29.0: Poor recovery.

HOLE COMPLETION:
Backfilled with bentonite and cuttings.

SAMPLING:
No sampling performed.

DEPTH	GEOLOGIC SYMBOL	% CORE RECOVERY	% RQD	HARDNESS	WEATHERING	% FINES	% SAND	% GRAVEL	LIQUID LIMIT	PLASTICITY INDEX	MOISTURE CONTENT	LABORATORY CLASSIFICATION	BLOWS / 0.5 FT	VISUAL CLASSIFICATION
5														Cobbles and Boulders
10														
	Qpd													
15														5851.5
20		8												5843.7
25	Kmf	22		6	8									CLSTNE
														5838.5

BOTTOM OF HOLE

CLASSIFICATION AND PHYSICAL CONDITION

0.0 to 23.8 ft QUATERNARY PEDIMENT DEPOSIT (Qpd)

0.0 to 16.0 ft COBBLES AND BOULDERS WITH SILTY GRAVEL AND SAND: Visual classification from test pit 75 feet to the north east of drill hole with about 60% 3 to 5 inch hard, subrounded to subangular cobbles; about 20% 5 to 12 inch hard, subangular to subrounded cobbles; about 15% hard, subrounded boulders; remainder minus 3 inch; maximum size, 1000mm. Bottom of interval determined by drill action.

MINUS 3 inch FRACTION (BY MASS): About 50% hard, subrounded gravel; about 30% fine to medium, subrounded sand; about 20% nonplastic fines; no reaction with HCl.

0.0 to 20.0 ft Pilot Bit: Recovered cuttings as silt and sand with hard, subangular to angular gravel. Strong reaction with HCl.

20.0 to 23.8 ft Poor Recovery: Materials recovered were approx. 75% fine to coarse, hard sand; approx. 20% nonplastic fines; approx. 5% fine, hard, subangular to angular gravel; maximum size, 20mm; light brown and dry; strong reaction with HCl.

23.8 to 29.0 ft CRETACEOUS MENEFEE FORMATION (Kmf)

23.8 to 29.0 ft CLAYSTONE: Gray and orange in color. Soft (H6) and very intensely weathered (W8). FeOx staining and CaCOx with gypsum present. Some carbonaceous fragments present.

STRATIGRAPHY:
0.0 to 23.8 ft QUATERNARY PEDIMENT DEPOSIT (Qpd)
23.8 to 29.0 ft CRETACEOUS MENEFEE FORMATION (Kmf)

COMMENTS:

HSA= hollow stem auger NA= not available ft= feet NE= not encountered NP= non plastic NR= no recovery HCl= hydrochloric acid FeOx= iron oxide CaCOx= calcium carbonate MnOx= manganese oxide SPT= standard penetration test HQ3= coring system SS= sandstone CLSTNE= claystone

The data for the center column and "classification and physical conditions" column are based on Bureau of Reclamation Geology Field Manual and Drawing Titled for designs and specification as follows "Drawing No. 40-D-6493 Standard Descriptions and Descriptive Criteria for rock. Drawing No. 40-D-6499 Standard Descriptors and Descriptive Criteria for Discontinuities.

GEOLOGIC LOG OF DRILL HOLE NO. DHPP4-16-6

FEATURE: Pumping Plant 4
LOCATION: Pipe investigation
BEGUN: 4/8/16 FINISHED: 4/8/16
DEPTH AND ELEVATION OF WATER LEVEL: NE
DATE MEASURED: 4/8/2016

PROJECT: Navajo Gallup Water Supply Project
COORDINATES: N 1,884,409.8 E 2,464,146.6 N.M. State Plane
TOTAL DEPTH: 30.0
DEPTH TO BEDROCK: 3.0

STATE: New Mexico
GROUND ELEVATION: 5816.8 ft. NAD-83
ANGLE FROM HORIZONTAL: -90
HOLE LOGGED BY: C. Beyer
REVIEWED BY: J. Gilbert

NOTES

ALL MEASUREMENTS ARE FROM GROUND LEVEL AND ARE THE SAME AS THOSE USED BY DRILLER.

ALL MEASUREMENTS ARE REPORTED IN FEET EXCEPT WHERE NOTED.

DRILLED BY:
UPPER COLORADO DRILL CREW
DRILLER: KYLE KILLEBREW
HELPER: JOE PROCTOR
HELPER: RENATO MATHESON

PURPOSE:
PRECONSTRUCTION SOIL AND BEDROCK FOUNDATION INVESTIGATIONS.

DRILL EQUIPMENT:
CME MODEL 85 TRUCK MOUNTED ROTARY DRILL RIG.

DRILL METHOD:
0.0 TO 4.0 FT: 4 1/4" SSA WITH PILOT BIT
4.0 TO 6.5: 4 1/4" HSA AND DRY CORE SYSTEM WITH SPTS.
6.5 TO 21.0 FT: 4 1/4" HSA AND DRY CORE SYSTEM WITH CALIFORNIA SAMPLER.
21.0 TO 24.0 FT: 4 1/4" SSA WITH PILOT BIT.
24.0 TO 30.0 FT: 4 1/4" HSA AND DRY CORE SYSTEM WITH CALIFORNIA SAMPLER.

CASING RECORD:
NONE USED

DRILLING MEDIUM:
0.0 TO 30.0 FT: NONE

DRILLING NOTES: HOLE LOCATED AT THE SOUTH TOE OF THE HILL BELLOW PROPOSED TANK SITE/PUMPING PLANT. OUTSIDE/BELOW PEDIMENT DEPOSIT.

HOLE COMPLETION:
BACKFILLED WITH BENTONITE.

SAMPLING:
4.0 TO 5.5 FT: SPT
6.5 TO 7.5 FT: CALIFORNIA SAMPLE
9.0 TO 10.0 FT: CALIFORNIA SAMPLE
14.0 TO 15.0 FT: CALIFORNIA SAMPLE
19.0 TO 20.0 FT: CALIFORNIA SAMPLE (NO RECOVERY)
21.0 TO 22.0 FT: CALIFORNIA SAMPLE (NO RECOVERY)
24.0 TO 25.0 FT: CALIFORNIA SAMPLE

DEPTH	GEOLOGIC SYMBOL	% CORE RECOVERY	% RQD	HARDNESS	WEATHERING	% FINES	% SAND	% GRAVEL	LIQUID LIMIT	PLASTICITY INDEX	MOISTURE CONTENT	LABORATORY CLASSIFICATION	BLOWS / 0.5 FT	VISUAL CLASSIFICATION
	Qal	NR												SC
														5813.8
5		52			8	89.6	10.4	0.0	36.1	16.8	8.3	Cl22	46/REFUSAL	
		52											39/REFUSAL	SHALE
														5807.3
10		100		7									21/35	
		60												
15		98			7								27/REFUSAL	CLSTNE
	Kmf													
														5797.6
20		100		4	4								REFUSAL	
				3-4									REFUSAL	
		NR												
25				6	5								REFUSAL	SS
		100												
30		100												5786.8

BOTTOM OF HOLE

CLASSIFICATION AND PHYSICAL CONDITION

0.0 TO 3.0 FT QUATERNARY ALLUVIUM (Qal)

0.0 TO 3.0 FT CLAYEY SAND (SC): ABOUT 80% PREDOMINATELY FINE SAND; ABOUT 20% FINES WITH LOW PLASTICITY, LOW DRY STRENGTH AND LOW TOUGHNESS; TRACE MEDIUM TO COARSE SAND; TRACE SUBANGULAR, HARD, SANDSTONE, CHERT AND PETRIFIED WOOD GRAVEL; MAXIMUM SIZE 25mm; GRAY IN COLOR; DRY; WEAK REACTION WITH HCl.

3.0 TO 30.0 FT CRETACEOUS MENEFEE FORMATION (Kmf)

3.0 TO 9.5 FT SHALE: SLIGHTLY FISSILE, FRIABLE, VERY INTENSELY WEATHERED WEATHERED (W8) VERY SOFT (H7), CARBONACEOUS, LAMINATED TO THINLY BEDDED, COAL LAMINATIONS, BROWN TO BLACK IN COLOR, AND IRON OXIDE STAINING. SAMPLE CHEWED UP BY AUGER, NO REACTION WITH HCl.

9.5 TO 19.2 FT CLAYSTONE: VERY SOFT (H7), AND INTENSELY WEATHERED (W7), GREY IN COLOR, MOTTLED, THINLY TO MODERATELY BEDDED, SANDY, GYPSUM NODULES, AND IRON OXIDE STAINING.

19.2 TO 20.5 FT SANDSTONE: MODERATELY HARD (H4), SLIGHTLY TO MODERATELY WEATHERED (W4), RED, PURPLE AND ORANGE IN COLOR, IRON AND MANGANESE OXIDE STAINING, SANDY, CALCITE VEINS, STRONG REACTION WITH HCl.

20.5 TO 24.5 FT SANDSTONE: FINE GRAINED, BROWNISH ORANGE IN COLOR, MODERATELY HARD (H4) TO HARD (H3) MODERATELY BEDDED, ENCOUNTERED AUGER REFUSAL AT 21.0 FT. USED PILOT BIT FROM 21.0 TO 24.0 FT WITH NO SAMPLE RECOVERY.

24.5 TO 30.0 FT SANDSTONE: GRAY IN COLOR, SOFT (H6), MODERATELY WEATHERED (W5), FINE GRAINED, THINLY BEDDED, CARBONACEOUS FRAGMENTS AND GYPSUM VEINS.

END OF HOLE, TOTAL DEPTH= 30.0

STRATIGRAPHY:
0.0 - 3.0 FT QUATERNARY ALLUVIUM (Qal)
3.0 - 30.0 FT CRETACEOUS MENEFEE FORMATION (Kmf)

COMMENTS:

ALL ANGLES MEASURED FROM CORE AXIS AT ZERO DEGREES, UNLESS OTHERWISE NOTED.
THE DATA FOR THE CENTER COLUMN AND "CLASSIFICATION AND PHYSICAL CONDITIONS" COLUMN ARE BASED ON BUREAU OF RECLAMATION GEOLOGY FIELD MANUAL AND DRAWINGS TITLED FOR DESIGNS AND SPECIFICATIONS AS FOLLOWS- DRAWING NO. 40-D-6493. STANDARD DESCRIPTIONS AND DESCRIPTIVE CRITERIA FOR ROCK. DRAWING NO. 40-D-6499. STANDARD DESCRIPTORS AND DESCRIPTIVE CRITERIA FOR DISCONTINUITIES.

ABBREVIATIONS: WLNE= WATER LEVEL NOT ENCOUNTERED SS= SANDSTONE SLST= SILTSTONE CLSTNE= CLAYSTONE FeOx= IRON OXIDE MnOx= MANGANESE OXIDE

GEOLOGIC LOG OF DRILL HOLE NO. DHPP7-16-1

FEATURE: Pumping Plant 7
LOCATION: Pumping Plant
BEGUN: 4/6/16 FINISHED: 4/7/16
DEPTH AND ELEVATION OF WATER LEVEL: NE
DATE MEASURED: 4/7/2016

PROJECT: Navajo Gallup Water Supply Project
COORDINATES: N 1,729,194.4 E 2,454,357.6 83 State Plane
TOTAL DEPTH: 39.5
DEPTH TO BEDROCK: 5.4

STATE: New Mexico
GROUND ELEVATION: 6212.4 ft. NAD-83
ANGLE FROM HORIZONTAL: -90
HOLE LOGGED BY: P. Gardner
REVIEWED BY: J. Gilbert

NOTES

All measurements are from ground level and are the same as those used by drillers.

All measurements are reported in feet except where noted.

DRILLED BY: Upper Colorado Drill Crew
DRILLER: Kyle Killebrew
HELPER: Joe Proctor
HELPER: Renato Matheson

PURPOSE:
Preconstruction soil and bedrock foundation investigations.

DRILL EQUIPMENT:
CME Model 85 truck mounted rotary drill rig.

DRILL METHOD:
0.0 to 8.5: 4.25 inch HSA and dry core system with SPT.
8.5 to 11.3: 4.25 inch HSA and dry core system with California Sampler.
11.3 to 39.5: HQ3 wireline coring system with 5 foot split tube sampler and carbide surface set bit.

CASING RECORD:
None used

DRILLING MEDIUM:
0.0 to 11.3: None
11.3 to 39.5: Water

DRILLING NOTES:
0.0 to 3.5: Pilot bit.
3.5 to 11.3: Dry core, easy auger to refusal.
11.3 to 24.5: HQ3 Easy drilling.
24.5 to 29.5: HQ3 No recovery, easy drilling.
29.5 to 34.5: HQ3 Easy drilling, difficult to recover core.
34.5 to 39.5: HQ3 Easy drilling, difficult to recover core because of washed sandstone. Lost bit in hole at 39.5. Abandoned hole.

HOLE COMPLETION:
Backfilled with bentonite and auger cuttings.

SAMPLES:
Sampled following intervals for swell and laboratory testing.
3.5 to 5.0: SPT
8.5 to 9.5: California Sample

DEPTH	GEOLOGIC SYMBOL	% CORE RECOVERY	% RQD	HARDNESS	WEATHERING	LABORATORY DATA: % FINES	% SAND	% GRAVEL	LIQUID LIMIT	PLASTICITY INDEX	MOISTURE CONTENT	LABORATORY CLASSIFICATION	BLOWS / 0.5 FT	VISUAL CLASSIFICATION
	Qal													SC
						38.9	61.1	0.0	22.2	4.5	5.0	SC-SM	6/17/46	
5		84	NA											6207.0
				5	7									
													28/50	
10		97												
		66	44	3										
15														
		100	70											
20														
	Kmf	42	0											SS
25					4									
		NR	0	5										
30														
		94	0											
35														
		NR	0											
														6172.9

BOTTOM OF HOLE

CLASSIFICATION AND PHYSICAL CONDITION

0.0 to 5.4 ft QUATERNARY ALLUVIUM (Qal)

0.0 to 5.4 ft CLAYEY SAND (SC): About 70% fine sand; about 30% fines with low plasticity, low dry strength, low toughness and no dilatancy; maximum size, fine sand; strong reaction with HCl. Brown and dry.

5.4 to 39.5 ft CRETACEOUS MENEFEE FORMATION (Kmf)

5.4 to 11.3 ft SANDSTONE: Fine grained, tan to light brown and orange. Moderately soft (H5) and can be grooved with knife. Intensely weathered (W7) discolored and oxidation throughout. Friable, easily broken on bedding planes and FeOx and CaCOx in joints. No to weak reaction with HCl. Laminated to thinly bedded. Bedding planes near horizontal.

11.3 to 13.8 ft SANDSTONE: Fine grained, light to dark gray in color. Hard (H3) and difficult to scratch with knife. Moderately to slightly weathered (W4) with limited discoloration and preserved texture. Strong reaction with HCl. Laminated to thinly bedded. Bedding planes near horizontal. Highly fractured zone between 13.3 and 13.5 ft.

JOINT MEASUREMENTS:

DEPTH	INCL	R	O	T	HL	INFILLING
12.5	10°	5	0	0	1	FeOx

13.8 to 34.5 ft SANDSTONE: Fine grained, light to dark brown. Moderately soft (H5) and can be grooved with knife. Moderately to slightly weathered (W4) with limited discoloration and preserved texture. Easily broken on bedding planes and FeOx staining present. No to weak reaction with HCl. Laminated to moderately bedded. Bedding planes vary from 10° to near horizontal. No recovery between 24.5 and 29.5 ft.

34.5 to 39.5 ft SANDSTONE: No recovery. Core washed away with cuttings.

STRATIGRAPHY:

0.0 to 5.4 ft: QUATERNARY ALLUVIUM (Qal)
5.4 to 39.5 ft: CRETACEOUS MENEFEE FORMATION (Kmf)

COMMENTS:

HSA= hollow stem auger NA= not available ft= feet NE= not encountered NP= non plastic NR= no recovery HCl= hydrochloric acid FeOx= iron oxide CaCOx= calcium carbonate MnOx= manganese oxide SPT= standard penetration test HQ3= coring system SS= sandstone CLSTNE= claystone

The data for the center column and "classification and physical conditions" column are based on Bureau of Reclamation Geology Field Manual and Drawing Titled for designs and specification as follows "Drawing No. 40-D-6493 Standard Descriptions and Descriptive Criteria for rock. Drawing No. 40-D-6499 Standard Descriptors and Descriptive Criteria for Discontinuities.

GEOLOGIC LOG OF DRILL HOLE NO. DHPP7-16-2

FEATURE: Pumping Plant 7
LOCATION: Foundation Investigation
BEGUN: 7/19/16 FINISHED: 7/19/16
DEPTH AND ELEVATION OF WATER LEVEL: 29.8 ft. (6180.7)
DATE MEASURED: 7/19/2016

PROJECT: Navajo Gallup Water Supply Project
COORDINATES: N 1,729,464.4 E 2,454,630.5 83 State Plane
TOTAL DEPTH: 30.0
DEPTH TO BEDROCK: 8.8

STATE: New Mexico
GROUND ELEVATION: 6210.5 ft. NAD-83
ANGLE FROM HORIZONTAL: -90
HOLE LOGGED BY: C. Beyer
REVIEWED BY: J. Gilbert

NOTES

All measurements are from ground level and are the same as those used by drillers.

All measurements are reported in feet except where noted.

DRILLED BY: Great Plains Drill Crew
DRILLER: Sean Rafferty
HELPER: Rueben Perez
HELPER: Bob Sammons

PURPOSE:
Preconstruction soil and bedrock foundation investigations.

DRILL EQUIPMENT:
CME Model 85 truck mounted rotary drill rig.

DRILL METHOD:
0.0 to 30.0: 4.25 inch HSA and dry core system.

CASING RECORD:
None used.

DRILLING MEDIUM:
0.0 to 30.0: None

DRILLING NOTES:
Core chewed up by auger, recovered as thin wafers.

HOLE COMPLETION:
Backfilled with bentonite and cuttings.

SAMPLES:
Sampled following interval for laboratory testing.
4.0 to 5.5: SPT

DEPTH	GEOLOGIC SYMBOL	% CORE RECOVERY	% RQD	HARDNESS	WEATHERING	% FINES	% SAND	% GRAVEL	LIQUID LIMIT	PLASTICITY INDEX	MOISTURE CONTENT	LABORATORY CLASSIFICATION	BLOWS / 0.5 FT	VISUAL CLASSIFICATION
	Qal	42	NA											
5		26				28.8	71.2	0.0	24.0	6.2	5.1	SC-SM	10/13/12	SC
10	Kmf	100		7	8									
15		100												
20		100		6	6									SS
25		100												
30		100												

6201.7

6180.5

BOTTOM OF HOLE

CLASSIFICATION AND PHYSICAL CONDITION

0.0 to 8.8 ft QUATERNARY ALLUVIUM (Qal)

0.0 to 8.8 ft CLAYEY SAND (SC): About 75% fine sand; about 25% fines with medium plasticity, medium toughness, medium dry strength and slow dilatancy; maximum size, fine sand; strong reaction with HCl.

8.8 to 30.0 ft CRETACEOUS MENEFEE FORMATION (Kmf)

8.8 to 30.0 ft SANDSTONE: Fine grained, light to dark brown and orange, very soft (H7) to soft (H6), moderately to Intensely weathered (W6), thinly to moderately bedded, bedding planes near horizontal. Core separates along bedding planes, FeOx staining, weak reaction with HCl. Core becomes moist below 16.0 ft and wet from 29.5 to 30.0 ft. Groundwater measured at 29.8 ft before backfilling hole.

STRATIGRAPHY:

0.0 to 8.8 ft: QUATERNARY ALLUVIUM (Qal)
8.8 to 30.0 ft: CRETACEOUS MENEFEE FORMATION (Kmf)

COMMENTS:

HSA= hollow stem auger NA= not available ft= feet NE= not encountered NP= non plastic NR= no recovery HCl= hydrochloric acid FeOx= iron oxide CaCOx= calcium carbonate MnOx= manganese oxide SPT= standard penetration test HQ3= coring system SS= sandstone CLSTNE= claystone

The data for the center column and "classification and physical conditions" column are based on Bureau of Reclamation Geology Field Manual and Drawing Titled for designs and specification as follows "Drawing No. 40-D-6493 Standard Descriptions and Descriptive Criteria for rock. Drawing No. 40-D-6499 Standard Descriptors and Descriptive Criteria for Discontinuities.

GEOLOGIC LOG OF DRILL HOLE NO. DHPP7-16-3

FEATURE: Pumping Plant 7
LOCATION: Foundation Investigation
BEGUN: 7/15/16 FINISHED: 7/17/16
DEPTH AND ELEVATION OF WATER LEVEL: 30.7 ft. (6181.4)
DATE MEASURED: 7/18/2016

PROJECT: Navajo Gallup Water Supply Project
COORDINATES: N 1,729,213.0 E 2,454,486.3 83 State Plane
TOTAL DEPTH: 35.8
DEPTH TO BEDROCK: 4.5

STATE: New Mexico
GROUND ELEVATION: 6212.1 ft. NAD-83
ANGLE FROM HORIZONTAL: -90
HOLE LOGGED BY: P. Gardner C. Beyer
REVIEWED BY: J. Gilbert

NOTES

All measurements are from ground level and are the same as those used by drillers.

All measurements are reported in feet except where noted.

DRILLED BY: Great Plains Drill Crew
DRILLER: Sean Rafferty
HELPER: Rueben Perez
HELPER: Bob Sammons

PURPOSE:
Preconstruction soil and bedrock foundation investigations.

DRILL EQUIPMENT:
CME Model 85 truck mounted rotary drill rig.

DRILL METHOD:
0.0 to 18.0: 4.25 inch HSA and dry core system with SPT.
18.0 to 19.0: 4.25 inch HSA with Pilot Bit.
19.0 to 35.8: HQ3 wireline coring system with 5 foot split tube sampler and diamond surface set bit.

CASING RECORD:
None used.

DRILLING MEDIUM:
0.0 to 19.0: None
19.0 to 35.8: Water

DRILLING NOTES:
Reached Auger refusal at 18.0 ft. and drilled to 19.0 ft. with pilot bit. Switched to core setup at 19.0 ft.

HOLE COMPLETION:
Ground water monitoring well installed with standpipe.
-3.0 to 25.4: Solid 2 inch PVC
25.4 to 35.4: 0.020" Slotted screen
Backfilled hole to surface as shown on diagram.
0.0 to 1.0: Concrete.
1.0 to 24.0: Bentonite
24.0 to 35.8: #10-20 Sand.

SAMPLES:
Sampled following intervals for laboratory testing.
3.5 to 5.0: SPT
8.5 to 10.0: SPT

DEPTH	GEOLOGIC SYMBOL	% CORE RECOVERY	% RQD	HARDNESS	WEATHERING	% FINES	% SAND	% GRAVEL	LIQUID LIMIT	PLASTICITY INDEX	MOISTURE CONTENT	LABORATORY CLASSIFICATION	BLOWS / 0.5 FT	VISUAL CLASSIFICATION
	Qal	100	NA											SM
														6209.3
		64				27.0	73.0	0.0	NA	NP	3.8	SM	9/7/7	s(CL)
														6207.6
5														
		96				20.9	79.1	0.0	NA	NP	3.3	SM	20/32/5	
10														
15		100		7	7									
		NR		3	3									SS
20		93	41											
	Kmf													
25		NR	NR	7	5									
30		28	58	6	5									
														6177.4
35		100	0	6	5									CLSTNE 6176.3

BOTTOM OF HOLE

CLASSIFICATION AND PHYSICAL CONDITION

0.0 to 11.3 ft QUATERNARY ALLUVIUM (Qal)

0.0 to 2.8 ft SILTY SAND (SM): About 70% fine sand; about 30% nonplastic fines with rapid dilatancy and low dry strength; maximum size, fine sand; no reaction with HCl.

2.8 to 4.5 ft SANDY LEAN CLAY s(CL): About 60% fines with medium plasticity, high dry strength and medium toughness; About 40% fine sand; maximum size, fine sand; strong reaction with HCl; calcite stringers, dark brown in color.

4.5 to 35.8 ft CRETACEOUS MENEFEE FORMATION (Kmf)

4.5 to 11.3 ft SANDSTONE: Light brown in color. Very soft (H7), decomposed (W9) to very intensely weathered (W8) and can be classified as "POORLY GRADED SAND WITH SILT" with about 90% fine sand; about 10% nonplastic fines with rapid dilatancy and low dry strength; maximum size, fine sand; no reaction with HCl.

11.3 to 17.5 ft SANDSTONE: Fine grained, light to dark brown and orange, Very soft (H7) to Soft (H6), moderately to Intensely weathered (W6), thinly to moderately bedded, bedding planes near horizontal. Core separates along bedding planes, FeOx staining, weak reaction with HCl.

17.5 to 21.0 ft SANDSTONE: Fine grained, gray in color and calcareous. Hard (H3), slightly weathered to fresh (W3), thinly to moderately bedded. Strong reaction with HCl.

21.0 to 34.7 ft POOR RECOVERY: Recovered material is fine grained, light to dark brown and orange. Very soft (H7) to Soft (H6), moderately weathered (W5), thinly to moderately bedded, bedding planes near horizontal. Core separates along bedding planes, FeOx staining, weak reaction with HCl.

34.7 to 35.8 ft CLAYSTONE: Gray in color, soft (H6), moderately weathered (W5), sandy and thinly to moderately bedded. Slakes rapidly, no reaction with HCl.

STRATIGRAPHY:

0.0 to 4.5 ft: QUATERNARY ALLUVIUM (Qal)
4.5 to 35.8 ft: CRETACEOUS MENEFEE FORMATION (Kmf)

COMMENTS:

HSA= hollow stem auger NA= not available ft= feet NE= not encountered NP= non plastic NR= no recovery HCl= hydrochloric acid FeOx= iron oxide CaCOx= calcium carbonate MnOx= manganese oxide SPT= standard penetration test HQ3= coring system SS= sandstone CLSTNE= claystone

The data for the center column and "classification and physical conditions" column are based on Bureau of Reclamation Geology Field Manual and Drawing Titled for designs and specification as follows "Drawing No. 40-D-6493 Standard Descriptions and Descriptive Criteria for rock. Drawing No. 40-D-6499 Standard Descriptors and Descriptive Criteria for Discontinuities.

Observation well installed.

Piezometer Number/Hole: DHPP7-16-3
Date: 7/19/16
Station: N/A Offset: N/A
Surface Elevation: 6212.1
Type of Piezometer: Monitoring Well
Tip Elevation: 6215.1
Influence Zone Interval: 6186.7-6176.7

Completion Diagram

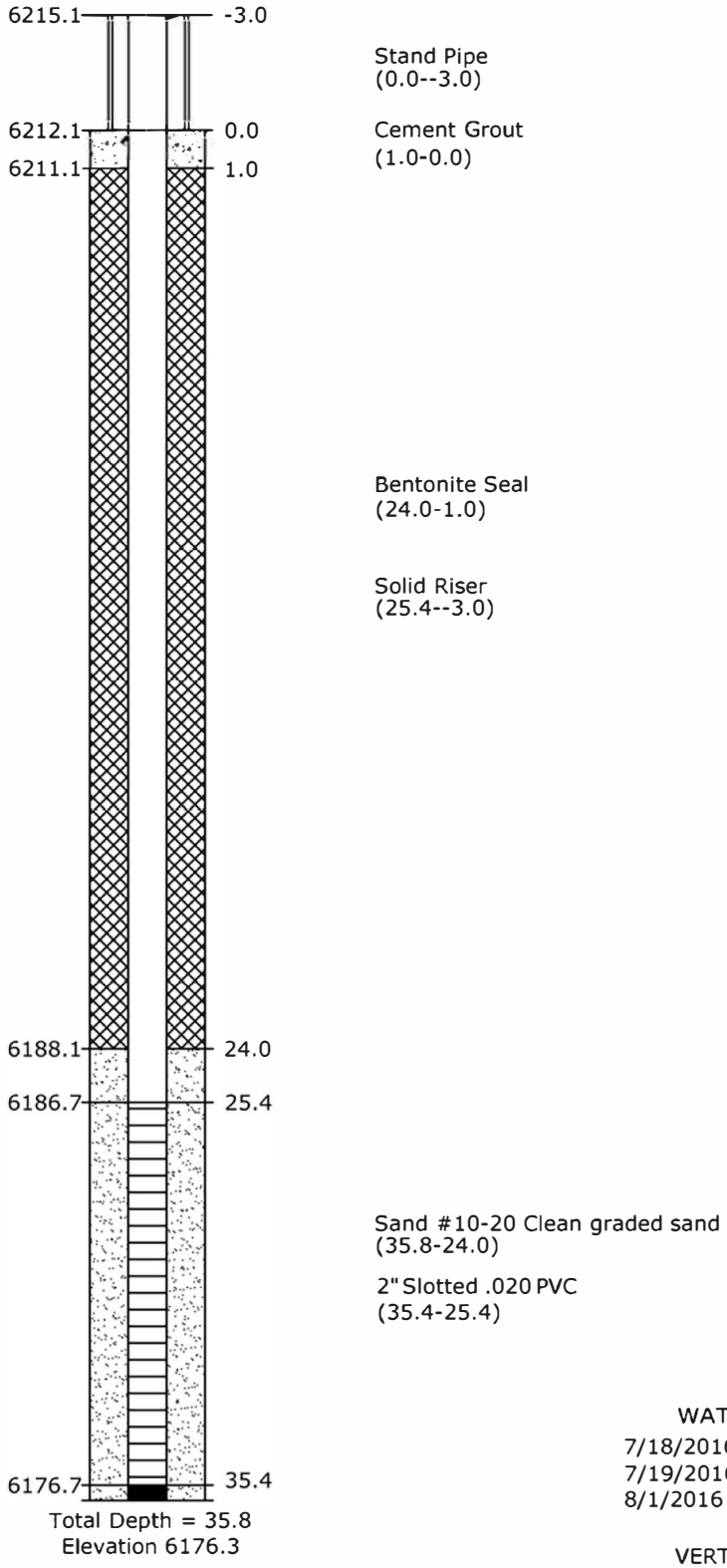

WATER LEVEL DATA

7/18/2016	30.7 ft (6181.4)
7/19/2016	30.8 ft (6181.3)
8/1/2016	30.5 ft (6181.6)

VERTICAL SCALE 1"=5'

GEOLOGIC LOG OF DRILL HOLE NO. DHPP7-16-4

FEATURE: Pumping Plant 7
LOCATION: Foundation Investigation
BEGUN: 7/18/16 FINISHED: 7/18/16
DEPTH AND ELEVATION OF WATER LEVEL: NE
DATE MEASURED: 7/18/2016

PROJECT: Navajo Gallup Water Supply Project
COORDINATES: N 1,729,002.1 E 2,454,346.7 83 State Plane
TOTAL DEPTH: 34.0
DEPTH TO BEDROCK: 7.3

STATE: New Mexico
GROUND ELEVATION: 6214.3 ft. NAD-83
ANGLE FROM HORIZONTAL: -90
HOLE LOGGED BY: C. Beyer
REVIEWED BY: J. Gilbert

NOTES

All measurements are from ground level and are the same as those used by drillers.

All measurements are reported in feet except where noted.

DRILLED BY: Great Plains Drill Crew
DRILLER: Sean Rafferty
HELPER: Rueben Perez
HELPER: Bob Sammons

PURPOSE:
Preconstruction soil and bedrock foundation investigations.

DRILL EQUIPMENT:
CME Model 85 truck mounted rotary drill rig.

DRILL METHOD:
0.0 to 19.0: 4.25 inch HSA and dry core system.
19.0 to 21.5: 4.25 inch HSA with pilot bit.
21.5 to 34.0: 4.25 inch HSA and dry core system.

CASING RECORD:
None used.

DRILLING MEDIUM:
0.0 to 34.0: None

DRILLING NOTES:
Reached hard sandstone at 17.0. Augering was very slow and difficult for about 40 minutes. Crew switched to pilot bit to penetrate hard sandstone bed without sampling from 19.0 to 21.5.

HOLE COMPLETION:
Backfilled with bentonite and cuttings.

SAMPLES:
Sampled following interval for laboratory testing.
4.0 to 5.5: SPT

DEPTH	GEOLOGIC SYMBOL	% CORE RECOVERY	% RQD	HARDNESS	WEATHERING	LABORATORY DATA: % FINES	% SAND	% GRAVEL	LIQUID LIMIT	PLASTICITY INDEX	MOISTURE CONTENT	LABORATORY CLASSIFICATION	BLOWS / 0.5 FT	VISUAL CLASSIFICATION
	Qal	87	NA											SC
5						52.9	47.1	0.0	29.6	15.1	6.5	s(CL)	9/14/16	
		92												6207.0
	Kmf			7	7									
10		100		6	5									
15		100	NA											
		100		3	3									
20		NR												SS
		74												
25		100		6	5									
30		100												6180.3

BOTTOM OF HOLE

CLASSIFICATION AND PHYSICAL CONDITION

0.0 to 7.3 ft QUATERNARY ALLUVIUM (Qal)

0.0 to 7.3 ft CLAYEY SAND (SC): About 75% fine sand; about 25% fines with medium plasticity, medium toughness, medium dry strength and slow dilatancy; maximum size, fine sand; strong reaction with HCl.

7.3 to 34.0 ft CRETACEOUS MENEFEE FORMATION (Kmf)

7.3 to 17.0 ft SANDSTONE: Fine grained, light to dark brown and orange. Very soft (H7) to soft (H6), moderately to Intensely weathered (W6), thinly to moderately bedded, bedding planes near horizontal. Core separates along bedding planes, FeOx staining, weak reaction with HCl.

17.0 to 21.5 ft SANDSTONE: Fine grained, gray in color and calcareous. Hard (H3), slightly weathered to fresh (W3), thinly to moderately bedded. Strong reaction with HCl.

21.5 to 34.0 ft SANDSTONE: Fine grained, light to dark brown and orange. Soft (H6), moderately weathered (W5), thinly to moderately bedded, bedding planes near horizontal. Core separates along bedding planes, FeOx staining and weak reaction with HCl. Core recovered in thin wafers.

STRATIGRAPHY:

0.0 to 7.3 ft: QUATERNARY ALLUVIUM (Qal)
7.3 to 34.0 ft: CRETACEOUS MENEFEE FORMATION (Kmf)

COMMENTS:

HSA= hollow stem auger NA= not available ft= feet NE= not encountered NP= non plastic NR= no recovery HCl= hydrochloric acid FeOx= iron oxide CaCOx= calcium carbonate MnOx= manganese oxide SPT= standard penetration test HQ3= coring system SS= sandstone CLSTNE= claystone

The data for the center column and "classification and physical conditions" column are based on Bureau of Reclamation Geology Field Manual and Drawing Titled for designs and specification as follows "Drawing No. 40-D-6493 Standard Descriptions and Descriptive Criteria for rock. Drawing No. 40-D-6499 Standard Descriptors and Descriptive Criteria for Discontinuities.

GEOLOGIC LOG OF DRILL HOLE NO. DHPP7-16-5

FEATURE: Pumping Plant 7
LOCATION: Tank
BEGUN: 4/9/16 FINISHED: 4/10/16
DEPTH AND ELEVATION OF WATER LEVEL: 31.5 ft. (6179.5)
DATE MEASURED: 4/10/2016

PROJECT: Navajo Gallup Water Supply Project
COORDINATES: N 1,729,461.0 E 2,454,481.2 83 State Plane
TOTAL DEPTH: 40.0
DEPTH TO BEDROCK: 3.8

STATE: New Mexico
GROUND ELEVATION: 6211.0 ft. NAD-83
ANGLE FROM HORIZONTAL: -90
HOLE LOGGED BY: P. Gardner
REVIEWED BY: J. Gilbert

NOTES

All measurements are from ground level and are the same as those used by drillers.

All measurements are reported in feet except where noted.

DRILLED BY: Upper Colorado Drill Crew
DRILLER: Kyle Killebrew
HELPER: Joe Proctor
HELPER: Renato Matheson

PURPOSE:
Preconstruction soil and bedrock foundation investigations.

DRILL EQUIPMENT:
CME Model 85 truck mounted rotary drill rig.

DRILL METHOD:
0.0 to 9.5: 4.25 inch HSA and dry core system with SPT.
9.5 to 37.0: 4.25 inch HSA and dry core system.
37.0 to 38.0: 4.25 inch HSA and dry core system with California Sampler.
38.0 to 38.5: 4.25 inch HSA and dry core system
38.5 to 40.0: 4.25 inch HSA and dry core system with Pilot Bit.

CASING RECORD:
None used

DRILLING MEDIUM:
0.0 to 26.5: None
26.5 to 40.0: Water

DRILLING NOTES:
0.0 to 3.0: Pilot bit.
3.0 to 37.0: Dry core, easy auger. Wet at 28.0.
37.0 to 38.5: Dry core, difficult to auger to refusal.
38.5 to 40.0: HSA with pilot bit, no recovery.

HOLE COMPLETION:
Backfilled with bentonite and auger cuttings.

SAMPLES:
Sampled following intervals for swell and laboratory testing.
3.0 to 4.5: SPT
8.0 to 9.5: SPT
37.0 to 38.0: California Sample

DEPTH	GEOLOGIC SYMBOL	% CORE RECOVERY	% RQD	HARDNESS	WEATHERING	% FINES	% SAND	% GRAVEL	LIQUID LIMIT	PLASTICITY INDEX	MOISTURE CONTENT	LABORATORY CLASSIFICATION	BLOWS / 0.5 FT	VISUAL CLASSIFICATION
	Qal													SC
						18.2	81.8	0.0	NA	NP	2.8	SM	13/15/18	6207.2
5		90												
						43.4	66.6	0.0	NA	NP	7.5	SM	16/49/50	
10		100												
15		100												
20	Kmf	100	NA	6	7									SS
25		100												
30		100												
														6176.7 CLSTNE
35		96		5										SS
														6174.0 CLSTNE
		100		6 5 6	4								50/NA	6173.5 SS CLSTNE
		NR		5-4										SS 6171.0
40														

BOTTOM OF HOLE

CLASSIFICATION AND PHYSICAL CONDITION

0.0 to 3.8 ft QUATERNARY ALLUVIUM (Qal)

0.0 to 3.8 ft CLAYEY SAND (SC): About 80% fine sand; about 20% fines with low plasticity, low dry strength, low toughness and no dilatancy; maximum size, fine sand; strong reaction with HCl. Light brown and moist.

3.8 to 40.0 ft CRETACEOUS MENEFEE FORMATION (Kmf)

3.8 to 34.3 ft SANDSTONE: Fine grained, tan to light brown and orange. Soft (H6) and can be grooved with thumbnail. Intensely weathered (W7) discolored and oxidation throughout. Friable, easily broken on bedding planes with FeOx staining and CaCOx. No to weak reaction with HCl. Laminated to thinly bedded. Bedding planes near horizontal. Carbonaceous interval found between 33.4 and 33.5 ft.

34.3 to 34.7 ft CLAYSTONE: Light to dark gray and black. Soft (H6) and can be scratched with thumbnail. Moderately to slightly weathered (W4) with limited discoloration and preserved texture. No reaction with HCl. Laminated to thinly bedded. Bedding planes near horizontal.

34.7 to 37.0 ft SANDSTONE: Fine grained, light to dark brown and orange. Moderately soft (H5) and can be grooved with a knife. Moderately to slightly weathered (W4) with limited discoloration and preserved texture. Easily broken on bedding planes and FeOx staining present. No to weak reaction with HCl. Laminated to moderately bedded. Bedding planes near horizontal.

37.0 to 37.3 ft CLAYSTONE: Fine grained, light to dark gray and black. Soft (H6) and can be easily scratched with thumbnail. Moderately to slightly weathered (W4) with limited discoloration and preserved texture. No reaction with HCl. Laminated to thinly bedded. Bedding planes near horizontal.

37.3 to 37.5 ft SANDSTONE: Fine grained, light to dark brown and orange. Moderately soft (H5) and can be grooved with a knife. Moderately to slightly weathered (W4) with limited discoloration and preserved texture. Easily broken on bedding planes and FeOx staining present. No to weak reaction with HCl. Laminated to moderately bedded. Bedding planes near horizontal.

37.5 to 38.3 ft CLAYSTONE: Light to dark gray and black. Soft (H6) and can be scratched with thumbnail. Moderately to slightly weathered (W4) with limited discoloration and preserved texture. No reaction with HCl. Laminated to thinly bedded. Bedding planes near horizontal.

38.3 to 40.0 ft SANDSTONE: Fine grained, light to dark brown and orange. Moderately soft (H5) to moderately hard (H4). Moderately to slightly weathered (W4) with limited discoloration and preserved texture. Easily broken on bedding planes and FeOx staining present. No to weak reaction with HCl. Laminated to moderately bedded. Bedding planes near horizontal. HSA with pilot bit, no recovery from 38.5 to 40.0 ft.

STRATIGRAPHY:

0.0 to 3.8 ft: QUATERNARY ALLUVIUM (Qal)
3.8 to 40.0 ft: CRETACEOUS MENEFEE FORMATION (Kmf)

COMMENTS:

HSA= hollow stem auger NA= not available ft= feet NE= not encountered NP= non plastic NR= no recovery HCl= hydrochloric acid FeOx= iron oxide CaCOx= calcium carbonate MnOx= manganese oxide SPT= standard penetration test HQ3= coring system SS= sandstone CLSTNE= claystone

The data for the center column and "classification and physical conditions" column are based on Bureau of Reclamation Geology Field Manual and Drawing Titled for designs and specification as follows "Drawing No. 40-D-6493 Standard Descriptions and Descriptive Criteria for rock. Drawing No. 40-D-6499 Standard Descriptors and Descriptive Criteria for Discontinuities.

GEOLOGIC LOG OF DRILL HOLE NO. DHPP7-16-6

FEATURE: Pumping Plant 7
LOCATION: Tank
BEGUN: 4/9/16 FINISHED: 4/9/16
DEPTH AND ELEVATION OF WATER LEVEL: NE
DATE MEASURED: 4/9/2016

PROJECT: Navajo Gallup Water Supply Project
COORDINATES: N 1,729,341.5 E 2,454,402.4 83 State Plane
TOTAL DEPTH: 49.5
DEPTH TO BEDROCK: 3.4

STATE: New Mexico
GROUND ELEVATION: 6211.0 ft. NAD-83
ANGLE FROM HORIZONTAL: -90
HOLE LOGGED BY: P. Gardner
REVIEWED BY: J. Gilbert

NOTES

All measurements are from ground level and are the same as those used by drillers.

All measurements are reported in feet except where noted.

DRILLED BY: Upper Colorado Drill Crew
DRILLER: Kyle Killebrew
HELPER: Joe Proctor
HELPER: Renato Matheson

PURPOSE:
Preconstruction soil and bedrock foundation investigations.

DRILL EQUIPMENT:
CME Model 85 truck mounted rotary drill rig.

DRILL METHOD:
0.0 to 21.5: 4.25 inch HSA and dry core system with SPT.
21.5 to 23.0: 4.25 inch HSA and dry core system with Pilot Bit.
23.0 to 49.5: HQ3 wireline coring system with 5 foot split tube sampler and carbide surface set bit.

CASING RECORD:
None used

DRILLING MEDIUM:
0.0 to 23.0: None
23.0 to 49.5: Water

DRILLING NOTES:
0.0 to 3.0: Pilot bit.
3.0 to 21.5: Dry core, easy auger to refusal.
21.5 to 23.0: HSA with pilot bit. No recovery.
23.0 to 29.5: HQ3 Typical drilling.
29.5 to 34.5: HQ3 Poor recovery, washed by drill.
34.5 to 49.5: HQ3 Easy drilling.

HOLE COMPLETION:
Backfilled with bentonite and auger cuttings.

SAMPLES:
Sampled following intervals for laboratory testing.
3.0 to 4.5: SPT
5.5 to 7.0: SPT
10.5 to 12.0: SPT
13.0 to 14.5: SPT
18.0 to 19.5: SPT

DEPTH	GEOLOGIC SYMBOL	% CORE RECOVERY	% RQD	HARDNESS	WEATHERING	% FINES	% SAND	% GRAVEL	LIQUID LIMIT	PLASTICITY INDEX	MOISTURE CONTENT	LABORATORY CLASSIFICATION	BLOWS / 0.5 FT	VISUAL CLASSIFICATION
	Qal													SC
														6207.6
	Kmf	100			9	28.8	71.2	0.0	NA	NP	4.6	SM	10/15/19	
5														
		94		7		22.9	77.1	0.0	NA	NP	4.1	SM	13/34/50	
10					7									
		100				25.5	74.5	0.0	NA	NP	5.3	SM	33/50/NA	
				5										
		100				28.5	71.5	0.0	NA	NP	6.4	SM	37/50/NA	
15				3										
		100												SS
						26.8	73.2	0.0	NA	NP	8.6	SM	34/50/NA	
20		100												
		NR												
		100	0											
25		64	0	5										
														6182.2
														6182.0
30		36	0		4									SS
														6176.6
														6176.5
35		100	94											6173.9
40		100	92	6										CLSTNE
45		100	92											
														6161.5

BOTTOM OF HOLE

CLASSIFICATION AND PHYSICAL CONDITION

0.0 to 3.4 ft QUATERNARY ALLUVIUM (Qal)

0.0 to 3.4 ft CLAYEY SAND (SC): About 80% fine sand; about 20% fines with low plasticity, low dry strength, low toughness and no dilatancy; maximum size, fine sand; strong reaction with HCl. Light brown and moist.

3.4 to 49.5 ft CRETACEOUS MENEFEE FORMATION (Kmf)

3.4 to 7.7 ft SANDSTONE: Fine grained, tan to light brown. Decomposed (W9) and softer than (H7) and can be classified as "SILTY SAND" with about 85% fine sand; about 15% nonplastic fines with no dry strength and rapid dilatancy; maximum size, fine sand; no to weak reaction with HCl. Light brown and moist. Clayclasts found between 7.0 and 7.7 ft.

7.7 to 15.0 ft SANDSTONE: Fine grained, tan to light brown and orange. Moderately soft (H5) and can be easily grooved with knife. Intensely weathered (W7) discolored and oxidation throughout. Easily broken on bedding planes and FeOx and CaCOx in joints. No to weak reaction with HCl. Laminated to thinly bedded. Bedding planes near horizontal. Carbonaceous blebs and lamination present.

15.0 to 15.6 ft SANDSTONE: Fine grained, light gray in color. Hard (H3) and difficult to scratch with knife. Moderately to slightly weathered (W4) with limited discoloration and preserved texture. Strong reaction with HCl. Laminated to thinly bedded. Bedding planes near horizontal. Highly fractured.

15.6 to 35.1 ft SANDSTONE: Fine grained, light to dark brown. Moderately soft (H5) and can be easily grooved with knife. Moderately to slightly weathered (W4) with limited discoloration and preserved texture. Easily broken on bedding planes and FeOx staining present. No to weak reaction with HCl. Laminated to moderately bedded. Bedding planes near horizontal. No recovery between 21.5 and 23.0 ft. Claystone interval between 28.8 and 29.0 ft and between 34.4 and 34.5 ft.

35.1 to 49.5 ft CLAYSTONE: Light to dark gray and mottled with black and red. Soft (H6) and can be scratched with thumbnail. Moderately to slightly weathered (W4) with limited discoloration and preserved texture. No reaction with HCl. FeOx staining present. Laminated to thinly bedded. Bedding planes vary from 10° to near horizontal.

STRATIGRAPHY:

0.0 to 3.4 ft: QUATERNARY ALLUVIUM (Qal)
3.4 to 49.5 ft: CRETACEOUS MENEFEE FORMATION (Kmf)

COMMENTS:

HSA= hollow stem auger NA= not available ft= feet NE= not encountered NP= non plastic NR= no recovery HCl= hydrochloric acid FeOx= iron oxide CaCOx= calcium carbonate MnOx= manganese oxide SPT= standard penetration test HQ3= coring system SS= sandstone CLSTNE= claystone

The data for the center column and "classification and physical conditions" column are based on Bureau of Reclamation Geology Field Manual and Drawing Titled for designs and specification as follows "Drawing No. 40-D-6493 Standard Descriptions and Descriptive Criteria for rock. Drawing No. 40-D-6499 Standard Descriptors and Descriptive Criteria for Discontinuities.

GEOLOGIC LOG OF DRILL HOLE NO. DHPP7-16-7

FEATURE: Pumping Plant 7
LOCATION: Surge Tank
BEGUN: 4/12/16 FINISHED: 4/12/16
DEPTH AND ELEVATION OF WATER LEVEL: NE
DATE MEASURED: 4/12/2016

PROJECT: Navajo Gallup Water Supply Project
COORDINATES: N 1,729,119.0 E 2,454,294.3 83 State Plane
TOTAL DEPTH: 39.7
DEPTH TO BEDROCK: 4.9

STATE: New Mexico
GROUND ELEVATION: 6213.7 ft. NAD-83
ANGLE FROM HORIZONTAL: -90
HOLE LOGGED BY: P. Gardner
REVIEWED BY: J. Gilbert

NOTES

All measurements are from ground level and are the same as those used by drillers.

All measurements are reported in feet except where noted.

DRILLED BY: Upper Colorado Drill Crew
DRILLER: Kyle Killebrew
HELPER: Joe Proctor
HELPER: Renato Matheson

PURPOSE:
Preconstruction soil and bedrock foundation investigations.

DRILL EQUIPMENT:
CME Model 85 truck mounted rotary drill rig.

DRILL METHOD:
0.0 to 4.5: 4.25 inch HSA and dry core system with SPT.
4.5 to 17.0: 4.25 inch HSA and dry core system.
17.0 to 18.0: 4.25 inch HSA and dry core system with Pilot Bit.
18.0 to 39.7: HQ3 wireline coring system with 5 foot split tube sampler and carbide surface set bit.

CASING RECORD:
None used

DRILLING MEDIUM:
0.0 to 18.0: None
18.0 to 39.7: Water

DRILLING NOTES:
0.0 to 3.0: Pilot bit.
3.0 to 17.0: Dry core, easy auger to refusal.
17.0 to 18.0: HSA with pilot bit. No recovery.
18.0 to 19.7: HQ3 Easy drilling.
19.7 to 24.7: HQ3 Poor recovery, washed by drill.
24.7 to 29.7: HQ3 Easy drilling.
29.7 to 34.7: HQ3 Poor recovery, washed by drill.
34.7 to 39.7: HQ3 Easy drilling.

HOLE COMPLETION:
Backfilled with bentonite and auger cuttings.

SAMPLES:
Sampled following interval for laboratory testing.
3.0 to 4.5: SPT

DEPTH	GEOLOGIC SYMBOL	% CORE RECOVERY	% RQD	HARDNESS	WEATHERING	% FINES	% SAND	% GRAVEL	LIQUID LIMIT	PLASTICITY INDEX	MOISTURE CONTENT	LABORATORY CLASSIFICATION	BLOWS / 0.5 FT	VISUAL CLASSIFICATION
	Qal													SC
						55.8	44.2	0.0	30	15.5	7.9	s(CL)	6/8/14	
														6208.8
5	Kmf	80		7	7									
10		100		5										
15		98												
		NR		3	4									
		100	0	5	7									
20		20	0	6	6									SS
25		100	66											
30		40	14											
35		100	36	5										
														6175.6
				6	5									CLSTNE 6174.0

BOTTOM OF HOLE

CLASSIFICATION AND PHYSICAL CONDITION

0.0 to 4.9 ft QUATERNARY ALLUVIUM (Qal)

0.0 to 4.9 ft CLAYEY SAND (SC): About 70% fine sand; about 30% fines with low plasticity, low dry strength, low toughness and no dilatancy; maximum size, fine sand; strong reaction with HCl. Brown and dry.

4.9 to 39.7 ft CRETACEOUS MENEFEE FORMATION (Kmf)

4.9 to 10.3 ft SANDSTONE: Fine grained, tan to light brown. Very soft (H7) and can be gouged with fingernail. Intensely weathered (W7) discolored and oxidation throughout. Friable, easily broken on bedding planes and FeOx and CaCOx in joints. No to weak reaction with HCl. Laminated to thinly bedded. Bedding planes near horizontal.

10.3 to 17.0 ft SANDSTONE: Fine grained, tan to light brown. Moderately soft (H5), can be scratched with moderate pressure of a knife. Intensely weathered (W7), discolored and oxidation throughout. Friable and FeOx staining. Thinly to moderately bedded near horizontal. Separates on bedding planes. No reaction with HCl.

17.0 to 18.8 ft SANDSTONE: Fine grained and gray. Hard (H3) and moderately to slightly weathered (W4). Strong reaction with HCl. HSA with pilot bit and no recovery between 17.0 and 18.0 ft.

18.8 to 38.1 ft SANDSTONE: Fine grained, tan and light to dark brown. Moderately soft (H5) to soft (H6) and can be easily grooved with knife. Intensely weathered (W7) becoming Intensely to moderately weathered (W6) below 19.4 ft. Friable, easily broken on bedding planes, FeOx and MnOx staining present. No to weak reaction with HCl. Laminated to moderately bedded. Bedding planes from 10° to horizontal. Clay rip up clasts from 28.5 to 34.2 ft.

38.1 to 39.7 ft CLAYSTONE: Light to dark gray. Soft (H6) and can be scratched with thumbnail. Moderately weathered (W5) with discoloration and oxidation. Laminated to moderately bedded. No reaction with HCl.

STRATIGRAPHY:

0.0 to 4.9 ft: QUATERNARY ALLUVIUM (Qal)
4.9 to 39.7 ft: CRETACEOUS MENEFEE FORMATION (Kmf)

COMMENTS:

HSA= hollow stem auger NA= not available ft= feet NE= not encountered NP= non plastic NR= no recovery HCl= hydrochloric acid FeOx= iron oxide CaCOx= calcium carbonate MnOx= manganese oxide SPT= standard penetration test HQ3= coring system SS= sandstone CLSTNE= claystone

The data for the center column and "classification and physical conditions" column are based on Bureau of Reclamation Geology Field Manual and Drawing Titled for designs and specification as follows "Drawing No. 40-D-6493 Standard Descriptions and Descriptive Criteria for rock. Drawing No. 40-D-6499 Standard Descriptors and Descriptive Criteria for Discontinuities.

GEOLOGIC LOG OF DRILL HOLE NO. DHPP7-16-8

FEATURE: Pumping Plant 7
LOCATION: Chlorine Building
BEGUN: 4/12/16 FINISHED: 4/12/16
DEPTH AND ELEVATION OF WATER LEVEL: NE
DATE MEASURED: 4/12/2016

PROJECT: Navajo Gallup Water Supply Project
COORDINATES: N 1,729,140.5 E 2,454,222.0 83 State Plane
TOTAL DEPTH: 40.0
DEPTH TO BEDROCK: 2.6

STATE: New Mexico
GROUND ELEVATION: 6213.8 ft. NAD-83
ANGLE FROM HORIZONTAL: -90
HOLE LOGGED BY: P. Gardner
REVIEWED BY: J. Gilbert

NOTES

All measurements are from ground level and are the same as those used by drillers.

All measurements are reported in feet except where noted.

DRILLED BY: Upper Colorado Drill Crew
DRILLER: Kyle Killebrew
HELPER: Joe Proctor
HELPER: Renato Matheson

PURPOSE:
Preconstruction soil and bedrock foundation investigations.

DRILL EQUIPMENT:
CME Model 85 truck mounted rotary drill rig.

DRILL METHOD:
0.0 to 4.5: 4.25 inch HSA and dry core system with SPT.
4.5 to 24.0: 4.25 inch HSA and dry core system.
24.0 to 24.3: 4.25 inch HSA and dry core system with Pilot Bit.
24.3 to 40.0: HQ3 wireline coring system with 5 foot split tube sampler and carbide surface set bit.

CASING RECORD:
None used

DRILLING MEDIUM:
0.0 to 24.3: None
24.3 to 40.0: Water

DRILLING NOTES:
0.0 to 3.0: Pilot bit.
3.0 to 24.0: Dry core, easy auger to refusal.
24.0 to 24.3: HSA with pilot bit to refusal.
24.3 to 40.0: HQ3 Easy drilling.

HOLE COMPLETION:
Backfilled with bentonite and auger cuttings.

SAMPLES:
Sampled following interval for laboratory testing.
3.0 to 4.5: SPT

DEPTH	GEOLOGIC SYMBOL	% CORE RECOVERY	% RQD	HARDNESS	WEATHERING	% FINES	% SAND	% GRAVEL	LIQUID LIMIT	PLASTICITY INDEX	MOISTURE CONTENT	LABORATORY CLASSIFICATION	BLOWS / 0.5 FT	VISUAL CLASSIFICATION
	Qal													SC 6211.2
	Kmf					38.5	61.5	0.0	NA	NP	4.7	SM	12/13/14	
5		74		5										
10		100			7									
15		100		7										
20		100		6										SS
		100												
		NR												
25		57	0	3	4									
		100	80											
30		88	80	5	6									
35		100	44											6175.7
40				6	5									CLSTNE 6173.8

BOTTOM OF HOLE

CLASSIFICATION AND PHYSICAL CONDITION

0.0 to 2.6 ft QUATERNARY ALLUVIUM (Qal)

0.0 to 2.6 ft CLAYEY SAND (SC): About 70% fine sand; about 30% fines with low plasticity, low dry strength, low toughness and no dilatancy; maximum size, fine sand; strong reaction with HCl. Brown and dry.

2.6 to 40.0 ft CRETACEOUS MENEFEE FORMATION (Kmf)

2.6 to 6.3 ft SANDSTONE: Fine grained, tan to light brown and orange. Very soft (H7) and decomposed (W9) and can be described as "SILTY SAND" with about 85% fine sand; about 15% nonplastic fines with no dry strength and rapid dilatancy; maximum size, fine sand. No to weak reaction with HCl. Laminated to thinly bedded. Bedding planes near horizontal.

6.3 to 13.0 ft SANDSTONE: Fine grained, tan to light brown. Moderately soft (H5) and can be grooved with knife. Intensely weathered (W7) discolored and oxidation throughout. Friable, easily broken on bedding planes and FeOx and CaCOx in joints. No to weak reaction with HCl. Laminated to thinly bedded. Bedding planes near horizontal.

13.0 to 16.7 ft SANDSTONE: Fine grained, tan to light brown and argillaceous. Very soft (H7) and can be easily scratched with thumbnail. Intensely weathered (W7), discolored and oxidation throughout. Friable and FeOx staining present. No reaction with HCl.

16.7 to 24.0 ft SANDSTONE: Fine grained, light brown and brownish yellow at 21.0 ft. Soft (H6) and can be grooved with thumbnail. Intensely weathered (W7), discolored and oxidation throughout. Friable, easily broken and FeOx staining present. No to weak reaction with HCl. Laminated to thinly bedded. Bedding planes near horizontal.

24.0 to 24.3 ft SANDSTONE: No recovery. HSA with pilot bit.

24.3 to 26.0 ft SANDSTONE: Fine grained and gray. Hard (H3) and moderately to slightly weathered (W4). Strong reaction with HCl.

26.0 to 38.1 ft SANDSTONE: Fine grained, light to dark brown. Moderately soft (H5) and can be easily grooved with knife. Intensely to moderately weathered (W6), discolored and oxidation throughout. Friable, easily broken on bedding planes, FeOx and MnOx staining present. No to weak reaction with HCl. Laminated to moderately bedded. Bedding planes from 10° to horizontal.

38.1 to 41.0 ft CLAYSTONE: Light to dark gray. Soft (H6) and can be scratched with thumbnail. Moderately weathered (W5) with discoloration and oxidation. Laminated to moderately bedded. No reaction with HCl.

STRATIGRAPHY:

0.0 to 2.6 ft: QUATERNARY ALLUVIUM (Qal)
2.6 to 40.0 ft: CRETACEOUS MENEFEE FORMATION (Kmf)

COMMENTS:

HSA= hollow stem auger NA= not available ft= feet NE= not encountered NP= non plastic NR= no recovery HCl= hydrochloric acid FeOx= iron oxide CaCOx= calcium carbonate MnOx= manganese oxide SPT= standard penetration test HQ3= coring system SS= sandstone CLSTNE= claystone

The data for the center column and "classification and physical conditions" column are based on Bureau of Reclamation Geology Field Manual and Drawing Titled for designs and specification as follows "Drawing No. 40-D-6493 Standard Descriptions and Descriptive Criteria for rock. Drawing No. 40-D-6499 Standard Descriptors and Descriptive Criteria for Discontinuities.

GEOLOGIC LOG OF DRILL HOLE NO. DHPP7-16-9

FEATURE: Pumping Plant 7
LOCATION: Tank
BEGUN: 4/10/16 FINISHED: 4/10/16
DEPTH AND ELEVATION OF WATER LEVEL: NE
DATE MEASURED: 4/10/2016

PROJECT: Navajo Gallup Water Supply Project
COORDINATES: N 1,729,524.4 E 2,454,377.4 83 State Plane
TOTAL DEPTH: 40.0
DEPTH TO BEDROCK: 10.3

STATE: New Mexico
GROUND ELEVATION: 6212.6 ft. NAD-83
ANGLE FROM HORIZONTAL: -90
HOLE LOGGED BY: P. Gardner
REVIEWED BY: J. Gilbert

NOTES

All measurements are from ground level and are the same as those used by drillers.

All measurements are reported in feet except where noted.

DRILLED BY: Upper Colorado Drill Crew
DRILLER: Kyle Killebrew
HELPER: Joe Proctor
HELPER: Renato Matheson

PURPOSE:
Preconstruction soil and bedrock foundation investigations.

DRILL EQUIPMENT:
CME Model 85 truck mounted rotary drill rig.

DRILL METHOD:
0.0 to 9.5: 4.25 inch HSA and dry core system with SPT.
9.5 to 20.0: 4.25 inch HSA and dry core system.
20.0 to 20.0: 4.25 inch HSA and dry core system with Pilot Bit.
20.0 to 40.0: HQ3 wireline coring system with 5 foot split tube sampler and carbide surface set bit.

CASING RECORD:
None used

DRILLING MEDIUM:
0.0 to 20.0: None
20.0 to 40.0: Water

DRILLING NOTES:
0.0 to 3.0: Pilot bit.
3.0 to 20.0: Dry core, easy auger to refusal.
20.0 to 20.0: HSA with pilot bit with no advancement.
20.0 to 40.0: HQ3 Easy drilling. Water loss at 33.0.

HOLE COMPLETION:
Backfilled with bentonite and auger cuttings.

SAMPLES:
Sampled following intervals for laboratory testing.
3.0 to 4.5: SPT
8.0 to 9.5: SPT

DEPTH	GEOLOGIC SYMBOL	% CORE RECOVERY	% RQD	HARDNESS	WEATHERING	% FINES	% SAND	% GRAVEL	LIQUID LIMIT	PLASTICITY INDEX	MOISTURE CONTENT	LABORATORY CLASSIFICATION	BLOWS / 0.5 FT	VISUAL CLASSIFICATION
	Qal													
						52.9	47.1	0.0	28.3	14.7	4.9	s(CL)	5/7/7	SC
5		68												
														6205.7
						31.3	68.7	0.0	NA	NP	6.3	SM	28/45/50	SM
10		98												6202.3
15		100		6	7									
		100												
20		94	88	3	4									
25	Kmf			5										SS
		98	84											
30		50	50	4	6									
35		96	0											
				7										6174.3 CLSTNE
				5										SS 6172.6
40														

BOTTOM OF HOLE

CLASSIFICATION AND PHYSICAL CONDITION

0.0 to 10.3 ft QUATERNARY ALLUVIUM (Qal)

0.0 to 6.9 ft CLAYEY SAND (SC): About 75% fine sand; about 25% fines with medium plasticity, medium toughness, medium dry strength and slow dilatancy; maximum size, fine sand; strong reaction with HCl.

6.9 to 10.3 ft SILTY SAND (SM): About 85% fine sand; about 15% nonplastic fines with no dry strength and rapid dilatancy; maximum size, fine sand; no to weak reaction with HCl. Light brown and moist.

10.3 to 40.0 ft CRETACEOUS MENEFEE FORMATION (Kmf)

10.3 to 20.0 ft SANDSTONE: Fine grained, light to dark brown. Soft (H6) and can be easily grooved with thumbnail. Intensely weathered (W7), friable, easily broken on bedding planes and FeOx staining present. No to weak reaction with HCl. Laminated to moderately bedded. Bedding planes near horizontal.

20.0 to 23.8 ft SANDSTONE: Fine grained, light gray to light brown in color. Hard (H3) and difficult to scratch with knife. Moderately to slightly weathered (W4) with limited discoloration and preserved texture. Strong reaction with HCl. Laminated to thinly bedded. Bedding planes near horizontal.

23.8 to 38.3 ft SANDSTONE: Fine grained, light to dark brown. Moderately soft (H5) and can be easily grooved with knife. Sandstone becomes moderately hard (H4) below 25.6 ft. Intensely to moderately weathered (W6). Easily broken on bedding planes and FeOx staining present. No reaction with HCl. Laminated to moderately bedded. Bedding planes near horizontal. Carbon fragments found in bedding planes. Small, 3mm, clay rip-up clasts found between 23.8 and 25.6 ft.

38.3 to 38.8 ft CLAYSTONE: Light to dark gray and mottled with brownish yellow and red. Very soft (H7) and can be scratched with thumbnail. Intensely to moderately weathered (W6). No reaction with HCl. FeOx staining present. Laminated to thinly bedded. Bedding planes vary from 10° to near horizontal.

38.8 to 40.0 ft SANDSTONE: Fine grained, light to dark brown. Moderately soft (H5) and can be easily grooved with knife. Intensely to moderately weathered (W6). Easily broken on bedding planes and FeOx staining present. No reaction with HCl. Laminated to moderately bedded. Carbonaceous laminations present. Bedding planes near horizontal.

STRATIGRAPHY:

0.0 to 10.3 ft: QUATERNARY ALLUVIUM (Qal)
10.3 to 40.0 ft: CRETACEOUS MENEFEE FORMATION (Kmf)

COMMENTS:

HSA= hollow stem auger NA= not available ft= feet NE= not encountered NP= non plastic NR= no recovery HCl= hydrochloric acid FeOx= iron oxide CaCOx= calcium carbonate MnOx= manganese oxide SPT= standard penetration test HQ3= coring system SS= sandstone CLSTNE= claystone

The data for the center column and "classification and physical conditions" column are based on Bureau of Reclamation Geology Field Manual and Drawing Titled for designs and specification as follows "Drawing No. 40-D-6493 Standard Descriptions and Descriptive Criteria for rock. Drawing No. 40-D-6499 Standard Descriptors and Descriptive Criteria for Discontinuities.

GEOLOGIC LOG OF DRILL HOLE NO. DHPP7-16-10

FEATURE: Pumping Plant 7
LOCATION: Foundation Investigation
BEGUN: 4/11/16 FINISHED: 4/11/16
DEPTH AND ELEVATION OF WATER LEVEL: NE
DATE MEASURED: 4/11/2016

PROJECT: Navajo Gallup Water Supply Project
COORDINATES: N 1,729,336.9 E 2,454,265.7 83 State Plane
TOTAL DEPTH: 40.0
DEPTH TO BEDROCK: 6.0

STATE: New Mexico
GROUND ELEVATION: 6212.8 ft. NAD-83
ANGLE FROM HORIZONTAL: -90
HOLE LOGGED BY: P. Gardner
REVIEWED BY: J. Gilbert

NOTES

All measurements are from ground level and are the same as those used by drillers.

All measurements are reported in feet except where noted.

DRILLED BY: Upper Colorado Drill Crew
DRILLER: Kyle Killebrew
HELPER: Joe Proctor
HELPER: Renato Matheson

PURPOSE:
Preconstruction soil and bedrock foundation investigations.

DRILL EQUIPMENT:
CME Model 85 truck mounted rotary drill rig.

DRILL METHOD:
0.0 to 4.5: 4.25 inch HSA and dry core system with SPT.
4.5 to 14.0: 4.25 inch HSA and dry core system.
14.0 to 15.5: 4.25 inch HSA and dry core system with Pilot Bit.
15.5 to 26.5: 4.25 inch HSA and dry core system.
26.5 to 26.5: 4.25 inch HSA and dry core system with Pilot Bit.
26.5 to 40.0: HQ3 wireline coring system with 5 foot split tube sampler and carbide surface set bit.

CASING RECORD:
None used

DRILLING MEDIUM:
0.0 to 26.5: None
26.5 to 40.0: Water

DRILLING NOTES:
0.0 to 3.0: Pilot bit.
3.0 to 14.0: Dry core, easy auger to refusal.
14.0 to 15.5: HSA with pilot bit.
15.5 to 26.5: Dry core to refusal.
26.5 to 26.5: HSA with pilot bit with no advancement.
26.5 to 40.0: HQ3 Typical drilling. Water loss at 29.0. Water returned at 36.0.

HOLE COMPLETION:
Backfilled with bentonite and auger cuttings.

SAMPLES:
Sampled following interval for laboratory testing.
3.0 to 4.5: SPT

DEPTH	GEOLOGIC SYMBOL	% CORE RECOVERY	% RQD	HARDNESS	WEATHERING	% FINES	% SAND	% GRAVEL	LIQUID LIMIT	PLASTICITY INDEX	MOISTURE CONTENT	LABORATORY CLASSIFICATION	BLOWS / 0.5 FT	VISUAL CLASSIFICATION
	Qal													SC
						36.3	63.7	0.0	24.4	6.6	4.7	SC-SM	8/10/9	6209.4
5		80												SM
														6206.8
				6										
10		84			7									
				7										
		100												
15		NR		NA	NA									
				7	7									
		100												
20		100		5										SS
	Kmf													
25		100												
		71	46	3	4									
30														
		100	66											6180.1
				6										CLSTNE
35														SS
		100	88	5										
40														6172.8

BOTTOM OF HOLE

CLASSIFICATION AND PHYSICAL CONDITION

0.0 to 6.0 ft QUATERNARY ALLUVIUM (Qal)

0.0 to 3.4 ft CLAYEY SAND (SC): About 70% fine sand; about 30% fines with low plasticity, low dry strength, low toughness and no dilatancy; maximum size, fine sand; strong reaction with HCl. Brown and dry.

3.4 to 6.0 ft SILTY SAND (SM): About 85% fine sand; about 15% nonplastic fines with no dry strength and rapid dilatancy; maximum size, fine sand; strong reaction with HCl. Light brown and dry.

6.0 to 40.0 ft CRETACEOUS MENEFEE FORMATION (Kmf)

6.0 to 11.2 ft SANDSTONE: Fine grained, tan to light brown and orange. Soft (H6) and intensely weathered (W7). Friable, easily broken on bedding planes and FeOx staining present. No to weak reaction with HCl. Laminated to thinly bedded. Bedding planes near horizontal.

11.2 to 16.8 ft SANDSTONE: Fine grained, tan to light brown and orange. Very soft (H7) and can be easily scratched with thumbnail. Intensely weathered (W7) discolored and oxidation throughout. Friable, easily broken on bedding planes and FeOx staining. No to weak reaction with HCl. Laminated to thinly bedded. Bedding planes near horizontal. No recovery and very difficult to auger with pilot bit from 14.0 to 15.5 ft.

16.8 to 26.5 ft SANDSTONE: Fine grained, light to dark brown. Moderately soft (H5) and can be grooved with a knife with moderate pressure. Moderately to slightly weathered (W4) with limited discoloration and preserved texture. Easily broken on bedding planes and FeOx staining present. No to weak reaction with HCl. Laminated to moderately bedded. Bedding planes near horizontal.

26.5 to 32.7 ft SANDSTONE: Fine grained, light to dark gray in color. Hard (H3) and moderately to slightly weathered (W4). Strong reaction with HCl. Laminated to thinly bedded. Bedding planes near horizontal. Highly fractured between 29.4 to 30.7 ft.

JOINT MEASUREMENTS:

DEPTH	INCL	R	O	T	HL	INFILLING
27.7	50°	5	1	1	3	FeOx

32.7 to 33.1 ft CLAYSTONE: Dark brown. Soft (H6) and can be scratched with thumbnail. Moderately to slightly weathered (W4) with limited discoloration and preserved texture. No reaction with HCl. FeOx staining present. Laminated to thinly bedded.

33.1 to 35.4 ft SANDSTONE: Fine grained, light to dark brown. Soft (H6) and can be scratched with thumbnail. Moderately to slightly weathered (W4) with limited discoloration and preserved texture. Easily broken on bedding planes and FeOx staining present. No to weak reaction with HCl. Laminated to moderately bedded. Bedding planes from 10° to horizontal.

35.4 to 40.0 ft SANDSTONE: Fine grained, light to dark gray and argillaceous. Moderately soft (H5) and can be grooved with a knife with moderate pressure. Moderately to slightly weathered (W4) with limited discoloration and preserved texture. FeOx staining present. No to weak reaction with HCl. Laminated to moderately bedded. Bedding planes from 10° to horizontal.

STRATIGRAPHY:

0.0 to 6.0 ft: QUATERNARY ALLUVIUM (Qal)
6.0 to 40.0 ft: CRETACEOUS MENEFEE FORMATION (Kmf)

COMMENTS:

HSA= hollow stem auger NA= not available ft= feet NE= not encountered NP= non plastic NR= no recovery HCl= hydrochloric acid FeOx= iron oxide CaCOx= calcium carbonate MnOx= manganese oxide SPT= standard penetration test HQ3= coring system SS= sandstone CLSTNE= claystone

The data for the center column and "classification and physical conditions" column are based on Bureau of Reclamation Geology Field Manual and Drawing Titled for designs and specification as follows "Drawing No. 40-D-6493 Standard Descriptions and Descriptive Criteria for rock. Drawing No. 40-D-6499 Standard Descriptors and Descriptive Criteria for Discontinuities.

GEOLOGIC LOG OF DRILL HOLE NO. DHPP7-16-11

FEATURE: Pumping Plant 7
LOCATION: Foundation Investigation
BEGUN: 4/11/16 FINISHED: 4/11/16
DEPTH AND ELEVATION OF WATER LEVEL: 39.0 ft. (6176.1)
DATE MEASURED: 4/11/2016

PROJECT: Navajo Gallup Water Supply Project
COORDINATES: N 1,729,115.7 E 2,454,147.0 83 State Plane
TOTAL DEPTH: 41.0
DEPTH TO BEDROCK: 7.3

STATE: New Mexico
GROUND ELEVATION: 6215.1 ft. NAD-83
ANGLE FROM HORIZONTAL: -90
HOLE LOGGED BY: P. Gardner
REVIEWED BY: J. Gilbert

NOTES

All measurements are from ground level and are the same as those used by drillers.

All measurements are reported in feet except where noted.

DRILLED BY: Upper Colorado Drill Crew
DRILLER: Kyle Killebrew
HELPER: Joe Proctor
HELPER: Renato Matheson

PURPOSE:
Preconstruction soil and bedrock foundation investigations.

DRILL EQUIPMENT:
CME Model 85 truck mounted rotary drill rig.

DRILL METHOD:
0.0 to 9.5: 4.25 inch HSA and dry core system with SPT.
9.5 to 40.0: 4.25 inch HSA and dry core system.
40.0 to 41.0: 4.25 inch HSA and dry core system with California Sampler.

CASING RECORD:
None used

DRILLING MEDIUM:
0.0 to 41.0: None

DRILLING NOTES:
0.0 to 3.0: Pilot bit.
3.0 to 41.0: Dry core, easy auger. Water level measured at 39.0.

HOLE COMPLETION:
Backfilled with bentonite and auger cuttings.

SAMPLES:
Sampled following intervals for swell and laboratory testing.
3.0 to 4.5: SPT
8.0 to 9.5: SPT
15.5 to 17.4: Bag sample
40.0 to 41.0: California Sample

DEPTH	GEOLOGIC SYMBOL	% CORE RECOVERY	% RQD	HARDNESS	WEATHERING	% FINES	% SAND	% GRAVEL	LIQUID LIMIT	PLASTICITY INDEX	MOISTURE CONTENT	LABORATORY CLASSIFICATION	BLOWS / 0.5 FT	VISUAL CLASSIFICATION
	Qal		NA											
						39.5	60.5	0.0	23.5	5.9	5.1	SC-SM	6/9/8	SC
5		64												
														6207.8
	Kmf					45.7	54.3	0.0	24.7	6.3	5.6	SC-SM	18/35/50	SM
10		84			7									6204.5
				6										SS
15		96												6199.6
					5	87.3	12.7	0.0	40.1	19.9	16.2	CL		CLSTNE
														6197.7
20		100		7										
25		100			7									SS
30		100		5										
35		98												
		100												6176.1
40		NA		6	5								50/NA	CLSTNE
														6174.1

BOTTOM OF HOLE

CLASSIFICATION AND PHYSICAL CONDITION

0.0 to 7.3 ft QUATERNARY ALLUVIUM (Qal)

0.0 to 7.3 ft CLAYEY SAND (SC): About 70% fine sand; about 30% fines with low plasticity, low dry strength, low toughness and no dilatancy; maximum size, fine sand; strong reaction with HCl. Brown and dry.

7.3 to 41.0 ft CRETACEOUS MENEFEE FORMATION (Kmf)

7.3 to 10.6 ft SANDSTONE: Fine grained, tan to light brown. Very soft (H7), decomposed (W9) and can be described as "SILTY SAND" with about 85% fine sand; about 15% nonplastic fines with no dry strength and rapid dilatancy; maximum size, fine sand; strong reaction with HCl.

10.6 to 15.5 ft SANDSTONE: Fine grained, tan to light brown and orange. Soft (H6) and can be scratched with thumbnail. Intensely weathered (W7) discolored and oxidation throughout. Friable and FeOx staining present. No to weak reaction with HCl.

15.5 to 17.4 ft CLAYSTONE: Dark brown. Soft (H6) and can be scratched with thumbnail. Moderately weathered (W5) with discoloration and oxidation. No reaction with HCl. FeOx staining present.

17.4 to 23.8 ft SANDSTONE: Fine grained, tan to light brown. Very soft (H7) and can be easily scratched with thumbnail. Intensely weathered (W7) discolored and oxidation throughout. Friable and FeOx staining present. No to weak reaction with HCl.

23.8 to 28.0 ft SANDSTONE: Fine grained and brownish yellow. Moderately soft (H5) and can be grooved with a knife with moderate pressure. Intensely weathered (W7) discolored and oxidation throughout. FeOx staining present. No to weak reaction with HCl.

28.0 to 39.0 ft SANDSTONE: Fine grained, light to dark brown. Moderately soft (H5) and can be grooved with a knife with moderate pressure. Intensely weathered (W7) discolored and oxidation throughout. Friable, easily broken on bedding planes and FeOx staining present. No to weak reaction with HCl. Laminated to moderately bedded. Bedding planes near horizontal. Clay rip-up clasts found from 33.2 to 33.7 ft.

39.0 to 41.0 ft CLAYSTONE: Dark gray. Soft (H6) and can be scratched with thumbnail. Moderately weathered (W5) with discoloration and oxidation. No reaction with HCl.

STRATIGRAPHY:

0.0 to 7.3 ft: QUATERNARY ALLUVIUM (Qal)
7.3 to 41.0 ft: CRETACEOUS MENEFEE FORMATION (Kmf)

COMMENTS:

HSA= hollow stem auger NA= not available ft= feet NE= not encountered NP= non plastic NR= no recovery HCl= hydrochloric acid FeOx= iron oxide CaCOx= calcium carbonate MnOx= manganese oxide SPT= standard penetration test HQ3= coring system SS= sandstone CLSTNE= claystone

The data for the center column and "classification and physical conditions" column are based on Bureau of Reclamation Geology Field Manual and Drawing Titled for designs and specification as follows "Drawing No. 40-D-6493 Standard Descriptions and Descriptive Criteria for rock. Drawing No. 40-D-6499 Standard Descriptors and Descriptive Criteria for Discontinuities.

7-1336-A (1-86)
Bureau of Reclamation

LOG OF TEST PIT NO. TPSTR7-16-1

SHEET 1 OF 1

FEATURE: PUMPING PLANT 4
PROJECT: NAVAJO GALLUP WATER SUPPLY PROJECT
LOCATION: PUMPING PLANT 4
GROUND ELEVATION: 5866.7
COORDINATES: N 1,884,951 E 2,464,253
METHOD OF EXPLORATION: JOHN DEERE 310J BACKHOE
APPROXIMATE DIMENSIONS: 5'X12'X9'
LOGGED BY: J. GILBERT
DEPTH TO WATER: NE DATE: 8/1/2016
DATE EXCAVATED: 8/1/2016

DEPTH	CLASSIFICATION GROUP SYMBOL	CLASSIFICATION AND DESCRIPTION OF MATERIAL (SEE USBR 5000, 5005)	% PLUS 3 in (BY VOLUME) 3 - 5 in	5 - 12 in	PLUS 12 in
	COBBLES AND BOULDERS	0.0 to 9.0 ft COBBLES AND BOULDERS WITH SILTY SAND WITH GRAVELS: TOTAL SAMPLE (BY VOLUME): About 60% 3- to 5-inch hard subrounded to subangular cobbles; about 10% 5- to 12-inch hard, subangular to subrounded cobbles; about 10% plus 12-inch subrounded boulders; remainder minus 3 inch; maximum size, 700 mm. MINUS 3-inch FRACTION (BY MASS): About 50% fine to medium subrounded sand; about 30% hard subrounded gravel; about 20% nonplastic fines; no reaction with HCl. IN-PLACE CONDITION: Dry, tan soil with grey to white sandstone gravels, cobbles and boulders. GEOLOGIC INTERPRETATION: Quaternary Pediment Deposit (Qpd)	60	10	10
9.0 ft (5857.7)					

COMMENTS: Surface vegetation consists of grasses, weeds and brush. Discontinued hole due to limit of equipment. Corrosion sample taken at 8.5 feet.

NE= not encountered NA= not available NP= nonplastic HCl= hydrochloric acid

7-1336-A (1-86)
Bureau of Reclamation

LOG OF TEST PIT NO. TPSTR7-16-2

SHEET 1 OF 1

FEATURE: PUMPING PLANT 4
PROJECT: NAVAJO GALLUP WATER SUPPLY PROJECT
LOCATION: PUMPING PLANT 4
GROUND ELEVATION: 5867.3
COORDINATES: N 18,849,191 E 2,464,104
METHOD OF EXPLORATION: JOHN DEERE 310J BACKHOE
APPROXIMATE DIMENSIONS: 7'X12'X10.5'
LOGGED BY: J. GILBERT
DEPTH TO WATER: NE DATE: 8/1/2016
DATE EXCAVATED: 8/1/2016

DEPTH	CLASSIFICATION GROUP SYMBOL	CLASSIFICATION AND DESCRIPTION OF MATERIAL (SEE USBR 5000, 5005)	% PLUS 3 in (BY VOLUME) 3 - 5 in	5 - 12 in	PLUS 12 in
1, 2	SM (visual) (SM)g (lab classification) In-place Density taken at 1.8 ft 2.7 ft (5864.6)	0.0 to 2.7 ft SILTY SAND: About 80% fine sand; about 20% fines with no plasticity, no dry strength and rapid dilatancy; maximum size, fine sand; weak reaction with HCl. IN-PLACE CONDITION: Dry, brown, moderate cementation and homogeneous. IN-PLACE UNIT WEIGHT AND MOISTURE FROM 1.8 TO 2.5 ft. Total: 95.4 lbs. / cu ft., 2.9%. (78.3% compaction) LAB TEST DATA: 61.5% sand, 22.7% fines, 15.8% gravel, LL= NA, PI= NP, SPG= 2.57 Maximum dry density= 121.9 lbs. / cu ft., optimum water content= 11.0% Laboratory classification is: SILTY SAND WITH GRAVEL GEOLOGIC INTERPRETATION: Quaternary Pediment Deposit (Qpd)			
3	COBBLES AND BOULDERS	2.7 to 10.5 ft: COBBLES AND BOULDERS WITH SILTY SAND WITH GRAVEL : TOTAL SAMPLE (BY VOLUME): About 65% 3- to 5-inch hard subrounded to subangular cobbles; about 20% 5- to 12-inch hard, subangular to subrounded cobbles; about 5% plus 12-inch subrounded boulders; remainder minus 3 inch; maximum size, 700 mm. MINUS 3-inch FRACTION (BY MASS): About 50% fine to medium subrounded sand; about 30% hard subrounded gravel; about 20% nonplastic fines; no reaction with HCl. IN-PLACE CONDITION: Dry, tan soil with grey to white sandstone gravels, cobbles and boulders. GEOLOGIC INTERPRETATION: Quaternary Pediment Deposit (Qpd)	65	20	5
4, 5, 6, 7, 8, 9, 10	10.5 ft (5856.8)				

COMMENTS: Discontinued hole due to limit of equipment. In-place density taken at 1.8 feet.

NE= not encountered NA= not available NP= nonplastic HCl= hydrochloric acid

7-1336-A (1-86)
Bureau of Reclamation

LOG OF TEST PIT NO. TPSTR7-16-3

SHEET 1 OF 1

FEATURE: PUMPING PLANT 4
PROJECT: NAVAJO GALLUP WATER SUPPLY PROJECT
LOCATION: PUMPING PLANT 4
GROUND ELEVATION: 5869.2
COORDINATES: N 1,884,912 E 2,464,109
METHOD OF EXPLORATION: JOHN DEERE 310J BACKHOE
APPROXIMATE DIMENSIONS: 6'X11'X11.1'
LOGGED BY: J. GILBERT
DEPTH TO WATER: NE DATE: 8/1/2016
DATE EXCAVATED: 8/1/2016

DEPTH	CLASSIFICATION GROUP SYMBOL	CLASSIFICATION AND DESCRIPTION OF MATERIAL (SEE USBR 5000, 5005)	% PLUS 3 in (BY VOLUME) 3 - 5 in	5 - 12 in	PLUS 12 in
1	(SM)gc	0.0 to 2.1 ft SILTY SAND WITH GRAVEL AND COBBLES: About 50% hard subrounded gravel; about 30% non plastic fines, rapid dilatancy and no dry strength; about 20% fine sand; trace of cobbles; maximum size, cobble; no reaction with HCl. IN-PLACE CONDITION: Dry, brown, moderate cementation and homogeneous.	tr		
2	2.1 ft (5867.1)				
3	COBBLES AND BOULDERS	GEOLOGIC INTERPRETATION: Quaternary Pediment Deposit (Qpd) 2.1 to 11.1 ft COBBLES AND BOULDERS WITH SILTY GRAVEL WITH SAND: TOTAL SAMPLE (BY VOLUME): About 65% 3- to 5-inch hard subrounded to subangular cobbles; about 15% 5- to 12-inch hard, subangular to subrounded cobbles; about 10% plus 12-inch subrounded boulders; remainder minus 3 inch; maximum size, 700 mm. MINUS 3-inch FRACTION (BY MASS): About 50% hard subrounded gravel; about 30% fine to medium subrounded sand; about 20% nonplastic fines; no reaction with HCl. IN-PLACE CONDITION: Dry, tan soil with grey to white sandstone gravels, cobbles and boulders. GEOLOGIC INTERPRETATION: Quaternary Pediment Deposit (Qpd).	65	15	10
4					
5					
6					
7					
8					
9					
10					
11	11.1 ft (5858.1)				

COMMENTS: Discontinued hole due to limit of equipment and sloughing.

NE= not encountered NA= not available NP= nonplastic HCl= hydrochloric acid

7-1336-A (1-86)
Bureau of Reclamation

LOG OF TEST PIT NO. TPSTR7-16-4

SHEET 1 OF 1

FEATURE: PUMPING PLANT 4
PROJECT: NAVAJO GALLUP WATER SUPPLY PROJECT
LOCATION: PUMPING PLANT 4
GROUND ELEVATION: 5867.9
COORDINATES: N 1,884,771 E 2,464,248
METHOD OF EXPLORATION: JOHN DEERE 310J BACKHOE
APPROXIMATE DIMENSIONS: 6'X11'X11.5'
LOGGED BY: J. GILBERT
DEPTH TO WATER: NE DATE: 8/2/2016
DATE EXCAVATED: 8/2/2016

DEPTH	CLASSIFICATION GROUP SYMBOL	CLASSIFICATION AND DESCRIPTION OF MATERIAL (SEE USBR 5000, 5005)	% PLUS 3 in (BY VOLUME) 3 - 5 in	5 - 12 in	PLUS 12 in
1 2 3 4 5 6 7 8 9 10 11	COBBLES AND BOULDERS	0.0 to 11.5 ft COBBLES AND BOULDERS WITH SILTY GRAVEL WITH SAND : TOTAL SAMPLE (BY VOLUME): About 60% 3- to 5-inch hard subrounded to subangular cobbles; about 20% 5- to 12-inch hard, subangular to subrounded cobbles; about 15% plus 12-inch subrounded boulders; remainder minus 3 inch; maximum size, 1000 mm. MINUS 3-inch FRACTION (BY MASS): About 50% hard subrounded gravel; about 30% fine to medium subrounded sand; about 20% nonplastic fines; no reaction with HCl. IN-PLACE CONDITION: Dry, tan soil with grey to white sandstone gravels, cobbles and boulders. GEOLOGIC INTERPRETATION: Quaternary Pediment Deposit (Qpd)	60	20	15
	11.5 ft (5856.4)				

COMMENTS: Discontinued due to limit of equipment. Corrosion sample taken at 10.0 ft.

NE= not encountered NA= not available NP= nonplastic HCl= hydrochloric acid

7-1336-A (1-86)
Bureau of Reclamation

LOG OF TEST PIT NO. TPSTR7-16-5

SHEET 1 OF 1

FEATURE: PUMPING PLANT 4
PROJECT: NAVAJO GALLUP WATER SUPPLY PROJECT
LOCATION: PUMPING PLANT 4
GROUND ELEVATION: 5867.2
COORDINATES: N 1,884,698 E 2,464,276
METHOD OF EXPLORATION: JOHN DEERE 310J BACKHOE
APPROXIMATE DIMENSIONS: 7'X12'X9.5'
LOGGED BY: J. GILBERT
DEPTH TO WATER: NE DATE: 8/3/2016
DATE EXCAVATED: 8/3/2016

DEPTH	CLASSIFICATION GROUP SYMBOL	CLASSIFICATION AND DESCRIPTION OF MATERIAL (SEE USBR 5000, 5005)	% PLUS 3 in (BY VOLUME) 3 - 5 in	5 - 12 in	PLUS 12 in
1 2 3 4 5 6 7 8 9	COBBLES AND BOULDERS	0.0 to 9.5 ft COBBLES AND BOULDERS WITH SILTY SAND : TOTAL SAMPLE (BY VOLUME): About 60% 3- to 5-inch hard subrounded to subangular cobbles; about 20% 5- to 12-inch hard, subangular to subrounded cobbles; about 15% plus 12-inch subrounded boulders; remainder minus 3 inch; maximum size, 900 mm. MINUS 3-inch FRACTION (BY MASS): About 80% fine sand; about 20% nonplastic fines with rapid dilatancy and no dry strength; no reaction with HCl. IN-PLACE CONDITION: Dry, tan soil with grey to white sandstone gravels, cobbles and boulders. GEOLOGIC INTERPRETATION: Quaternary Pediment Deposit (Qpd)	60	20	15
9.5 ft (5857.7)					

COMMENTS: Discontinued due to limit of equipment and sloughing sidewalls.

NE= not encountered NA= not available NP= nonplastic HCl= hydrochloric acid

7-1336-A (1-86)
Bureau of Reclamation

LOG OF TEST PIT NO. TPSTR7-16-6

SHEET 1 OF 1

FEATURE: PUMPING PLANT 4
PROJECT: NAVAJO GALLUP WATER SUPPLY PROJECT
LOCATION: PUMPING PLANT 4
GROUND ELEVATION: 5860.5
COORDINATES: N 1,885,280 E 2,464,196
METHOD OF EXPLORATION: JOHN DEERE 310J BACKHOE
APPROXIMATE DIMENSIONS: 7'X12'X12'
LOGGED BY: J. GILBERT
DEPTH TO WATER: NE DATE: 8/3/2016
DATE EXCAVATED: 8/3/2016

DEPTH	CLASSIFICATION GROUP SYMBOL	CLASSIFICATION AND DESCRIPTION OF MATERIAL (SEE USBR 5000, 5005)	% PLUS 3 in (BY VOLUME) 3 - 5 in	5 - 12 in	PLUS 12 in
1 2 3 4 5 6 7 8 9 10 11 12	COBBLES AND BOULDERS	0.0 to 12.0 ft COBBLES AND BOULDERS WITH SILTY SAND: TOTAL SAMPLE (BY VOLUME): About 65% 3- to 5-inch hard subrounded to subangular cobbles; about 20% 5- to 12-inch hard, subangular to subrounded cobbles; about 10% plus 12-inch subrounded boulders; remainder minus 3 inch; maximum size, 1000 mm. MINUS 3-inch FRACTION (BY MASS): About 80% fine sand; about 20% nonplastic fines with rapid dilatancy and no dry strength; no reaction with HCl. IN-PLACE CONDITION: Dry, tan soil with grey to white sandstone gravels, cobbles and boulders. GEOLOGIC INTERPRETATION: Quaternary Pediment Deposit (Qpd)	65	20	10
	12.0 ft (5848.5)				

COMMENTS: Discontinued due to limit of equipment.

NE= not encountered NA= not available NP= nonplastic HCl= hydrochloric acid

7-1336-A (1-86)
Bureau of Reclamation

LOG OF TEST PIT NO. TPPP7-16-1

SHEET 1 OF 1

FEATURE: Pumping Plant 7
PROJECT: Navajo Gallup Water Supply Project
LOCATION: Tank Site
GROUND ELEVATION: 6210.6
COORDINATES: N 1,729,491 E 2,454,517
METHOD OF EXPLORATION: Deere 310k Backhoe
APPROXIMATE DIMENSIONS: 8x16x12.0
LOGGED BY: P. Gardner
DEPTH TO WATER: NE DATE: 6/6/2016
DATE EXCAVATED: 6/6/2016

DEPTH	CLASSIFICATION GROUP SYMBOL	CLASSIFICATION AND DESCRIPTION OF MATERIAL (SEE USBR 5000, 5005)	% PLUS 3 in (BY VOLUME) 3 - 5 in	5 - 12 in	PLUS 12 in
1, 2, 3	SC	0.0 to 3.7 ft CLAYEY SAND: About 65% fine sand; about 35% fines with medium plasticity, medium toughnesss, medium dry strength and no dilatancy; maximum size, fine sand; strong reaction with HCl. IN-PLACE CONDITION: Dry, brown, moderate cementation and homogeneous. Calcium carbonate stringers present. GEOLOGIC INTERPRETATION: Quaternary Alluvium (Qal)			
3.7 ft (6206.9)					
4, 5, 6, 7, 8, 9, 10, 11	SANDSTONE	3.7 to 12.0 ft SANDSTONE: Fine grained. Tan and light brown in color. Very soft (H7) easily scratched with thumbnail. Very intensely weathered (W8) to intensely weathered (W7) below 6.0 ft. FeOx and MnOx staining present. Laminated to thinly bedded. No reaction with HCl. Excavated in flat, gravel to cobble size chunks. Calcium carbonate intervals at 4.3, 4.8, 5.5 and 6.8 ft about 1 inch in thickness. GEOLOGIC INTERPRETATION: Cretaceous Menefee Formation (Kmf)			
12.0 ft (6198.6)					

COMMENTS: Surface vegetation consists of grasses and sage brush. Discontinued hole due to refusal on bedrock.

7-1336-A (1-86)
Bureau of Reclamation

LOG OF TEST PIT NO. TPPP7-16-2

SHEET 1 OF 1

FEATURE: Pumping Plant 7
PROJECT: Navajo Gallup Water Supply Project
LOCATION: Tank Site
GROUND ELEVATION: 6211.1
COORDINATES: N 1,729,425 E 2,454,466
METHOD OF EXPLORATION: Deere 310k Backhoe
APPROXIMATE DIMENSIONS: 8x16x9.9
LOGGED BY: P. Gardner
DEPTH TO WATER: NE DATE: 6/6/2016
DATE EXCAVATED: 6/6/2016

DEPTH	CLASSIFICATION GROUP SYMBOL	CLASSIFICATION AND DESCRIPTION OF MATERIAL (SEE USBR 5000, 5005)	% PLUS 3 in (BY VOLUME) 3 - 5 in	5 - 12 in	PLUS 12 in
1, 2, 3	SC	0.0 to 3.8 ft CLAYEY SAND: About 80% fine sand; about 20% fines with medium plasticity, medium toughnesss, medium dry strength and no dilatancy; maximum size, fine sand; strong reaction with HCl. IN-PLACE CONDITION: Dry, brown, moderate cementation and homogeneous. Roots present. GEOLOGIC INTERPRETATION: Quaternary Alluvium (Qal)			
3.8 ft (6207.3)					
4, 5, 6, 7, 8, 9	SANDSTONE	3.8 to 9.9 ft SANDSTONE: Fine grained. Tan and light brown in color. Very soft (H7) easily scratched with thumbnail and intensely weathered (W7). FeOx and MnOx staining present. Laminated to thinly bedded. No reaction with HCl. Excavated in flat, gravel to cobble size chunks. Calcium carbonate intervals at 6.0, 6.5, 7.0 and 7.8 ft about 1 inch in thickness. GEOLOGIC INTERPRETATION: Cretaceous Menefee Formation (Kmf)			
9.9 ft (6201.2)					

COMMENTS: Surface vegetation consists of grasses and sage brush. Discontinued hole due to refusal on bedrock.

7-1336-A (1-86)
Bureau of Reclamation

LOG OF TEST PIT NO. TPPP7-16-3

SHEET 1 OF 1

FEATURE: Pumping Plant 7
PROJECT: Navajo Gallup Water Supply Project
LOCATION: Tank Site
GROUND ELEVATION: 6211.6
COORDINATES: N 1,729,305 E 2,454,387
METHOD OF EXPLORATION: Deere 310k Backhoe
APPROXIMATE DIMENSIONS: 8x16x9.4
LOGGED BY: P. Gardner
DEPTH TO WATER: NE DATE: 6/6/2016
DATE EXCAVATED: 6/6/2016

DEPTH	CLASSIFICATION GROUP SYMBOL	CLASSIFICATION AND DESCRIPTION OF MATERIAL (SEE USBR 5000, 5005)	% PLUS 3 in (BY VOLUME) 3 - 5 in	5 - 12 in	PLUS 12 in
1, 2, 3	SC	0.0 to 3.4 ft CLAYEY SAND: About 60% fine sand; about 40% fines with low plasticity, low toughnesss, low dry strength and no dilatancy; maximum size, fine sand; weak reaction with HCl. IN-PLACE CONDITION: Dry, brown, moderate cementation and homogeneous. Roots present. GEOLOGIC INTERPRETATION: Quaternary Alluvium (Qal)			
3.4 ft (6208.2)					
4, 5, 6, 7, 8, 9	SANDSTONE	3.4 to 9.4 ft SANDSTONE: Fine grained. Tan and light brown in color. Soft (H6), can be scratched with thumbnail and intensely weathered (W7). FeOx and MnOx staining present. Laminated to thinly bedded. No reaction with HCl. Excavated in flat, gravel to cobble size chunks. Calcium carbonate found in joints. GEOLOGIC INTERPRETATION: Cretaceous Menefee Formation (Kmf)			
9.4 ft (6202.2)					

COMMENTS: Surface vegetation consists of grasses and sage brush. Discontinued hole due to refusal on bedrock.

7-1336-A (1-86)
Bureau of Reclamation

LOG OF TEST PIT NO. TPPP7-16-4

SHEET 1 OF 1

FEATURE: Pumping Plant 7
PROJECT: Navajo Gallup Water Supply Project
LOCATION: Pumping Plant
GROUND ELEVATION: 6212.2
COORDINATES: N 1,729,214 E 2,454,378
METHOD OF EXPLORATION: Deere 310k Backhoe
APPROXIMATE DIMENSIONS: 8x16x10.4
LOGGED BY: P. Gardner
DEPTH TO WATER: NE DATE: 6/6/2016
DATE EXCAVATED: 6/6/2016

DEPTH	CLASSIFICATION GROUP SYMBOL	CLASSIFICATION AND DESCRIPTION OF MATERIAL (SEE USBR 5000, 5005)	% PLUS 3 in (BY VOLUME) 3 - 5 in	5 - 12 in	PLUS 12 in
1, 2, 3, 4	SC	0.0 to 4.1 ft CLAYEY SAND: About 70% fine sand; about 30% fines with medium plasticity, medium toughnesss, medium dry strength and no dilatancy; maximum size, fine sand; weak to strong reaction with HCl. IN-PLACE CONDITION: Dry, brown, moderate cementation and homogeneous. Calcium carbonate stringers present. GEOLOGIC INTERPRETATION: Quaternary Alluvium (Qal)			
4.1 ft (6208.1)					
5, 6, 7, 8, 9, 10	SANDSTONE	4.1 to 10.4 ft SANDSTONE: Fine grained. Tan and light brown in color. Soft (H6), can be scratched with thumbnail and intensely weathered (W7). FeOx and MnOx staining present. Laminated to thinly bedded. No reaction with HCl. Excavated in flat, gravel to cobble size chunks. Calcium carbonate found in joints. GEOLOGIC INTERPRETATION: Cretaceous Menefee Formation (Kmf)			
10.4 ft (6201.8)					

COMMENTS: Surface vegetation consists of grasses and brush. Discontinued hole due to refusal on bedrock.

7-1336-A (1-86)
Bureau of Reclamation

LOG OF TEST PIT NO. TPPP7-16-5

SHEET 1 OF 1

FEATURE: Pumping Plant 7
PROJECT: Navajo Gallup Water Supply Project
LOCATION: Pumping Plant
GROUND ELEVATION: 6213.8
COORDINATES: N 1,729,101 E 2,454,289
METHOD OF EXPLORATION: Deere 310k Backhoe
APPROXIMATE DIMENSIONS: 8x16x9.7
LOGGED BY: P. Gardner
DEPTH TO WATER: NE DATE: 6/6/2016
DATE EXCAVATED: 6/6/2016

DEPTH	CLASSIFICATION GROUP SYMBOL	CLASSIFICATION AND DESCRIPTION OF MATERIAL (SEE USBR 5000, 5005)	% PLUS 3 in (BY VOLUME) 3 - 5 in	5 - 12 in	PLUS 12 in
1, 2, 3, 4	SC	0.0 to 4.5 ft CLAYEY SAND: About 65% fine sand; about 35% fines with low plasticity, low toughnesss, low dry strength and no dilatancy; maximum size, fine sand; no reaction with HCl. IN-PLACE CONDITION: Dry, brown, moderate cementation and homogeneous. GEOLOGIC INTERPRETATION: Quaternary Alluvium (Qal)			
4.5 ft (6209.3)					
5, 6, 7, 8, 9	SANDSTONE	4.5 to 9.7 ft SANDSTONE: Fine grained. Tan and light brown in color. Soft (H6), can be scratched with thumbnail and intensely weathered (W7). FeOx and MnOx staining present. Laminated to thinly bedded. No reaction with HCl. Excavated in flat, gravel to cobble size chunks. Calcium carbonate found in joints. GEOLOGIC INTERPRETATION: Cretaceous Menefee Formation (Kmf)			
9.7 ft (6204.1)					

COMMENTS: Surface vegetation consists of grasses and brush. Discontinued hole due to refusal on bedrock.

7-1336-A (1-86)
Bureau of Reclamation

LOG OF TEST PIT NO. TPPP7-16-6

SHEET 1 OF 1

FEATURE: Pumping Plant 7
PROJECT: Navajo Gallup Water Supply Project
LOCATION: Tank Site
GROUND ELEVATION: 6214.0
COORDINATES: N 1,729,563 E 2,454,340
METHOD OF EXPLORATION: Deere 310k Backhoe
APPROXIMATE DIMENSIONS: 8x16x12.2
LOGGED BY: P. Gardner
DEPTH TO WATER: NE DATE: 6/7/2016
DATE EXCAVATED: 6/7/2016

DEPTH	CLASSIFICATION GROUP SYMBOL	CLASSIFICATION AND DESCRIPTION OF MATERIAL (SEE USBR 5000, 5005)	% PLUS 3 in (BY VOLUME) 3 - 5 in	5 - 12 in	PLUS 12 in
1, 2	SM	0.0 to 2.8 ft SILTY SAND: About 75% fine sand; about 25% fines with no plasticity, no dry strength and rapid dilatancy; maximum size, fine sand; weak reaction with HCl. IN-PLACE CONDITION: Dry, brown, moderate cementation and homogeneous. GEOLOGIC INTERPRETATION: Quaternary Alluvium (Qal)			
2.8 ft (6211.2)					
3, 4, 5, 6, 7, 8, 9, 10, 11	s(CL) (lab classification) In-place density taken at 6.0 ft.	2.8 to 12.2 ft SANDY LEAN CLAY: About 60% fines with medium plasticity, medium toughnesss, high dry strength and no dilatancy; about 40% fine sand; maximum size, fine sand; strong reaction with HCl. IN-PLACE CONDITION: Dry, light brown, very hard and blocky. Calcium carbonate stringers and nodules present. IN-PLACE UNIT WEIGHT AND MOISTURE FROM 6.0 ft. Total: 103.2 lbf/ft³, 6.9% (91.7% compaction) LAB TEST DATA: 53.7% fines, 46.3% sand, LL= 25.4 PI= 11.3 SPG= 2.66 Maximum dry density: 112.5 lbf/ft³, optimum water content= 14.5% Laboratory classification is SANDY LEAN CLAY GEOLOGIC INTERPRETATION: Quaternary Alluvium (Qal)			
12	12.2 ft (6201.8)				

COMMENTS: Surface vegetation consists of grasses and brush. Discontinued hole due to limit of equipment.

7-1336-A (1-86)
Bureau of Reclamation

LOG OF TEST PIT NO. TPPP7-16-7

SHEET 1 OF 1

FEATURE: Pumping Plant 7
PROJECT: Navajo Gallup Water Supply Project
LOCATION: Pumping Plant
GROUND ELEVATION: 6214.1
COORDINATES: N 1,729,126 E 2,454,207
METHOD OF EXPLORATION: Deere 310k Backhoe
APPROXIMATE DIMENSIONS: 8x16x10.4
LOGGED BY: P. Gardner
DEPTH TO WATER: NE DATE: 6/7/2016
DATE EXCAVATED: 6/7/2016

DEPTH	CLASSIFICATION GROUP SYMBOL	CLASSIFICATION AND DESCRIPTION OF MATERIAL (SEE USBR 5000, 5005)	% PLUS 3 in (BY VOLUME) 3 - 5 in	5 - 12 in	PLUS 12 in
1, 2, 3	SC	0.0 to 3.5 ft CLAYEY SAND: About 70% fine sand; about 30% fines with low plasticity, low toughnesss, low dry strength and no dilatancy; maximum size, fine sand; strong reaction with HCl. IN-PLACE CONDITION: Dry, brown, moderate cementation and homogeneous. GEOLOGIC INTERPRETATION: Quaternary Alluvium (Qal)			
3.5 ft (6210.6)					
4, 5, 6, 7, 8, 9, 10	SANDSTONE	3.5 to 10.4 ft SANDSTONE: Fine grained. White, light brown, tan and orange in color. Soft (H7) and can be scratched the thumbnail. Decomposed (W9) to intensely weathered (W7). Friable and is excavated in flat, gravel to cobble sized pieces. Laminated to thinly bedded. FeOx staining present. Calcium carbonate intervals throughout the unit. No to strong reaction with HCl. GEOLOGIC INTERPRETATION: Cretaceoous Menefee Formation (Kmf)			
10.4 ft (6203.7)					

COMMENTS: Surface vegetation consists of grasses and brush. Discontinued hole due to refusal on bedrock.

7-1336-A (1-86)
Bureau of Reclamation

LOG OF TEST PIT NO. TPPP7-16-8

SHEET 1 OF 1

FEATURE: Pumping Plant 7
PROJECT: Navajo Gallup Water Supply Project
LOCATION: Pipeline
GROUND ELEVATION: 6215.7
COORDINATES: N 1,728,992 E 2,454,182
METHOD OF EXPLORATION: Deere 310k Backhoe
APPROXIMATE DIMENSIONS: 8x16x10.3
LOGGED BY: P. Gardner
DEPTH TO WATER: NE DATE: 6/7/2016
DATE EXCAVATED: 6/7/2016

DEPTH	CLASSIFICATION GROUP SYMBOL	CLASSIFICATION AND DESCRIPTION OF MATERIAL (SEE USBR 5000, 5005)	% PLUS 3 in (BY VOLUME) 3 - 5 in	5 - 12 in	PLUS 12 in
1, 2, 3	SC 3.4 ft (6212.3)	0.0 to 3.4 ft CLAYEY SAND: About 65% fine sand; about 35% fines with medium plasticity, medium toughnesss, medium dry strength and no dilatancy; maximum size, fine sand; strong reaction with HCl. IN-PLACE CONDITION: Dry, brown, moderate cementation and homogeneous. GEOLOGIC INTERPRETATION: Quaternary Alluvium (Qal)			
4, 5, 6, 7, 8	s(CL) (lab classification) In-place density taken at 7.0 ft 8.7 ft (6207.0)	3.4 to 8.7 ft SANDY LEAN CLAY: About 60% fines with medium plasticity, medium toughnesss, high dry strength and no dilatancy; about 40% fine sand; maximum size, fine sand; weak to strong reaction with HCl. IN-PLACE CONDITION: Dry, brown, gray and orange in color. Mottled and blocky. Very hard. FeOx staining and calcium carbonate present. IN-PLACE UNIT WEIGHT AND MOISTURE FROM 7.0 ft. Total: 113.8 lbf/ft³, 9.7% (107.2% compaction) LAB TEST DATA: 68.5% fines, 31.5% sand, LL= 34.7 PI= 20.5 SPG= 2.69 Maximum dry density: 106.2 lbf/ft³, optimum water content= 17.7% Laboratory classification is SANDY LEAN CLAY GEOLOGIC INTERPRETATION: Quaternary Alluvium (Qal)			
9, 10	SANDSTONE 10.3 ft (6205.4)	8.7 to 10.3 ft SANDSTONE: Fine grained. Tan and light brown in color. Soft (H6), can be scratched with thumbnail and intensely weathered (W7). FeOx staining present. Laminated to thinly bedded. No reaction with HCl. Excavated in flat, gravel to cobble size chunks. Calcium carbonate found in joints. GEOLOGIC INTERPRETATION: Cretaceous Menefee Formation (Kmf)			

COMMENTS: Surface vegetation consists of grasses, weeds and brush. Discontinued hole due to refusal on bedrock.

SUMMARY OF PHYSICAL PROPERTIES TEST RESULTS

PROJECT: Navajo Gallup Water Supply Project **FEATURE:** Pumping Plant 4

IDENTIFICATION			PARTICLE SIZE FRACTIONS IN PERCENT						CONSISTENCY LIMITS			IN-PLACE DENSITY				COMPACTION TESTS			
			FINES																
SAMPLE NUMBER	DEPTH - feet	CLASSIFICATION SYMBOL	SMALLER THAN 0.005mm	0.005 to 0.074mm	SAND #200 (0.074mm) to #4 (4.76mm)	GRAVEL #4 (4.76mm) to 3" (76.2mm)	COBBLES 3" (76.2mm) to 5" (127mm)	OVERSIZE Larger than 5" (127mm)	LIQUID LIMIT - %	PLASTICITY INDEX - %	SHRINKAGE LIMIT - %	DRY DENSITY- pcf	FILL MOISTURE CONTENT- %	SPECIFIC GRAVITY PLUS No. 4	SPECIFIC GRAVITY MINUS No. 4	MAXIMUM DRY DENSITY - pcf	OPTIMUM MOISTURE CONTENT - %	PENETRATION RESISTANCE - psi	D-VALUE - %
DHSTR7-16-1 SPT#1	20.5-22.0	SM	12.6	27.5	59.9	0.0	0.0	0.0	NA	NP	-	-	2.8	-	2.56	-	-	-	-
DHSTR7-16-1 SPT#2	23.0-24.5	SM	10.9	22.7	66.4	0.0	0.0	0.0	NA	NP	-	-	2.8	-	2.58	-	-	-	-
DHSTR7-16-2 SPT#1	13.0-14.5	(CL)s	50.6	29.0	17.8	2.6	0.0	0.0	38.9	22.4	11.4	-	6.8	2.47	2.57	-	-	-	-
DHSTR7-16-3 SPT#1	18.0-19.5	SM	11.2	27.4	54.6	6.8	0.0	0.0	NA	NP	-	-	3.2	2.33	2.61	-	-	-	-
DHSTR7-16-3 SPT#2	20.5-22.0	SM	6.3	13.0	69.8	10.9	0.0	0.0	NA	NP	-	-	2.2	2.36	2.63	-	-	-	-
DHSTR7-16-4 SPT#1	13.0-14.5	(SM)g	6.1	9.6	55.7	28.6	0.0	0.0	NA	NP	-	-	1.5	2.43	2.57	-	-	-	-
DHSTR7-16-4 SPT#2	15.5-17.0	SM	10.7	24.6	63.0	1.7	0.0	0.0	NA	NP	-	-	2.2	2.42	2.59	-	-	-	-
DHSTR7-16-4 SPT#3	18.0-19.5	SM	10.6	14.2	61.9	13.3	0.0	0.0	NA	NP	-	-	2.5	2.43	2.64	-	-	-	-
DHSTR7-16-4 SPT#4	20.5-22.0	SM	9.3	21.2	61.5	8.0	0.0	0.0	NA	NP	-	-	2.7	2.36	2.63	-	-	-	-

NOTE: Numbers in parentheses are metric equivalents of numbers directly above

SUMMARY OF PHYSICAL PROPERTIES TEST RESULTS

PROJECT: Navajo Gallup Water Supply Project **FEATURE: Pumping Plant 4**

IDENTIFICATION			PARTICLE SIZE FRACTIONS IN PERCENT						CONSISTENCY LIMITS			IN-PLACE DENSITY				COMPACTION TESTS			
			FINES																
SAMPLE NUMBER	DEPTH - feet	CLASSIFICATION SYMBOL	SMALLER THAN 0.005mm	0.005 to 0.074mm	SAND #200 (0.074mm) to #4 (4.76mm)	GRAVEL #4 (4.76mm) to 3" (76.2mm)	COBBLES 3" (76.2mm) to 5" (127mm)	OVERSIZE Larger than 5" (127mm)	LIQUID LIMIT - %	PLASTICITY INDEX - %	SHRINKAGE LIMIT - %	DRY DENSITY- pcf	FILL MOISTURE CONTENT- %	SPECIFIC GRAVITY PLUS No. 4	SPECIFIC GRAVITY MINUS No. 4	MAXIMUM DRY DENSITY - pcf	OPTIMUM MOISTURE CONTENT - %	PENETRATION RESISTANCE - psi	D-VALUE - %
DHSTR7-16-7 SPT#1	13.0-14.5	SM	12.5	34.1	53.4	0.0	0.0	0.0	NA	NP	-	-	2.7	-	2.57	-	-	-	-
DHSTR7-16-7 SPT#2	15.5-17.0	s(CL-ML)	23.9	42.3	33.1	0.7	0.0	0.0	22.0	6.1	-	-	3.4	2.56	2.60	-	-	-	-
DHSTR7-16-7 SPT#3	18.0-19.5	(ML)s	24.5	47.6	27.9	0.0	0.0	0.0	20.4	1.8	-	-	3.6	-	2.61	-	-	-	-
DHSTR7-16-8 SPT#1	20.0-1.5	s(CL)	37.5	18.3	40.4	3.8	0.0	0.0	31.0	20.3	-	-	9.0	2.49	2.63	-	-	-	-
DHSTR7-16-9 SPT#1	14.0-15.5	SM	4.1	10.1	73.7	12.1	0.0	0.0	NA	NP	-	-	2.0	2.39	2.59	-	-	-	-
DHSTR7-16-9 SPT#2	19.0-20.5	(GM)s	6.2	13.6	35.0	45.2	0.0	0.0	NA	NP	-	-	2.4	2.46	2.65	-	-	-	-
DHSTR7-16-10 SPT#1	19.0-20.5	SM	10.1	15.7	73.1	1.1	0.0	0.0	NA	NP	-	-	3.7	2.64	2.62	-	-	-	-
DHSTR7-16-10 SPT#2	24.0-25.5	CH	74.8	21.5	3.7	0.0	0.0	0.0	65.8	44.2	4.8	-	17.6	-	2.64	-	-	-	-
DHSTR7-16-12 SPT#1	15.0-16.5	CL	49.0	47.3	3.7	0.0	0.0	0.0	40.9	26.1	12.4	-	8.7	-	2.64	-	-	-	-
DHSTR7-16-12 SPT#2	24.0-25.5	CH	80.1	18.9	1.0	0.0	0.0	0.0	73.0	49.9	4.1	-	16.2	-	2.69	-	-	-	-

NOTE: Numbers in parentheses are metric equivalents of numbers directly above

SUMMARY OF PHYSICAL PROPERTIES TEST RESULTS

PROJECT: Navajo Gallup Water Supply Project **FEATURE:** Pumping Plant 4

IDENTIFICATION			PARTICLE SIZE FRACTIONS IN PERCENT						CONSISTENCY LIMITS			IN-PLACE DENSITY				COMPACTION TESTS			
			FINES																
SAMPLE NUMBER	DEPTH - feet	CLASSIFICATION SYMBOL	SMALLER THAN 0.005mm	0.005 to 0.074mm	SAND #200 (0.074mm) to #4 (4.76mm)	GRAVEL #4 (4.76mm) to 3" (76.2mm)	COBBLES 3" (76.2mm) to 5" (127mm)	OVERSIZE Larger than 5" (127mm)	LIQUID LIMIT - %	PLASTICITY INDEX - %	SHRINKAGE LIMIT - %	DRY DENSITY- pcf	FILL MOISTURE CONTENT- %	SPECIFIC GRAVITY PLUS No. 4	SPECIFIC GRAVITY MINUS No. 4	MAXIMUM DRY DENSITY - pcf	OPTIMUM MOISTURE CONTENT - %	PENETRATION RESISTANCE - psi	D-VALUE - %
DHSTR7-16-13 SPT#1	15.4-16.5	CL	56.4	36.8	6.8	0.0	0.0	0.0	44.2	27.1	7.5	-	10.3	-	2.63	-	-	-	-
DHSTR7-16-13 SPT#2	25.0-26.5	CH	88.5	10.4	1.1	0.0	0.0	0.0	68.8	50.3	7.7	-	18.4	-	2.70	-	-	-	-
DHSTR7-16-13 SPT#3	33.5-35.0	CH	66.4	32.9	0.7	0.0	0.0	0.0	56.5	38.2	8.3	-	13.1	-	2.54	-	-	-	-
DHSTR7-16-14 SPT#1	19.0-20.5	(SM)g	7.3	16.9	54.5	21.3	0.0	0.0	NA	NP	-	-	2.8	2.39	2.66	-	-	-	-
TPSTR7-16-2	1.8-2.5	(SM)g	12.4	10.3	61.5	15.8	0.0	0.0	NA	NP	-	95.4	2.9	2.39	2.57	121.9	11.0	1800	78.3

NOTE: Numbers in parentheses are metric equivalents of numbers directly above

SUMMARY OF PHYSICAL PROPERTIES TEST RESULTS

PROJECT: Navajo Gallup Water Supply Project **FEATURE:** Pumping Plant 7

IDENTIFICATION			PARTICLE SIZE FRACTIONS IN PERCENT						CONSISTENCY LIMITS			IN-PLACE DENSITY				COMPACTION TESTS			
			FINES																
SAMPLE NUMBER	DEPTH - feet	CLASSIFICATION SYMBOL	SMALLER THAN 0.005mm	0.005 to 0.074mm	SAND #200 (0.074mm) to #4 (4.76mm)	GRAVEL #4 (4.76mm) to 3" (76.2mm)	COBBLES 3" (76.2mm) to 5" (127mm)	OVERSIZE Larger than 5" (127mm)	LIQUID LIMIT - %	PLASTICITY INDEX - %	SHRINKAGE LIMIT - %	DRY DENSITY- pcf	FILL MOISTURE CONTENT- %	SPECIFIC GRAVITY PLUS No. 4	SPECIFIC GRAVITY MINUS No. 4	MAXIMUM DRY DENSITY - pcf	OPTIMUM MOISTURE CONTENT - %	PENETRATION RESISTANCE - psi	D-VALUE - %
DHPP-7-16-1 SPT#1	3.5-5.0	SC-SM	24.4	14.5	61.1	0.0	0.0	0.0	22.2	4.5	-	-	5.0	-	2.61	-	-	-	-
DHPP7-16-2 SPT#1	4.0-5.5	SC-SM	22.0	6.8	71.2	0.0	0.0	0.0	24.0	6.2	-	-	5.1	-	2.63	-	-	-	-
DHPP7-16-3 SPT#1	3.5-5.0	SM	18.9	8.1	73.0	0.0	0.0	0.0	NA	NP	-	-	3.8	-	2.59	-	-	-	-
DHPP7-16-3 SPT#2	8.5-10.0	SM	11.0	9.9	79.1	0.0	0.0	0.0	NA	NP	-	-	3.3	-	2.58	-	-	-	-
DHPP7-16-4 SPT#1	4.0-5.5	s(CL)	34.8	18.1	47.1	0.0	0.0	0.0	29.6	15.1	-	-	6.5	-	2.65	-	-	-	-
DHPP7-16-5 SPT #1	3.0-4.5	SM	12.7	5.5	81.8	0.0	0.0	0.0	NA	NP	-	-	2.8	-	2.61	-	-	-	-
DHPP7-16-5 SPT #2	8.0-9.5	SM	19.9	13.5	66.6	0.0	0.0	0.0	NA	NP	-	-	7.5	-	2.64	-	-	-	-

NOTE: Numbers in parentheses are metric equivalents of numbers directly above

SUMMARY OF PHYSICAL PROPERTIES TEST RESULTS

PROJECT: Navajo Gallup Water Supply Project **FEATURE: Pumping Plant 7**

IDENTIFICATION			PARTICLE SIZE FRACTIONS IN PERCENT						CONSISTENCY LIMITS			IN-PLACE DENSITY				COMPACTION TESTS			
			FINES																
SAMPLE NUMBER	DEPTH - feet	CLASSIFICATION SYMBOL	SMALLER THAN 0.005mm	0.005 to 0.074mm	SAND #200 (0.074mm) to #4 (4.76mm)	GRAVEL #4 (4.76mm) to 3" (76.2mm)	COBBLES 3" (76.2mm) to 5" (127mm)	OVERSIZE Larger than 5" (127mm)	LIQUID LIMIT - %	PLASTICITY INDEX - %	SHRINKAGE LIMIT - %	DRY DENSITY- pcf	FILL MOISTURE CONTENT- %	SPECIFIC GRAVITY PLUS No. 4	SPECIFIC GRAVITY MINUS No. 4	MAXIMUM DRY DENSITY - pcf	OPTIMUM MOISTURE CONTENT - %	PENETRATION RESISTANCE - psi	D-VALUE - %
DHPP7-16-6 SPT #1	3.0-4.5	SM	20.3	8.5	71.2	0.0	0.0	0.0	NA	NP	-	-	4.6	-	2.60	-	-	-	-
DHPP7-16-6 SPT #2	5.5-7.0	SM	15.0	7.9	77.1	0.0	0.0	0.0	NA	NP	-	-	4.1	-	2.60	-	-	-	-
DHPP7-16-6 SPT #3	10.5-12.0	SM	13.8	11.7	74.5	0.0	0.0	0.0	NA	NP	-	-	5.3	-	2.66	-	-	-	-
DHPP7-16-6 SPT #4	13.0-14.5	SM	15.2	13.3	71.5	0.0	0.0	0.0	NA	NP	-	-	6.4	-	2.63	-	-	-	-
DHPP7-16-6 SPT #5	18.0-19.5	SM	15.5	11.3	73.2	0.0	0.0	0.0	NA	NP	-	-	8.6	-	2.63	-	-	-	-
DHPP7-16-7 SPT #1	3.0-4.5	s(CL)	33.2	22.6	44.2	0.0	0.0	0.0	30.0	15.5	-	-	7.9	-	2.62	-	-	-	-
DHPP7-16-8 SPT #1	3.0-4.5	SM	21.4	17.1	61.5	0.0	0.0	0.0	NA	NP	-	-	4.7	-	2.54	-	-	-	-
DHPP7-16-9 SPT #1	3.0-4.5	s(CL)	28.1	24.8	47.1	0.0	0.0	0.0	28.3	14.7	-	-	4.9	-	2.61	-	-	-	-
DHPP7-16-9 SPT #2	8.0-9.5	SM	14.1	17.2	68.7	0.0	0.0	0.0	NA	NP	-	-	6.3	-	2.58	-	-	-	-
DHPP7-16-10 SPT #1	3.0-4.5	SC-SM	23.0	13.3	63.7	0.0	0.0	0.0	24.4	6.6	-	-	4.7	-	2.63	-	-	-	-

NOTE: Numbers in parentheses are metric equivalents of numbers directly above

SUMMARY OF PHYSICAL PROPERTIES TEST RESULTS

PROJECT: Navajo Gallup Water Supply Project **FEATURE:** Pumping Plant 7

IDENTIFICATION			PARTICLE SIZE FRACTIONS IN PERCENT						CONSISTENCY LIMITS			IN-PLACE DENSITY				COMPACTION TESTS			
			FINES																
SAMPLE NUMBER	DEPTH - feet	CLASSIFICATION SYMBOL	SMALLER THAN 0.005mm	0.005 to 0.074mm	SAND #200 (0.074mm) to #4 (4.76mm)	GRAVEL #4 (4.76mm) to 3" (76.2mm)	COBBLES 3" (76.2mm) to 5" (127mm)	OVERSIZE Larger than 5" (127mm)	LIQUID LIMIT - %	PLASTICITY INDEX - %	SHRINKAGE LIMIT - %	DRY DENSITY- pcf	FILL MOISTURE CONTENT- %	SPECIFIC GRAVITY PLUS No. 4	SPECIFIC GRAVITY MINUS No. 4	MAXIMUM DRY DENSITY - pcf	OPTIMUM MOISTURE CONTENT - %	PENETRATION RESISTANCE - psi	D-VALUE - %
DHPP7-16-11 SPT #1	3.0-4.5	SC-SM	25.3	14.2	60.5	0.0	0.0	0.0	23.5	5.9	-	-	5.1	-	2.63	-	-	-	-
DHPP7-16-11 SPT #2	8.0-9.5	SC-SM	22.9	22.8	54.3	0.0	0.0	0.0	24.7	6.3	-	-	5.6	-	2.63	-	-	-	-
DHPP7-16-11 SPT #3	15.5-17.4	CL	51.2	36.1	12.7	0.0	0.0	0.0	40.1	19.9	16.2	-	16.2	-	2.67	-	-	-	-
TPPP7-16-6	6.0	s(CL)	29.2	24.5	46.3	0.0	0.0	0.0	25.4	11.3	-	103.2	6.9	-	2.66	112.5	14.5	560	91.7
TPPP7-16-8	7.0	s(CL)	38.3	30.2	31.5	0.0	0.0	0.0	34.7	20.5	-	113.8	9.7	-	2.69	106.2	17.7	550	107.2

NOTE: Numbers in parentheses are metric equivalents of numbers directly above