THOREAU BACA WELL CONNECTION

CONSTRUCTION PLANS

McKINLEY COUNTY, NEW MEXICO

FINAL DESIGN FOR REVIEW

March 21

PROJECT DESCRIPTION:
CONSTRUCTION OF APPROXIMATELY 2,600 L.F. OF 4" PVC WATER LINE, AN ACCESS DRIVE AND A WELL PUMP HOUSE WITH ASSOCIATED SITE PIPING

DRAWING INDEX

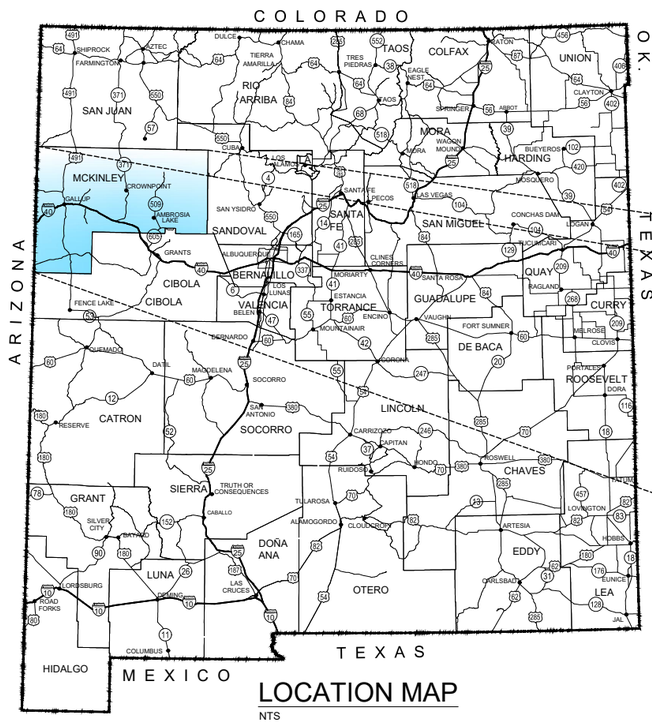

LOCATION MAP
NTS

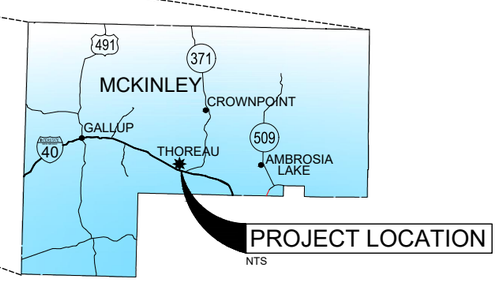

VICINITY MAP
NTS

Know what's **below.**
Call before you dig.

THESE DETAILED PLANS AND SPECIFICATIONS WERE PREPARED UNDER MY DIRECTION AND SUPERVISION ON BEHALF OF SOUDER, MILLER & ASSOCIATES.

TORY TADANO, P.E. DATE
PROJECT MANAGER

THE SEAL AND SIGNATURE OF THE PROFESSIONAL REGISTRANT IDENTIFIED ON THIS COVER SHEET DOES NOT SUGGEST RESPONSIBLE CHARGE FOR ALL SHEETS CONTAINED WITHIN THIS PACKAGE; PLAN SHEETS NOT SIGNED AND SEALED ARE NOT THE RESPONSIBILITY OF THE PROFESSIONAL REGISTRANT IDENTIFIED ON THIS COVER SHEET. PLEASE REFER TO PROFESSIONAL REGISTRANTS IDENTIFIED ON INDIVIDUAL PLAN SHEETS.

Rev #	Date	Description	By	Ckk'd

SOUDER, MILLER & ASSOCIATES
Engineering • Environmental • Geomatics
Serving the Southwest & Rocky Mountains
5454 Venice Avenue NE, Suite D
Albuquerque, NM 87113
Phone (505) 294-0942 Toll-Free (877) 294-0942 Fax (505) 293-3430
www.soudermiller.com

THE NAVAJO NATION
McKINLEY COUNTY, NEW MEXICO
THOREAU BACA WELL CONNECTION
SECTION 19, T. 14 N., R. 13 W.
COVER AND DRAWING INDEX

FINAL DESIGN FOR REVIEW

THIS DRAWING IS INCOMPLETE AND NOT TO BE USED FOR CONSTRUCTION UNLESS IT IS STAMPED, SIGNED AND DATED

Designed	Drawn	Checked
TTT	AAV	JMG

Date: March 2021
Scale: Horiz: N/A Vert: N/A
Project No: 6922883
Sheet: G-1

P:\6-Baca-Prewitt (6922883)\Baca Thoreau Well Connection\CAD\DWG\6922883-Thoreau Well Conn Cover.dwg
3/4/2021 1:54:37 PM aav

GENERAL NOTES

1. THE ENGINEER WAIVES ANY AND ALL RESPONSIBILITY AND IS NOT LIABLE FOR PROBLEMS THAT MAY ARISE FROM CONTRACTOR'S FAILURE TO FOLLOW THESE DRAWINGS, SPECIFICATIONS, AND THE DESIGN INTENT THEY CONVEY, OR FOR PROBLEMS ARISING FROM FAILURE TO OBTAIN AND/OR FOLLOW THE ENGINEER'S GUIDANCE WITH RESPECT TO ANY ERRORS, OMISSIONS, INCONSISTENCIES, AMBIGUITIES, OR CONFLICTS.

2. IT IS THE RESPONSIBILITY OF THE CONTRACTOR TO FAMILIARIZE HIMSELF WITH THE LOCATION OF ALL UTILITIES LOCATED WITHIN THE LIMITS OF CONSTRUCTION. THE GENERAL LOCATION OF KNOWN EXISTING UTILITIES HAS BEEN SHOWN ON THE CONSTRUCTION DRAWINGS TO INDICATE THAT CAUTION MUST BE EXERCISED WHEN WORKING IN THESE AREAS. IN MANY CASES THE EXACT LOCATION OF THE FACILITIES IS NOT KNOWN. THE CONTRACTOR SHALL BE RESPONSIBLE FOR LOCATING AND PROTECTING ALL OVERHEAD AND UNDERGROUND UTILITIES WITHIN THE VICINITY OF THE NEW CONSTRUCTION. PRIOR TO THE START OF CONSTRUCTION, THE CONTRACTOR, WORKING WITH THE RESPECTIVE UTILITY COMPANIES, SHALL ACCURATELY LOCATE AND MARK ALL BURIED FACILITIES, INCLUDING SERVICE LINES. ALL EQUIPMENT LABOR, ETC. NECESSARY TO PROPERLY LOCATE THE EXISTING UTILITIES SHALL BE FURNISHED BY THE CONTRACTOR, THE COST OF WHICH SHALL BE INCIDENTAL TO THE WORK.

3. CONTRACTOR SHALL REPAIR ANY EXISTING STRUCTURE OR UTILITY PIPELINE DAMAGED DURING THE EXECUTION OF THE PROJECT, AT NO ADDITIONAL COSTS TO THE OWNER.

4. CONTRACTOR IS SOLELY RESPONSIBLE FOR CONSTRUCTING THE PROJECT ACCORDING TO CURRENT NEW MEXICO STANDARD SPECIFICATIONS FOR PUBLIC WORKS CONSTRUCTION (NMSSPWC) AWWA SPECS AND NAVAJO NATION / NTUA STANDARDS, INCLUDING WHERE PARTICULAR WORK ITEMS ARE NOT SPECIFIED HEREIN.

5. CONTRACTOR SHALL COMPLY WITH ALL REQUIREMENTS AS SET FORTH IN THE TECHNICAL SPECIFICATIONS AND CONTRACT DOCUMENTS. IT SHALL BE THE RESPONSIBILITY OF THE CONTRACTOR TO CONTACT THE ENGINEER REGARDING ANY QUESTION ARISING FROM ANY ASPECT OF THIS PROJECT NOT SPECIFICALLY COVERED IN THE PLANS AND TECHNICAL SPECIFICATIONS, OR ANY CHANGES OR CORRECTIONS TO THE PLANS AND SPECS.

6. THESE DRAWINGS DO NOT INCLUDE NECESSARY COMPONENTS FOR CONSTRUCTION SAFETY, WHICH SHALL REMAIN WHOLLY THE RESPONSIBILITY OF THE CONTRACTOR. ALL WORK ON THIS PROJECT SHALL BE PERFORMED IN ACCORDANCE WITH APPLICABLE FEDERAL (OSHA), STATE, TRIBAL AND LOCAL LAWS, RULES AND REGULATIONS CONCERNING SAFETY AND HEALTH. ALL EXCAVATION, TRENCHING AND SHORING ACTIVITIES MUST BE CARRIED OUT IN ACCORDANCE WITH OSHA 29 CFR 1926, SUBPART P - EXCAVATIONS.

7. CONTRACTOR SHALL PROVIDE INGRESS AND EGRESS TO ANY LOCAL BUSINESSES AND RESIDENTS AS REQUIRED FOR THE DURATION OF THE PROJECT. THE CONTRACTOR SHALL ADVISE OF AND SCHEDULE ACCESS CLOSURES AT LEAST 24 HOURS IN ADVANCE WITH PROPERTY OWNERS AND THE ENGINEER.

8. THE DRAWINGS CONTAIN SPECIFIC EROSION CONTROL FEATURES DESIGNED BY THE ENGINEER TO PROTECT PROJECT FACILITIES FROM EROSION. THESE FEATURES ARE NOT DESIGNED TO PREVENT POLLUTION OF WATERWAYS DUE TO SEDIMENT. THE CONTRACTOR IS WHOLLY RESPONSIBLE TO PROVIDE A STORM WATER POLLUTION PREVENTION PLAN (SWPPP) AND IMPLEMENT THE BEST MANAGEMENT PRACTICES (BMPs) REQUIRED THEREIN, IN ADDITION TO THE FEATURES SHOWN ON THE DRAWINGS. ALL BID ITEMS REFERRING TO SPECIFIC EROSION CONTROL FEATURES, SUCH AS RIPRAP OR ROCK DAMS, ARE APPLICABLE ONLY TO FEATURES DESIGNED BY THE ENGINEER. A SEPARATE BID ITEM(S) IS PROVIDED FOR PREPARATION AND IMPLEMENTATION OF THE CONTRACTOR'S SWPPP.

9. ALL AREAS DISTURBED BY THE CONSTRUCTION ACTIVITIES OF THIS PROJECT SHALL BE RESTORED AND RE-GRADED IN A MANNER ACCEPTABLE TO THE OWNER, ENGINEER, AND LAND OWNER. ALL DISTURBED AREAS SHALL BE RE-SEEDED PER THE CONTRACT DOCUMENTS.

10. ALL PRESSURE RATINGS GIVEN HEREIN FOR PIPES, VALVES, FITTINGS AND OTHER COMPONENTS REFER TO COLD WATER WORKING PRESSURE RATING, UNLESS OTHERWISE NOTED.

11. CLEARANCES AT WATERLINE CROSSINGS ON PLAN AND PROFILE SHEETS CALLED OUT AS "MIN CLR" REFER TO MINIMUM CLEARANCE FROM EXISTING GASLINES AND WATERLINES TO WATERLINE.

12. ALL ELECTRICAL AND SCADA WORK DETAILED ON THESE PLANS TO BE PERFORMED UNDER CONTRACT SHALL, EXCEPT AS OTHERWISE STATED OR PROVIDED FOR, BE CONSTRUCTED IN ACCORDANCE WITH NAVAJO AREA INDIAN HEALTH SERVICE TECHNICAL PROVISIONS MOTOR CONTROL CENTER AND TANK CONTROL PANEL, MOST RECENT REVISION, REFERENCED WITHIN AS STANDARD SPECIFICATIONS.

13. ALL SCALES ARE BASED ON 11" x 17" SHEET SIZE.

CONTACT INFORMATION:

NAVAJO NATION WATER MANAGEMENT BRANCH (OWNER):

JASON JOHN (928) 729-4004

SOUDER, MILLER & ASSOCIATES (ENGINEER):

TORY TADANO, P.E (OFFICE) (505) 299-0942 (CELL) (505) 215-2807

NAVAJO TRIBAL UTILITY AUTHORITY (NTUA):

HEADQUARTERS (800) 528-5011

ABBREVIATIONS

AASHTO	AMERICAN ASSOCIATION OF STATE HIGHWAY AND TRANSPORTATION OFFICIALS
A.C.	ASPHALTIC CONCRETE
ACI	AMERICAN CONCRETE INSTITUTE
AC.	ACRE
AC-FT.	ACRE FEET
AISC	AMERICAN INSTITUTE OF STEEL CONSTRUCTION
ALIGN.	ALIGNMENT
ALUM	ALUMINUM
AMSL	ABOVE MEAN SEA LEVEL
ANSI	AMERICAN NATIONAL STANDARDS INSTITUTE
APPROX.	APPROXIMATE
ARV	AIR RELEASE VALVE
ASTM	AMERICAN SOCIETY FOR TESTING AND MATERIALS
AWG	AMERICAN WIRE GAUGE
AWWA	AMERICAN WATER WORKS ASSOCIATION
BFV	BUTTERFLY VALVE
BIA	BUREAU OF INDIAN AFFAIRS
B.G.S.	BELOW GROUND SURFACE
BLDG	BUILDING
BLM	BUREAU OF LAND MANAGEMENT
BV	BALL VALVE
BVCE	BEGIN VERTICAL CURVE ELEVATION
BVCS	BEGIN VERTICAL CURVE STATION
CL	CENTERLINE
CFS	CUBIC FEET PER SECOND
CI	CAST IRON
CLR.	CLEARANCE
CMP	CORRUGATED METAL PIPE
COMM.	COMMUNICATION
CONC.	CONCRETE
CONST.	CONSTRUCTION
CONT.	CONTINUOUS
CONT.	CONTINUED
COR.	CORNER
COUP.	COUPLING
CP	CONTROL POINT
CTR	CENTER
CU	CUBIC
CY	CUBIC YARD
DI	DUCTILE IRON
DIA	DIAMETER
DIMS	DIMENSIONS
DR	DIMENSION RATIO
DW	DRIVEWAY
E	EAST
E	EASTING
EA.	EACH
ED.	EDITION
EG	EXISTING GRADE
ELEC.	ELECTRICAL
EL., ELEV.	ELEVATION
EOP	EDGE OF PAVEMENT
EQ.	EQUAL
ESMT.	EASEMENT
EVCE	END VERTICAL CURVE ELEVATION
EVCS	END VERTICAL CURVE STATION
EX, EXIST.	EXISTING
FBE	FUSION BONDED EPOXY
FF	FINISHED FLOOR
FFE	FINISHED FLOOR ELEVATION
FG	FINISHED GRADE
FIG.	FIGURE
FL	FLANGE
FND.	FOUND
FNPT	FEMALE NATIONAL PIPE THREAD
FRP	FIBER REINFORCED PLASTIC
FT.	FEET
FV	FLUSH VALVE
GA.	GAUGE
GALV.	GALVANIZED
GI	GALVANIZED IRON
GPM	GALLONS PER MINUTE
GV	GATE VALVE
HDD	HORIZONTAL DIRECTIONAL DRILLING
HDPE	HIGH DENSITY POLYETHYLENE
HORIZ.	HORIZONTAL
HP	HORSEPOWER
HT	HEIGHT
HWY	HIGHWAY
I.A.	INDIAN ALLOTMENT
I.D.	INNER DIAMETER
I.E.	THAT IS, FOR EXAMPLE
IN.	INCH
INV	INVERT
IPS	IRON PIPE SIZE
KSI	KILO POUNDS PER SQUARE INCH
LAT	LATITUDE
L, LEN	LENGTH
LF	LINEAR FEET
LT	LEFT
LONG	LONGITUDE
LVC	LENGTH VERTICAL CURVE
MANUF	MANUFACTURER
MAX.	MAXIMUM
MIL	ONE THOUSANDTHS OF AN INCH
MIN.	MINIMUM
M.J.	MECHANICAL JOINT
MNPT	MALE NATIONAL PIPE THREAD
M.S.L.	MEAN SEA LEVEL
N	NORTH
N	NORTHING
NEC	NATIONAL ELECTRICAL CODE
NG	NATURAL GAS
NM	NEW MEXICO
NMDOT	NEW MEXICO DEPARTMENT OF TRANSPORTATION
NMED	NEW MEXICO ENVIRONMENT DEPARTMENT
NN	NAVAJO NATION
NO.	NUMBER
NPT	NATIONAL PIPE THREAD
NTS	NOT TO SCALE
OAE	OR APPROVED EQUAL
O.C.	ON CENTER
O.C.E.W.	ON CENTER EACH WAY
O.D.	OUTER DIAMETER
OHE	OVERHEAD ELECTRICAL
PE	PLAIN END
P.G.P.	PER GRADING PLAN
PI	POINT OF INFLECTION
PRV	PRESSURE REDUCING VALVE
PSF	POUNDS PER SQUARE FOOT
PSI	POUNDS PER SQUARE INCH
PVC	POLYVINYL CHLORIDE
PVI	POINT VERTICAL INFLECTION
PVT	PRIVATE
Q	FLOW
QTY.	QUANTITY
R	RADIUS
R-	RANGE
REF	REFERENCE
RO	ROUGH OPENING
ROW	RIGHT OF WAY
RT	RIGHT
S	SOUTH
SCH	SCHEDULE
SDR	STANDARD DIMENSION RATIO
SEC.	SECTION
SF	SAFETY FACTOR
SHT	SHEET
SPECS.	SPECIFICATIONS
SS	STAINLESS STEEL
STA	STATION
STD.	STANDARD
SW	SIDEWALK
T	TOWNSHIP
TBD	TO BE DETERMINED
TDH	TOTAL DYNAMIC HEAD
TELE.	TELEPHONE
TEMP.	TEMPORARY
THK	THICK
TNT	NAVAJO TRIBAL TRUST
T.O.	TOP OF
TOC	TOP OF CONCRETE
TRANS	TRANSFORMER
TW	TOP OF WALL
TYP	TYPICAL
UGE	UNDERGROUND ELECTRIC
USGS	UNITED STATES GEOLOGICAL SURVEY
V	VOLUME
VB	VACUUM BREAKER
VERT.	VERTICAL
VLV	VALVE
VR	VACUUM RELIEF
W	WATER
W	WEST
W/	WITH
WL	WATERLINE
WP	WORKING PRESSURE
WT	WALL THICKNESS
WV	WATER VALVE
YDS	YARDS
Z	ZENITH

LEGEND

EXISTING

- WV — WATER VALVE
- PRESSURE REDUCING VALVE
- SANITARY SEWER MANHOLE
- POWER POLE
- GUY ANCHOR
- ELECTRIC METER
- LIGHT POLE
- BOLLARD
- SSCO — SANITARY SEWER CLEAN OUT
- SURVEY CONTROL
- BUILDING
- ROAD EDGE
- 7320 — CONTOUR MAJOR
- 7322 — CONTOUR MINOR
- CULTURALLY SENSITIVE AREA
- FENCE
- FENCE
- OHE — OVERHEAD ELECTRIC
- UGE — UNDERGROUND ELECTRIC
- OHT — OVERHEAD TELEPHONE LINE
- UGT — UNDERGROUND TELEPHONE LINE
- W — WATER LINE
- G — GAS LINE
- WASH

LEGEND

- W — WATER LINE
- FENCE
- OHE — OVERHEAD ELECTRIC
- UGE — UNDERGROUND ELECTRIC
- ACCESS DRIVE
- PIPE CASING
- GATE VALVE
- AIR RELEASE VALVE ASSEMBLY
- GATE
- POWER POLE
- 7320 — CONTOUR MAJOR
- 7322 — CONTOUR MINOR
- RIP RAP
- GRAVEL OVER BASE COURSE
- DIRECTION OF FLOW
- EASEMENT
- MATCH LINE

Rev #	Date	Description	By	Ck'd

SOUDER, MILLER & ASSOCIATES
Engineering • Environmental • Geomatics
Serving the Southwest & Rocky Mountains
5454 Venice Avenue NE, Suite D
Albuquerque, NM 87113
Phone (505) 294-0942 Toll-Free (877) 294-0942 Fax (505) 293-3430
www.soudermiller.com

THE NAVAJO NATION — McKINLEY COUNTY, NEW MEXICO

THOREAU BACA WELL CONNECTION
SECTION 19, T. 14 N., R. 13 W.
GENERAL NOTES AND LEGEND

FINAL DESIGN FOR REVIEW

THIS DRAWING IS INCOMPLETE AND NOT TO BE USED FOR CONSTRUCTION UNLESS IT IS STAMPED, SIGNED AND DATED

Designed	Drawn	Checked
TTT	AAV	JMG

Date: March 2021

Scale: Horiz: N/A Vert: N/A

Project No: 6922883

Sheet: G-2

GRID NORTH

0 500' 1000'

SCALE: 1" = 1000'
US SURVEY FOOT

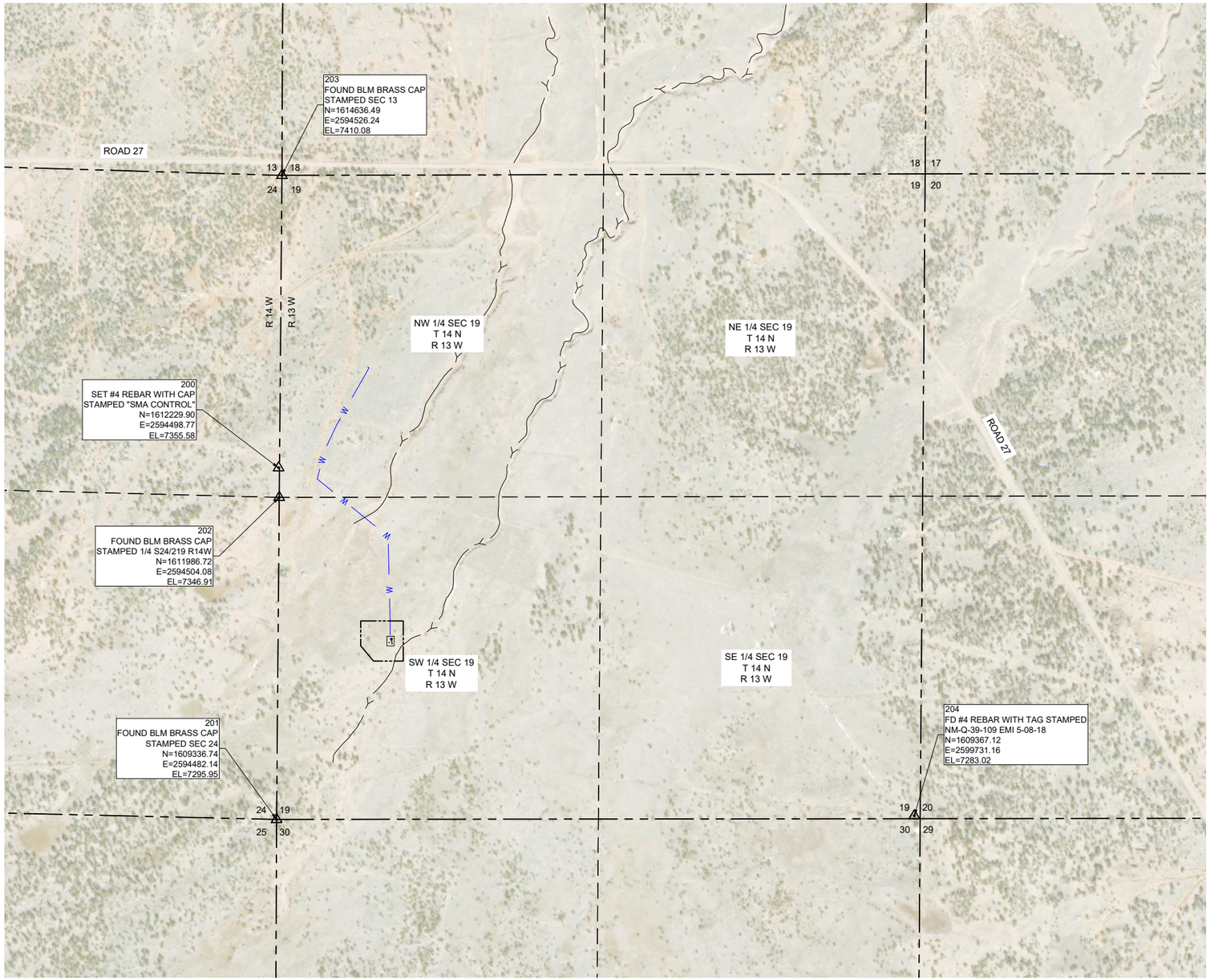

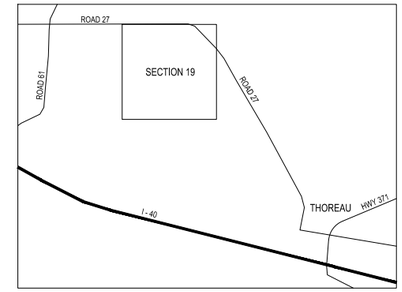

VICINITY MAP
NOT TO SCALE

Point Table				
POINT #	NORTHING	EASTING	ELEVATION	DESCRIPTION
200	1612229.90	2594498.77	7355.58	SET #4 REBAR WITH CAP STAMPED "SMA CONTROL"
201	1609336.74	2594482.14	7295.95	FOUND BLM BRASS CAP STAMPED SEC 24
202	1611986.72	2594504.08	7346.91	FOUND BLM BRASS CAP STAMPED 1/4 S24/219 R14W
203	1614636.49	2594526.24	7410.08	FOUND BLM BRASS CAP STAMPED SEC 13
204	1609367.12	2599731.16	7283.02	FD #4 REBAR WITH TAG STAMPED NM-Q-39-109 EMI 5-08-18

PROJECT COORDINATE SYSTEM INFORMATION

COORDINATE SYSTEM
MODIFIED US STATE PLANE 1983
NEW MEXICO WEST ZONE
ALL DISTANCES ARE GROUND DISTANCES, UNITS ARE US SURVEY FEET
ALL COORDINATES ARE GROUND COORDINATES
GRID TO GROUND SCALE FACTOR= 1.0004123810
SCALED FROM: N35°25'49.27483" W108°15'53.98834" (N= 1612229.903 E= 2594498.769)
VERTICAL DATUM
NAVD 1988
GEOID 12B(CONUS) WAS UTILIZED TO ESTABLISH ORTHO HEIGHTS

METHODS
ALL CONTROL ON THIS PROJECT WAS OBSERVED AND SET ON JUNE 21-22, 2018. ALL POINTS WERE OBSERVED USING TRIMBLE R8 GPS RECEIVERS UTILIZING RTK GPS METHODS.

I, JAMES D. COMBS, NEW MEXICO PROFESSIONAL SURVEYOR NO. 23200, DO HEREBY CERTIFY THAT THIS CONTROL SURVEY REPORT WAS PREPARED BY ME OR UNDER MY DIRECT SUPERVISION BASED ON AN ACTUAL SURVEY ON THE GROUND AS DESCRIBED HEREIN; THAT I AM RESPONSIBLE FOR THIS SURVEY; AND THAT THE SURVEY AND REPORT MEETS THE MINIMUM STANDARDS FOR SURVEYING IN NEW MEXICO.

JAMES DAVID COMBS, N.M.P.S. 23200

JAMES DAVID COMBS NEW MEXICO 23200 PROFESSIONAL SURVEYOR

10/11/18
DATE

Rev #	Date	Description	By	Ck'd

SOUDER, MILLER & ASSOCIATES
Engineering • Environmental • Geomatics
Serving the Southwest & Rocky Mountains
5454 Venice Avenue NE, Suite D
Albuquerque, NM 87113
Phone (505) 294-0942 Toll-Free (877) 294-0942 Fax (505) 293-3430
www.soudermiller.com

THE NAVAJO NATION
McKINLEY COUNTY, NEW MEXICO

THOREAU BACA WELL CONNECTION
SURVEY CONTROL

THIS DRAWING IS INCOMPLETE AND NOT TO BE USED FOR CONSTRUCTION UNLESS IT IS STAMPED, SIGNED AND DATED

Designed	Drawn	Checked
TTT	AAV	JDC

Date: March 2021
Scale: Horiz: 1" = 1000' Vert: N/A
Project No: 6922883
Sheet: C-1

P:\6-Baca-Prewitt (6922883)\Baca Thoreau Well Connection\CAD\DWG\6922883-Thoreau Well Conn Survey Control.dwg
3/4/2021 1:49:16 PM aav

NOTE:
THIS SHEET CONTAINS WORK IN THE VICINITY OF A **"CULTURALLY SENSITIVE AREA"**. ENGINEER MUST BE NOTIFIED AT LEAST FIVE (5) WORKING DAYS PRIOR TO ANY GROUND DISTURBING ACTIVITIES WITHIN 50 FEET OF SENSITIVE AREA.

SITE SPECIFIC REQUIREMENTS INCLUDE:

- TEMPORARY FENCING OF SITE BOUNDARIES BY OWNER-PROVIDED ARCHAEOLOGIST
- NO WORK WITHIN 50 FT. OF CULTURALLY SENSITIVE AREA WITHOUT TEMPORARY FENCING IN PLACE BY ARCHAEOLOGIST
- ON-SITE MONITORING BY OWNER-PROVIDED ARCHAEOLOGIST
- NO GROUND-DISTURBING WORK WITHIN SENSITIVE AREA WITHOUT ARCHAEOLOGIST ONSITE

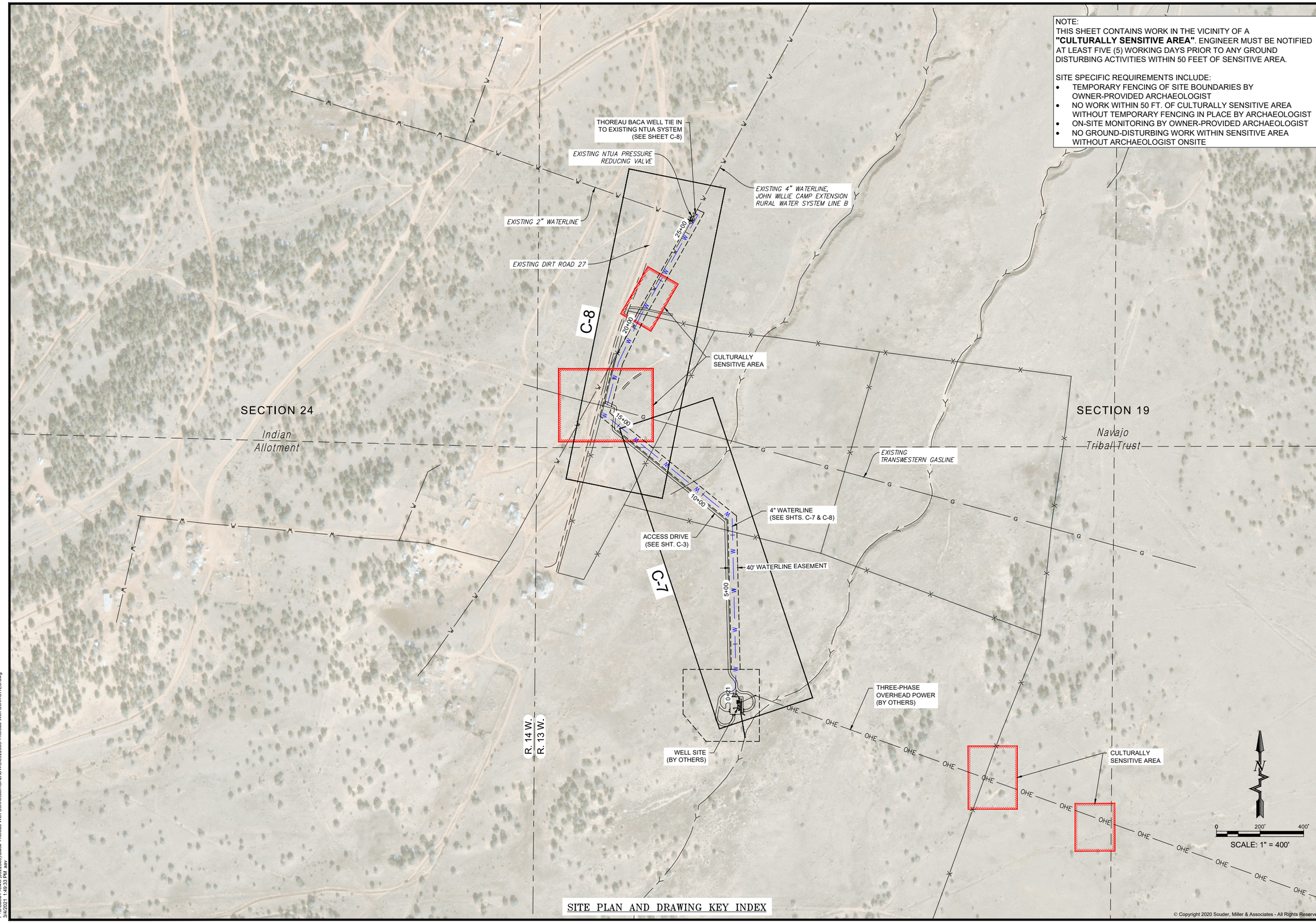

SITE PLAN AND DRAWING KEY INDEX

Rev #	Date	Description	By	Ck'd

SOUDER, MILLER & ASSOCIATES
Engineering • Environmental • Geomatics
Serving the Southwest & Rocky Mountains
5454 Venice Avenue NE, Suite D
Albuquerque, NM 87113
Phone (505) 294-0942 Toll-Free (877) 294-0942 Fax (505) 293-3430
www.soudermiller.com

THE NAVAJO NATION
McKINLEY COUNTY, NEW MEXICO

THOREAU BACA WELL CONNECTION
SECTION 19, T. 14 N., R. 13 W.
SITE PLAN AND DRAWING KEY INDEX

FINAL DESIGN FOR REVIEW

THIS DRAWING IS INCOMPLETE AND NOT TO BE USED FOR CONSTRUCTION UNLESS IT IS STAMPED, SIGNED AND DATED

Designed	Drawn	Checked
TTT	AAV	JMG

Date: March 2021
Scale: Horiz: 1" = 400' Vert: N/A
Project No: 6922883
Sheet: C-2

P:\6-Baca-Prewitt (6922883)\Baca Thoreau Well Connection\CAD\DWG\6922883-Thoreau Well Conn-SITES.dwg
3/4/2021 1:49:33 PM aav

NOTE:
THIS SHEET CONTAINS WORK IN THE VICINITY OF A **"CULTURALLY SENSITIVE AREA"**. ENGINEER MUST BE NOTIFIED AT LEAST FIVE (5) WORKING DAYS PRIOR TO ANY GROUND DISTURBING ACTIVITIES WITHIN 50 FEET OF SENSITIVE AREA.

SITE SPECIFIC REQUIREMENTS INCLUDE:

- TEMPORARY FENCING OF SITE BOUNDARIES BY OWNER-PROVIDED ARCHAEOLOGIST
- NO WORK WITHIN 50 FT. OF CULTURALLY SENSITIVE AREA WITHOUT TEMPORARY FENCING IN PLACE BY ARCHAEOLOGIST
- ON-SITE MONITORING BY OWNER-PROVIDED ARCHAEOLOGIST
- NO GROUND-DISTURBING WORK WITHIN SENSITIVE AREA WITHOUT ARCHAEOLOGIST ONSITE

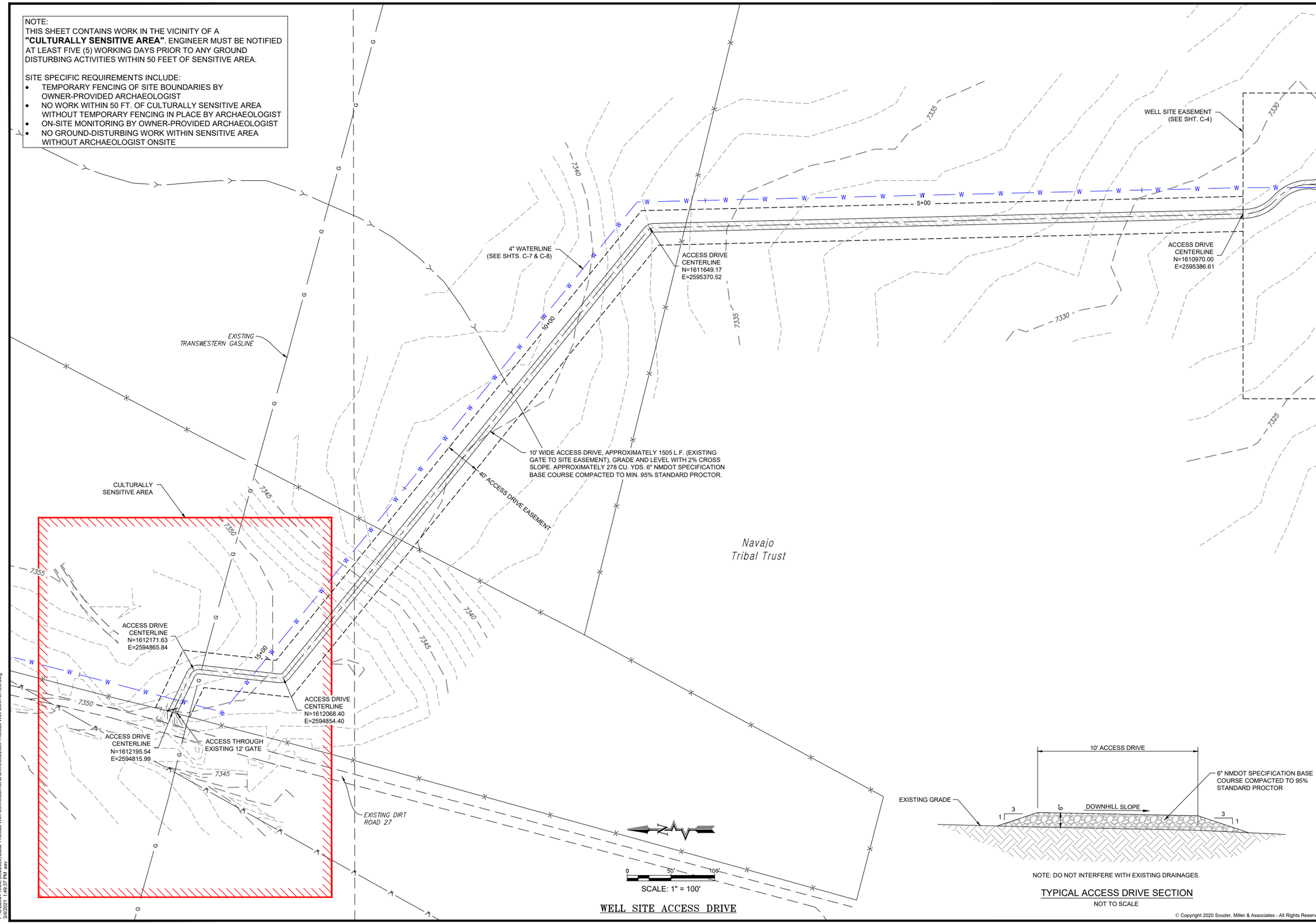

WELL SITE ACCESS DRIVE

NOTE: DO NOT INTERFERE WITH EXISTING DRAINAGES.

TYPICAL ACCESS DRIVE SECTION

NOT TO SCALE

Rev #	Date	Description	By	Chk'd

SOUDER, MILLER & ASSOCIATES
Engineering • Environmental • Geomatics
Serving the Southwest & Rocky Mountains
5454 Venice Avenue NE, Suite D
Albuquerque, NM 87113
Phone (505) 294-0942 Toll-Free (877) 294-0942 Fax (505) 293-3430
www.soudermiller.com

THE NAVAJO NATION
McKINLEY COUNTY, NEW MEXICO

THOREAU BACA WELL CONNECTION
SECTION 19, T. 14 N., R. 13 W.
WELL SITE ACCESS DRIVE

FINAL DESIGN
FOR REVIEW

THIS DRAWING IS INCOMPLETE AND NOT TO BE USED FOR CONSTRUCTION UNLESS IT IS STAMPED, SIGNED AND DATED

Designed	Drawn	Checked
TTT	AAV	JMG

Date: March 2021
Scale: Horiz: 1" = 100'
Vert: N/A
Project No: 6922883
Sheet: C-3

P:\6-Baca-Prewitt (6922883)\Baca Thoreau Well Connection\CAD\DWG\6922883-Thoreau Well Conn-SITES.dwg
3/4/2021 1:49:37 PM aav

CORNER OF ESMT.
N=1610970.00
E=2595175.00

350.0'

CORNER OF ESMT.
N=1610970.00
E=2595525.00

SITE EASEMENT

ACCESS DRIVE CENTERLINE
N=1610970.00
E=2595386.61

ACCESS DRIVE CENTERLINE
N=1610968.18
E=2595386.65

R50

10' WIDE ACCESS DRIVE. GRADE AND LEVEL WITH 2% CROSS SLOPE. APPROX. 95 CU. YDS. 6" NMDOT SPECIFICATION BASE COURSE COMPACTED TO MIN. 95% STANDARD PROCTOR WITHIN SITE EASEMENT.

ACCESS DRIVE CENTERLINE
N=1610934.01
E=2595401.28

ACCESS DRIVE CENTERLINE
N=1610929.70
E=2595405.59

R50

ACCESS DRIVE CENTERLINE
N=1610893.26
E=2595420.24

ACCESS DRIVE CENTERLINE
N=1610863.26
E=2595390.24

ACCESS DRIVE CENTERLINE
N=1610878.52
E=2595416.37

ACCESS DRIVE CENTERLINE
N=1610863.26
E=2595380.24

ACCESS DRIVE CENTERLINE
N=1610863.26
E=2595450.24

ACCESS DRIVE CENTERLINE
N=1610863.26
E=2595460.24

R30

R30

POTENTIAL BORROW AREA FOR FILL MATERIAL AS NEEDED. DO NOT CREATE DEPRESSION OR PONDING AREA.

205.0'

R40

R40

POWER POLE (BY OTHERS)

THREE-PHASE ELECTRIC SERVICE DROP (BY OTHERS)

OHE

ACCESS DRIVE CENTERLINE
N=1610823.26
E=2595340.24

ACCESS DRIVE CENTERLINE
N=1610843.76
E=2595407.24

ACCESS DRIVE CENTERLINE
N=1610822.26
E=2595500.24

330.0'

R40

R40

ACCESS DRIVE CENTERLINE
N=1610781.26
E=2595390.24

ACCESS DRIVE CENTERLINE
N=1610781.26
E=2595450.24

ACCESS DRIVE CENTERLINE
N=1610753.76
E=2595327.24

CORNER OF ESMT.
N=1610765.00
E=2595175.00

SEE SHTS. C-5 & C-6 FOR WELL SITE

ACCESS DRIVE CENTERLINE
N=1610763.76
E=2595407.24

R40

R40

(2x) 4" DRAIN LINES (SLOPE @ 1% TO DAYLIGHT)

ACCESS DRIVE CENTERLINE
N=1610713.76
E=2595367.24

(2x) 4" PVC DR18 PIPE

163.2'

(2x) 4" MJ SHORT SLEEVE, DI 350 psi

(2x) 20 L.F. 4" FL x PE DUCTILE IRON PIPE, 350 psi

(2x) 4" DRAIN LINE OUTFALL
(2x) 4" CAST IRON FLAP VALVES
(SEE SHT. DT-13)
(2x) 4" INVERT = 7325.76
EG = 7324.76
APPROX. N=1610659.17
APPROX. E=2595458.83

SURFACE RIP RAP SPLASH PAD.
(SEE SHT. DT-15)

245.0'

CORNER OF ESMT.
N=1610640.00
E=2595280.00

CORNER OF ESMT.
N=1610640.00
E=2595525.00

N

0 20' 40'

SCALE: 1" = 40'

WELL EASEMENT AND SITE PLAN

P:\8-Baca-Prewitt (6922983)\Baca Thoreau Well Connection\CAD\DWG\6922983-Thoreau Well Conn-SITES.dwg
3/4/2021 1:49:42 PM aav

Rev #	Date	Description	By	Chk'd

SOUDER, MILLER & ASSOCIATES
Engineering • Environmental • Geomatics
Serving the Southwest & Rocky Mountains
5454 Venice Avenue NE, Suite D
Albuquerque, NM 87113
Phone (505) 294-0942 Toll-Free (877) 294-0942 Fax (505) 293-3430
www.soudermiller.com

THE NAVAJO NATION
McKINLEY COUNTY, NEW MEXICO

THOREAU BACA WELL CONNECTION
SECTION 19, T. 14 N., R. 13 W.
WELL EASEMENT AND SITE PLAN

FINAL DESIGN FOR REVIEW

THIS DRAWING IS INCOMPLETE AND NOT TO BE USED FOR CONSTRUCTION UNLESS IT IS STAMPED, SIGNED AND DATED

Designed	Drawn	Checked
TTT	AAV	JMG

Date: March 2021

Scale: Horiz: 1" = 40'
Vert: N/A

Project No: 6922883

Sheet: C-4

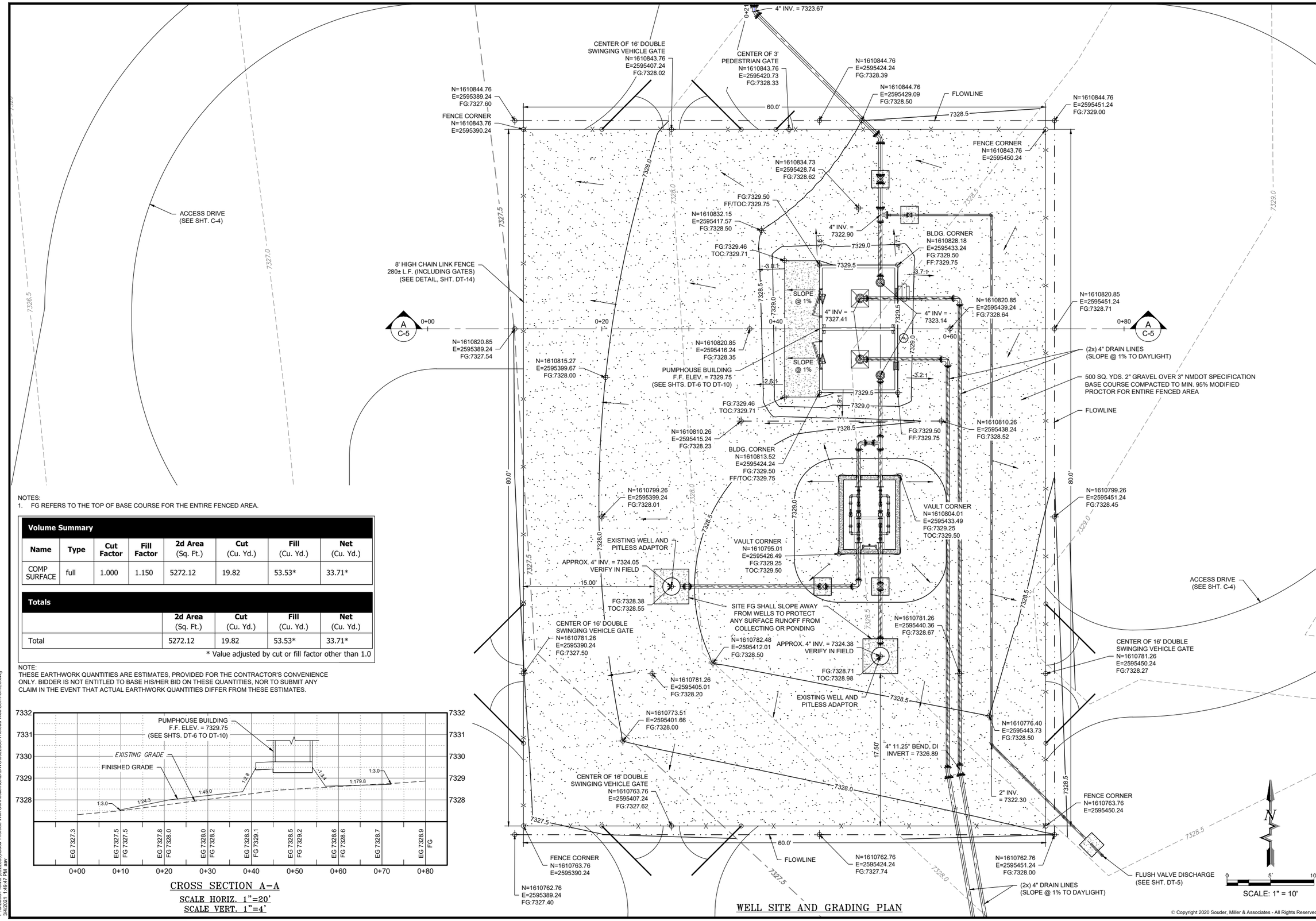

NOTES:
1. FG REFERS TO THE TOP OF BASE COURSE FOR THE ENTIRE FENCED AREA.

Volume Summary

Name	Type	Cut Factor	Fill Factor	2d Area (Sq. Ft.)	Cut (Cu. Yd.)	Fill (Cu. Yd.)	Net (Cu. Yd.)
COMP SURFACE	full	1.000	1.150	5272.12	19.82	53.53*	33.71*

Totals

	2d Area (Sq. Ft.)	Cut (Cu. Yd.)	Fill (Cu. Yd.)	Net (Cu. Yd.)
Total	5272.12	19.82	53.53*	33.71*

* Value adjusted by cut or fill factor other than 1.0

NOTE:
THESE EARTHWORK QUANTITIES ARE ESTIMATES, PROVIDED FOR THE CONTRACTOR'S CONVENIENCE ONLY. BIDDER IS NOT ENTITLED TO BASE HIS/HER BID ON THESE QUANTITIES, NOR TO SUBMIT ANY CLAIM IN THE EVENT THAT ACTUAL EARTHWORK QUANTITIES DIFFER FROM THESE ESTIMATES.

CROSS SECTION A–A
SCALE HORIZ. 1"=20'
SCALE VERT. 1"=4'

Rev #	Date	Description	By	Chk'd

SOUDER, MILLER & ASSOCIATES
Engineering • Environmental • Geomatics
Serving the Southwest & Rocky Mountains
5454 Venice Avenue NE, Suite D
Albuquerque, NM 87113
Phone (505) 294-0942 Toll-Free (877) 294-0942 Fax (505) 293-3430
www.soudermiller.com

THE NAVAJO NATION McKINLEY COUNTY, NEW MEXICO

THOREAU BACA WELL CONNECTION
SECTION 19, T. 14 N., R. 13 W.
WELL SITE AND GRADING PLAN

FINAL DESIGN FOR REVIEW

THIS DRAWING IS INCOMPLETE AND NOT TO BE USED FOR CONSTRUCTION UNLESS IT IS STAMPED, SIGNED AND DATED

Designed	Drawn	Checked
TTT	AAV	JMG

Date: March 2021
Scale: Horiz: AS SHOWN Vert: 1" = 4'
Project No: 6922883
Sheet: C-5

P:\6-Baca-Prewitt (6922883)\Baca Thoreau Well Connection\CAD\DWG\6922883-Thoreau Well Conn-SITES.dwg
3/4/2021 1:49:47 PM aav

KEYED NOTES - THOREAU WELL SITE

Item No.	Description
1	4" MJ x MJ GATE VALVE (SEE DETAIL DT-2) 350 psi
2	4" PVC DR18 C900 PIPE
3	4" DUCTILE IRON PIPE 350 psi
4	4' MJ x MJ TEE, D.I. 350 psi
5	4" MJ x 2" THREADED PLUG, D.I. 350 psi
6	4" MJ x MJ SHORT SLEEVE, D.I. 350 psi
7	4" 90° BEND, D.I. 350 psi
8	4" 45° BEND, D.I. 350 psi
9	4" 11.25° BEND, D.I. 350 psi
10	2" FLUSH VALVE ASSEMBLY (SEE DETAIL DT-5)
11	2" G.I. PIPE, STANDARD WALL, NPT, TAPE COATED BELOW GRADE
12	2" G.I. 90° BEND, NPT, 300 psi
13	2" G.I. 45° BEND, NPT, 300 psi
14	UNDERGROUND ELECTRIC
15	METER VAULT (SEE DETAIL, ####)

NOTES:

1. NO HIGH SPOTS PERMITTED ON SITE PIPING.
2. ALL MATERIALS, FITTINGS AND APPURTENANCES SHALL BE RATED TO AT LEAST 235 psi, UNLESS OTHERWISE NOTED.
3. ALL VALVES SHALL BE LOCATED AT LEAST 5' FROM EDGES OF FOUNDATIONS.
4. ALL BURIED NON-STAINLESS STEEL PIPE AND FITTINGS SHALL BE COLD-APPLIED TAPE-WRAPPED, PER SPECIFICATIONS.
5. ALL BURIED DUCTILE IRON FITTINGS SHALL BE MJ. ALL BURIED DUCTILE IRON PIPES SHALL BE SOLID PIECES. NO DUCTILE IRON PIPE JOINTS ALLOWED.
6. ALL PRESSURE BEARING PIPES WITHIN SITE SHALL BE FULLY RESTRAINED. REFER TO DETAIL, SHEET DT-1.
7. FIELD LOCATE CONDUITS PER REVIEW WITH ELECTRICIAN.

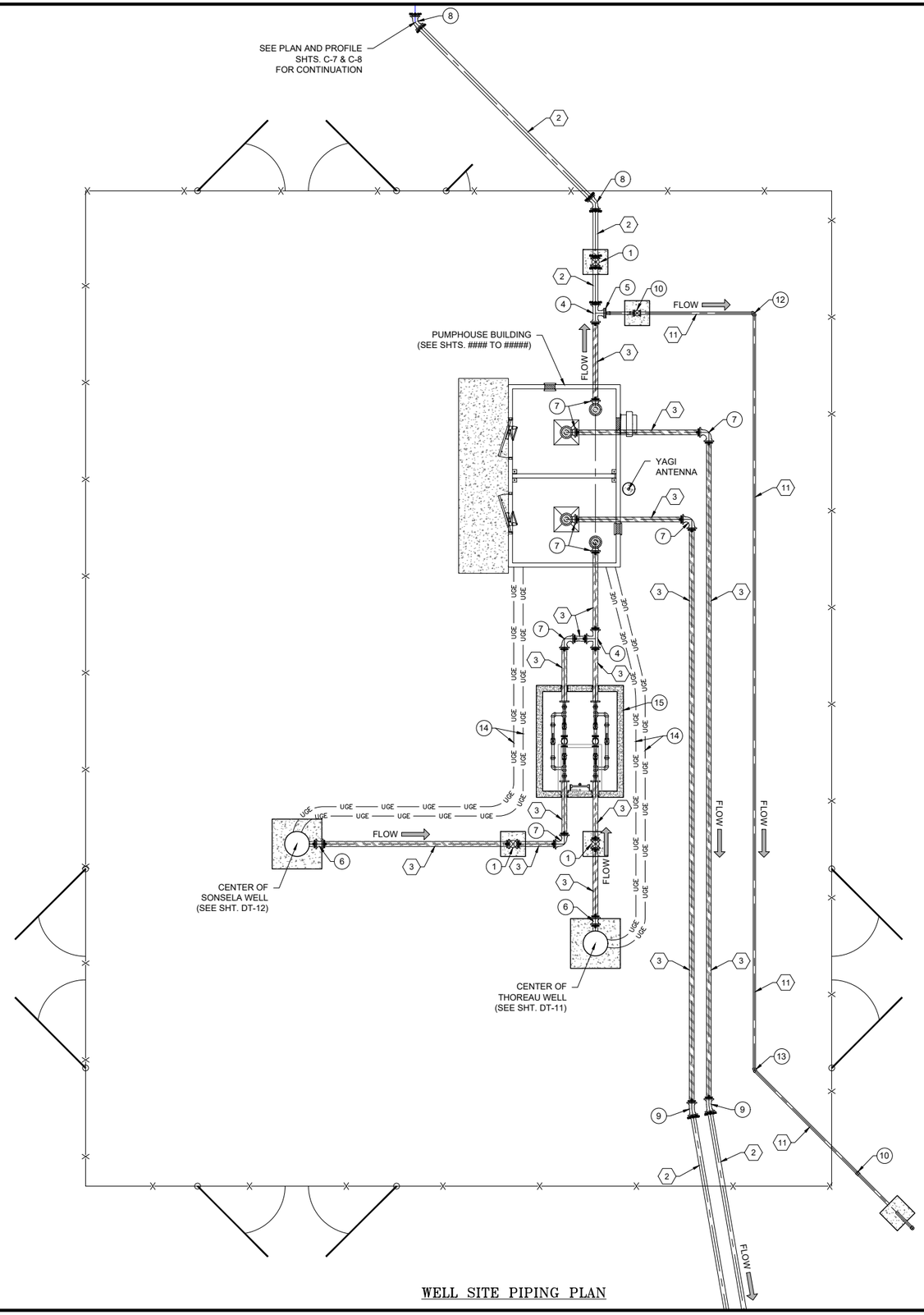

WELL SITE PIPING PLAN

SCALE: 1" = 10'

Rev #	Date	Description	By	Ck'd

SOUDER, MILLER & ASSOCIATES
Engineering • Environmental • Geomatics
Serving the Southwest & Rocky Mountains
5454 Venice Avenue NE, Suite D
Albuquerque, NM 87113
Phone (505) 294-0942 Toll-Free (877) 294-0942 Fax (505) 293-3430
www.soudermiller.com

THE NAVAJO NATION
McKINLEY COUNTY, NEW MEXICO

THOREAU BACA WELL CONNECTION
SECTION 19, T. 14 N., R. 13 W.
WELL SITE PIPING PLAN

FINAL DESIGN FOR REVIEW

THIS DRAWING IS INCOMPLETE AND NOT TO BE USED FOR CONSTRUCTION UNLESS IT IS STAMPED, SIGNED AND DATED

Designed	Drawn	Checked
TTT	AAV	JMG

Date: March 2021
Scale: Horiz: 1" = 10' Vert: N/A
Project No: 6922883
Sheet: C-6

P:\6-Baca-Prewitt (6922983)\Baca Thoreau Well Connection\CAD\DWG\6922883-Thoreau Well Conn-SITES.dwg
3/4/2021 1:49:52 PM aav

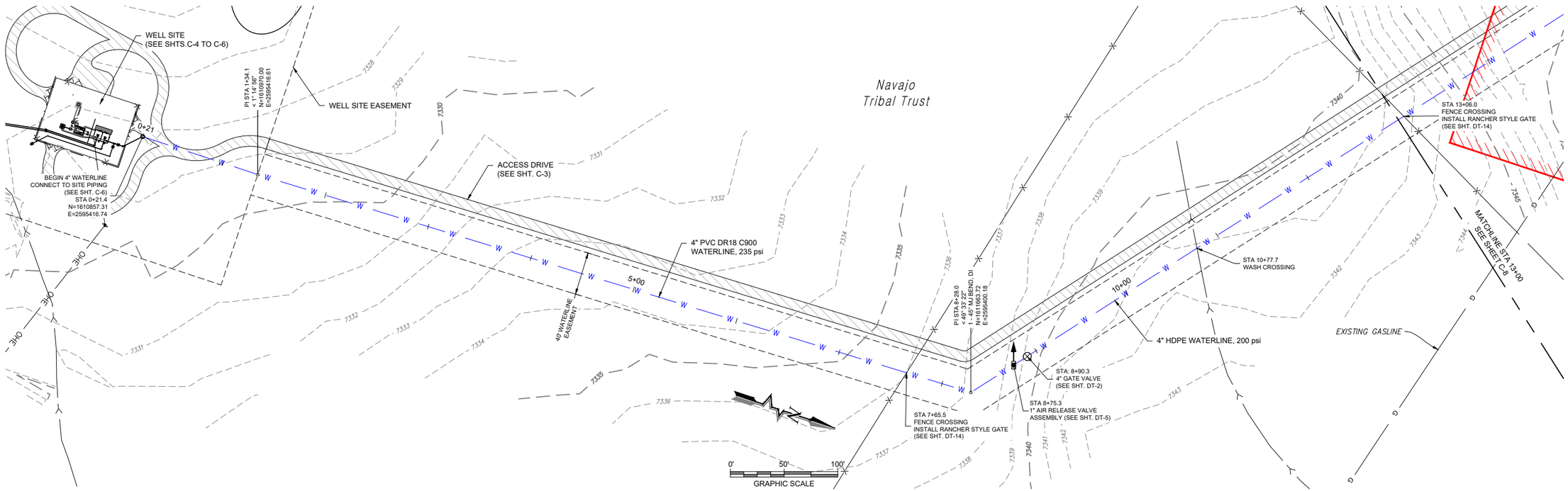

PLAN VIEW
4" WATERLINE

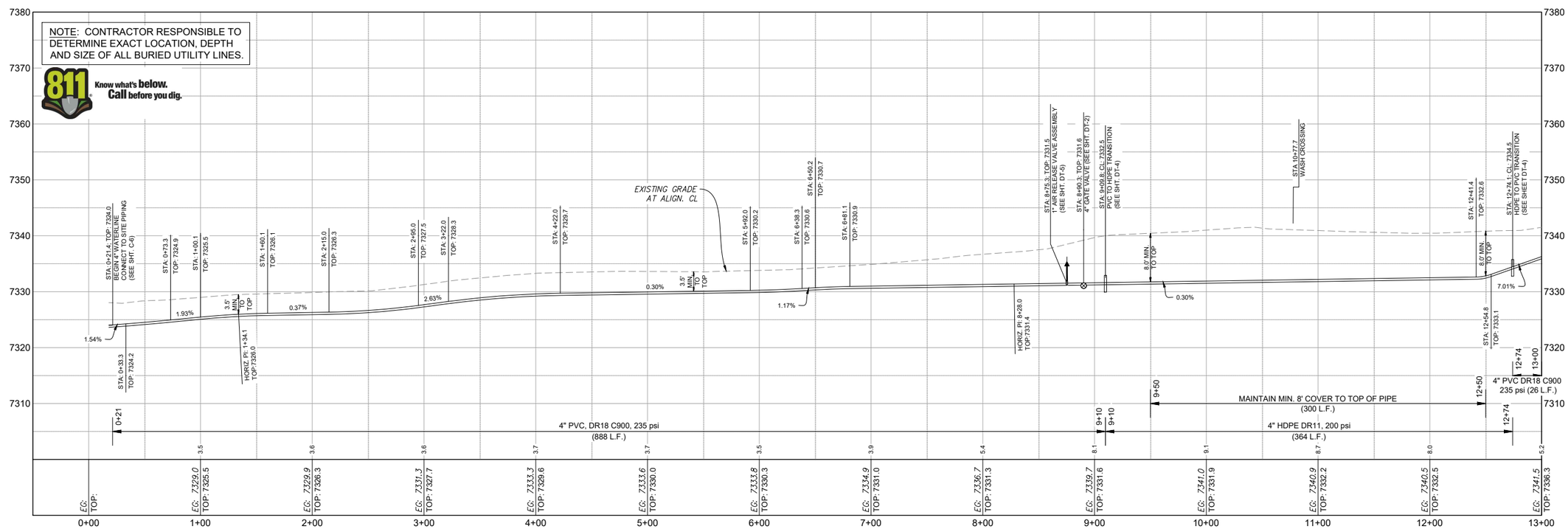

PROFILE VIEW
4" WATERLINE

Rev #	Date	Description	By	Chk'd

SOUDER, MILLER & ASSOCIATES
Engineering • Environmental • Geomatics
Serving the Southwest & Rocky Mountains
5454 Venice Avenue NE, Suite D
Albuquerque, NM 87113
Phone (505) 294-0942 Toll-Free (877) 294-0942 Fax (505) 293-3430
www.soudermiller.com

THE NAVAJO NATION

McKINLEY COUNTY, NEW MEXICO

THOREAU BACA WELL CONNECTION
SECTION 19, T. 14 N., R. 13 W.
PLAN & PROFILE STA 0+08.6 TO STA 13+00

FINAL DESIGN
FOR REVIEW

THIS DRAWING IS INCOMPLETE AND NOT TO BE USED FOR CONSTRUCTION UNLESS IT IS STAMPED, SIGNED AND DATED

Designed	Drawn	Checked
TTT	AAV	JMG

Date: March 2021

Scale: Horiz: 1" = 100'
Vert: 1" = 20'

Project No: 6922883

Sheet: C-7

P:\6Baca-Prewitt (6922883)\Baca Thoreau Well Connection\CAD\DWG\VFG - Thoreau Well Connection - (1) - (1).dwg
3/4/2021 1:50:27 PM aav

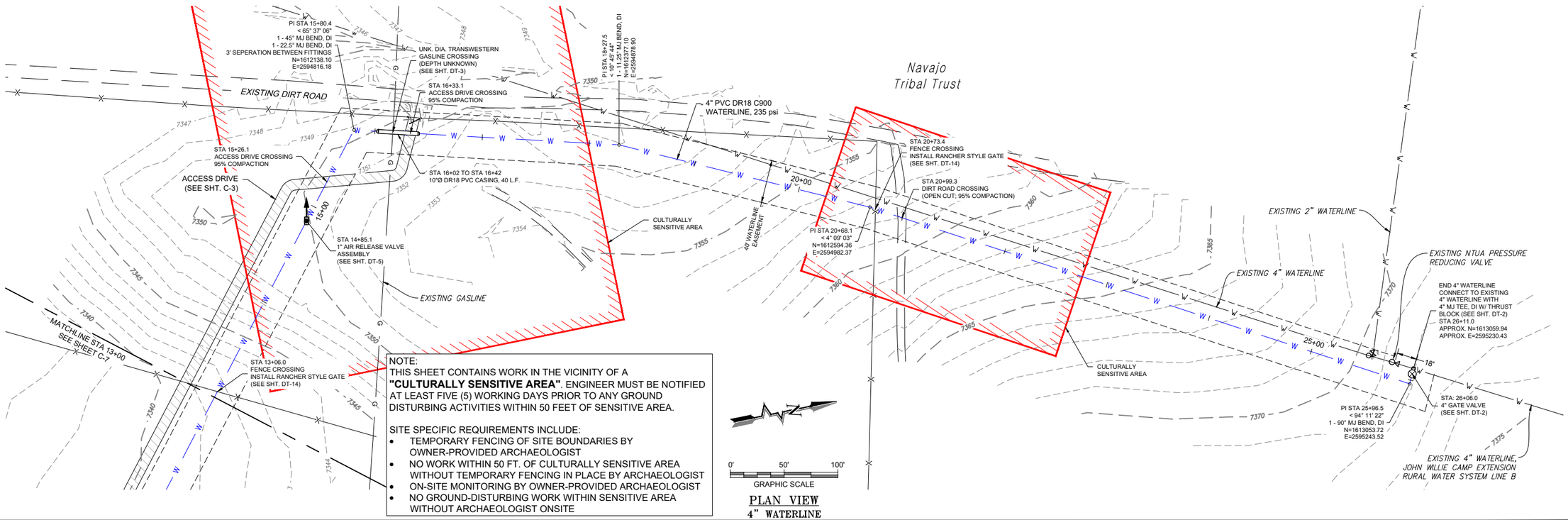

NOTE:
THIS SHEET CONTAINS WORK IN THE VICINITY OF A **"CULTURALLY SENSITIVE AREA"**. ENGINEER MUST BE NOTIFIED AT LEAST FIVE (5) WORKING DAYS PRIOR TO ANY GROUND DISTURBING ACTIVITIES WITHIN 50 FEET OF SENSITIVE AREA.

SITE SPECIFIC REQUIREMENTS INCLUDE:

- TEMPORARY FENCING OF SITE BOUNDARIES BY OWNER-PROVIDED ARCHAEOLOGIST
- NO WORK WITHIN 50 FT. OF CULTURALLY SENSITIVE AREA WITHOUT TEMPORARY FENCING IN PLACE BY ARCHAEOLOGIST
- ON-SITE MONITORING BY OWNER-PROVIDED ARCHAEOLOGIST
- NO GROUND-DISTURBING WORK WITHIN SENSITIVE AREA WITHOUT ARCHAEOLOGIST ONSITE

PLAN VIEW
4" WATERLINE

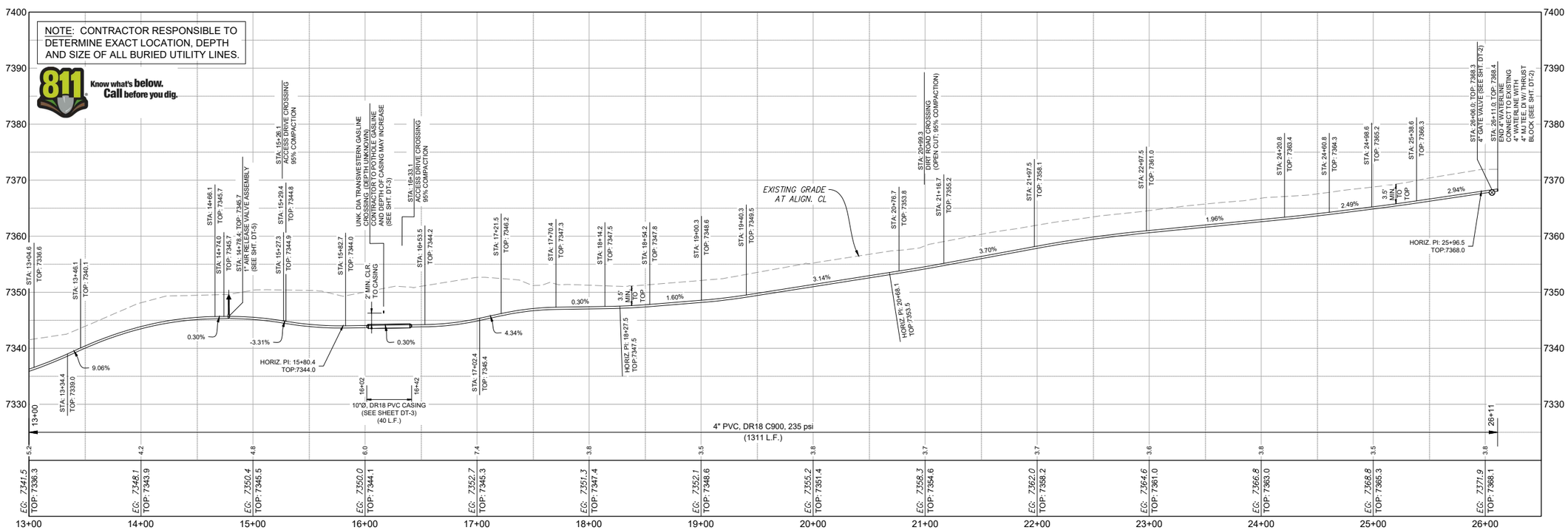

PROFILE VIEW
4" WATERLINE

Rev #	Date	Description	By	Chk'd

SOUDER, MILLER & ASSOCIATES
Engineering • Environmental • Geomatics
Serving the Southwest & Rocky Mountains
5454 Venice Avenue NE, Suite D
Albuquerque, NM 87113
Phone (505) 294-0942 Toll-Free (877) 294-0942 Fax (505) 293-3430
www.soudermiller.com

THE NAVAJO NATION
McKINLEY COUNTY, NEW MEXICO

THOREAU BACA WELL CONNECTION
SECTION 19, T. 14 N., R. 13 W.
PLAN & PROFILE STA 13+00 TO STA 26+11

FINAL DESIGN FOR REVIEW

THIS DRAWING IS INCOMPLETE AND NOT TO BE USED FOR CONSTRUCTION UNLESS IT IS STAMPED, SIGNED AND DATED

Designed	Drawn	Checked
TTT	AAV	JMG

Date: March 2021
Scale: Horiz: 1" = 100' Vert: 1" = 20'
Project No: 6922883
Sheet: C-8

P:\6Baca-Prewitt (6922883)\Baca Thoreau Well Connection\CAD\DWG\VFG - Thoreau Well Connection - (1) - (1).dwg
3/4/2021 1:50:49 PM aav

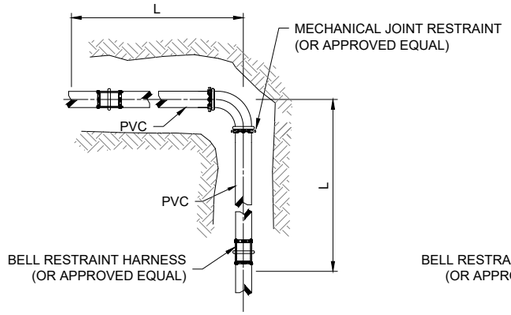

PLAN VIEW
JOINT RESTRAINT FOR MJ ELBOW

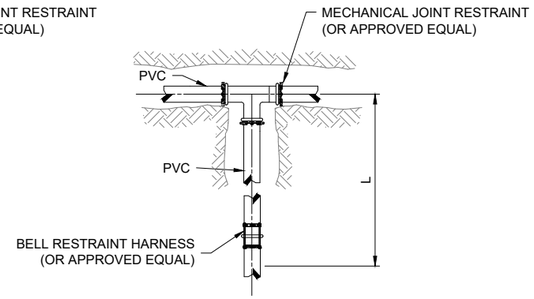

PLAN VIEW
JOINT RESTRAINT FOR MJ TEE

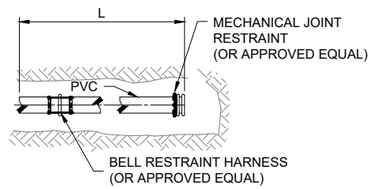

PLAN VIEW
JOINT RESTRAINT FOR DEAD END
AND/OR ISOLATION VALVE

Minimum Required Restraint Lengths (L) for Individual Fittings

Fitting	Pipe Size	Pipe DR	Test Pressure (psi)	Design Restraint Length (ft)
Isolation Valve/ Dead End	4	18	235	65
From End of Casing	4	18	235	30
Horizontal Bend or Sweep				
90°	4	18	235	30
45°	4	18	235	20
22.5°	4	18	235	20
11.25°	4	18	235	20
Vertical Bend or Sweep[1]				
22.5°, upper bend	4	18	235	20
22.5°, lower bend	4	18	235	20
11.25°, upper bend	4	18	235	20
11.25°, lower bend	4	18	235	20

NOTE:
1. INSTALL PER MANUFACTURER'S SPECIFICATIONS
2. SUBMIT JOINT RESTRAINT TABLE BASED ON MANUFACTURER'S SPECIFICATIONS. (APPROXIMATE LENGTHS PROVIDED BELOW)

WATERLINE JOINT RESTRAINTS AT
VERTICAL / HORIZONTAL BENDS AND GATE VALVES
NOT TO SCALE

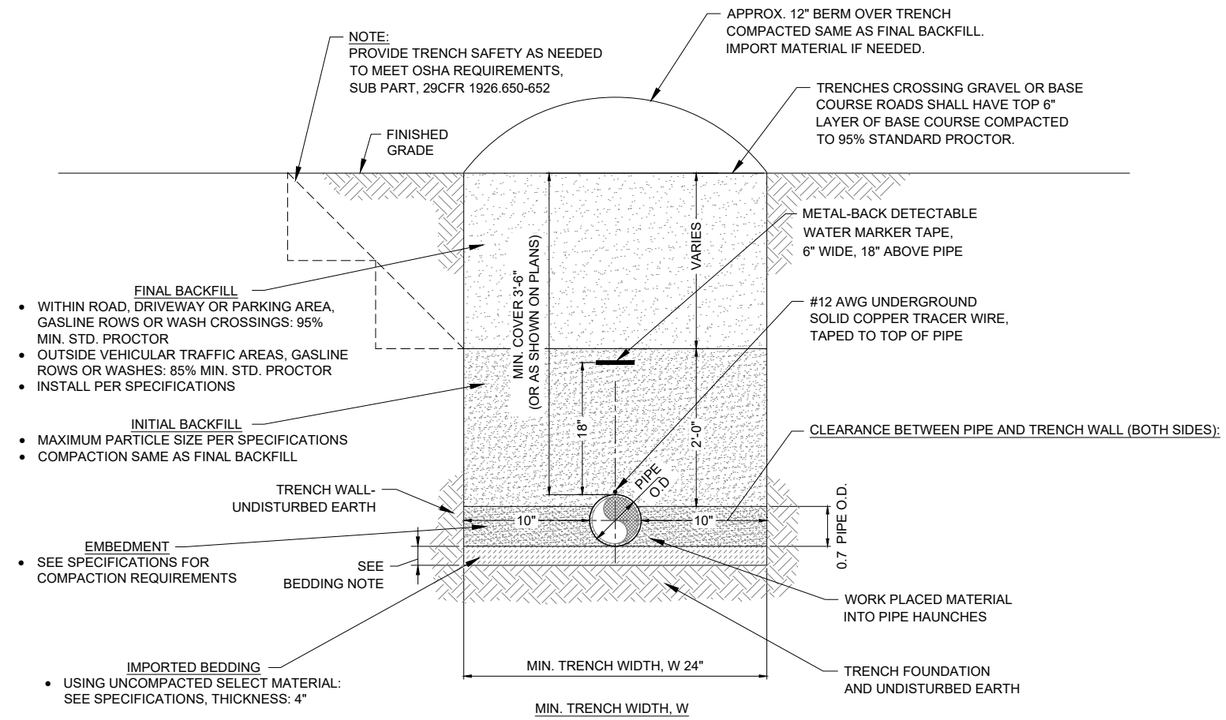

TYPICAL TRENCH DETAIL
NOT TO SCALE

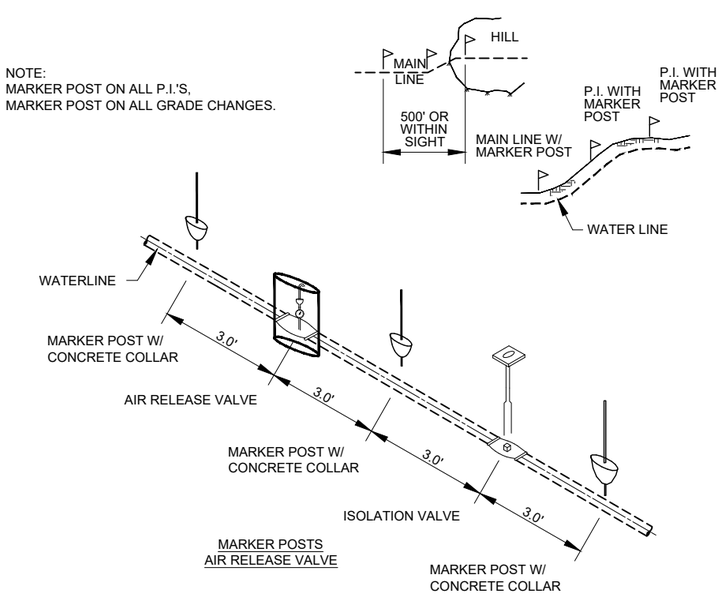

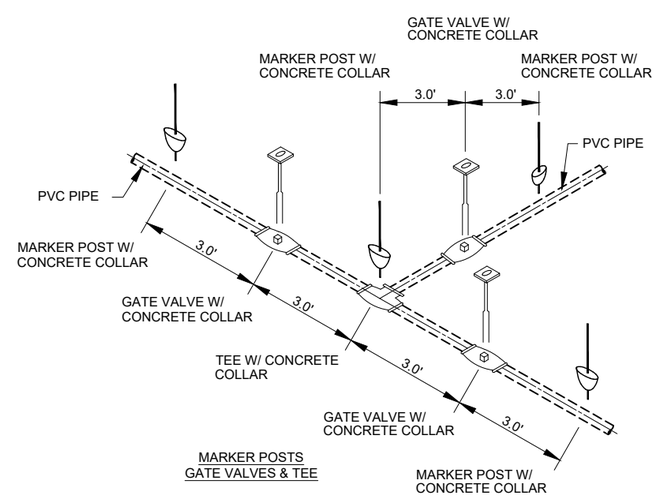

TYPICAL MARKER POSTS
NOT TO SCALE

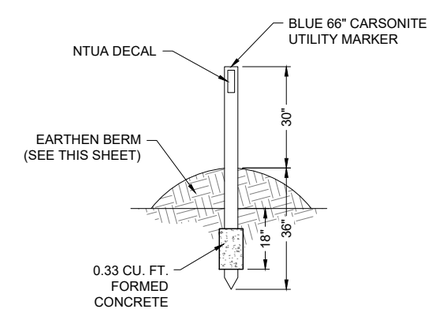

INDIVIDUAL MARKER POST
NOT TO SCALE

Rev #	Date	Description	By	Chk'd

SOUDER, MILLER & ASSOCIATES
Engineering • Environmental • Geomatics
Serving the Southwest & Rocky Mountains
5454 Venice Avenue NE, Suite D
Albuquerque, NM 87113
Phone (505) 294-0942 Toll-Free (877) 294-0942 Fax (505) 293-3430
www.soudermiller.com

THE NAVAJO NATION McKINLEY COUNTY, NEW MEXICO

THOREAU BACA WELL CONNECTION
SECTION 19, T. 14 N., R. 13 W.
TRENCH, JOINT RESTRAINT AND MARKER DETAILS

FINAL DESIGN
FOR REVIEW

THIS DRAWING IS INCOMPLETE AND NOT TO BE USED FOR CONSTRUCTION UNLESS IT IS STAMPED, SIGNED AND DATED

Designed	Drawn	Checked
TTT	AAV	JMG

Date: March 2021
Scale: Horiz: N/A Vert: N/A
Project No: 6922883
Sheet: DT-1

P:\6-Baca-Prewitt (6922883)\Baca Thoreau Well Connection\CAD\DWG\6922883-Thoreau Well Conn Details.dwg
3/4/2021 1:51:00 PM aav

THRUST BLOCK DIMENSION SCHEDULE			
Pipe Location	Pipe Size (Inches)	90° Bend H x W	Tee H x W
Pumphouse, Inlet & Outlet	4"	2'-0" x 2'-0"	N/A
Tee, Thoreau Water System Tie-in	4"	N/A	2'-0" x 2'-0"

GENERAL NOTES

1. A SOIL BEARING PRESSURE OF 1,500 psf WAS ASSUMED AS A CONSERVATIVE VALUE, PER RECOMMENDATION FROM OUR GEOTECHNICAL SUB-CONSULTANT.
2. ALL CONCRETE SHALL BE 3000 psi, MINIMUM COMPRESSIVE STRENGTH IN 28 DAYS

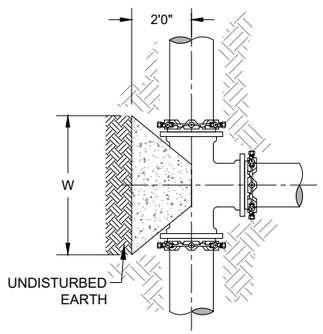

PLAN VIEW
CONCRETE BLOCKING
FOR TEE

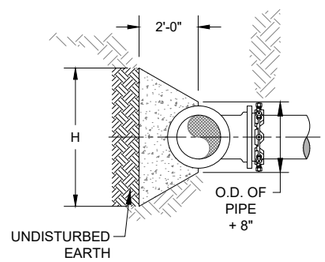

ELEVATION VIEW
CONCRETE BLOCKING
FOR TEE

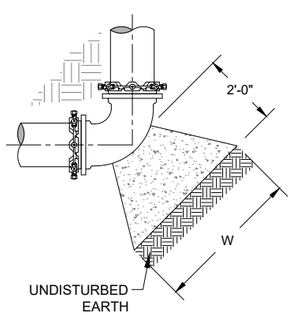

PLAN VIEW
CONCRETE BLOCKING
FOR ELBOW

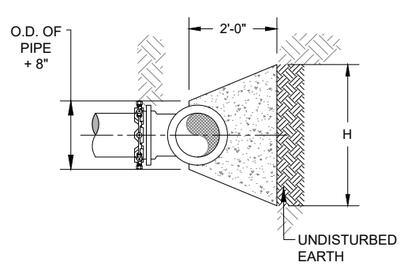

ELEVATION VIEW
CONCRETE BLOCKING
FOR ELBOW

THRUST BLOCK DETAIL
NOT TO SCALE

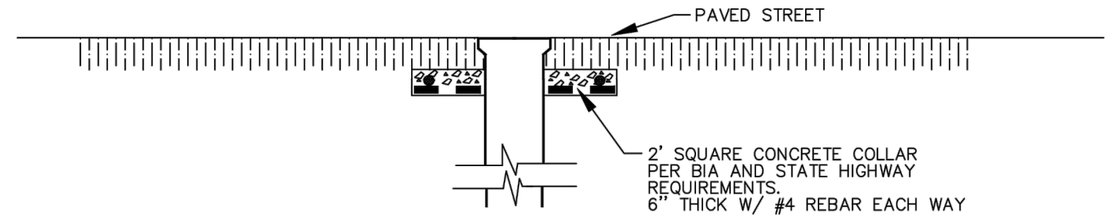

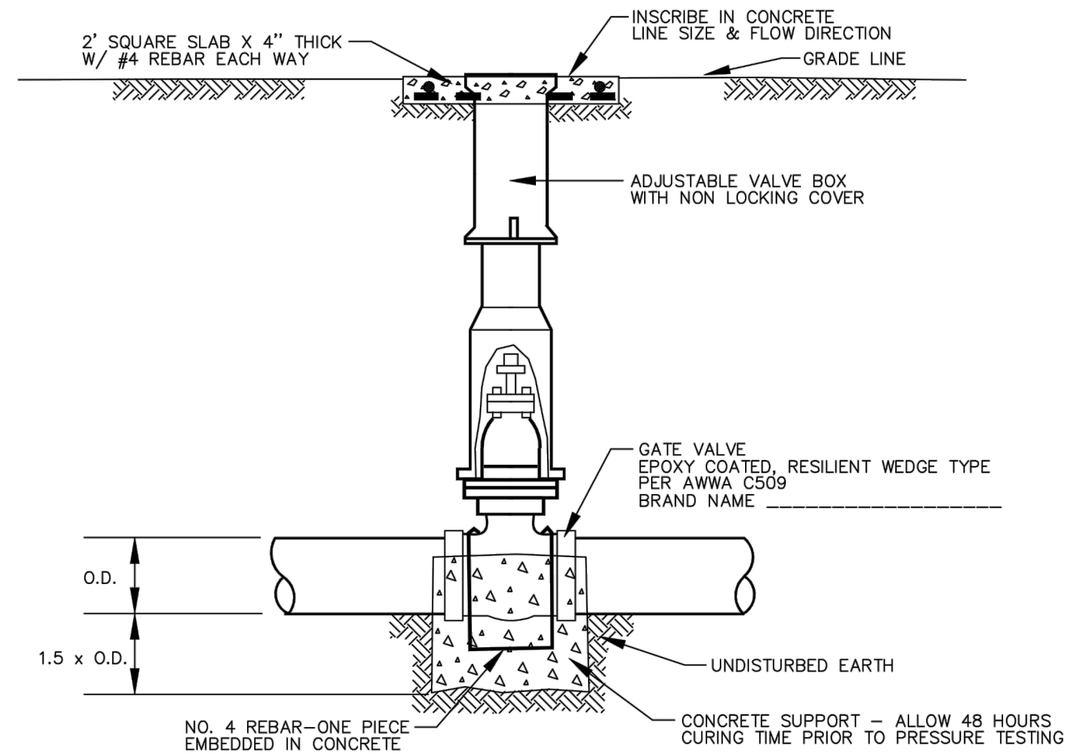

TYPICAL WATER MAIN VALVE INSTALLATION
NOT TO SCALE

REVISION	DATE	BRIEF	BY
01	7/99	STANDARDIZED	B.M.

U.S. DEPARTMENT OF HEALTH AND HUMAN SERVICES
PUBLIC HEALTH SERVICE
INDIAN HEALTH SERVICE
NAVAJO NATION

NAVAJO NATION,

STANDARD DRAWING NO. W-16
TYPICAL WATER MAIN VALVE INSTALLATION

OFFICE OF ENVIRONMENTAL HEALTH AND ENGINEERING
NAVAJO AREA OFFICE, WINDOW ROCK, ARIZONA

DRAWN BY: L.S. DATE: 12/92	CHECKED BY:12-92 DATE: P.S.	APPR. BY: P.S. DATE: 12/92	AUTOCAD DRAWING

Rev #	Date	Description	By	Ck'd

SOUDER, MILLER & ASSOCIATES
Engineering • Environmental • Geomatics
Serving the Southwest & Rocky Mountains
5454 Venice Avenue NE, Suite D
Albuquerque, NM 87113
Phone (505) 294-0942 Toll-Free (877) 294-0942 Fax (505) 293-3430
www.soudermiller.com

THE NAVAJO NATION
McKINLEY COUNTY, NEW MEXICO

THOREAU BACA WELL CONNECTION
SECTION 19, T. 14 N., R. 13 W.
GATE VALVE AND THRUST BLOCK DETAILS

FINAL DESIGN FOR REVIEW

THIS DRAWING IS INCOMPLETE AND NOT TO BE USED FOR CONSTRUCTION UNLESS IT IS STAMPED, SIGNED AND DATED

Designed	Drawn	Checked
TTT	AAV	JMG

Date: March 2021
Scale: Horiz: N/A Vert: N/A
Project No: 6922883
Sheet: DT-2

P:\6-Baca-Prewitt\6922883\Baca Thoreau Well Connection\CAD\DWG\6922883-Thoreau Well Conn Details.dwg
3/4/2021 1:51:03 PM aav

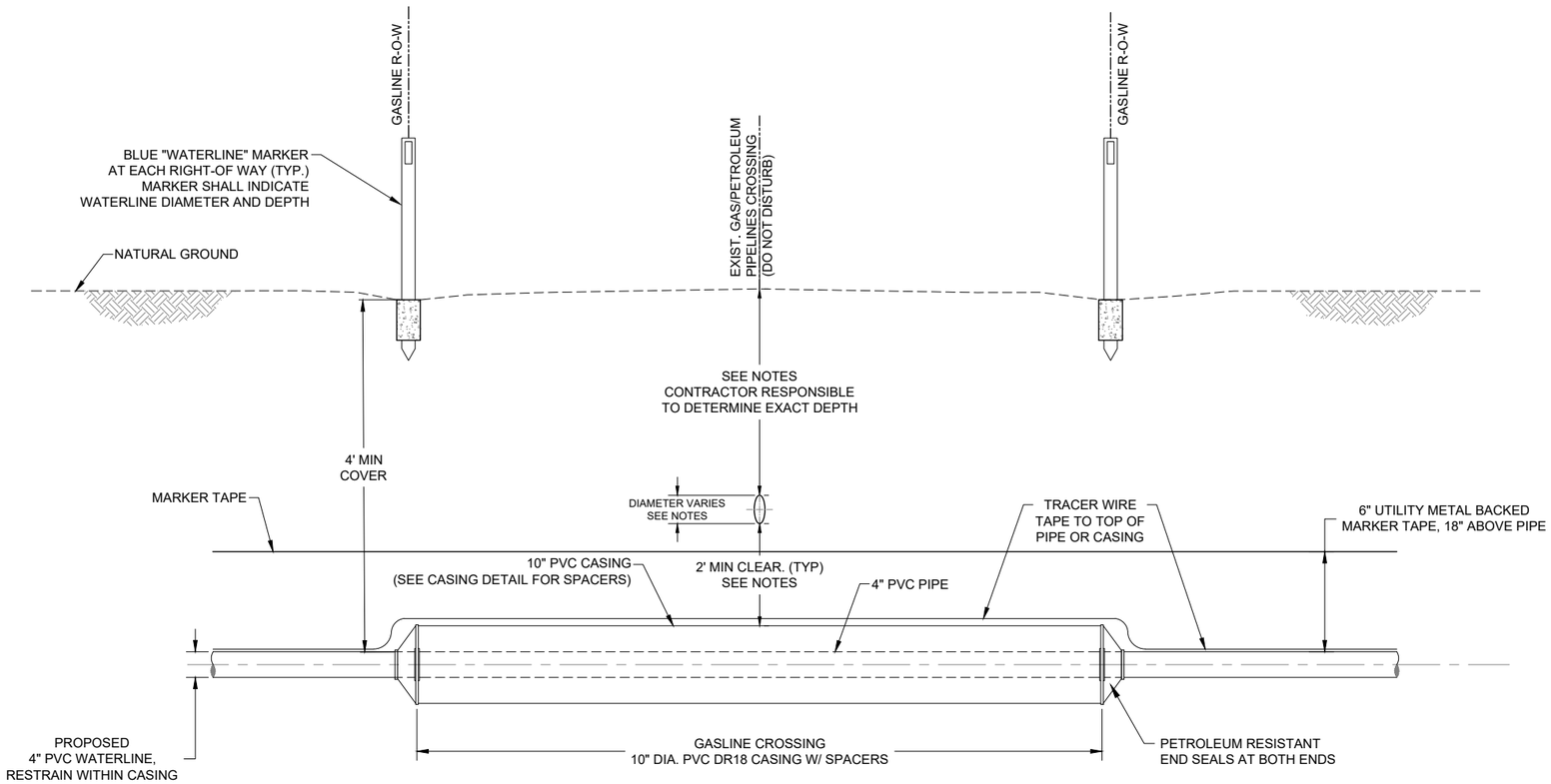

OPEN CUT GASLINE CROSSING

NOT TO SCALE

NOTES:

1. ALL DEPTHS AND LOCATIONS OF EXISTING UTILITIES ARE APPROXIMATE. CONTRACTOR RESPONSIBLE TO DETERMINE EXACT LOCATION, DEPTH AND SIZE OF ALL BURIED UTILITY LINES AND TO COMPLY WITH ALL REQUIREMENTS SET FORTH IN THE ENCROACHMENT AGREEMENTS PROVIDED BY UTILITY LINE OPERATORS AND IN THE DETAILS AND SPECIAL NOTES OF THESE DRAWINGS. IF GASLINE IS DEEPER THAN SHOWN ON DRAWINGS, MAINLINE AND CASING SHALL BE DEEPER AS WELL.
2. CONTRACTOR SHALL NOT SUSPEND EXISTING GASLINE PIPE MORE THAN 12 FEET WITHOUT SOIL BEDDING OR OTHER SUPPORT APPROVED BY GASLINE COMPANY.
3. NOTIFY GASLINE COMPANIES (LISTED BELOW) 30 WORKING DAYS AND CALL NM ONE-CALL AT LEAST 3 WORKING DAYS PRIOR TO GRADING, CROSSING, MATERIAL STORAGE OR EQUIPMENT MOVING ACROSS GASLINE RIGHT-OF-WAY OR ADJACENT ACCESS ROADS.
4. GASLINE COMPANY REPRESENTATIVE MUST BE PRESENT DURING ALL CONSTRUCTION ACTIVITIES WITHIN GASLINE RIGHT-OF-WAY, INCLUDING GRADING, EXCAVATION AND CLEANUP.
5. CONTRACTOR RESPONSIBLE TO LOCATE AND EXPOSE ALL EXISTING GAS / PETROLEUM LINES, IN ACCORDANCE WITH GAS COMPANY REQUIREMENTS.
6. EXCAVATE BY HAND OR VACUUM DRILL, ETC WITHIN 2 FEET OF GASLINE, OR MORE IF GASLINE COMPANY REQUIRES, WHICHEVER IS STRICTER.
7. CROSS UNDER ALL GASLINES. 2' MIN. CLEARANCE FROM TOP OF CASING TO BOTTOM OF GASLINE.
8. CONTRACTOR SHALL COMPLETE ANY AND ALL ENCROACHMENT AGREEMENTS REQUIRED BY GASLINE COMPANIES. ABIDE BY ALL CONDITIONS STIPULATED BY GASLINE COMPANIES.
9. HEAVY EQUIPMENT MUST CROSS PIPELINE ONLY AT CROSSING LOCATIONS APPROVED BY GASLINE COMPANIES.
10. CARRIER PIPE WITHIN A 200 FT. RADIUS OF GASLINE SHALL BE BELL-AND-SPIGOT PVC WITH PETROLEUM RESISTANT GASKETS.
11. TRACER WIRE CONTINUITY SHALL BE MAINTAINED ACROSS THE GASLINE XING.
12. APPROXIMATE DEPTH CALL OUTS ARE MEASURED FROM THE EXISTING GROUND TO THE TOP OF PIPE.
13. PVC PIPE WITHIN CASING TO BE RESTRAINED WITH BELL RESTRAINT HARNESSES.
14. WATERLINE SHALL BE INSTALLED BY OPEN CUT UNDER GASLINES WITH CASING FROM ROW TO ROW.
15. PERMANENT CROSSING MARKERS SHALL BE PLACED AT THE ENDS OF THE CASINGS FOR ALL WATERLINE GASLINE CROSSINGS.

UTILITY CONTACT:

TRANSWESTERN
ALLEN CHARLIE - FIELD CONTACT 505-870-9432

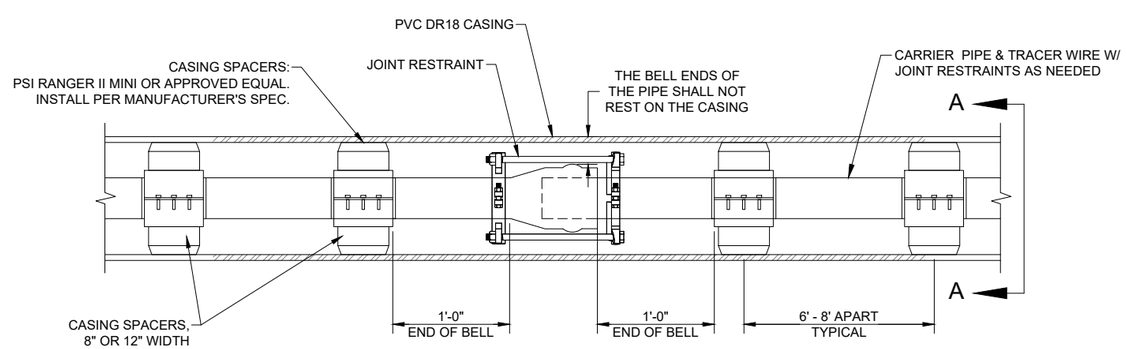

PIPE CASING DETAIL

NOT TO SCALE

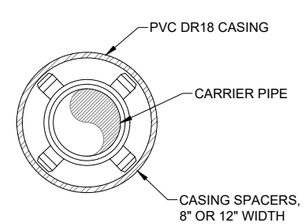

SECTION A-A

NOTES:

1. POSITION CASING SPACERS PER MANUFACTURER'S RECOMMENDATION.
2. SEAL ENDS OF CASING WITH RUBBER END SEAL

Rev #	Date	Description	By	Chk'd

SOUDER, MILLER & ASSOCIATES
Engineering • Environmental • Geomatics
Serving the Southwest & Rocky Mountains
5454 Venice Avenue NE, Suite D
Albuquerque, NM 87113
Phone (505) 294-0942 Toll-Free (877) 294-0942 Fax (505) 293-3430
www.soudermiller.com

THE NAVAJO NATION
McKINLEY COUNTY, NEW MEXICO

THOREAU BACA WELL CONNECTION
SECTION 19, T. 14 N., R. 13 W.
GASLINE CROSSING DETAIL

FINAL DESIGN
FOR REVIEW

THIS DRAWING IS INCOMPLETE AND NOT TO BE USED FOR CONSTRUCTION UNLESS IT IS STAMPED, SIGNED AND DATED

Designed	Drawn	Checked
TTT	AAV	JMG

Date: March 2021
Scale: Horiz: N/A Vert: N/A
Project No: 6922883
Sheet: DT-3

P:\6-Baca-Prewitt (6922883)\Baca Thoreau Well Connection\CAD\DWG\6922883-Thoreau Well Conn Details.dwg
3/4/2021 1:51:07 PM aav

Wall Anchor Summary

Station	Fitting	Type	Pipe Size (in)	DR Rating DR	Required Height/Width (ft)
9+10	PVC TO HDPE	Wall Anchor	4	11	**3.0**
12+74	HDPE TO PVC	Wall Anchor	4	11	**3.0**

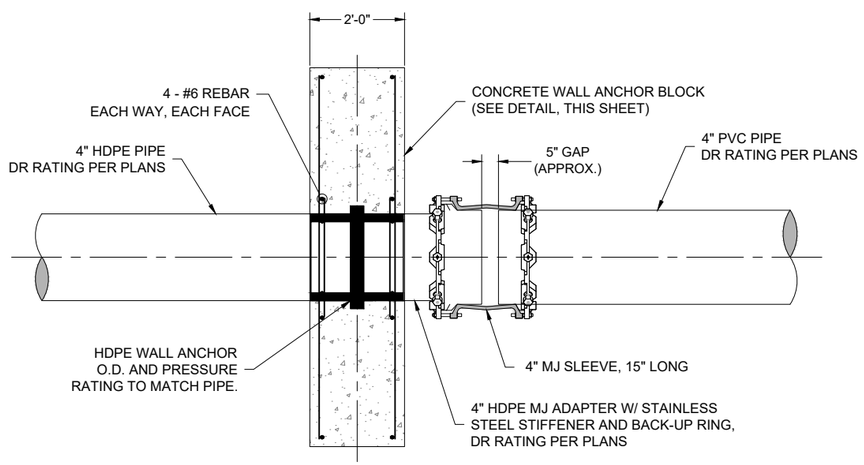

HDPE TO PVC PIPE TRANSITION W/
ANCHOR BLOCK & ANCHOR RING
NOT TO SCALE

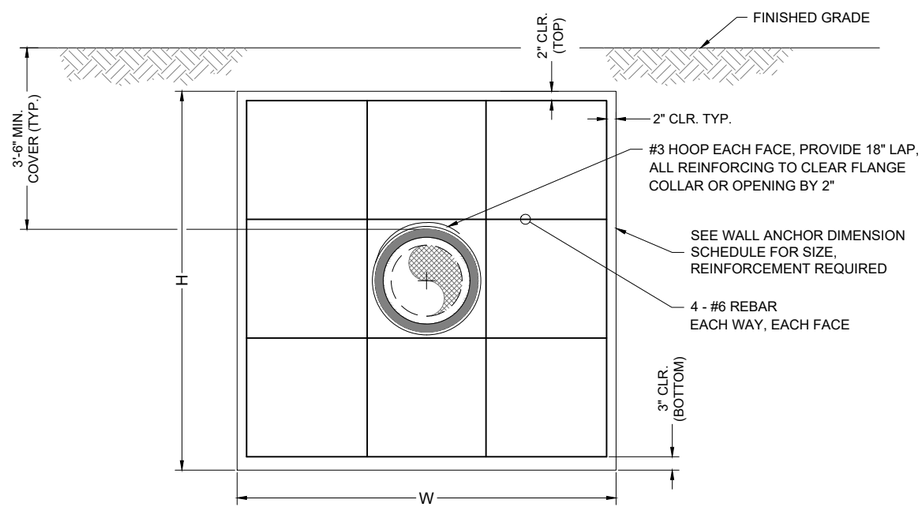

CONCRETE WALL ANCHOR BLOCK FOR USE
HDPE TRANSITION RESTRAINT
NOT TO SCALE

Rev #	Date	Description	By	Chk'd

SOUDER, MILLER & ASSOCIATES
Engineering • Environmental • Geomatics
Serving the Southwest & Rocky Mountains
5454 Venice Avenue NE, Suite D
Albuquerque, NM 87113
Phone (505) 294-0942 Toll-Free (877) 294-0942 Fax (505) 293-3430
www.soudermiller.com

THE NAVAJO NATION McKINLEY COUNTY, NEW MEXICO

THOREAU BACA WELL CONNECTION
SECTION 19, T. 14 N., R. 13 W.
PIPE TRANSITION DETAILS

FINAL DESIGN
FOR REVIEW

THIS DRAWING IS INCOMPLETE AND NOT TO BE USED FOR CONSTRUCTION UNLESS IT IS STAMPED, SIGNED AND DATED

Designed	Drawn	Checked
TTT	AAV	JMG

Date: March 2021
Scale: Horiz: N/A Vert: N/A
Project No: 6922883
Sheet: DT-4

P:\6Baca-Prewitt (6922883)\Baca Thoreau Well Connection\CAD\DWG\6922883-Thoreau Well Conn-ARV DETAIL.dwg
3/4/2021 1:51:15 PM aav

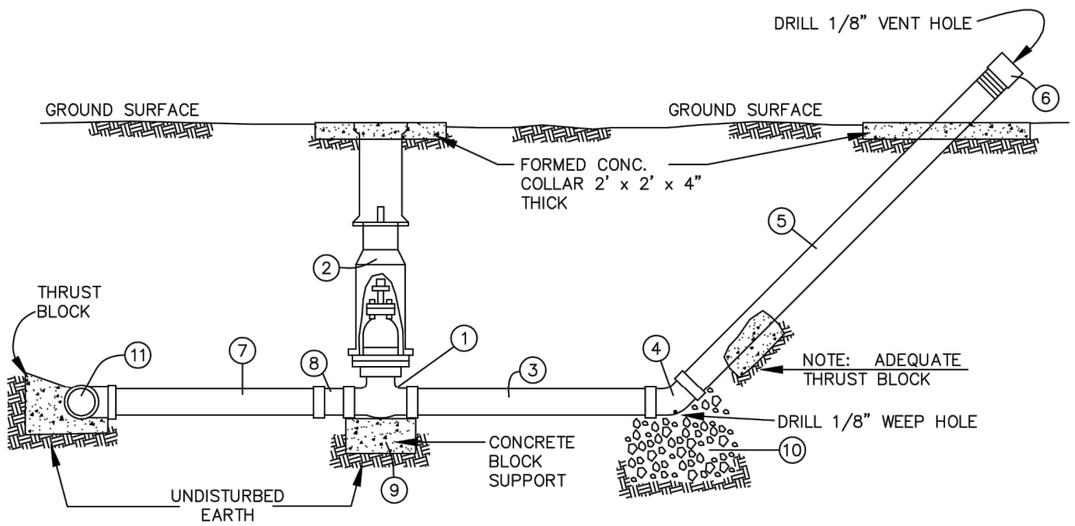

STANDARD FLUSH VALVE DETAIL

NOT TO SCALE

BILL OF MATERIALS		
ITEM	QUAN.	DESCRIPTION
1.	1	VALVE, GATE 2" F.I.P.T. C.I. w/ SQ. NUT
2.	1	VALVE, BOX 5 1/4" C.I., 36"–48"
3.	1	PIPE, 2" x 3' (MIN.), GALV. IRON
4.	1	ELBOW, 2"–45° GALV. IRON w/ 1/8" WEEP HOLE
5.	1	PIPE, 2" GALV. IRON x CUT TO LENGTH AS NEEDED
6.	1	CAP, 2" GALV. IRON w/ 1/8" VENT HOLE
7.	1	PIPE 2" PVC CUT TO LENGTH AS NEEDED
8.	1	ADAPTER, 2" BELL x MIPT, PVC
9.	1	BLOCK SOLID 4" x 8" x 16"
* 10.	1	FILTER ROCK, 12" x 12" x 12" (0.037 CU. YD.)
* 11.	1	MAIN LINE, SADDLE OR TEE

* NOT ON STANDARD LIST

NOTE:
1. WRAP BURIED GALV. PIPING WITH POLYGEN TAPE.

REVISION	DATE	BRIEF	BY
1	7/99	STANDARDIZED	B.M.

U.S. DEPARTMENT OF HEALTH AND HUMAN SERVICES
PUBLIC HEALTH SERVICE
INDIAN HEALTH SERVICE
NAVAJO NATION

NAVAJO NATION,

STANDARD DRAWING NO. W–1
2" FLUSH VALVE
LIST NO. 006502

OFFICE OF ENVIRONMENTAL HEALTH AND ENGINEERING
NAVAJO AREA OFFICE, WINDOW ROCK, ARIZONA

DRAWN BY: L.S.	CHECKED BY: P.S.	APPR. BY: T.M.	AUTOCAD DRAWING
DATE: 11/92	DATE: 2/93	DATE: 2/93	

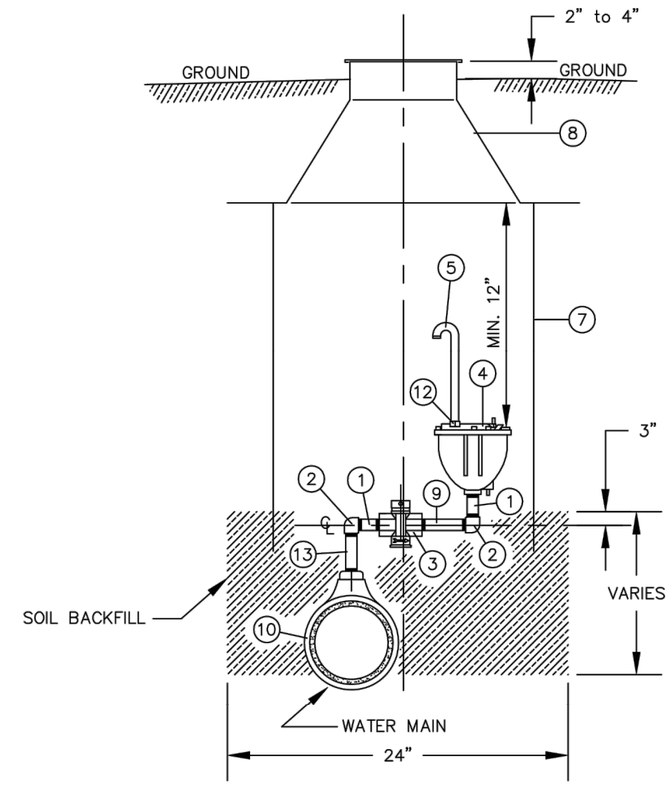

STANDARD AIR RELEASE VALVE DETAIL

NOT TO SCALE

BILL OF MATERIALS		
ITEM	QUAN.	DESCRIPTION
1.	2	NIPPLE, 1" x CLOSE, GALV.
2.	2	ELBOW, 1"–90°, GALV.
3.	1	CURBSTOP VALVE, 1" FIPT
4.	1	AIR RELEASE VALVE, 1" IN x 1/2" OUT BRAND NAME _____
5.	1	3/8" I.D. COPPER PIPE, 12"
7.	1	METER BOX, 20" DIAMETER
8.	1	METER BOX LID WITH FROST COVER
9.	1	NIPPLE, 1" x 3", GALV.
* 10.	1	TEE OR SADDLE, 1" TAP
12.	1	ADAPTER, 1/2" MIPT x 1/2" COMP.
13.	1	NIPPLE, 1" x 6", GALV.

* NOT ON STANDARD LIST

REVISION	DATE	BRIEF	BY
2	8/01	DELETED STATIONARY ROD AND GRAVEL	R.B.M.
1	7/99	STANDARDIZED	B.M.

U.S. DEPARTMENT OF HEALTH AND HUMAN SERVICES
PUBLIC HEALTH SERVICE
INDIAN HEALTH SERVICE
NAVAJO NATION

NAVAJO NATION,

STANDARD DRAWING NO. W–2
AIR RELEASE VALVE
LIST NO. 001434

OFFICE OF ENVIRONMENTAL HEALTH AND ENGINEERING
NAVAJO AREA OFFICE, WINDOW ROCK, ARIZONA

DRAWN BY: L.S.	CHECKED BY: P.S.	APPR. BY: P.S.	AUTOCAD DRAWING
DATE: 11/92	DATE: 2/93	DATE: 2/93	

Rev #	Date	Description	By	Ckk'd

SOUDER, MILLER & ASSOCIATES
Engineering • Environmental • Geomatics
Serving the Southwest & Rocky Mountains
5454 Venice Avenue NE, Suite D
Albuquerque, NM 87113
Phone (505) 294-0942 Toll-Free (877) 294-0942 Fax (505) 293-3430
www.soudermiller.com

THE NAVAJO NATION McKINLEY COUNTY, NEW MEXICO

THOREAU BACA WELL CONNECTION
SECTION 19, T. 14 N., R. 13 W.
2 INCH FLUSH VALVE AND
AIR RELEASE VALVE DETAILS

STANDARD DRAWING

THIS DRAWING IS INCOMPLETE AND NOT TO BE USED FOR CONSTRUCTION UNLESS IT IS STAMPED, SIGNED AND DATED

Designed	Drawn	Checked
TTT	AAV	JMG

Date: March 2021
Scale: Horiz: AS SHOWN Vert: N/A
Project No: 6922883
Sheet: DT-5

P:\6-Baca-Prewitt (6922883)\Baca Thoreau Well Connection\CADD\WG\6922883-Thoreau Well Conn Flush Valve Details.dwg
3/4/2021 1:51:24 PM aav

NOTES:

1. PRESSURE GAUGES AND HONEYWELL CONTROL ORDERED SEPARATELY ACCORDING TO WORKING PRESSURE
2. PIPE AND CAST IRON VALVES/FITTINGS PRIMED AND PAINTED BLUE, ORDER PAINT AND PRIMER SEPARATELY
3. HIGH PRESSURE RATED GAUGES AND VALVES ARE REQUIRED FOR PRESSURES > 150 PSI
4. WRAP EXTERIOR D.I. PIPING WITH POLYGEN TAPE

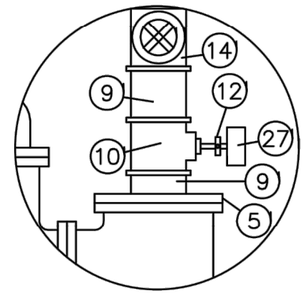

DETAIL "A"
N.T.S.

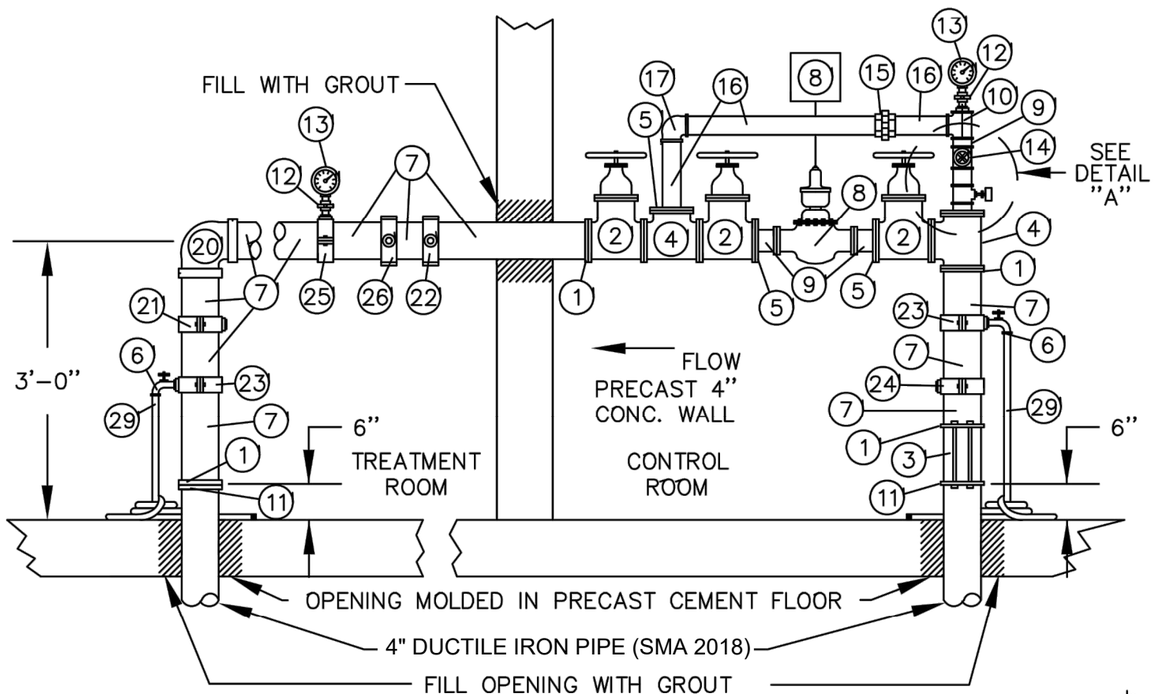

4" FLANGED PUMPHOUSE PIPING FOR FLOWS OF 50 TO 250* GPM

(125 # FLANGES) HEAD LOSS = 13 FT. @ 250 GPM

*DIFFERENT METER REQUIRED FOR FLOWS IN EXCESS OF 160 GPM OR PRESSURES > 150 PSI

ITEM	QUAN.	DESCRIPTION
1	4	COMPANION FLANGE, 4" FIPT X 9" FACE
2	3	GATE VALVE, 4" FLANGED, C.I. W/ WHEEL
3	1	CHECK VALVE, 4" SILENT, WAFER STYLE
		W/ BOLTS FLANGES
4	2	TEE, 4" FLANGED, C.I.
5	4	REDUCING FLANGE, 2"FIPT X 9"FACE
6	2	HOSE BIBB, 3/4" W/BACKFLOW PREVENTION
7	3	4" DUCTILE IRON PIPE (CUT AS NEEDED) (SMA 2018)
8	1	2" TURBINE WATER METER W/ACT-PAK,
		(SENSUS W160 DR/HSP) 150 PSI MAX.
		(W/COMPANION FLANGES)
9	5	NIPPLE, 2"X 3", G.I. (THREADED)
10	2	2"X 2"X 2" TEE W/2"X 3/4" & 3/4"X 1/4"
		BUSHINGS (FOR PRESSURE GAUGE & HIGH
		PRESSURE CUTOFF SWITCH)
11	2	FIELD FLANGE
12	3	VALVE, PRESSURE COCK, 1/4"
13	2	PRESSURE GAUGE
14	1	GATE VALVE, 2" BRASS (FEMALE THREADED
		ENDS)
15	1	UNION, 2" G.I.
16	3	G.I. PIPE, 2" (CUT & THREAD IN FIELD)
17	1	ELBOW, 90°, 2" G.I.
18		
19		
20	1	ELBOW, 90°, 4" G.I.
21	1	SADDLE, 4"X 1" (FOR CHLORINE INTRODUCTION)
22	1	SADDLE, 4"X 1", ROTATED 90° (FOR CHLORINE
		SUPPLY)
23	2	SADDLE, 4"X 3/4", (FOR HOSE BIBB)
24	1	SADDLE, 4"X 3/4", (FOR SEQUESTERING
		TREATMENT IF NEEDED)
25	1	SADDLE, 4"X 1", W/ 1"X 1/4" BUSHING
		(FOR PRESSURE GAUGE)
26	1	SADDLE, 4"X 3/4" ROTATED 90° W/3/4"X 1/2"
		BUSHING, (FOR FLUORIDE INTRODUCTION)
27	1	HIGH PRESSURE CUT-OFF
28		
29	2	GARDEN HOSE, 10', HOSE BIBB X PLAIN END

NOTE: PROJECT SPECIFIC MODIFICATIONS WERE MADE TO THIS DETAIL BY SMA FOR THE PUMP HOUSE TO BE CONNECTED TO THE THOREAU WELL DESIGNATED (SMA 2018).

REVISION	DATE	BRIEF	BY
3	1/06	ADDED METER HIGH SPEED PICK UP & ACT-PAK	D.S.
2	1/00	ADDED FIELD FLANGE TO MATERIALS LIST	R.B.M.

U.S. DEPARTMENT OF HEALTH AND HUMAN SERVICES
PUBLIC HEALTH SERVICE
INDIAN HEALTH SERVICE
NAVAJO NATION

NAVAJO NATION,

STANDARD DRAWING NO. W-14
4" PUMPHOUSE PIPING
LIST NO. 901550

OFFICE OF ENVIRONMENTAL HEALTH AND ENGINEERING
NAVAJO AREA OFFICE, WINDOW ROCK, ARIZONA

DRAWN BY: L.S. DATE: 1/93	CHECKED BY: P.S. DATE: 1/93	APPR. BY: P.S. DATE: 1/93	AUTOCAD DRAWING

Rev #	Date	Description	By	Ck'd

SOUDER, MILLER & ASSOCIATES
Engineering • Environmental • Geomatics
Serving the Southwest & Rocky Mountains
5454 Venice Avenue NE, Suite D
Albuquerque, NM 87113
Phone (505) 294-0942 Toll-Free (877) 294-0942 Fax (505) 293-3430
www.soudermiller.com

THE NAVAJO NATION McKINLEY COUNTY, NEW MEXICO

THOREAU BACA WELL CONNECTION
SECTION 19, T. 14 N., R. 13 W.
PUMPHOUSE PIPING DETAIL

STANDARD DRAWING

THIS DRAWING IS INCOMPLETE AND NOT TO BE USED FOR CONSTRUCTION UNLESS IT IS STAMPED, SIGNED AND DATED

Designed	Drawn	Checked
TTT	AAV	JMG

Date: March 2021
Scale: Horiz: N/A Vert: N/A
Project No: 6922883
Sheet: DT-6

P:\6-Baca-Prewitt (6922983)\Baca Thoreau Well Connection\CAD\DWG\6922883-Thoreau Well Conn Pumphouse.dwg
3/4/2021 1:51:34 PM aav

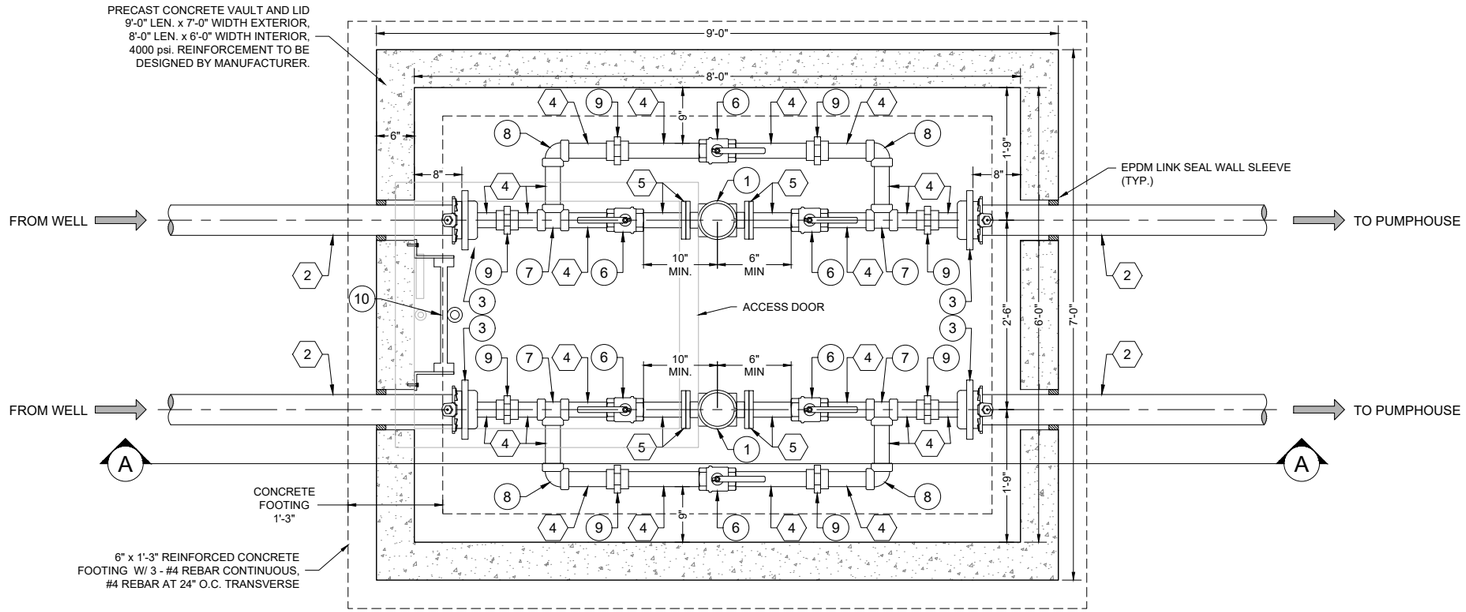

PLAN VIEW

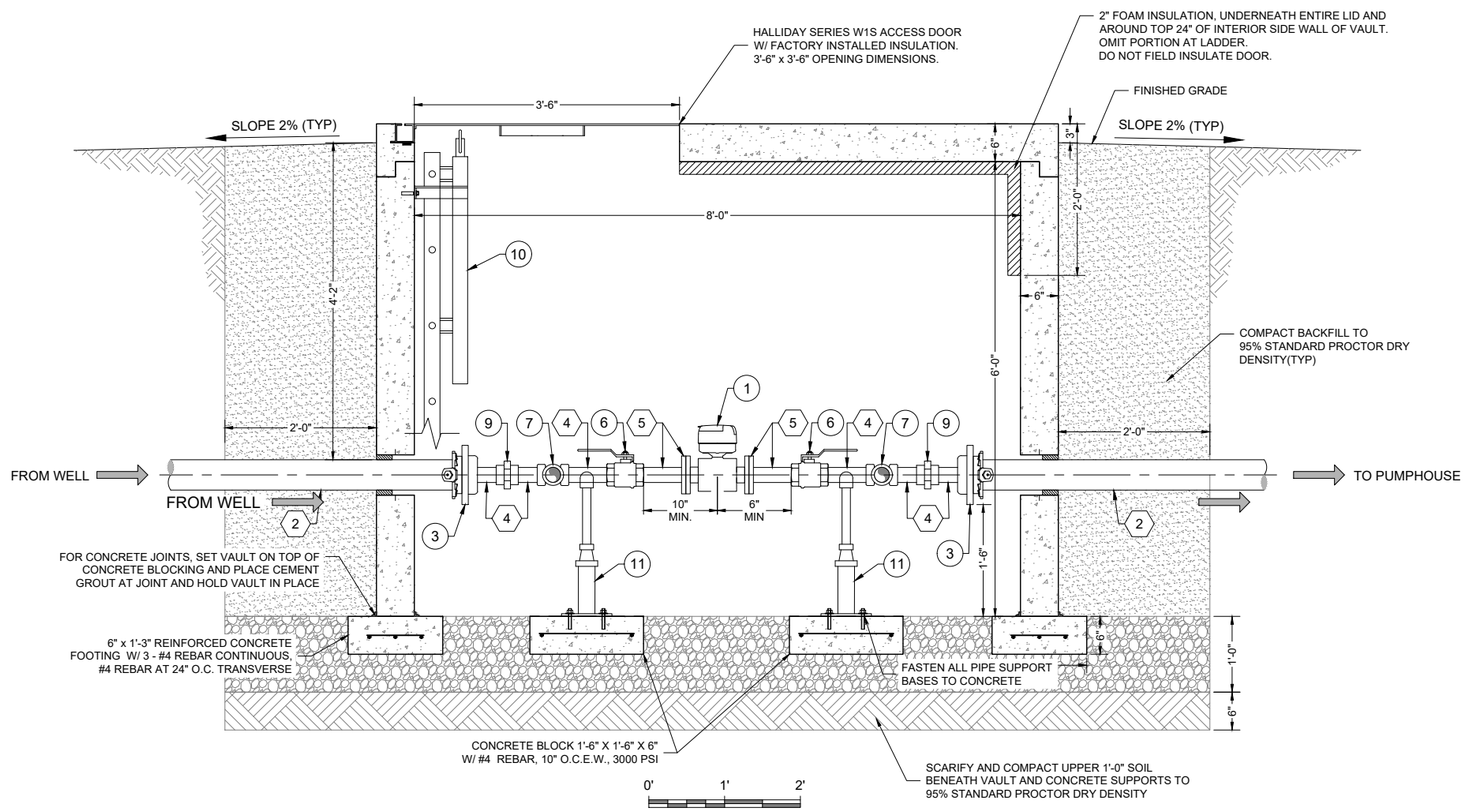

A-A SECTION VIEW

METER VAULT ASSEMBLY DETAIL

KEYED NOTES - METER VAULT ASSEMBLY

Item No.	Description
1	2" EVOQ MAG METER
2	4" DUCTILE IRON PIPE
3	4" x 2" MJ THREADED CAP
4	2" STAINLESS STEEL PIPE, NPT
5	2" FL x PE STAINLESS STEEL SPOOL, NPT
6	2" BALL VALVE, SS 304, NPT
7	2" TEE, SS 304, NPT
8	2" 90° BEND, SS 304, NPT
9	2" UNION, SS 304, NPT
10	ALUMINUM LADDER W/ SAFETY POST ANCHORED TO VAULT
11	ADJUSTABLE PIPE SUPPORT W/ U-SHAPED CRADLE

NOTES:

1. METERS SHALL HAVE MINIMUM 10" LENGTH STRAIGHT 2" PIPE UPSTREAM AND 6" LENGTH STRAIGHT 2" PIPE DOWNSTREAM AS MEASURED FROM CENTER OF METER.
2. SOME PIPE SUPPORTS NOT SHOWN FOR CLARITY. ENTIRE PIPING ASSEMBLY SHALL BE SUPPORTED.

Rev #	Date	Description	By	Chk'd

SOUDER, MILLER & ASSOCIATES
Engineering • Environmental • Geomatics
Serving the Southwest & Rocky Mountains
5454 Venice Avenue NE, Suite D
Albuquerque, NM 87113
Phone (505) 294-0942 Toll-Free (877) 294-0942 Fax (505) 293-3430
www.soudermiller.com

THE NAVAJO NATION McKINLEY COUNTY, NEW MEXICO

THOREAU BACA WELL CONNECTION
SECTION 19, T. 14 N., R. 13 W.
METER VAULT DETAIL

FINAL DESIGN
FOR REVIEW

THIS DRAWING IS INCOMPLETE AND NOT TO BE USED FOR CONSTRUCTION UNLESS IT IS STAMPED, SIGNED AND DATED

Designed	Drawn	Checked
TTT	AAV	JMG

Date: March 2021

Scale: Horiz: 1" = 2'
Vert: N/A

Project No: 6922883

Sheet: DT-7

P:\6-Baca-Prewitt (6922883)\Baca Thoreau Well Connection\CAD\DWG\6922883-Thoreau Well Conn Meter Vault.dwg
3/4/2021 1:31:40 PM aav

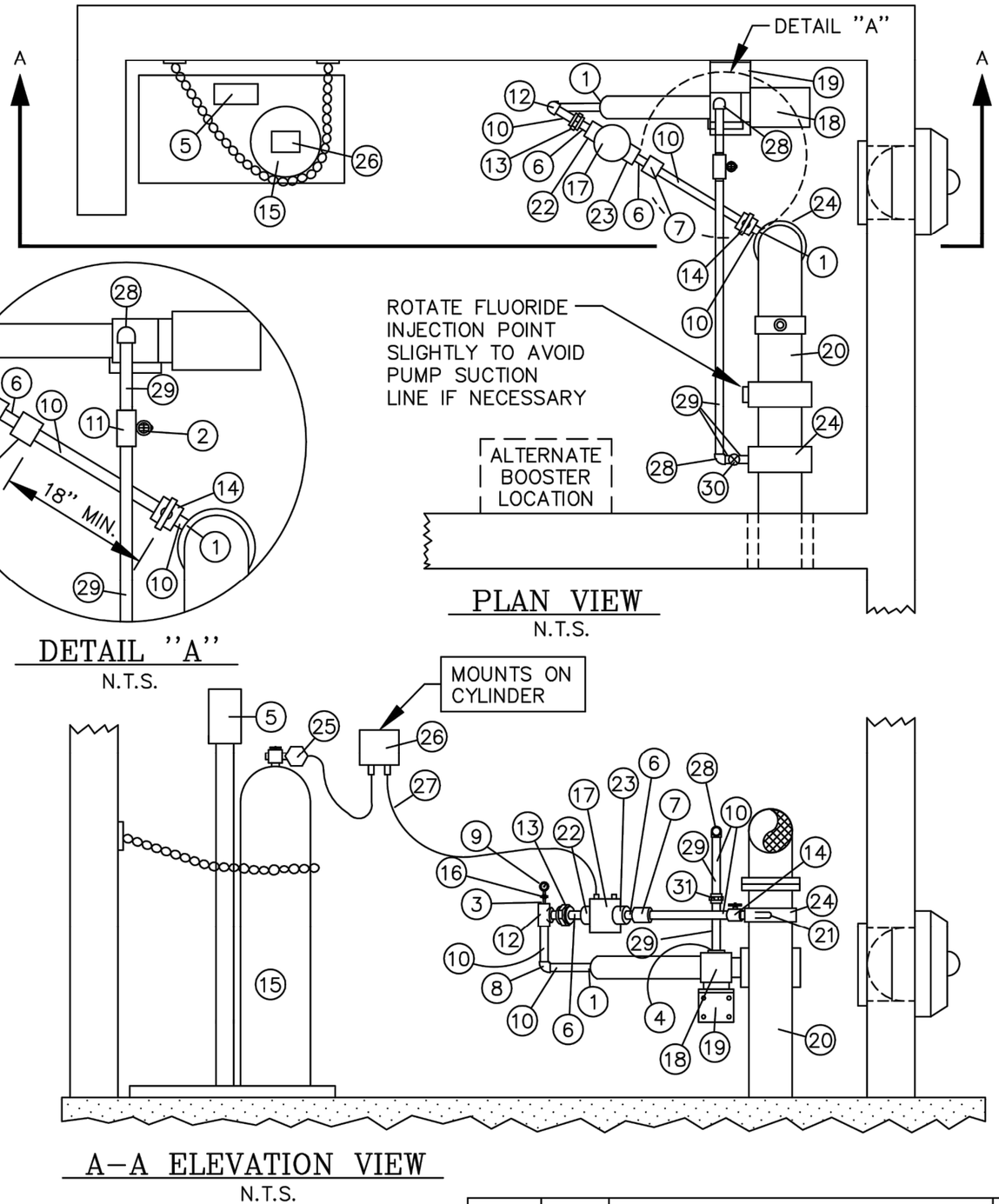

PLAN VIEW
N.T.S.

DETAIL "A"
N.T.S.

A–A ELEVATION VIEW
N.T.S.

ITEM	QUAN.	DESCRIPTION
1	3	ADAPTER 1" S X MIPT SCH. 80 PVC
2	1	BIBB HOSE, 3/4" MIPT BRASS (W/ BACKFLOW PREVENTOR)
3	1	BUSHING 1" S X 1/4" FIPT SCH. 80 PVC
4	1	BUSHING 1–1/4" X 1" GALV.
* 5	1	CHLORINE SCALE
6	2	BUSHING 1" S X 3/4" FIPT SCH. 80 PVC
7	1	COUPLING 1" SLIP SCH. 80 PVC
8	1	ELBOW 90° 1" SLIP SCH. 80 PVC
9	1	GAUGE GLYCER 1/4" 0–350
10	AS NEEDED	PIPE 1" CUT TO FIT SCH. 80 PVC
11	1	STAINER 1" X 1" FIPT GALV.
12	1	TEE 1" SLIP SCH. 80 PVC
13	1	UNION 1" SLIP SCH. 80 PVC
14	1	BALL VALVE 1" SLIP SCH. 80 PVC
*15	1	GAS CHLORINE CYLINDER
16	1	VALVE PRESSURE COCK 1/4" MIPT BRASS
*17	1	EJECTOR UNIT S–10 CHLORINATOR
*18	1	JACCUZZI–BOOSTER PUMP (MODEL PER SPEC)
19	1	BOOSTER PUMP–BRACKET
*20	AS NEEDED	PUMP HOUSE PIPING 4" ±
21	1	1/2" PVC–SOLUTION TUBE
22	1	NOZZLE–EJECTOR (MODEL PER SPEC)
23	1	TAILWAY–EJECTOR (MODEL PER SPEC)
24	2	SADDLE 4" X 1" IPT
25	1	PRESSURE REGULATOR
*26	1	CONTROL UNIT, ROTOMETER
27	AS NEEDED	TUBING
28	2	ELBOW 90° 1" FIPT SCH. 40 G.I.
29	AS NEEDED	PIPE 1" CUT AND THREADED TO FIT, G.I.
30	1	GATE VALVE, 1" BRASS, FIPT
31	1	UNION, 1" SCH. 40 G.I.

* NOT ON STANDARD LIST

NOTE:
1. BOOSTER INLET PIPING TO BE G.I. TO PROVIDE INCREASED SUPPORT.
2. BOOSTER PUMP INSTALLER TO MAKE TAP FOR CHLORINE AND FLUORIDE PUMP.
3. GAS CHLORINATION SHALL BE CONSIDERED FOR ALL FLOWRATES GREATER THAN 50 GPM.

U.S. DEPARTMENT OF HEALTH AND HUMAN SERVICES
PUBLIC HEALTH SERVICE
INDIAN HEALTH SERVICE
NAVAJO NATION

NAVAJO NATION,

STANDARD DRAWING NO. W–15
GAS CHLORINATION
LIST NO. 902000

OFFICE OF ENVIRONMENTAL HEALTH AND ENGINEERING
NAVAJO AREA OFFICE, WINDOW ROCK, ARIZONA

REVISION	DATE	BRIEF	BY
1	7/99	STANDARDIZED	B.M.

DRAWN BY: L.S. DATE: 1/93	CHECKED BY: P.S. DATE: 1/93	APPR. BY: P.S. DATE: 1/93	AUTOCAD DRAWING

Rev #	Date	Description	By	Ck'd

SOUDER, MILLER & ASSOCIATES
Engineering • Environmental • Geomatics
Serving the Southwest & Rocky Mountains
5454 Venice Avenue NE, Suite D
Albuquerque, NM 87113
Phone (505) 294-0942 Toll-Free (877) 294-0942 Fax (505) 293-3430
www.soudermiller.com

THE NAVAJO NATION
McKINLEY COUNTY, NEW MEXICO

THOREAU BACA WELL CONNECTION
SECTION 19, T. 14 N., R. 13 W.
GAS CHLORINATION DETAILS

STANDARD DRAWING

THIS DRAWING IS INCOMPLETE AND NOT TO BE USED FOR CONSTRUCTION UNLESS IT IS STAMPED, SIGNED AND DATED

Designed	Drawn	Checked
TTT	AAV	JMG

Date: March 2021
Scale: Horiz: N/A Vert: N/A
Project No: 6922883
Sheet: DT-8

P:\6-Baca-Prewitt (6922883)\Baca Thoreau Well Connection\CADD\WG\6922883-Thoreau Well Conn Pumphouse.dwg
3/4/2021 1:51:48 PM aav

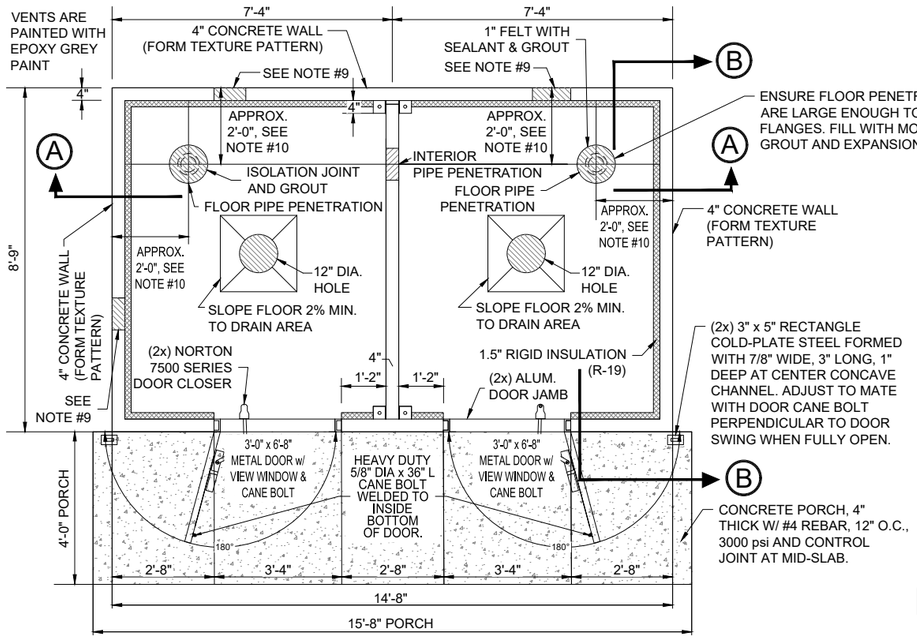

PLAN VIEW OF BUILDING
NOT TO SCALE

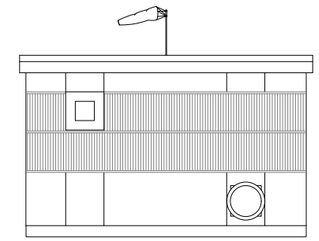

REAR ELEVATION
NOT TO SCALE

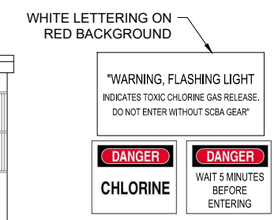

SIGN DETAIL

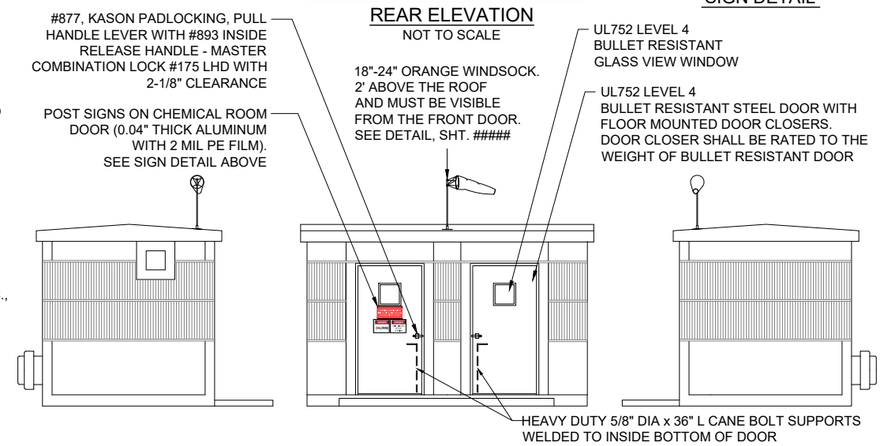

LEFT SIDE ELEVATION
NOT TO SCALE

FRONT ELEVATION
NOT TO SCALE

RIGHT SIDE ELEVATION
NOT TO SCALE

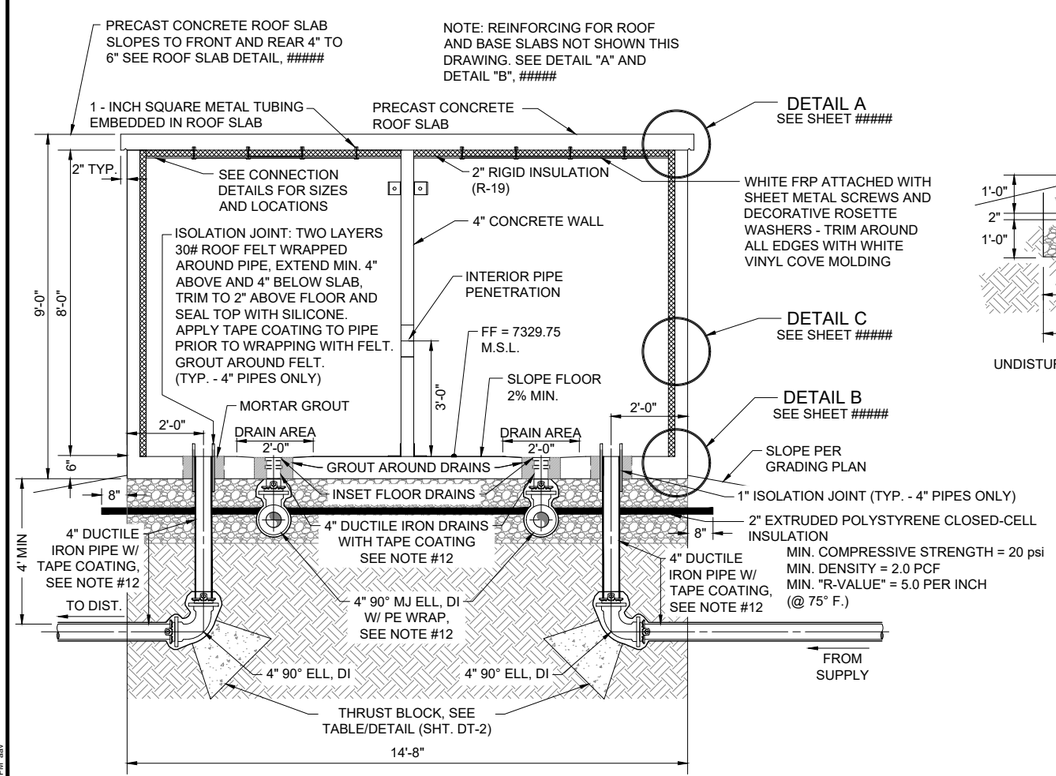

ELEVATION VIEW OF BUILDING AND UNDERGROUND PIPING
NOT TO SCALE

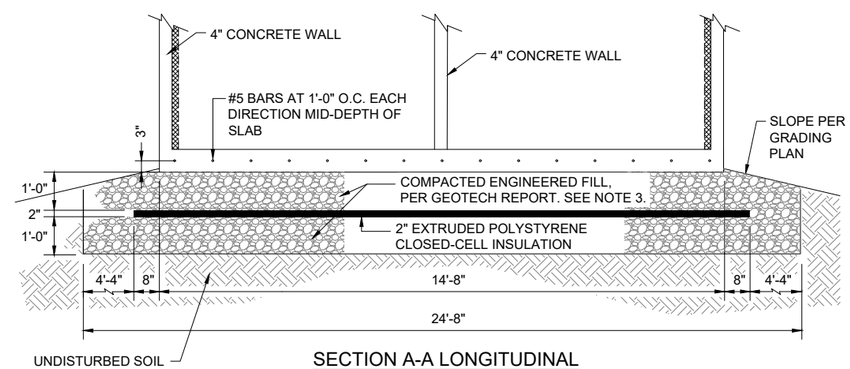

SECTION A-A LONGITUDINAL
NOT TO SCALE

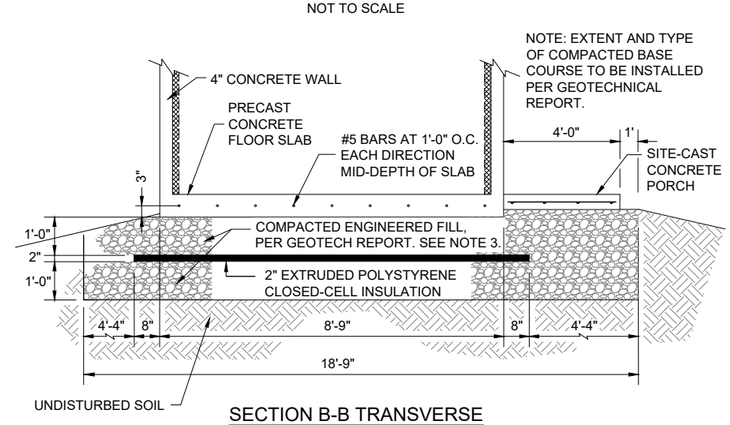

SECTION B-B TRANSVERSE
NOT TO SCALE

NOTES

1. THE GOVERNING CODE IS THE INTERNATIONAL BUILDING CODE, MOST RECENT EDITION.
2. MINIMUM DESIGN LIVE LOADS SHALL BE:
   25 PSF - ROOF SNOW LOAD
   25 PSF - HORIZONTAL WIND LOAD
   35 PCF - EQUIVALENT BACKFILL FLUID PRESSURE
   SEISMIC ZONE II REQUIREMENTS
3. BUILDING FOUNDATION, SUB-FOUNDATION, AND SITE GRADING SHALL BE PROVIDED AS SPECIFIED IN GEOTECHNICAL REPORT, PROVIDED AS APPENDIX TO CONTRACT DOCUMENTS. REFER TO GEOTECHNICAL REPORT FOR FURTHER INFORMATION.
4. ALL SITE-CAST CONCRETE SHALL BE MADE WITH TYPE II CEMENT AND SHALL ATTAIN A MINIMUM COMPRESSIVE STRENGTH OF 3,000 psi WITHIN 28 DAYS. THE MIX DESIGN SHOULD INCLUDE 5% (±1%) AIR ENTRAINMENT AND SHOULD BE PLACED AND CURED IN ACCORDANCE WITH THE ACI MANUAL OF CONCRETE PRACTICE, VOLUMES 1 THRU 5. SLUMP AT THE TIME OF PLACEMENT SHOULD NOT EXCEED FOUR (4) INCHES, AND MECHANICAL VIBRATION SHOULD BE EMPLOYED FOR CONSOLIDATION TO ELIMINATE VOIDS AND HONEYCOMBING.
5. PRECAST CONCRETE COMPONENTS SHALL BE CERTIFIED BY THE SUPPLIER TO HAVE ATTAINED A MINIMUM STRENGTH OF 3,000 psi AT TRANSPORT TIME WITH FINAL CONCRETE STRENGTH TO BE AT LEAST 3,500 psi WITHIN 28 DAYS. VERIFICATION OF CONCRETE STRENGTH SHALL BE PROVIDED BY THE SUPPLIER UPON REQUEST AND SHALL BE CONFIRMED THROUGH CYLINDER BREAKS FROM NORMAL PRODUCTION PROCEDURES AND IN-HOUSE QUALITY CONTROL. A SET OF FOUR (4) CYLINDERS SHALL BE TAKEN AT RANDOM IN THE PLANT NOT LESS THAN ONCE DURING EACH WEEK OF PRODUCTION.
6. CONCRETE REINFORCING STEEL SHALL BE ASTM A-615 BILLET BARS, GRADE 40. BARS SHALL BE LAPPED AT LEAST THIRTY (30) BAR DIAMETERS AT SPLICES AND CORNER BARS SHALL BE PROVIDED TO MATCH HORIZONTAL REINFORCING.
7. STRUCTURAL STEEL, EMBEDMENT STEEL, AND CONNECTIONS SHALL CONFORM TO ASTM A-36. ALL EXPOSED STEEL PLATES AND CONNECTIONS SHALL BE PAINTED WITH ONE FIELD COAT OF COMPATIBLE PRIMER AND ONE COAT OF EPOXY PAINT.
8. FIELD WELDING SHALL BE PERFORMED USING E70XX ELECTRODES AND SHALL CONFORM TO STANDARDS OF THE AMERICAN WELDING SOCIETY FOR WELDING IN BUILDING CONSTRUCTION.
9. ALL DOOR FRAMES, FAN AND VENT ASSEMBLIES AND SLAB PENETRATION SHALL BE CAST INTO THEIR RESPECTIVE SLABS.
10. CONTRACTOR RESPONSIBLE TO DETERMINE SPACE REQUIREMENTS FOR PLUMBING TRAIN, AS WELL AS EXHAUST FAN, VENTS, AND ELECTRICAL CONDUITS, AND SUBMIT SHOP DRAWINGS OF BUILDING, INCLUDING LOCATIONS AND SIZES OF FLOOR, EXTERIOR WALL AND INTERIOR WALL PENETRATIONS, FOR ENGINEER'S APPROVAL PRIOR TO FABRICATING PRE-CAST CONCRETE BUILDING. ADEQUATE WALL CLEARANCE SHALL BE PROVIDED FOR O&M OF ALL FLANGES, VALVES AND OTHER APPURTENANCES.
11. ALL BURIED PIPE WITHIN 5 FEET OF BUILDING SHALL BE DUCTILE IRON, 350 psi, SOLID PIPE PIECES ONLY. NO DUCTILE IRON PIPE JOINTS ALLOWED.
12. 4" DUCTILE IRON PIPE, TWO-PART EPOXY-COATED AND MORTAR LINED. COLD APPLIED TAPE-COATED PER SPECIFICATIONS FROM TOP OF FLOOR TO BURIED ELL. DOUBLE WRAP WITH POLYETHYLENE FROM ABOVE ELL TO PVC TRANSITION BEYOND FOUNDATION (TYP.).
13. 4" DUCTILE IRON DRAIN LINE, TWO-PART EPOXY-COATED AND MORTAR LINED. COLD APPLIED TAPE-COATED PER SPECIFICATIONS FROM INSET DRAIN TO BURIED ELL. DOUBLE WRAP WITH POLYETHYLENE FROM ABOVE ELL TO PVC TRANSITION BEYOND FOUNDATION (TYP.).
14. CONTRACTOR RESPONSIBLE FOR LOCATING AND DETERMINING ELECTRICAL CONDUIT PENETRATIONS.

Rev #	Date	Description	By	Chk'd

SOUDER, MILLER & ASSOCIATES
Engineering • Environmental • Geomatics
Serving the Southwest & Rocky Mountains
5454 Venice Avenue NE, Suite D
Albuquerque, NM 87113
Phone (505) 294-0942 Toll-Free (877) 294-0942 Fax (505) 293-3430
www.soudermiller.com

THE NAVAJO NATION
McKINLEY COUNTY, NEW MEXICO

THOREAU BACA WELL CONNECTION
SECTION 19, T. 14 N., R. 13 W.
BUILDING AND PIPING DETAIL

FINAL DESIGN FOR REVIEW

THIS DRAWING IS INCOMPLETE AND NOT TO BE USED FOR CONSTRUCTION UNLESS IT IS STAMPED, SIGNED AND DATED

Designed	Drawn	Checked
TTT	AAV	JMG

Date: March 2021
Scale: Horiz: N/A Vert: N/A
Project No: 6922883
Sheet: DT-9

P:\6-Baca-Prewitt (6922883)\Baca Thoreau Well Connection\CAD\DWG\6922883-Thoreau Well Conn Pumphouse.dwg
3/4/2021 1:51:54 PM aav

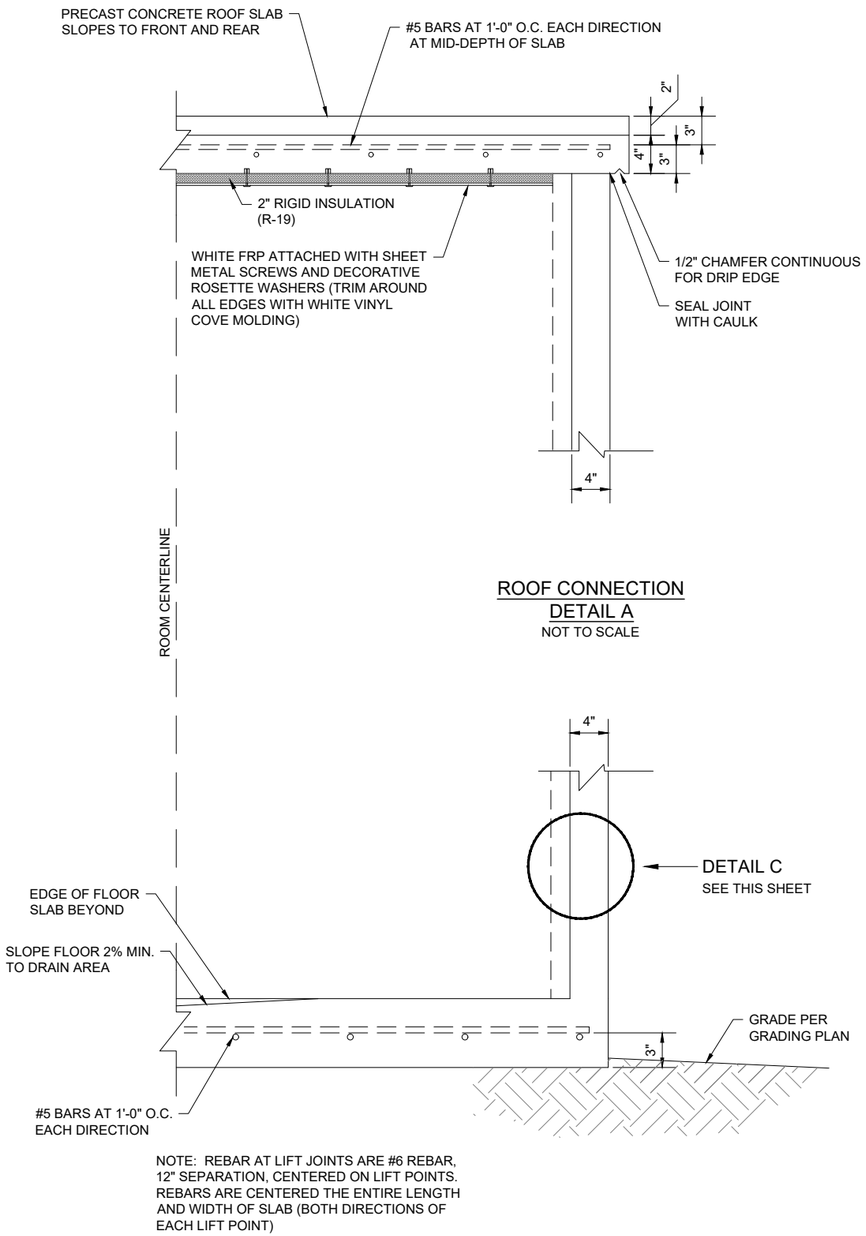

ROOF CONNECTION
DETAIL A
NOT TO SCALE

FLOOR CONNECTION
DETAIL B
NOT TO SCALE

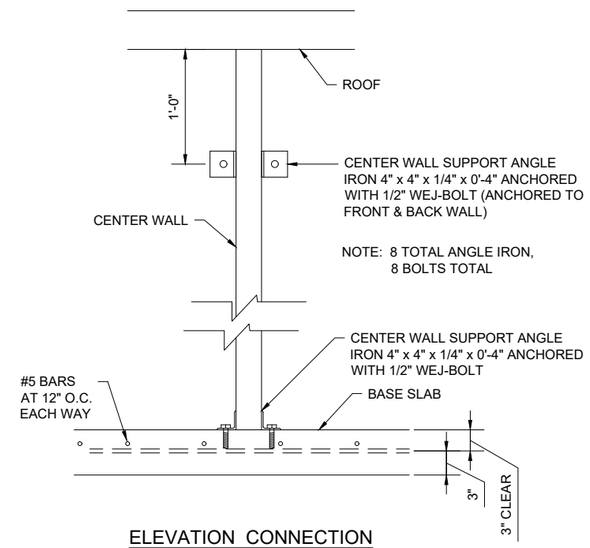

ELEVATION CONNECTION
ANGLE IRON
AT CENTER WALL
NOT TO SCALE

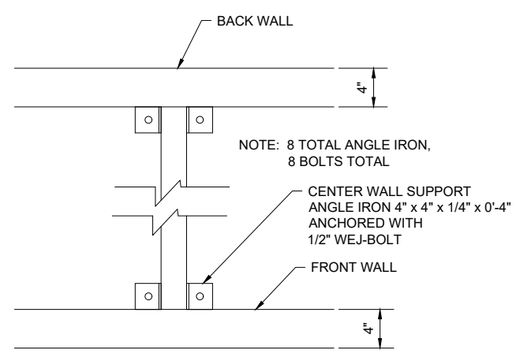

PLAN CONNECTION
ANGLE IRON
AT CENTER WALL
NOT TO SCALE

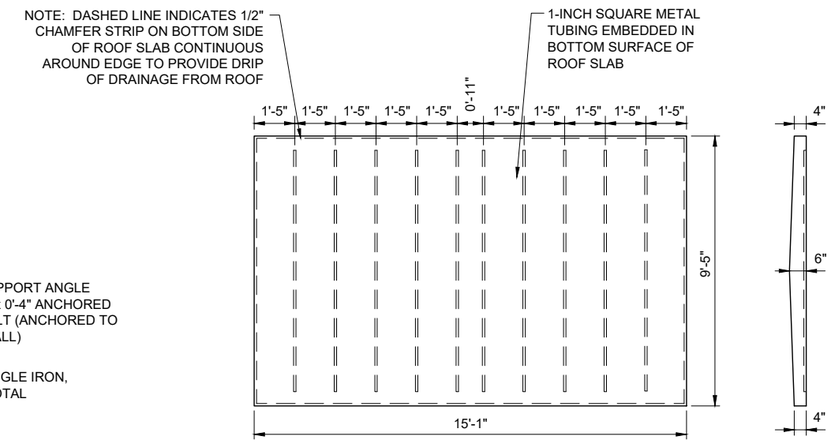

ROOF SLAB
NOT TO SCALE

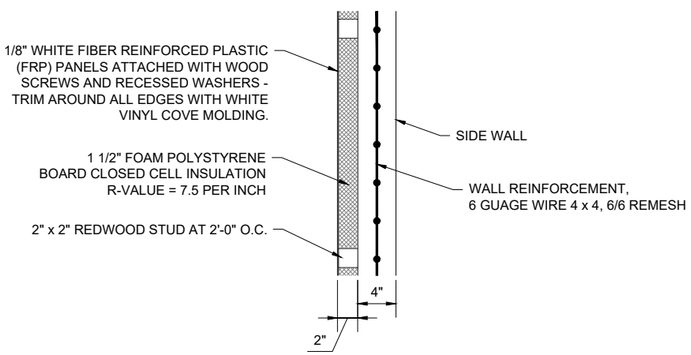

WALL SECTION
DETAIL C
NOT TO SCALE

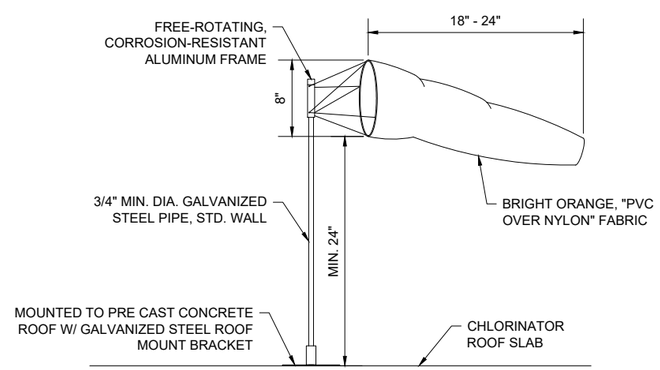

WIND SOCK DETAIL
NOT TO SCALE

Rev #	Date	Description	By	Chk'd

SOUDER, MILLER & ASSOCIATES
Engineering • Environmental • Geomatics
Serving the Southwest & Rocky Mountains
5454 Venice Avenue NE, Suite D
Albuquerque, NM 87113
Phone (505) 294-0942 Toll-Free (877) 294-0942 Fax (505) 293-3430
www.soudermiller.com

THE NAVAJO NATION
McKINLEY COUNTY, NEW MEXICO

THOREAU BACA WELL CONNECTION
SECTION 19, T. 14 N., R. 13 W.
BUILDING DETAILS

FINAL DESIGN FOR REVIEW

THIS DRAWING IS INCOMPLETE AND NOT TO BE USED FOR CONSTRUCTION UNLESS IT IS STAMPED, SIGNED AND DATED

Designed	Drawn	Checked
TTT	AAV	JMG

Date: March 2021
Scale: Horiz: N/A Vert: N/A
Project No: 6922883
Sheet: DT-10

P:\6-Baca-Prewitt (6922883)\Baca Thoreau Well Connection\CAD\DWG\6922883-Thoreau Well Conn Pumphouse.dwg
3/4/2021 1:51:57 PM aav

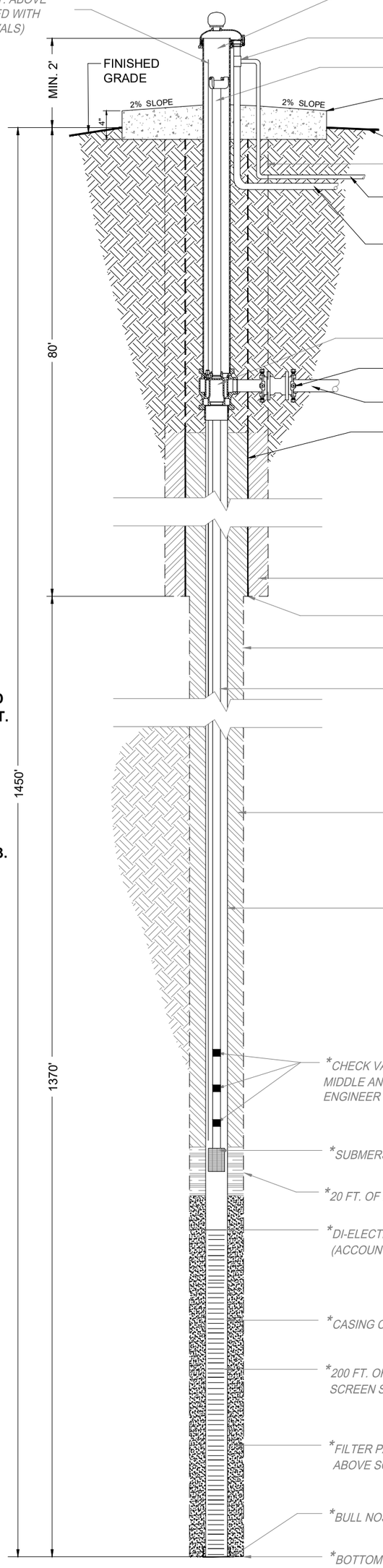

*1" SCHEDULE 40 G.I. SOUNDING TUBE TO 2-FT. ABOVE TOP OF PUMP (ATTACHED WITH BANDS AT 10 FT. INTERVALS)

*BAKER STANDARD INDUSTRIAL PITLESS UNIT W/ WATERTIGHT CAP & SCREENED WELL VENT MODEL: 5PS810WBWE23M4SP (OR EQUIVALENT)

*2" ELECTRICAL CONDUIT TEE

*LIFT-OUT PIPE

4 FT. X 4 FT. SQUARE CONCRETE SLAB SURFACE SEAL (MINIMUM 4" THICK)

GROUND SURFACE: SLOPE TO DRAIN AWAY FROM WELL

*24" DIAMETER (APPROX.) BORE HOLE FROM SURFACE TO 80 FT. B.G.S.

1" PVC ELECTRICAL CONDUIT
(W/ APPROPRIATE CABLE FROM TRANSDUCER TO PUMPHOUSE)

2" PVC ELECTRICAL CONDUIT TO PUMPHOUSE
(W/ APPROPRIATE WIRE FROM SUBMERSIBLE PUMP TO PUMP HOUSE)

*BAKER STANDARD INDUSTRIAL PITLESS UNIT (SPOOL @ 4 FT. B.G.S.)

4" DUCTILE IRON MJ SLEEVE W/ MECHANICAL JOINT RESTRAINTS

4" DUCTILE IRON OUTLET PIPE (TO PUMPHOUSE)

*18" DIAMETER BLACK STEEL SURFACE CASING (0.375-INCH WALL THICKNESS)
(CUT SURFACE CASING AND GROUT TO BELOW PITLESS FOR FINAL SURFACE COMPLETION)

*CEMENT GROUT

*BOTTOM OF 18" DIAMETER STEEL SURFACE CASING @ 80 FT B.G.S.

*14.75" DIAMETER (APPROX.) BORE HOLE FROM 80 FT. TO 1450 FT. B.G.S.

*3" SCH. 40 GALVANIZED DROP PIPE TO PUMP

*CEMENT GROUT BETWEEN WELL CASING AND SURFACE CASING/BOREHOLE FROM APPROX. 5 FT. B.G.S. TO TOP OF UPPER BENTONITE SEAL

*8" DIAMETER SCH. 40 LOW CARBON STEEL WELL CASING

*CHECK VALVES (LOWER CHECK VALVE - 20 FT. ABOVE TOP OF PUMP; MIDDLE AND UPPER CHECK VALVES - PLACE AS DIRECTED BY ENGINEER BETWEEN PUMP & TOP OF WELL)

*SUBMERSIBLE PUMP SET AT APPROXIMATELY 1000 FT. B.G.S.

*20 FT. OF BENTONITE SEAL ABOVE FILTER PACK

*DI-ELECTRIC COUPLING ABOVE LOWER SCREEN
(ACCOUNT FOR LENGTH OF CONNECTORS IN CASING INSTALLATION)

*CASING CENTRALIZERS EVERY 100 FT.

*200 FT. OF 8-INCH DIAMETER 0.050-INCH SLOT 304 STAINLESS STEEL WIRE-WRAPPED SCREEN SET WITHIN SAN ANDRES/GLORIETA FORMATION (APPROX. 1250 TO 1450 FT. B.G.S.)

*FILTER PACK: 8-16 SILICA SAND FROM TOTAL DEPTH TO 10 FT. TO 20 FT. ABOVE SCREENED INTERVAL

*BULL NOSE END-CAP AT BOTTOM OF SCREEN AT 1450 FT. B.G.S.

*BOTTOM OF 14.75" BORE HOLE AT 1450 FT. B.G.S.

NOTES:

1. **DIAGRAM NOT TO SCALE**
2. **ITEMS MARKED WITH AN ASTERISK * ARE NOT INCLUDED IN THIS PHASE OF THE PROJECT. THESE ITEMS ARE EXISTING.**
3. **ADDITIONAL REQUIREMENTS FOR INSTALLATION OF PUMP AND OTHER APPURTENANCES, INCLUDING TERMINATION DOWNHOLE AND AT SURFACE, ARE PROVIDED ON SHEET DT-13.**

Sheet: DT-11
Project No: 6922883
Scale: Horiz: N/A Vert: N/A
Date: March 2021
Designed: TTT | Drawn: AAV | Checked: JMG

THIS DRAWING IS INCOMPLETE AND NOT TO BE USED FOR CONSTRUCTION UNLESS ITS SEALED AND SIGNED

FINAL DESIGN FOR REVIEW

THE NAVAJO NATION — McKINLEY COUNTY, NEW MEXICO

THOREAU BACA WELL CONNECTION
SECTION 19, T. 14 N., R. 13 W.
THOREAU WELL DESIGN DETAIL

SOUDER, MILLER & ASSOCIATES
Engineering • Environmental • Geomatics
Serving the Southwest & Rocky Mountains
5454 Venice Avenue NE, Suite D
Albuquerque, NM 87113
Phone (505) 299-0942 Toll-Free (877) 299-0942 Fax (505) 293-3430
www.soudermiller.com

Rev #	Date	Description	By	Chk'd

P:\6-Baca-Prewitt (6922883)\Baca Thoreau Well Connection\CAD\DWG\6922883-Thoreau Well Conn Pumphouse.dwg
3/4/2021 1:52:07 PM aav

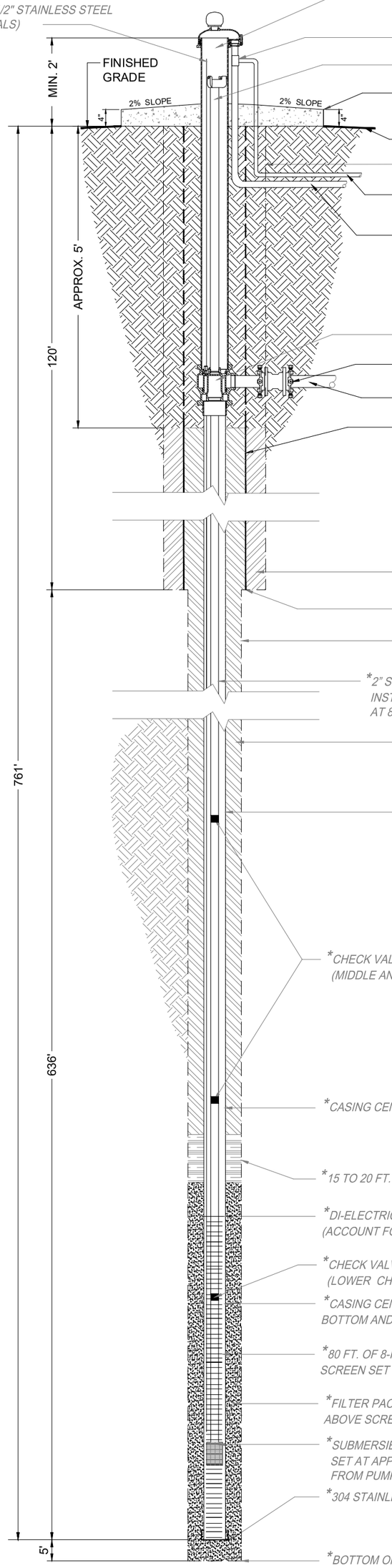

*1" SCHEDULE 40 G.I. TRANSDUCER PIPE TO 2-FT. ABOVE TOP OF PUMP (ATTACHED WITH 1/2" STAINLESS STEEL BANDS AT 10 FT. INTERVALS)

*BAKER STANDARD INDUSTRIAL PITLESS UNIT W/ WATERTIGHT CAP & SCREENED WELL VENT MODEL: 5PS810WBWE02M4SP (OR EQUIVALENT)

*2" ELECTRICAL CONDUIT TEE (BY OTHERS)

*LIFT-OUT PIPE WITH HOOKS

4 FT. X 4 FT. SQUARE CONCRETE SLAB SURFACE SEAL (MINIMUM 4" THICK)

GROUND SURFACE: SLOPE TO DRAIN AWAY FROM WELL

*24" DIAMETER (APPROX.) BORE HOLE FROM SURFACE TO 120 FT. B.G.S.

1" PVC ELECTRICAL CONDUIT (W/ APPROPRIATE CABLE FROM TRANSDUCER TO PUMPHOUSE, BY OTHERS)

2" PVC ELECTRICAL CONDUIT TO PUMPHOUSE (W/ APPROPRIATE WIRE TO PUMP HOUSE) (BY OTHERS)

*BAKER STANDARD INDUSTRIAL PITLESS UNIT (SPOOL @ 4 FT. B.G.S.)

4" DUCTILE IRON MJ SLEEVE W/ MECHANICAL JOINT RESTRAINTS

4" DUCTILE IRON OUTLET PIPE (TO PUMPHOUSE) (BY OTHERS)

*18" DIAMETER BLACK STEEL SURFACE CASING (0.375-INCH WALL THICKNESS) (CUT SURFACE CASING AND GROUT TO BELOW PITLESS FOR FINAL SURFACE COMPLETION)

*CEMENT GROUT

*BOTTOM OF 18" DIAMETER STEEL SURFACE CASING @ 120 FT B.G.S.

*14.75" DIAMETER (APPROX.) BORE HOLE FROM 120 FT. TO 761 FT. B.G.S.

*2" SCH. 40 GALVANIZED DROP PIPE WITH API COUPLINGS TO PUMP INSTALL HINGE TYPE CENTRALIZERS ACROSS THE DROP PIPE COUPLINGS AT 80' INTERVALS OR AS DIRECTED BY ENGINEER

*CEMENT GROUT BETWEEN WELL CASING AND SURFACE CASING/BOREHOLE FROM APPROX. 5 FT. B.G.S. TO TOP OF BENTONITE SEAL

*8" DIAMETER SCH. 40 LOW CARBON STEEL WELL CASING

*CHECK VALVES (FLOMATIC MODEL 80DI) (MIDDLE AND UPPER SPACED EVENLY BETWEEN PUMP AND TOP OF WELL)

*CASING CENTRALIZERS APPROXIMATELY EVERY 100 FT

*15 TO 20 FT. OF BENTONITE SEAL ABOVE FILTER PACK

*DI-ELECTRIC COUPLING ABOVE SCREEN (ACCOUNT FOR LENGTH IN CASING INSTALLATION)

*CHECK VALVE (FLOMATIC MODEL 80DI) (LOWER CHECK VALVE, 20 FT ABOVE TOP OF PUMP)

*CASING CENTRALIZERS APPROXIMATELY EVERY 100 FT INCLUDING AT BOTTOM AND TOP OF SCREEN INTERVAL.

*80 FT. OF 8-INCH DIAMETER 0.050-INCH SLOT 304 STAINLESS STEEL WIRE-WRAPPED SCREEN SET WITHIN SONSELA FORMATION (APPROX. 676 TO 756 FT. B.G.S.)

*FILTER PACK: 8-16 SILICA SAND FROM TOTAL DEPTH TO 10 FT. TO 20 FT. ABOVE SCREENED INTERVAL

*SUBMERSIBLE PUMP WITH SHROUD AND INTEGRAL CHECK VALVE SET AT APPROXIMATELY 730 FT. B.G.S. INSTALL AND SECURE PUMP WIRE FROM PUMP ASSEMBLY TO SURFACE WITH 10 FEET COILED WITHIN PITLESS.

*304 STAINLESS STEEL BULL NOSE END-CAP AT BOTTOM OF SCREEN AT 756 FT. B.G.S.

*BOTTOM OF 14.75" BORE HOLE AT 761 FT. B.G.S. (5' OF OVERDRILL BELOW CASING)

NOTES:

1. **DIAGRAM NOT TO SCALE**
2. **ITEMS MARKED WITH AN ASTERISK * ARE NOT INCLUDED IN THIS PHASE OF THE PROJECT. THESE ITEMS ARE EXISTING.**
3. **ADDITIONAL REQUIREMENTS FOR INSTALLATION OF PUMP AND OTHER APPURTENANCES, INCLUDING TERMINATION DOWNHOLE AND AT SURFACE, ARE PROVIDED ON SHEET DT-13.**

Sheet: DT-12
Project No: 6922883
Scale: Horiz: N/A Vert: N/A
Date: March 2021
Designed: TTT | Drawn: AAV | Checked: JMG
THIS DRAWING IS INCOMPLETE AND NOT TO BE USED FOR CONSTRUCTION UNLESS IT IS SIGNED AND SEALED

FINAL DESIGN FOR REVIEW

THE NAVAJO NATION — McKINLEY COUNTY, NEW MEXICO

THOREAU BACA WELL CONNECTION
SECTION 19, T. 14 N., R. 13 W.
SONSELA WELL DESIGN DETAIL

SOUDER, MILLER & ASSOCIATES
Engineering • Environmental • Geomatics
Serving the Southwest & Rocky Mountains
5454 Venice Avenue NE, Suite D
Albuquerque, NM 87113
Phone (505) 299-0942 Toll-Free (877) 299-0942 Fax (505) 293-3430
www.soudermiller.com

Rev #	Date	Description	By	Chk'd

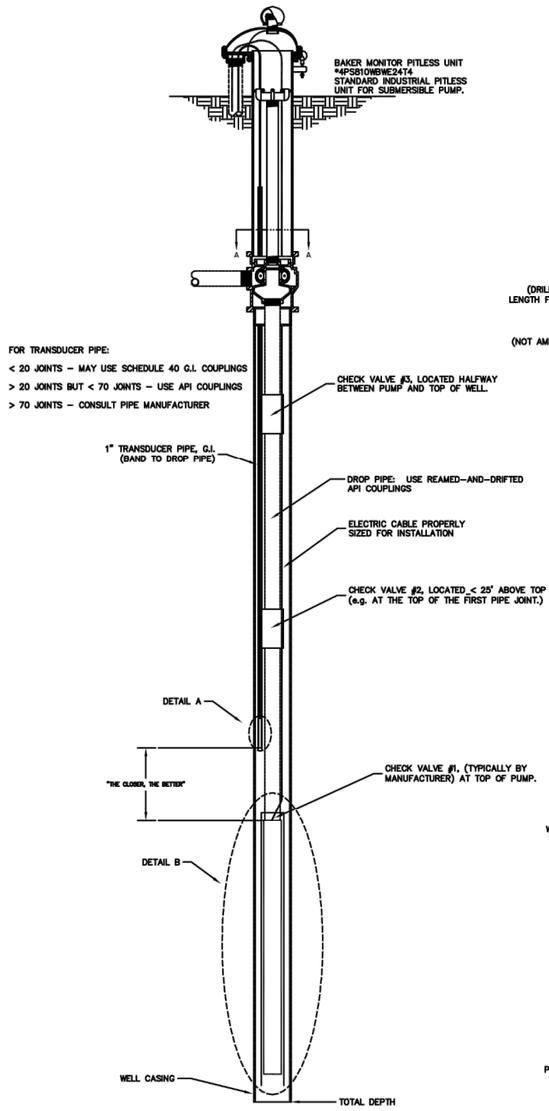

SECTION A-A

TYP. SUBMERSIBLE PITLESS
UNIT CABLE ROUTING

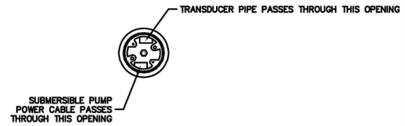

DETAIL A - TRANSDUCER

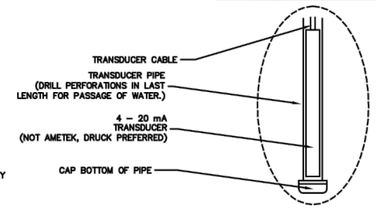

TRANSDUCER INSTALLATION:

1.) DO NOT DISASSEMBLE THE TRANSDUCER OR LOOSEN THE COMPRESSION NUT AT THE SIGNAL CABLE ENTRY. THIS WILL VOID WARRANTY. THERE ARE NO CUSTOMER SERVICEABLE COMPONENTS INSIDE.

2.) DO NOT NICK OR CUT THE JACKET OF THE SIGNAL CABLE. THIS WILL CAUSE LEAKAGE & VOID WARRANTY. AVOID ROLLING THE CABLE SPOOL OVER THE ROCKS, STONES, & OTHER SHARP OBJECTS.

3.) CONNECT THE TRANSDUCER SIGNAL CABLE LEADS TO THE CORRECT TERMINALS ON THE METER OR TRANSMITTER WHICH IS TO BE USED WITH THE TRANSDUCER TO INSURE PROPER OPERATION. DISCONNECT THE SIGNAL CABLE LEADS FROM THE METER OR TRANSMITTER BEFORE INSTALLING THE TRANSDUCER OR CABLE IN WELL OR TANK. DO NOT CONNECT THE SIGNAL CABLE LEADS TO ANY OTHER POWER SOURCE.

4.) HANDLE THE SIGNAL CABLE & TRANSDUCER WITH CARE DURING INSTALLATION.

5.) CONNECT TRANSDUCER PIPE TO THE DROP PIPE WITH ½" STAINLESS STEEL BANDS. CONNECT ELECTRIC CABLE TO THE DROP PIPE SEPARATELY.

DETAIL B - FLOW INDUCER SLEEVE

(NOT NECESSARY ON ALL INSTALLATIONS.
SEE MOTOR MANUFACTURER SPECIFICATIONS.)

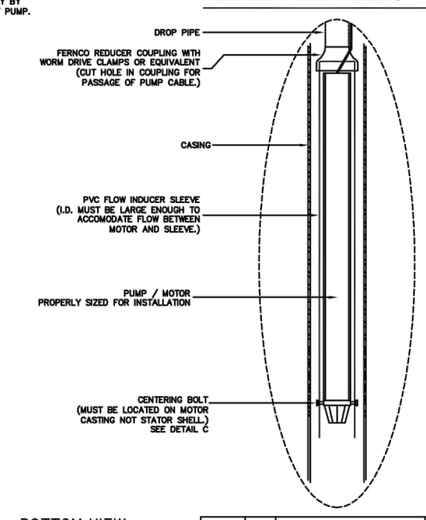

NOTES:

1.) INSTALL WATER LEVEL TRANSDUCER INSIDE TRANSDUCER PIPE.

2.) USE FLO–MATIC SPRING LOADED CHECK VALVES, MODEL 80 D.I. (400 PSI & 180°F MAX)

3.) DEEP INSTALLATIONS COMBINED WITH HIGH HEAD MAY EXCEED PUMP, DROP PIPE, OR CHECK VALVE RATINGS.

DETAIL C - BOTTOM VIEW OF SLEEVE

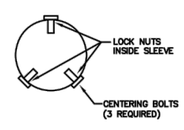

REVISION	DATE	BRIEF	BY
1	05/2006	TRANSDUCER & FLOW INDUCER/INSTALL #5	MR/MV

U.S. DEPARTMENT OF HEALTH AND HUMAN SERVICES
PUBLIC HEALTH SERVICE
INDIAN HEALTH SERVICE
NAVAJO NATION

NAVAJO NATION

STANDARD DRAWING NO. W–30
TYPICAL WATER WELL INSTALLATION

OFFICE OF ENVIRONMENTAL HEALTH AND ENGINEERING
NAVAJO AREA OFFICE, WINDOW ROCK, ARIZONA

DRAWN BY: LDS	CHECKED BY: RSM	APPR. BY:	AUTOCAD
DATE: 6/03	DATE: 6/03	DATE:	PITLESS1.DWG

SHEET OF

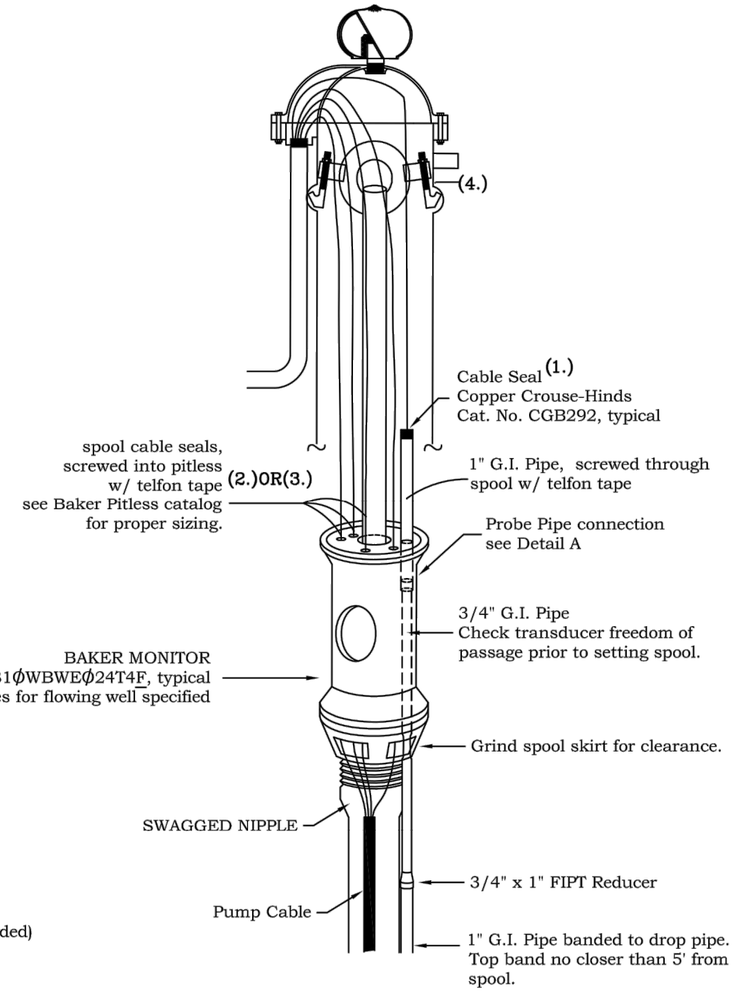

DETAIL A

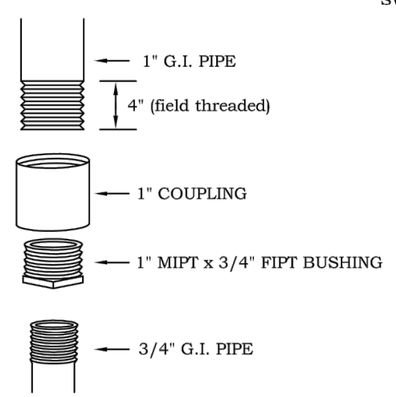

DESCRIPTION	BRAND	RATING
1. CABLE SEAL	COOPER CROUSE–HINDS	40 PSI (FIELD VERIFIED) > 40 PSI (UNVERIFIED)
2. CABLE SEAL	BAKER MONITOR	60–70 PSI
3. CABLE SEAL	PAVE TECHNOLOGY	3,000 PSI
4. LIFT OUT HOOKS	BAKER MONITOR	HOLD WEIGHT = 30,000 LBS
5. SCH 40 GI PIPE		700 PSI
6. SPOOL SEAL	BAKER MONITOR	300 PSI

REVISION	DATE	BRIEF	BY
1	2/06	STANDARDIZED	K.M.

U.S. DEPARTMENT OF HEALTH AND HUMAN SERVICES
PUBLIC HEALTH SERVICE
INDIAN HEALTH SERVICE
NAVAJO NATION

NAVAJO NATION,

STANDARD DRAWING W–30A
WATER WELL PITLESS CONFIGURATION–FLOWING WELLS

OFFICE OF ENVIRONMENTAL HEALTH AND ENGINEERING
NAVAJO AREA OFFICE, WINDOW ROCK, ARIZONA

DRAWN BY: D.H.	CHECKED BY: A.E.	APPR. BY: D.S.	AUTOCAD
DATE: 8/05	DATE: 8/05	DATE: 2/06	DRAWING

Rev #	Date	Description	By	Ck'd

SOUDER, MILLER & ASSOCIATES
Engineering • Environmental • Geomatics
Serving the Southwest & Rocky Mountains
5454 Venice Avenue NE, Suite D
Albuquerque, NM 87113
Phone (505) 294-0942 Toll-Free (877) 294-0942 Fax (505) 293-3430
www.soudermiller.com

THE NAVAJO NATION McKINLEY COUNTY, NEW MEXICO

THOREAU BACA WELL CONNECTION
SECTION 19, T. 14 N., R. 13 W.
STANDARD WELL DETAILS

STANDARD DRAWING

THIS DRAWING IS INCOMPLETE AND NOT TO BE USED FOR CONSTRUCTION UNLESS IT IS STAMPED, SIGNED AND DATED.

Designed	Drawn	Checked
TTT	AAV	JMG

Date: March 2021

Scale: Horiz: N/A
Vert: N/A

Project No: 6922883

Sheet: DT-13

P:\6-Baca-Prewitt (6922883)\Baca Thoreau Well Connection\CAD\DWG\6922883-Thoreau Well Conn Pumphouse.dwg
3/4/2021 1:52:13 PM aav

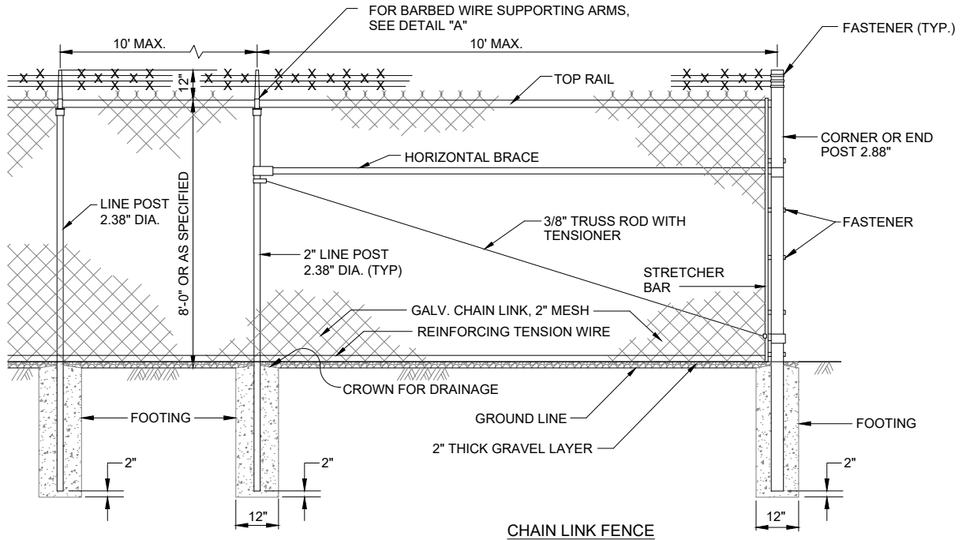

CHAIN LINK FENCE

NOT TO SCALE

NOTES:

1. AT BROW CROSSING, EMBED ON 6" CENTERS, 4-11/2" x 24" GALVANIZED RODS WITH 2" HOOKED END INTO BROW DITCH CONCRETE. EXPOSED END OF ROD SHALL BE WOVEN INTO FENCE FABRIC.
2. IMBED BOTTOM OF FABRIC MIN. 1" INTO THE 2" THICK GRAVEL LAYER.

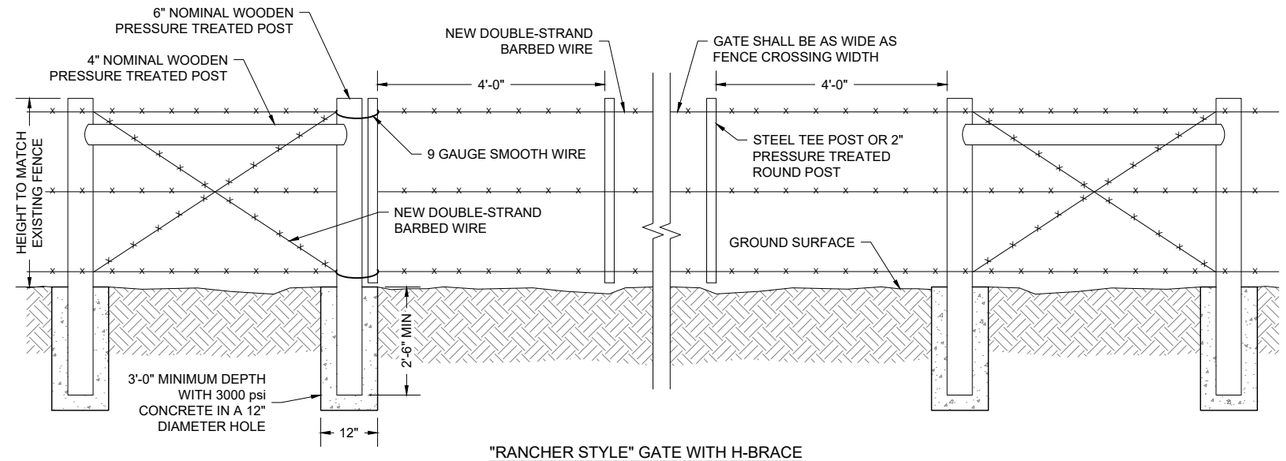

"RANCHER STYLE" GATE WITH H-BRACE PULL ASSEMBLY AT FENCE CROSSING

NOT TO SCALE

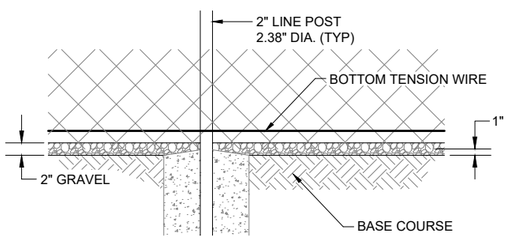

BASE COURSE AND GRAVEL DETAIL

NOT TO SCALE

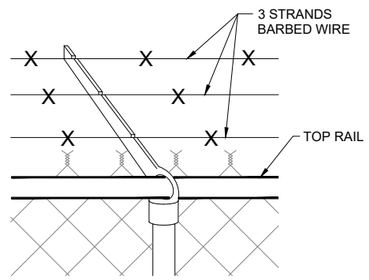

DETAIL "A" SUPPORTING ARM & BARBED WIRE

NOT TO SCALE

GATE POST

GATE LEAF WIDTH	GATE POST (OD)	FABRIC HEIGHT	"A" DIAM	"B" DEPTH	"C" POST EMBED.
10'	4"	8'	16"	56"	54"

LINE AND TERMINAL POSTS

FABRIC HEIGHT	TYPE POST	"A" DIAM	"B" DEPTH	"C" POST EMBED.
8'-0"	LINE	12"	38"	36"
	TERMINAL	12"	38"	36"

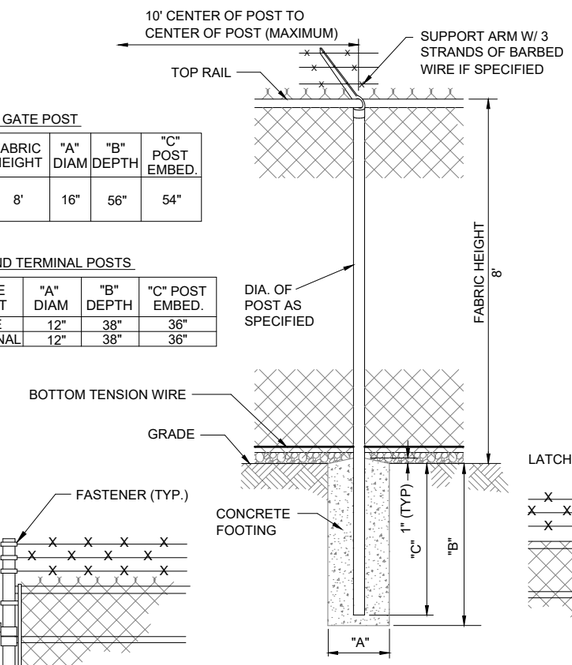

CHAIN LINK FENCE FOUNDATION

NOT TO SCALE

NOTES:

1. COMMON LOCKS SHALL BE PROVIDED FOR ALL FENCE GATES
2. TERMINAL POSTS INCLUDE END, CORNER, AND PULL POSTS

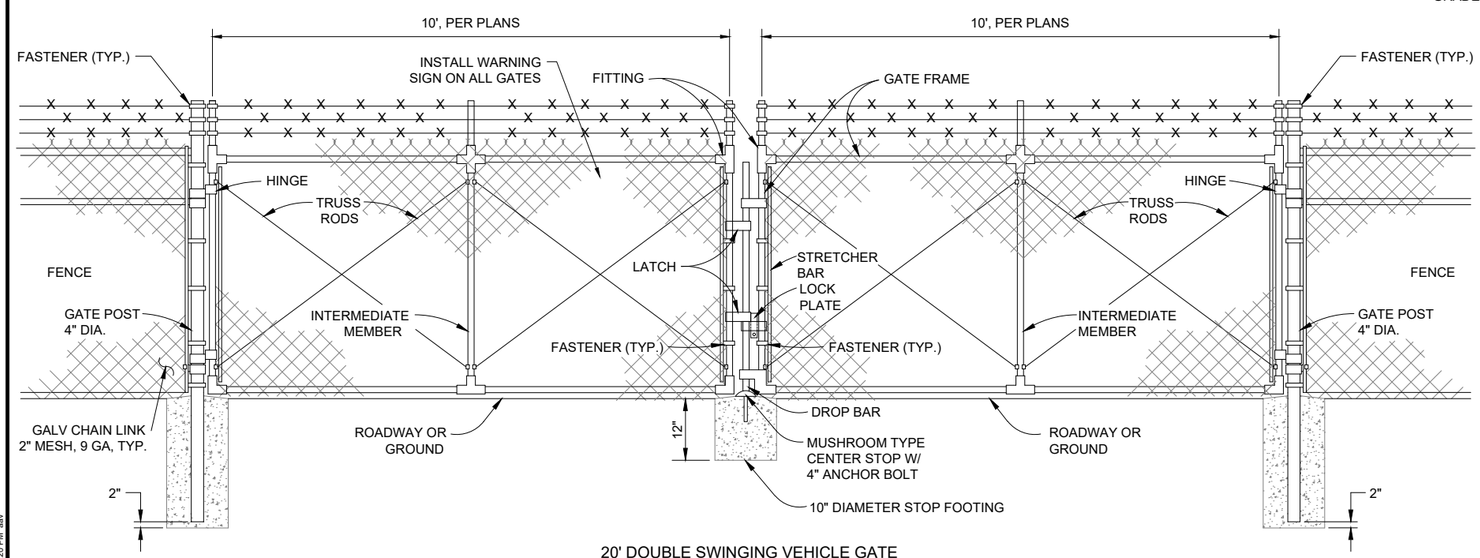

20' DOUBLE SWINGING VEHICLE GATE

NOT TO SCALE

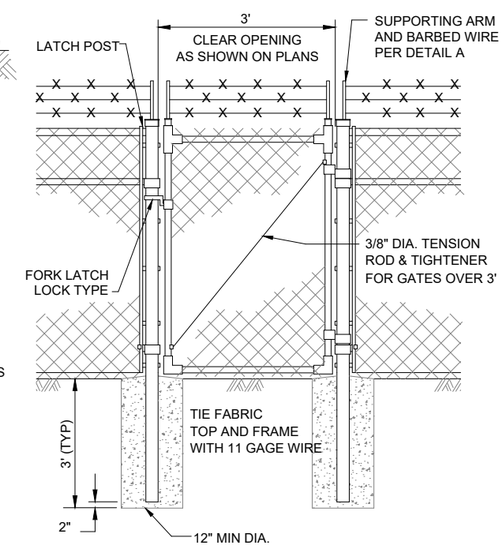

PEDESTRIAN GATE

NOT TO SCALE

Rev #	Date	Description	By	Chk'd

SOUDER, MILLER & ASSOCIATES
Engineering • Environmental • Geomatics
Serving the Southwest & Rocky Mountains
5454 Venice Avenue NE, Suite D
Albuquerque, NM 87113
Phone (505) 294-0942 Toll-Free (877) 294-0942 Fax (505) 293-3430
www.soudermiller.com

THE NAVAJO NATION — McKINLEY COUNTY, NEW MEXICO

THOREAU BACA WELL CONNECTION
SECTION 19, T. 14 N., R. 13 W.
FENCE DETAIL

FINAL DESIGN FOR REVIEW

THIS DRAWING IS INCOMPLETE AND NOT TO BE USED FOR CONSTRUCTION UNLESS IT IS STAMPED, SIGNED AND DATED

Designed	Drawn	Checked
TTT	AAV	JMG

Date: March 2021

Scale: Horiz: NONE Vert: N/A

Project No: 6922883

Sheet: DT-14

P:\6-Baca-Prewitt (6922883)\Baca Thoreau Well Connection\CAD\DWG\6922883-Thoreau Well Conn Fence Details.dwg
3/4/2021 1:52:20 PM aav

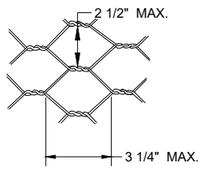

TWISTED MESH MATTRESS

NOT TO SCALE

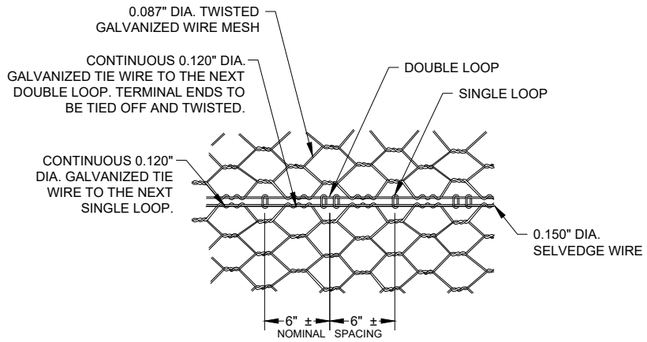

STANDARD JOINT CONNECTION DETAIL

NOT TO SCALE

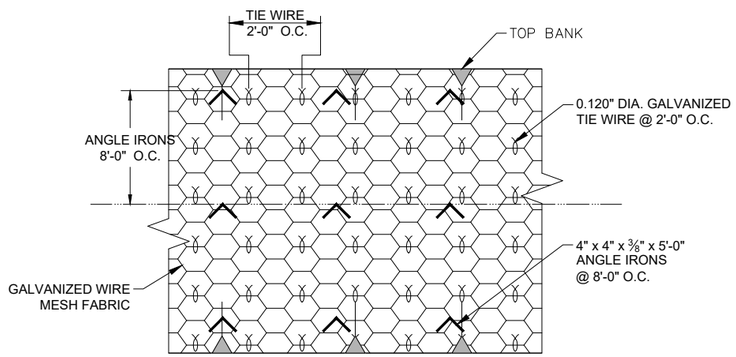

TYP. 12" RIP-RAP CAGE & ANCHORING

NOT TO SCALE

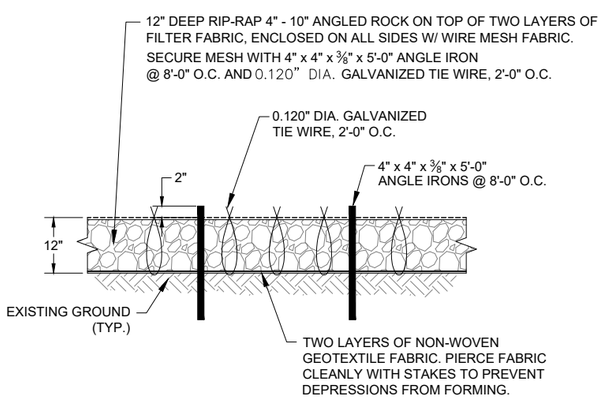

CROSS SECTION

TYPICAL 12" RIP-RAP DETAIL

NOT TO SCALE

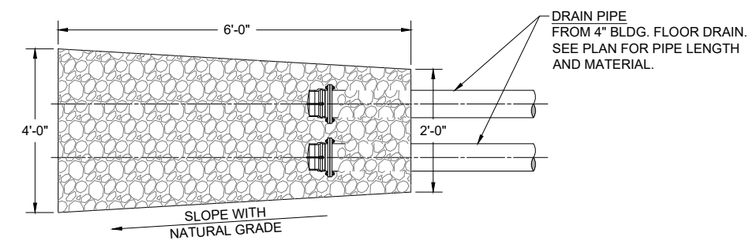

PLAN VIEW

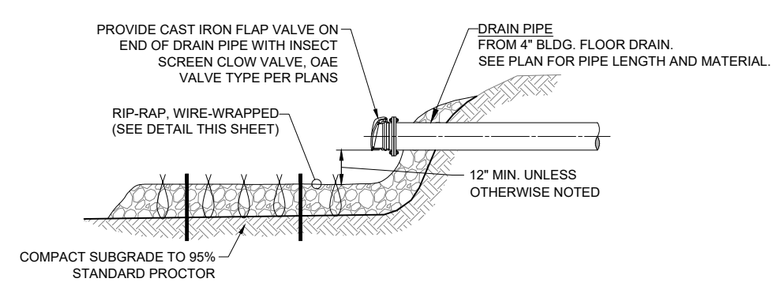

ELEVATION VIEW

TYPICAL SPLASH PAD DETAIL

NOT TO SCALE

Rev #	Date	Description	By	Chk'd

SOUDER, MILLER & ASSOCIATES
Engineering • Environmental • Geomatics
Serving the Southwest & Rocky Mountains
5454 Venice Avenue NE, Suite D
Albuquerque, NM 87113
Phone (505) 294-0942 Toll-Free (877) 294-0942 Fax (505) 293-3430
www.soudermiller.com

THE NAVAJO NATION McKINLEY COUNTY, NEW MEXICO

THOREAU BACA WELL CONNECTION
SECTION 19, T. 14 N., R. 13 W.
EROSION CONTROL DETAILS

FINAL DESIGN FOR REVIEW

THIS DRAWING IS INCOMPLETE AND NOT TO BE USED FOR CONSTRUCTION UNLESS IT IS STAMPED, SIGNED AND DATED

Designed	Drawn	Checked
TTT	AAV	JMG

Date: March 2021

Scale: Horiz: N/A Vert: N/A

Project No: 6922883

Sheet: DT-15

P:\6-Baca-Prewitt (6922983)\Baca Thoreau Well Connection\CAD\DWG\6922883-Thoreau Well Conn Details.dwg
3/4/2021 1:52:30 PM aav

CONTROL ROOM

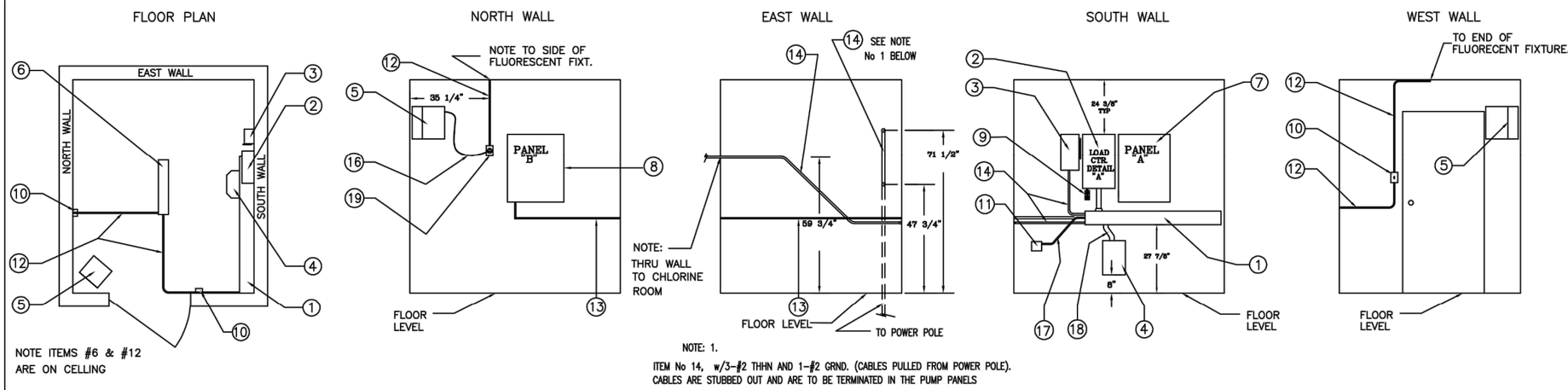

NOTE: 1.
ITEM No 14, w/3-#2 THHN AND 1-#2 GRND. (CABLES PULLED FROM POWER POLE).
CABLES ARE STUBBED OUT AND ARE TO BE TERMINATED IN THE PUMP PANELS

BILL OF MATERIAL CONTROL ROOM

ITEM	DESCRIPTION	QTY.	BRAND, MODEL, SIZE
1	GUTTER	1	6 x 60" x 6-3/8
2	LOAD CENTER W/100 AMP MAIN BREAKER	1	SQUARE D Q 016M 100 RB 22-1/8 x 14-3/8 x 5-1/4
3	DISC SW W/HANDLE W/FRS-30R FUSES	1	SQUARE D H 361 NRB 15-1/8 x 6-3/8 x 4-1/4
4	TRANSFORMER	1	ACME # T253517-3S 15 x 12 x 12 15KVA, 3PH, 460/240-120 VAC
5	HEATER, 220V, 4000 WATT	1	DAYTON # 3UG52 11 x 10-1/2 x 9-3/4
6	FLUORESCENT LIGHT	1	4-1/2 W x 48 LONG
7	PROPOSED PANEL "A"	1	HONEYWELL # L404B-1353 4-1/2 x 3 x 2
8	PROPOSED PANAL "B"	1	SAGINAW # SCE-362410LP 36H x 24W x 10D NEMA 12
9	DUPLEX RECPT - 120V	1	4-1/2 x 3 x 2
10	LIGHT SWITCH	1	4-1/2 x 3 x 2
11	PRESSURE SWITCH, DPDT	1	HONEYWELL # L404B-1353 4-1/2 x 3 x 2
12	1/2" RIDGID CONDUIT	As Req	X
13	3/4" RIDGID CONDUIT	As Req	X
14	1" RIDGID CONDUIT	As Req	X
15	2" RIDGID CONDUIT	As Req	X
16	# 14/3 SJT CORD	As Req	X
17	1/2" SEALTITE	As Req	X
18	2" SEALTITE	As Req	X
19	SINGLE RECPT - 220V	1	4-1/2 x 3 x 2

CHLORINE ROOM

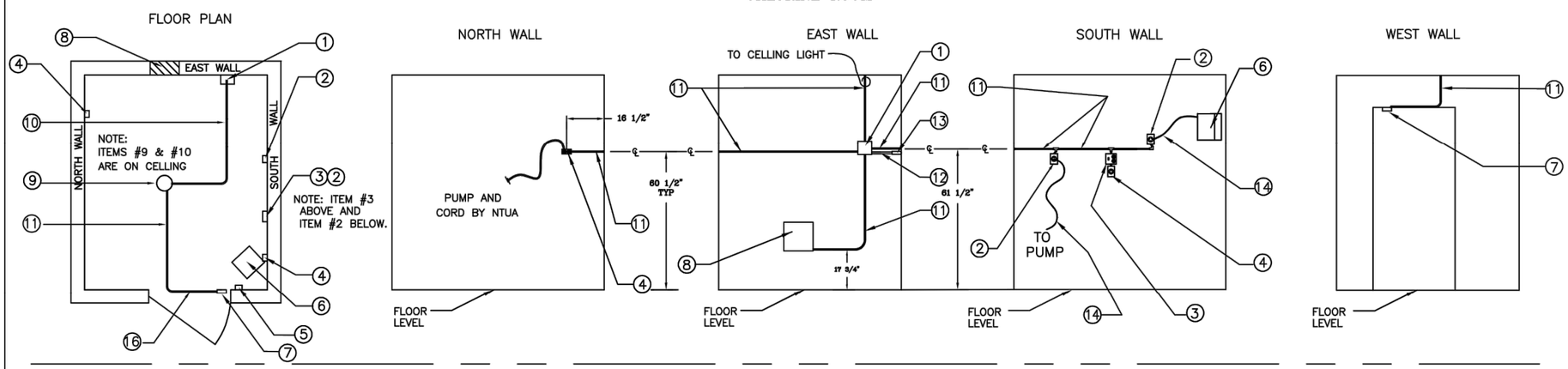

BILL OF MATERIAL CHLORINE ROOM

ITEM	DESCRIPTION	QTY.	BRAND, MODEL, SIZE
1	JCT BOX	1	6 x 6 x 4
2	ONE GANG REC. BOX, 220V	1	4-1/2 x 3 x 2
3	TWO GANG DUP RECP W/SP SW	1	4-1/2 x 4-1/2 x 2
4	ONE GANG RECP BOX, 120V	1	4-1/2 x 3 x 2
5	ONE GANG SW BOX, S/P	1	4-1/2 x 3 x 2
6	HEATER, 220V	1	DAYTON # 3UG52 11 x 10-1/2 x 9-3/4
7	DOOR SWITCH (LIMIT) FOR EXHAUST FAN	1	CUTLER HAMMER # E50 AR/E50 KL25 4 x 1-1/2 x 2
8	EXHAUST FAN, (BY CUSTOMER)	1	12-1/2 x 12-3/4 x THRU WALL
9	VAPOR TITE LIGH FIXT, 100W	1	X
10	1/2" RIDGID CONDUIT	As Req	X
11	3/4" RIDGID CONDUIT	As Req	X
12	1" RIDGID CONDUIT	As Req	X
13	1" SEALOFF (To Ctrl Room)	As Req	X
14	#16/3 S/O CORD	As Req	X
15	# 14/3 SJT CORD	As Req	X
16	1/2" SEALTITE	As Req	X

LOAD CENTER DETAIL "A"

LOAD CENTER CIRCUITS, BREAKER LOCATION & BKR/CAT No.

SPACE No.	BREAKER FOR	AMP	POLES	SPACE No.	BREAKER FOR	AMP	POLES
1	PUMP CONTRL	QO 115	SP	2	BOOSTER	QO 315	3P
3	CONTROL RM LIGHTS	QO 115	SP	4	CHEMICAL		
5	CHLORINE RM LIGHTS	QO 115	SP	6	PUMPS		
7	CONTROL ROOM HEATER	QO 215	DP	8	CHLORINE ROOM HEATER	QO 215	DP
9				10			
11	RECEPTACLE - 120 V	QO 115	SP	12	SPACE		
13	SPACE			14	SPACE		
15	SPACE			16	SPACE		

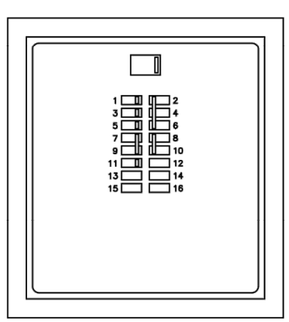

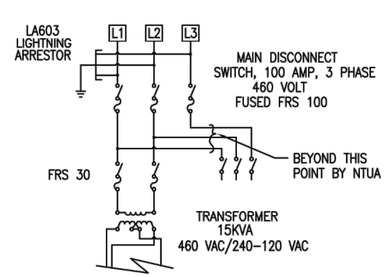

LOAD CENTER CIRCUIT

SMA: LAYOUT IS TYPICAL. COORDINATE ORIENTATION OF SITE AND BUILDING ELECTRICAL IN FIELD. SEE SHEET C-4 FOR PRELIMINARY SITE ELECTRICAL LAYOUT.

REVISION	DATE	DESCRIPTION	BY

U.S. DEPARTMENT OF HEALTH AND HUMAN SERVICES
PUBLIC HEALTH SERVICE
INDIAN HEALTH SERVICE
NAVAJO NATION

PUMP HOUSE LAYOUT

PUBLIC LAW 86-121
OFFICE OF ENVIRONMENTAL HEALTH AND ENGINEERING
NAVAJO AREA INDIAN HEALTH SERVICE

DRAWN BY: PLENCAD DATE: 9/19/97	CHECKED BY: M.N. DATE: 1/16/98	SURVEYED BY: DATE:	AUTOCAD DRAWING
FARMINGTON FIELD OFFICE FARMINGTON, NEW MEXICO	FILENAME: HARBOR PUMP SHEE5.dwg UPDATED: 1/16/98	SHEET 1 OF 2 TOTAL SHEETS	

Rev #	Date	Description	By	Chk'd

SOUDER, MILLER & ASSOCIATES
Engineering • Environmental • Geomatics
Serving the Southwest & Rocky Mountains
5454 Venice Avenue NE, Suite D
Albuquerque, NM 87113
Phone (505) 294-0942 Toll-Free (877) 294-0942 Fax (505) 293-3430
www.soudermiller.com

THE NAVAJO NATION
McKINLEY COUNTY, NEW MEXICO

THOREAU BACA WELL CONNECTION
SECTION 19, T. 14 N., R. 13 W.
PUMP HOUSE LAYOUT (1 OF 2)

STANDARD DRAWING

THIS DRAWING IS INCOMPLETE AND NOT TO BE USED FOR CONSTRUCTION UNLESS IT IS STAMPED, SIGNED AND DATED

Designed	Drawn	Checked
TTT	AAV	JMG

Date: March 2021
Scale: Horiz: N/A Vert: N/A
Project No: 6922883
Sheet: E-1

P:\6-Baca-Prewitt (6922983)\Baca Thoreau Well Connection\CAD\DWG\6922883-Thoreau Well Conn Electrical.dwg
3/4/2021 1:52:37 PM aav

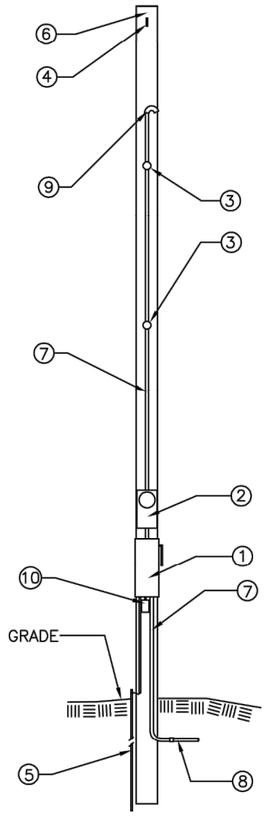

POWER POLE

PLOT PLAN

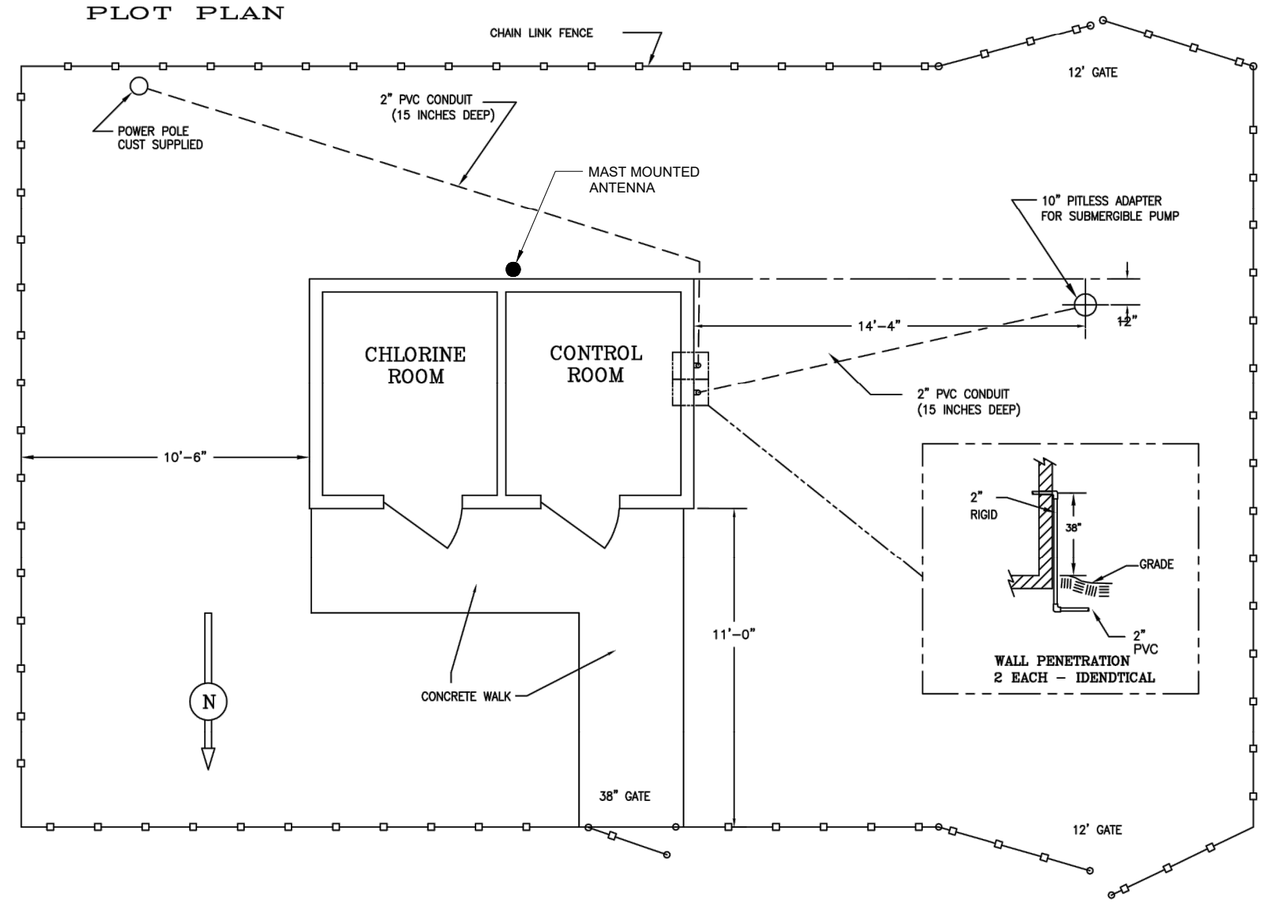

BILL OF MATERIAL POWER POLE

ITEM	DESCRIPTION	QTY.	BRAND, MODEL, SIZE
1	R/T DISCONNECT FRS-100R W/FUSES	1	SQUARE D 100 AMP # 361 NRB 15-1/8 x 6-3/8 x 4-1/4
2	METER SOCKET, 7 TERM, 3 PHASE	1	DURHAM # R6821-7N-N 22-1/8 x 14-3/8 x 5-1/4
3	STAND OFFS	1	15-1/8 x 6-3/8 x 4-1/4
4	EYEBOLT	1	15 x 12 x 12
5	GROUND ROD	1	5/8 DIA x 10 FT LG
6	POLE	1	8 in DIA x 25 ft LONG BY CUST
7	2" RIDGID CONDUIT	As Req	
8	2" PVC	As Req	
9	ENTRANCE HEAD	1	
10	LIGHTNING ARRESTOR	1	DELTA LIGHTNING ARRESTOR Co. # LA603

SMA: LAYOUT IS TYPICAL. COORDINATE ORIENTATION OF SITE AND BUILDING ELECTRICAL IN FIELD. SEE SHEET C-4 FOR PRELIMINARY SITE ELECTRICAL LAYOUT.

REVISION	DATE	DESCRIPTION	BY

U.S. DEPARTMENT OF HEALTH AND HUMAN SERVICES
PUBLIC HEALTH SERVICE
INDIAN HEALTH SERVICE
NAVAJO NATION

PUMP HOUSE LAYOUT

PUBLIC LAW 86-121
OFFICE OF ENVIRONMENTAL HEALTH AND ENGINEERING
NAVAJO AREA INDIAN HEALTH SERVICE

DRAWN BY: PLOTCAD DATE: 9/19/97	CHECKED BY: M.N. DATE: 1/16/98	SURVEYED BY: DATE:	AUTOCAD DRAWING
FARMINGTON FIELD OFFICE FARMINGTON, NEW MEXICO	FILENAME: CARSON PUMP HSES.dwg UPDATED: 1/16/98	SHEET 2 OF 2 TOTAL SHEETS	

Rev #	Date	Description	By	Ckk'd

SOUDER, MILLER & ASSOCIATES
Engineering • Environmental • Geomatics
Serving the Southwest & Rocky Mountains
5454 Venice Avenue NE, Suite D
Albuquerque, NM 87113
Phone (505) 294-0942 Toll-Free (877) 294-0942 Fax (505) 293-3430
www.soudermiller.com

THE NAVAJO NATION
McKINLEY COUNTY, NEW MEXICO

THOREAU BACA WELL CONNECTION
SECTION 19, T. 14 N., R. 13 W.
PUMP HOUSE LAYOUT (2 OF 2)

STANDARD DRAWING

THIS DRAWING IS INCOMPLETE AND NOT TO BE USED FOR CONSTRUCTION UNLESS IT IS STAMPED, SIGNED AND DATED

Designed	Drawn	Checked
TTT	AAV	JMG

Date: March 2021
Scale: Horiz: N/A Vert: N/A
Project No: 6922883
Sheet: E-2

P:\6-Baca-Prewitt (6922883)\Baca Thoreau Well Connection\CAD\DWG\6922883-Thoreau Well Conn Electrical.dwg
3/4/2021 1:32:42 PM aav

NAVAJO TRIBAL UTILITY AUTHORITY
PUMP CONTROL PANEL LAYOUT

SOFT START PUMP PANEL

SCHEDULE OF DRAWINGS

SHEET	FILENAME	TITLE	NOTES
1	SS_CV	COVERSHEET	SHEDULE OF DRAWINGS
2	SS_LOG	LOGIC WIRING	WIRING
3	SS_BP_*HP	GEN ARRANGEMENT	BACKPLANE LAYOUT

NO.	DATE	DESCRIPTION	BY

NAVAJO TRIBAL UTILITY AUTHORITY

SCALE: NONE

DATE:

DRN.: CHK.:

APVD.:

TITLE: 3 PHASE – SOFT START PUMP PANEL COVER SHEET

SHEET 1 OF 3

Rev #	Date	Description	By	Ck'd

SOUDER, MILLER & ASSOCIATES
Engineering • Environmental • Geomatics
Serving the Southwest & Rocky Mountains
5454 Venice Avenue NE, Suite D
Albuquerque, NM 87113
Phone (505) 294-0942 Toll-Free (877) 294-0942 Fax (505) 293-3430
www.soudermiller.com

THE NAVAJO NATION
McKINLEY COUNTY, NEW MEXICO

THOREAU BACA WELL CONNECTION
SECTION 19, T. 14 N., R. 13 W.
SOFT START PUMP PANEL (1 OF 3)

STANDARD DRAWING

THIS DRAWING IS INCOMPLETE AND NOT TO BE USED FOR CONSTRUCTION UNLESS IT IS STAMPED, SIGNED AND DATED

Designed	Drawn	Checked
TTT	AAV	JMG

Date: March 2021

Scale: Horiz: N/A
Vert: N/A

Project No: 6922883

Sheet: E-3

P:\6-Baca-Prewitt (6922883)\Baca Thoreau Well Connection\CAD\DWG\6922883-Thoreau Well Conn Electrical.dwg
3/4/2021 1:52:47 PM aav

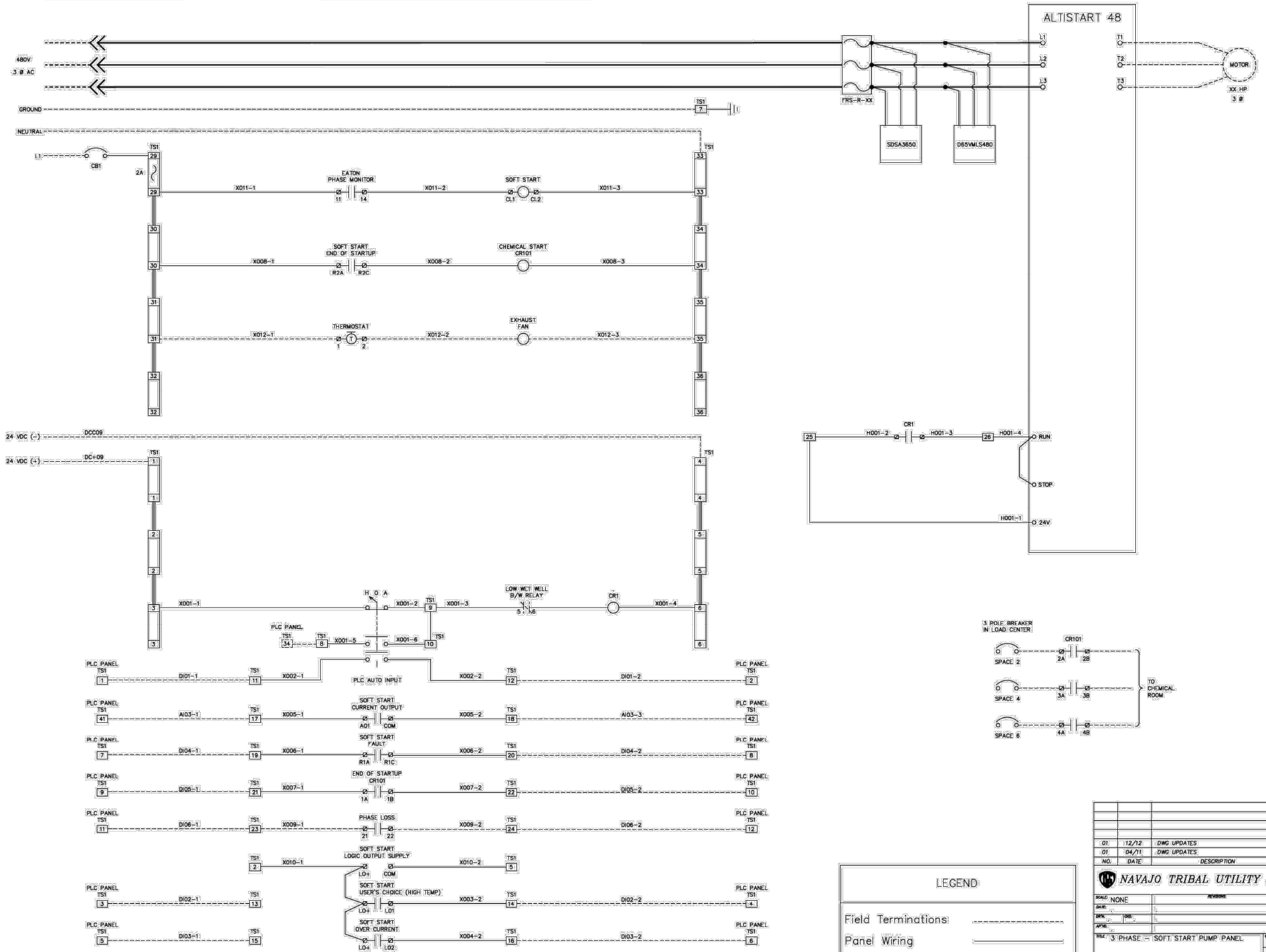

Rev #	Date	Description	By	Chk'd

SOUDER, MILLER & ASSOCIATES
Engineering • Environmental • Geomatics
Serving the Southwest & Rocky Mountains
5454 Venice Avenue NE, Suite D
Albuquerque, NM 87113
Phone (505) 294-0942 Toll-Free (877) 294-0942 Fax (505) 293-3430
www.soudermiller.com

THE NAVAJO NATION
McKINLEY COUNTY, NEW MEXICO

THOREAU BACA WELL CONNECTION
SECTION 19, T. 14 N., R. 13 W.
SOFT START PUMP PANEL (2 OF 3)

STANDARD DRAWING

THIS DRAWING IS INCOMPLETE AND NOT TO BE USED FOR CONSTRUCTION UNLESS IT IS STAMPED, SIGNED AND DATED

Designed	Drawn	Checked
TTT	AAV	JMG

Date: March 2021

Scale: Horiz: N/A
Vert: N/A

Project No: 6922883

Sheet: E-4

P:\6-Baca-Prewitt (6922883)\Baca Thoreau Well Connection\CAD\DWG\6922883-Thoreau Well Conn Electrical.dwg
3/4/2021 1:52:53 PM aav

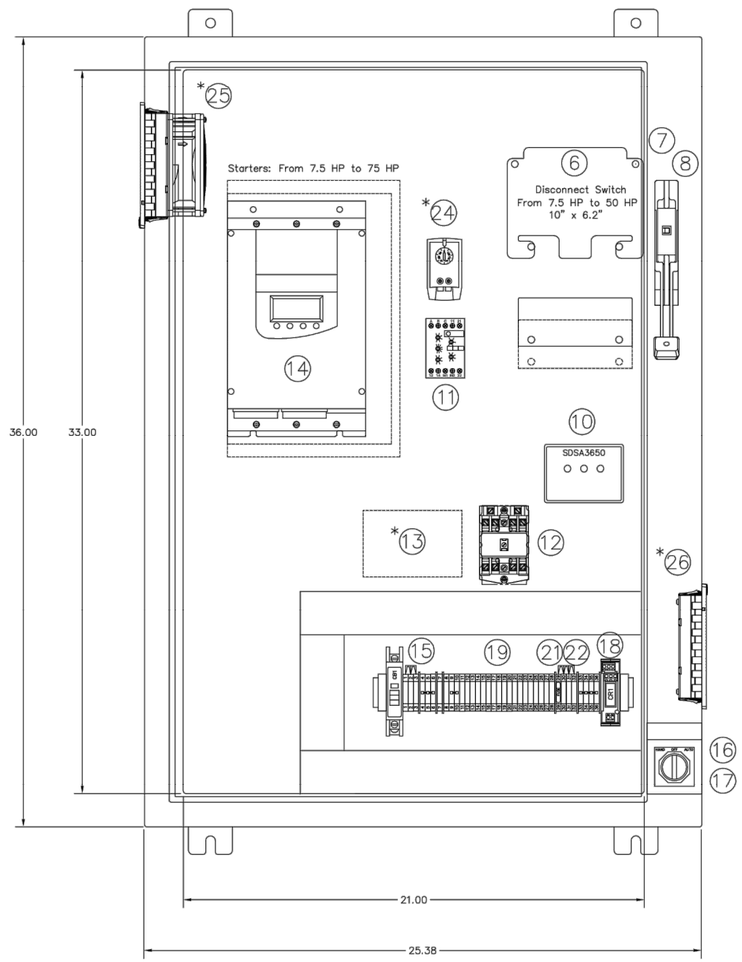

BILL OF MATERIALS

ITEM	QTY	PART NO.	DESCRIPTION	MFG
1	1	A-36SA2610LPPL	SINGLE DOOR TYPE 12 ENCLOSURE	HOFFMAN
2	1	A-36P24	BACKPLANE	HOFFMAN
3	1	F2X4LG6	2X4 WIRING DUCT	PANDUIT
4	1	C2LG6	2" DUCT COVER	PANDUIT
5	1	1492DR6	EXTENDED DIN RAIL	ALLEN BRADLEY
6	1	REFER TO TABLE 1	DISCONNECT	SQUARE D
7	1	9422A1	HANDLE	SQUARE D
8	1	9422 TDK-2	DOOR MOUNT	SQUARE D
9	3	REFER TO TABLE 1	480V DISCONNECT FUSE	BUSSMAN
10	1	SDSA3650	SECONDARY SURGE ARRESTER	SQUARE D
11	1	D65VMLS480	PHASE MONITOR	EATON
12	1	8501XMO40V02	8501 TYPE X INDUSTRIAL CONTROL RELAY	SQUARE D
13*	1	1500-G-L1-S7	INDUCTION CONTROL RELAY	B/W CONTROL
14	1	REFER TO TABLE 1	ALTISTART 48	SQUARE D
15	1	QOU115	15A CIRCUIT BREAKER	SQUARE D
16	1	9001KS43BH2	SELECTOR SWITCH	SQUARE D
17	1	9001KN160WP	HOA LEGEND PLATE	SQUARE D
18	1	UMK 22 REL 24	RELAY MODULE, DPDT	PHOENIX CONTACT
19	32	UK5 N	UK5 N TERMINALS	PHOENIX CONTACT
20	1	USLKG5	GROUND TERMINAL	PHOENIX CONTACT
21	1	UK4TG	FUSE TERMINAL BASE	PHOENIX CONTACT
22	1	ST-SILA250UK4	FUSE PLUG W/FUSE	PHOENIX CONTACT
23	1	FB10-6 #0201184	FIXED BRIDGE	PHOENIX CONTACT
24*	1	FLZ 530	THERMOSTAT	PFANNENBERG
25*	1	PF 22000	FAN FILTER KIT	PFANNENBERG
26*	1	PFA 20000	LOUVER FILTER KIT	PFANNENBERG

13 – WILL BE USED IF THERE IS NO SUBMERSIBLE TRANSMITTER AVAILABLE..*
24,25*,26* – WILL BE USED ON ALL INDOOR APPLICATIONS..*

TABLE 1 – ADDITIONAL PART NUMBERS

STARTER	APPLICATION	ALTISTART 48	DISCONNECT	DISCONNECT FUSE
10 HP	7.5 HP	ATS48D17Y	TCF331	FRS-R-20
15 HP	10 HP	ATS48D22Y	TCF331	FRS-R-30
20 HP	15 HP	ATS48D32Y	TDF631	FRS-R-40
25 HP	20 HP	ATS48D38Y	TDF631	FRS-R-45
30 HP	25 HP	ATS48D47Y	TDF631	FRS-R-60
40 HP	30 HP	ATS48D62Y	TEF101	FRS-R-70
50 HP	40 HP	ATS48D75Y	TEF101	FRS-R-90
60 HP	50 HP	ATS48D88Y	TEF101	FRS-R-110

NO.	DATE	DESCRIPTION	BY
02	12/12	MATERIALS LIST & DWG UPDATES	NTUA
01	07/05	MATERIALS LIST & DWG UPDATES	NTUA

NAVAJO TRIBAL UTILITY AUTHORITY

SCALE: NONE
DATE: .
DRN. . CKD. .
APVD. .
REVISIONS | BY | DATE

TITLE: 3 PHASE – SOFT START PUMP PANEL
7.5 HP TO 50 HP APPLICATIONS
.
BACKPLANE

W.O.#
SHEET 3 OF 3

Rev #	Date	Description	By	Chk'd

SOUDER, MILLER & ASSOCIATES
Engineering • Environmental • Geomatics
Serving the Southwest & Rocky Mountains
5454 Venice Avenue NE, Suite D
Albuquerque, NM 87113
Phone (505) 294-0942 Toll-Free (877) 294-0942 Fax (505) 293-3430
www.soudermiller.com

THE NAVAJO NATION
McKINLEY COUNTY, NEW MEXICO

THOREAU BACA WELL CONNECTION
SECTION 19, T. 14 N., R. 13 W.
SOFT START PUMP PANEL (3 OF 3)

STANDARD DRAWING

THIS DRAWING IS INCOMPLETE AND NOT TO BE USED FOR CONSTRUCTION UNLESS IT IS STAMPED, SIGNED AND DATED

Designed	Drawn	Checked
TTT	AAV	JMG

Date: March 2021
Scale: Horiz: N/A Vert: N/A
Project No: 6922883
Sheet: E-5

P:\6-Baca-Prewitt (6922883)\Baca Thoreau Well Connection\CAD\DWG\6922883-Thoreau Well Conn Electrical.dwg
3/4/2021 1:52:57 PM aav

NAVAJO TRIBAL UTILITY AUTHORITY
PUMP CONTROL PANEL LAYOUT

PLC CONTROL PANEL

SCHEDULE OF DRAWINGS

SHEET	FILENAME	TITLE	NOTES
1	PLC_CV	COVERSHEET	SHEDULE OF DRAWINGS
2	PLC_DIO	DISCRETE I/O	WIRING
3	PLC_AIO	ANALOG I/O	WIRING
4	PLC_PWR	POWER DISTRIBUTION	WIRING
5	PLC_BP	BACKPLANE LAYOUT	BP W/ BOM
5A	PLC_SOP	SWING OUT PANEL	BP W/ BOM
6	PLC_CBL	COMM CABLES PINOUT	

NO.	DATE	DESCRIPTION	BY

NAVAJO TRIBAL UTILITY AUTHORITY

SCALE: NONE
DATE: 12/1/97
DRN: -
CHK: -
APVD: -
REVISIONS | BY | DATE
FILE: PLC CONTROL PANEL COVER SHEET
SHEET 1 OF 6

Rev #	Date	Description	By	Chk'd

SOUDER, MILLER & ASSOCIATES
Engineering • Environmental • Geomatics
Serving the Southwest & Rocky Mountains
5454 Venice Avenue NE, Suite D
Albuquerque, NM 87113
Phone (505) 294-0942 Toll-Free (877) 294-0942 Fax (505) 293-3430
www.soudermiller.com

THE NAVAJO NATION
McKINLEY COUNTY, NEW MEXICO

THOREAU BACA WELL CONNECTION
SECTION 19, T. 14 N., R. 13 W.
PLC CONTROL PANEL (1 OF 6)

STANDARD DRAWING

THIS DRAWING IS INCOMPLETE AND NOT TO BE USED FOR CONSTRUCTION UNLESS IT IS STAMPED, SIGNED AND DATED

Designed	Drawn	Checked
TTT	AAV	JMG

Date: March 2021
Scale: Horiz: N/A Vert: N/A
Project No: 6922883
Sheet: E-6

P:\6-Baca-Prewitt (6922883)\Baca Thoreau Well Connection\CAD\DWG\6922883-Thoreau Well Conn Electrical.dwg
3/4/2021 1:53:02 PM aav

POWER DISTRIBUTION THIS PAGE REFLECTS "LOGICAL" SCHEMATIC SEE "DC DISTRIBUTION" DRAWING AND "AC DISTRIBUTION" DRAWING FOR POINT TO POINT TERMINATIONS

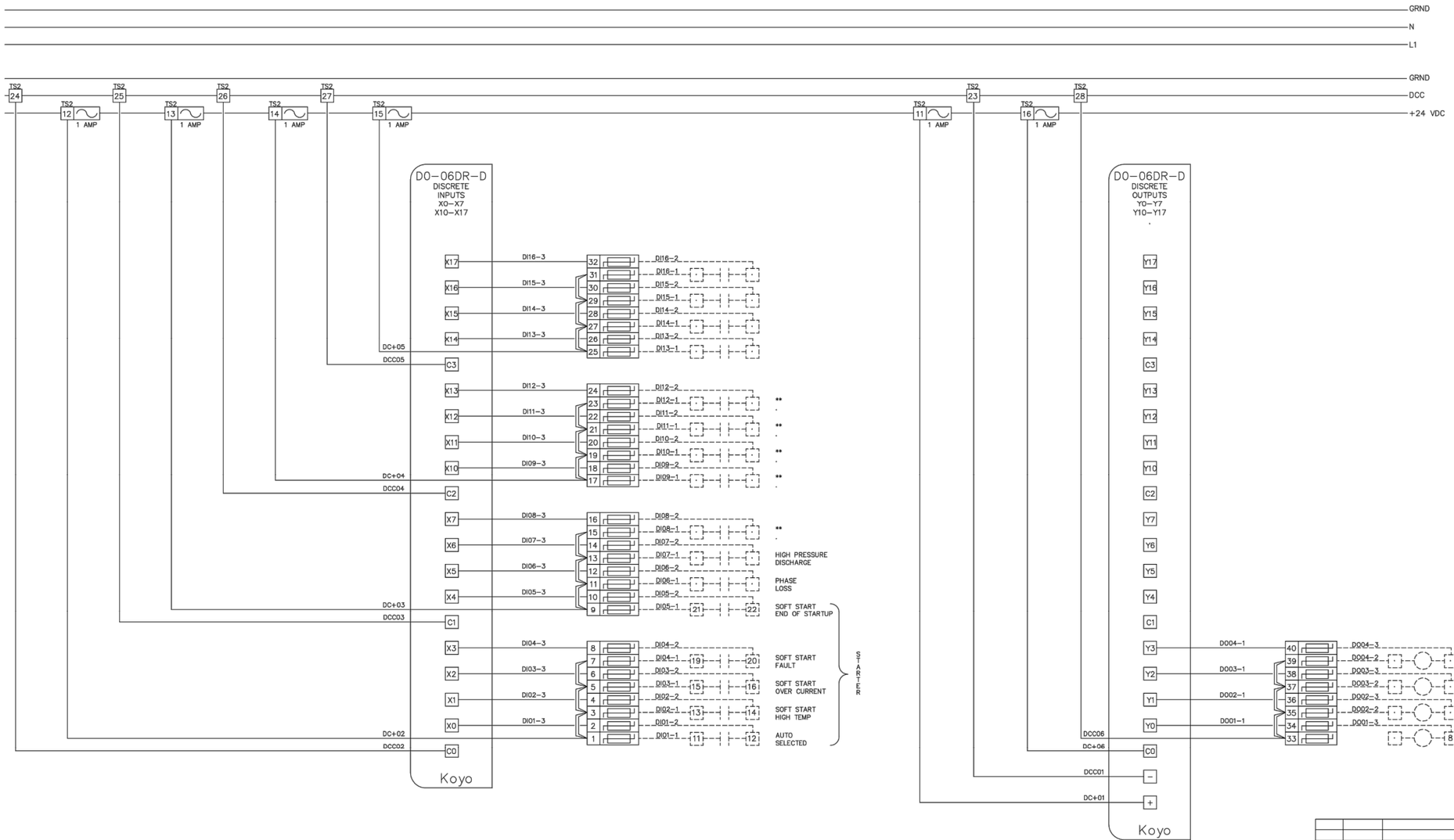

NOTE:
** – ADDITIONAL INPUTS & OUTPUTS WILL BE DETERMINED ONSITE.

LEGEND

Field Terminations ----------

Panel Wiring ————————

NO.	DATE	DESCRIPTION	BY
03	12/13	DWG UPDATES	NTUA
02	12/12	DWG UPDATES	NTUA
01	07/05	DWG UPDATES	NTUA

NAVAJO TRIBAL UTILITY AUTHORITY

SCALE: NONE
DATE: .
DFTN. . CKD. .
APVD. .
REVISIONS | BY | DATE

TITLE: PLC CONTROL PANEL
DISCRETE I/O
(SIMPLEX WELL WITH SOFT STARTER)

W.O.#

SHEET 2 OF 6

Rev #	Date	Description	By	Ckk'd

SOUDER, MILLER & ASSOCIATES
Engineering • Environmental • Geomatics
Serving the Southwest & Rocky Mountains
5454 Venice Avenue NE, Suite D
Albuquerque, NM 87113
Phone (505) 294-0942 Toll-Free (877) 294-0942 Fax (505) 293-3430
www.soudermiller.com

THE NAVAJO NATION
McKINLEY COUNTY, NEW MEXICO

THOREAU BACA WELL CONNECTION
SECTION 19, T. 14 N., R. 13 W.
PLC CONTROL PANEL (2 OF 6)

STANDARD DRAWING

THIS DRAWING IS INCOMPLETE AND NOT TO BE USED FOR CONSTRUCTION UNLESS IT IS STAMPED, SIGNED AND DATED

Designed TTT | Drawn AAV | Checked JMG

Date: March 2021

Scale: Horiz: N/A Vert: N/A

Project No: 6922883

Sheet: E-7

P:\6Baca-Prewitt (6922883)\Baca Thoreau Well Connection\CAD\DWG\6922883-Thoreau Well Conn Electrical.dwg
3/4/2021 1:53:07 PM aav

POWER DISTRIBUTION THIS PAGE REFLECTS "LOGICAL" SCHEMATIC SEE "DC DISTRIBUTION" DRAWING AND "AC DISTRIBUTION" DRAWING FOR POINT TO POINT TERMINATIONS

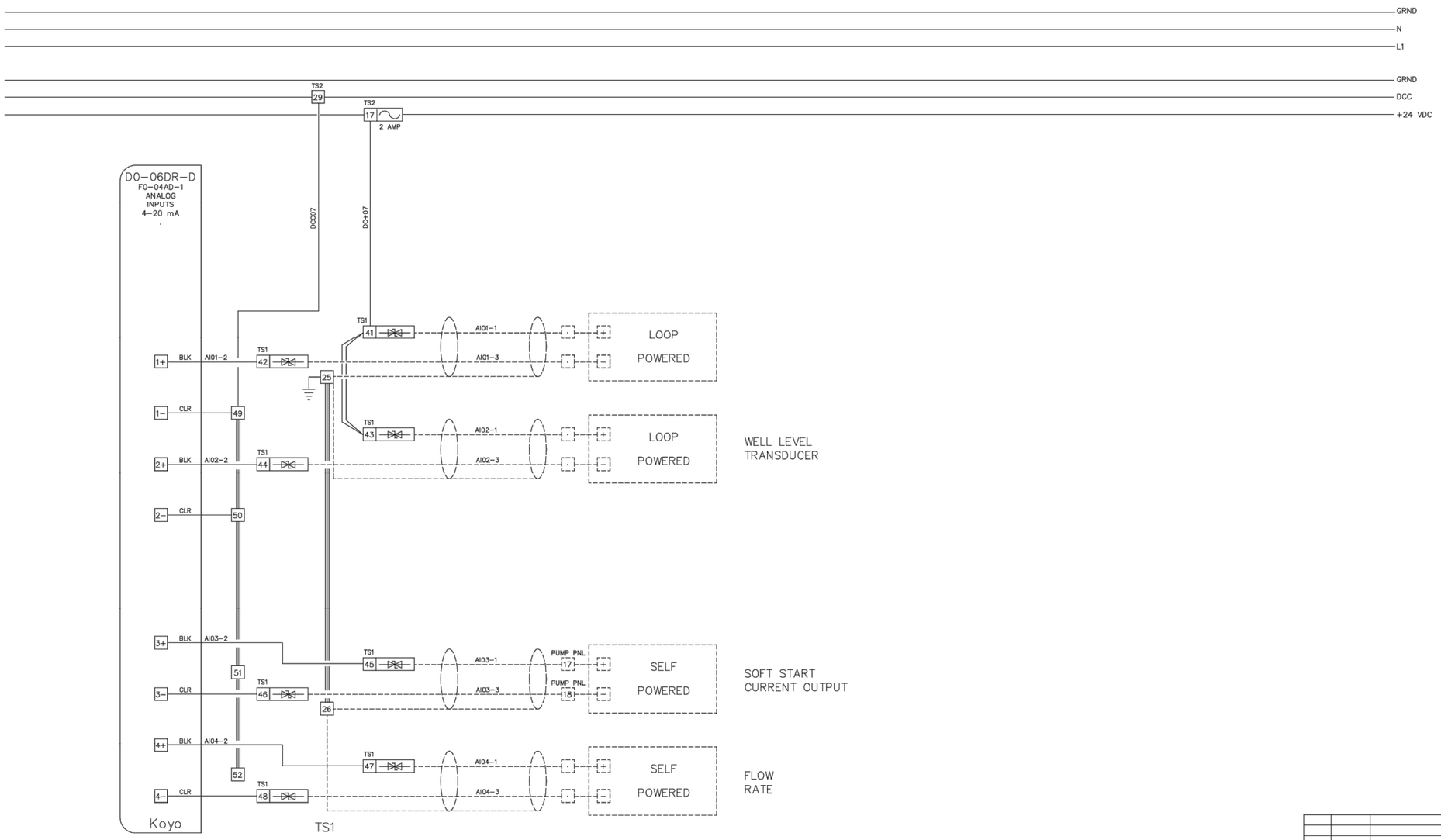

LEGEND	
Field Terminations	----------
Panel Wiring	————————

NO.	DATE	DESCRIPTION	BY
02	12/12	DWG UPDATES	NTUA
01	04/11	DWG UPDATES	NTUA

NAVAJO TRIBAL UTILITY AUTHORITY

SCALE NONE
DATE
DFN.
CKD.
APVD.
REVISIONS | BY | DATE

TITLE PLC CONTROL PANEL
ANALOG I/O
(SIMPLEX WELL WITH SOFT STARTER)

W.O.#

SHEET 3 OF 6

Rev #	Date	Description	By	Chk'd

SOUDER, MILLER & ASSOCIATES
Engineering • Environmental • Geomatics
Serving the Southwest & Rocky Mountains
5454 Venice Avenue NE, Suite D
Albuquerque, NM 87113
Phone (505) 294-0942 Toll-Free (877) 294-0942 Fax (505) 293-3430
www.soudermiller.com

THE NAVAJO NATION
McKINLEY COUNTY, NEW MEXICO

THOREAU BACA WELL CONNECTION
SECTION 19, T. 14 N., R. 13 W.
PLC CONTROL PANEL (3 OF 6)

STANDARD DRAWING

THIS DRAWING IS INCOMPLETE AND NOT TO BE USED FOR CONSTRUCTION UNLESS IT IS STAMPED, SIGNED AND DATED.

Designed	Drawn	Checked
TTT	AAV	JMG

Date: March 2021
Scale: Horiz: N/A Vert: N/A
Project No: 6922883
Sheet: E-8

P:\6-Baca-Prewitt (6922883)\Baca Thoreau Well Connection\CAD\DWG\6922883-Thoreau Well Conn Electrical.dwg
3/4/2021 1:53:12 PM aav

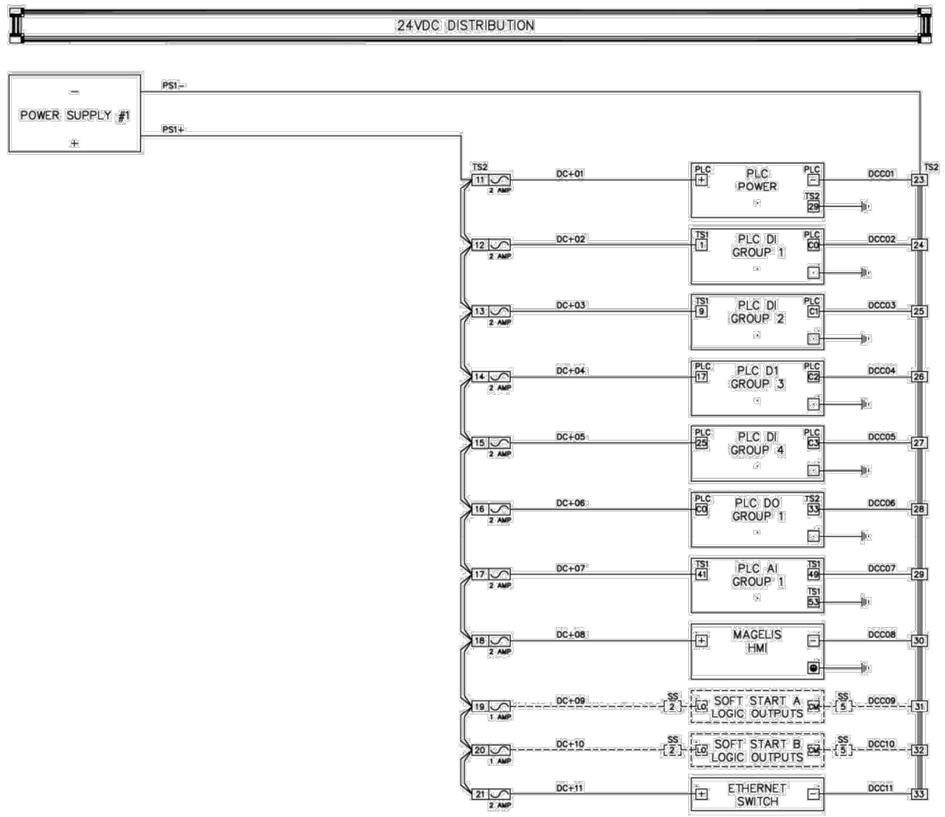

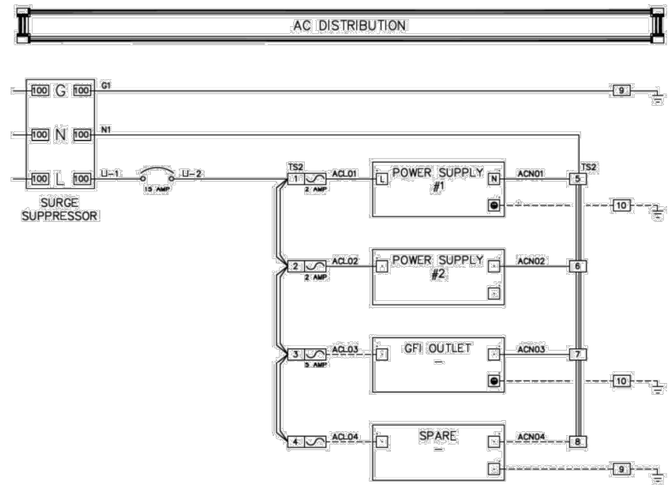

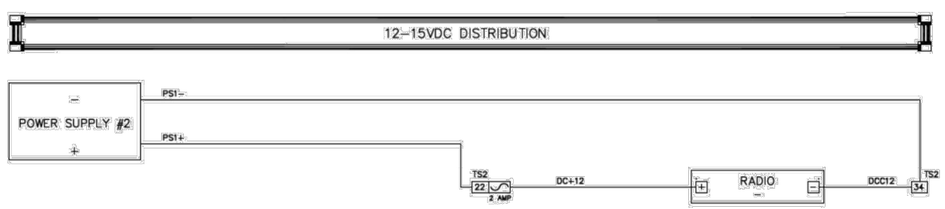

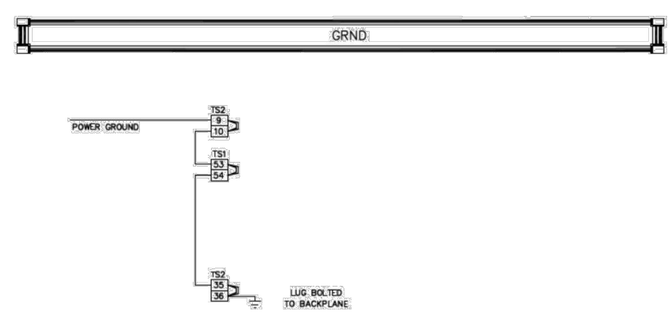

LEGEND

Field Terminations: ----------

Panel Wiring: ————————

NO.	DATE	DESCRIPTION	BY
03	11/14	DWG UPDATES	NTUA
02	12/12	DWG UPDATES	NTUA
01	07/05	DWG UPDATES	NTUA

NAVAJO TRIBAL UTILITY AUTHORITY

SCALE: NONE

TITLE: PLC CONTROL PANEL POWER DISTRIBUTION

SHEET 4 OF 6

Rev #	Date	Description	By	Chk'd

SOUDER, MILLER & ASSOCIATES
Engineering • Environmental • Geomatics
Serving the Southwest & Rocky Mountains
5454 Venice Avenue NE, Suite D
Albuquerque, NM 87113
Phone (505) 294-0942 Toll-Free (877) 294-0942 Fax (505) 293-3430
www.soudermiller.com

THE NAVAJO NATION — McKINLEY COUNTY, NEW MEXICO

THOREAU BACA WELL CONNECTION
SECTION 19, T. 14 N., R. 13 W.
PLC CONTROL PANEL (4 OF 6)

STANDARD DRAWING

THIS DRAWING IS INCOMPLETE AND NOT TO BE USED FOR CONSTRUCTION UNLESS IT IS STAMPED, SIGNED AND DATED

Designed	Drawn	Checked
TTT	AAV	JMG

Date: March 2021

Scale: Horiz: N/A Vert: N/A

Project No: 6922883

Sheet: E-9

P:\6-Baca-Prewitt (6922883)\Baca Thoreau Well Connection\CAD\DWG\6922883-Thoreau Well Conn Electrical.dwg
3/4/2021 1:53:17 PM aav

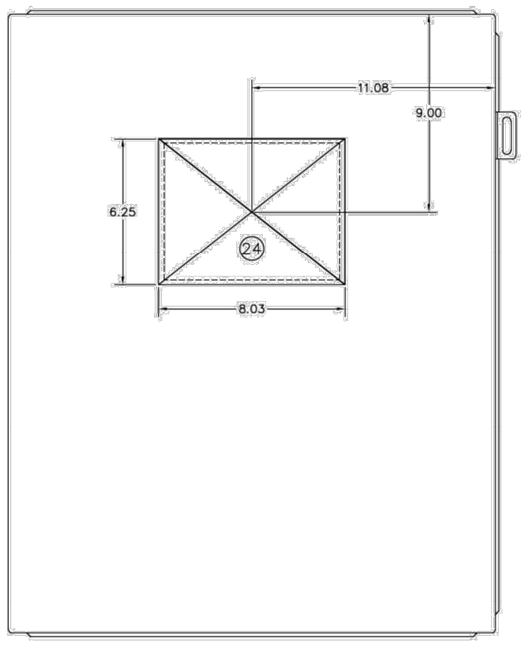

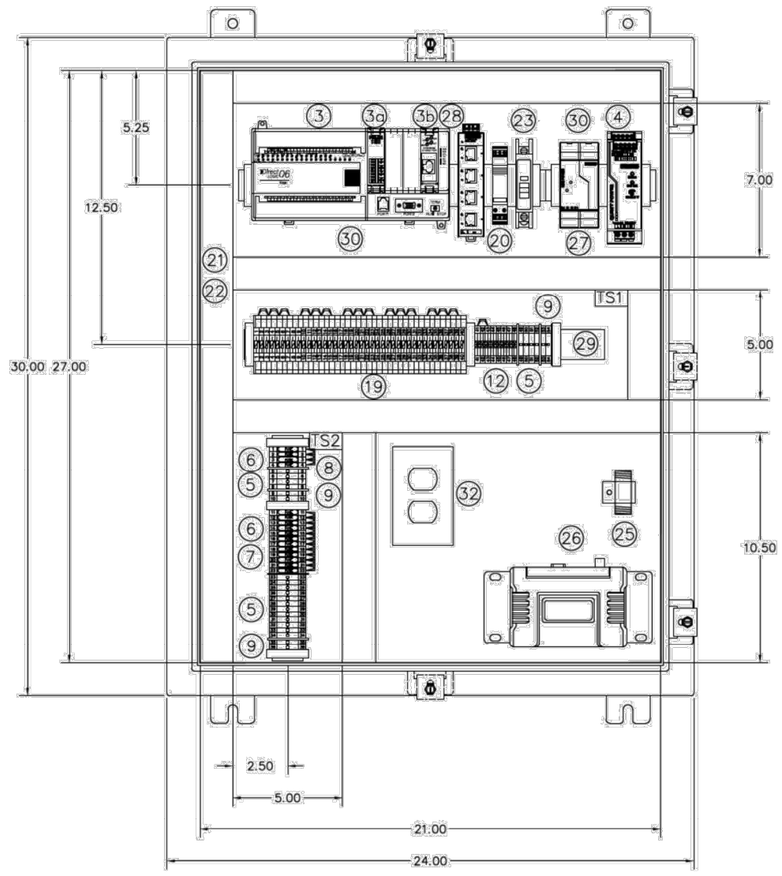

BILL OF MATERIALS

ITEM	QTY	PART NO.	DESCRIPTION	MFG
1	1	A-302410LP	SINGLE DOOR TYPE 12 ENCLOSURE	HOFFMAN
2	1	A-30P24	BACKPLANE	HOFFMAN
3	1	D0-06DR-D	DIRECT LOGIC DL-06 PLC	DIRECT LOGIC
3a	1	F0-04AD-1	ANALOG INPUT MODULE	DIRECT LOGIC
3b	1	H0-ECOM100	ETHERNET COMM MODULE	DIRECT LOGIC
4	1	QUINT-PS/1AC/24DC/5	POWER SUPPLY 22.5-28.5V ADJUSTABLE	PHOENIX CONTACT
5	20	UK5 N	UK5 N TERMINALS	PHOENIX CONTACT
6	16	UK4TG	FUSE TERMINAL BASE	PHOENIX CONTACT
7	12	ST-SILED24UK4	FUSE	PHOENIX CONTACT
8	4	ST-SILA250UK4	FUSE	PHOENIX CONTACT
9	6	USLKG5	GROUNDING TERMINAL	PHOENIX CONTACT
10	12	E/NS35N	END CLAMP	PHOENIX CONTACT
11	10	FBI0-6 #0201184	FIXED BRIDGE	PHOENIX CONTACT
12	10	EBI0-6 #0201139	INSERTION BRIDGE	PHOENIX CONTACT
13	10	D-UK4/10	END COVER	PHOENIX CONTACT
14	10	ATP-UK	PARTITION PLATES	PHOENIX CONTACT
15	3	DP-UKK3/5BK	SLKK5 SPACER PLATE	PHOENIX CONTACT
16	3	D-UKK3/5BK	SLKK5 ENDCOVER	PHOENIX CONTACT
17	8	UK 5/24 DC #2794699	TERMITRAB UK5 W/SUPPRESSOR DIODE	PHOENIX CONTACT
18	"	"	"	"
19	40	SLKK5 5/24VDC #2794903	TERMITRAB SLKK5 W/VARISTOR 240C (MOV)	PHOENIX CONTACT
20	1	PT2PE/S120AC	TERMITRAB AC POWER PROTECTION	PHOENIX CONTACT
21	2	E1.5X4LG6	WIRING DUCT	PANDUIT
22	2	C1.5LG6	DUCT COVER	PANDUIT
23	1	QOU115	CIRCUIT BREAKER	SQUARE D
24	1	XBT-GT4330	7.5 GRAPHIC TERMINAL TOUCHSCREEN (MAGELIS)	SQUARE D
24a	1	CAT6	ETHERNET PATCH CABLE (4' - BLACK)	BELDEN
25	1	IS-50NX-C2	LIGHTNING ARRESTER	POLYPHASER
26	1	TransNET	900 MHz RADIO	GEMDS
	or 1	SD4	400 MHz RADIO	GEMDS
27	1	MIN-PS-100-240AC/10-15DC/2	POWER SUPPLY 10-15V ADJUSTABLE	PHOENIX CONTACT
28	1	FL SWITCH SFN 5TX	ETHERNET SWITCH	PHOENIX CONTACT
29	3	1492DR6	EXTENDED DIN RAIL	ALLEN BRADLEY
30	1	1492-DR5	DIN RAIL	ALLEN BRADLEY
31	1	COMM CABLE	CABLE - PLC TO MODEM (TO LENGTH)	"
32	1	DRUBGFI15	DIN RAIL UTILITY BOX	HUBBELL

NO.	DATE	DESCRIPTION	BY
03	11/14	MATERIALS LIST & DWG UPDATES	NTUA
02	12/12	MATERIALS LIST & DWG UPDATES	NTUA
01	01/11	MATERIALS LIST & DWG UPDATES	NTUA

NAVAJO TRIBAL UTILITY AUTHORITY

SCALE: NONE

TITLE: PLC CONTROL PANEL BACKPLANE

SHEET 5 OF 6

P:\6-Baca-Prewitt (6922883)\Baca Thoreau Well Connection\CAD\DWG\6922883-Thoreau Well Conn Electrical.dwg
3/4/2021 1:53:22 PM aav

Rev #	Date	Description	By	Chk'd

SOUDER, MILLER & ASSOCIATES
Engineering • Environmental • Geomatics
Serving the Southwest & Rocky Mountains
5454 Venice Avenue NE, Suite D
Albuquerque, NM 87113
Phone (505) 294-0942 Toll-Free (877) 294-0942 Fax (505) 293-3430
www.soudermiller.com

THE NAVAJO NATION
McKINLEY COUNTY, NEW MEXICO

THOREAU BACA WELL CONNECTION
SECTION 19, T. 14 N., R. 13 W.
PLC CONTROL PANEL (5 OF 6)

STANDARD DRAWING

THIS DRAWING IS INCOMPLETE AND NOT TO BE USED FOR CONSTRUCTION UNLESS IT IS STAMPED, SIGNED AND DATED.

Designed	Drawn	Checked
TTT	AAV	JMG

Date: March 2021

Scale: Horiz: N/A Vert: N/A

Project No: 6922883

Sheet: E-10

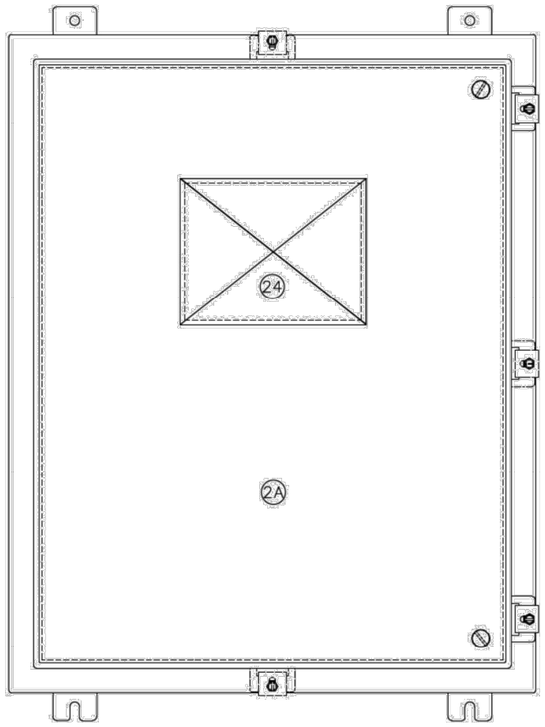

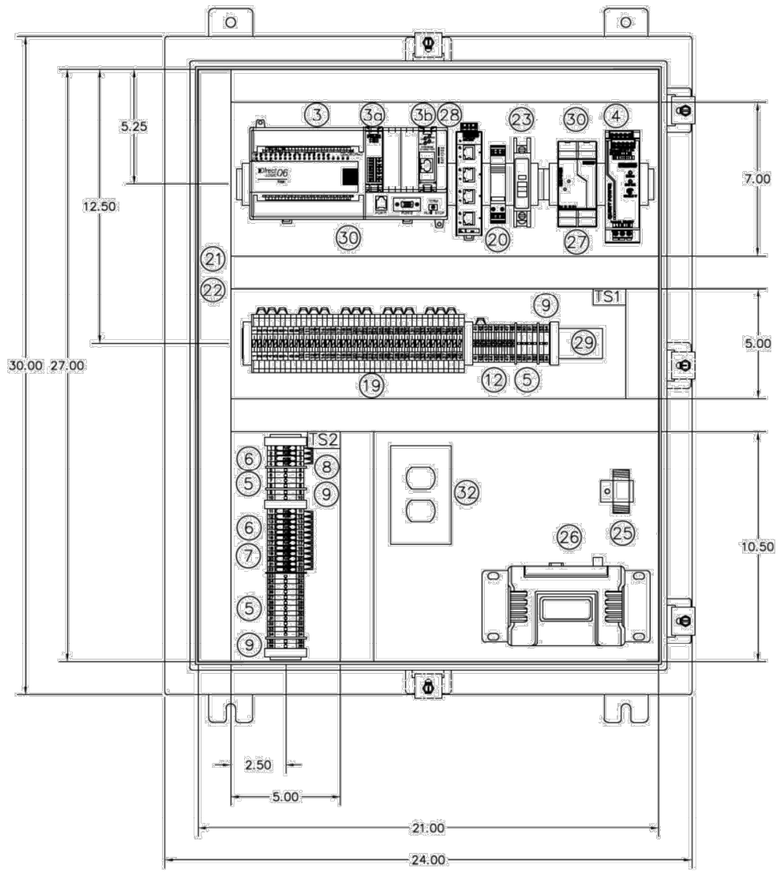

BILL OF MATERIALS

ITEM	QTY	PART NO.	DESCRIPTION	MFG
1	1	A-30H24CLP	SINGLE DOOR TYPE 4 ENCLOSURE	HOFFMAN
2	1	A-30P24	BACKPLANE	HOFFMAN
2a	1	A-NADFK	SWING OUT PANEL KIT	HOFFMAN
3	1	D0-06DR-D	DIRECT LOGIC DL-06 PLC	DIRECT LOGIC
3a	1	F0-04AD-1	ANALOG INPUT MODULE	DIRECT LOGIC
3b	1	H0-ECOM100	ETHERNET COMM MODULE	DIRECT LOGIC
4	1	QUINT-PS-100-240AC-24DC-5	POWER SUPPLY 22.5-28.5V ADJUSTABLE	PHOENIX CONTACT
5	20	UK5 N	UK5 N TERMINALS	PHOENIX CONTACT
6	16	UK4TG	FUSE TERMINAL BASE	PHOENIX CONTACT
7	12	ST-SILED24UK4	FUSE	PHOENIX CONTACT
8	4	ST-SILA250UK4	FUSE	PHOENIX CONTACT
9	6	USLKG5	GROUNDING TERMINAL	PHOENIX CONTACT
10	12	E/NS35N	END CLAMP	PHOENIX CONTACT
11	10	FB10-6 #0201184	FIXED BRIDGE	PHOENIX CONTACT
12	10	EB10-6 #0201139	INSERTION BRIDGE	PHOENIX CONTACT
13	10	D-UK4/10	END COVER	PHOENIX CONTACT
14	10	ATP-UK	PARTITION PLATES	PHOENIX CONTACT
15	3	DP-UKK3/5BK	SLKK5 SPACER PLATE	PHOENIX CONTACT
16	3	D-UKK3/5BK	SLKK5 ENDCOVER	PHOENIX CONTACT
17	8	UK 5/24 DC #2794699	TERMITRAB UK5 W/SUPPRESSOR DIODE	PHOENIX CONTACT
18	"	"	"	"
19	40	SLKK5 5/24VDC #2794903	TERMITRAB SLKK5 W/VARISTOR 24DC (MOV)	PHOENIX CONTACT
20	1	PT2PE/S120AC	TERMITRAB AC POWER PROTECTION	PHOENIX CONTACT
21	2	C1.5X4LG6	WIRING DUCT	PANDUIT
22	2	C1.5LG6	DUCT COVER	PANDUIT
23	1	QOU115	CIRCUIT BREAKER	SQUARE D
24	1	XBT-GT4330	7.5 GRAPHIC TERMINAL TOUCHSCREEN (MAGELIS)	SQUARE D
24a	1	CAT6	ETHERNET PATCH CABLE (4' - BLACK)	BELDEN
25	1	IS-50NX-C2	LIGHTNING ARRESTER	POLYPHASER
26	1 or	TransNET	902 - 928 MHz RADIO	GEMDS
"	1	SD4	380 - 512 MHz RADIO	GEMDS
27	1	MINI-PS-100-240 AC/10-15DC/2	POWER SUPPLY 10-15V ADJUSTABLE	PHOENIX CONTACT
28	1	FL SWITCH SFN 5TX	ETHERNET SWITCH	PHOENIX CONTACT
29	3	1492DR6	EXTENDED DIN RAIL	ALLEN BRADLEY
30	1	1492-DR5	DIN RAIL	ALLEN BRADLEY
31	1	COMM CABLE	CABLE - PLC TO MODEM (TO LENGTH)	"
32	1	DRUBGFI15	DIN RAIL UTILITY BOX	HUBBELL

NO.	DATE	DESCRIPTION	BY
03	11/14	MATERIALS LIST & DWG UPDATES	NTUA
02	12/12	MATERIALS LIST & DWG UPDATES	NTUA
01	07/05	MATERIALS LIST & DWG UPDATES	NTUA

NAVAJO TRIBAL UTILITY AUTHORITY

SCALE: NONE

DATE:

DR'N: CKD:

APVD:

REVISIONS | BY | DATE

TITLE: PLC CONTROL PANEL W/ SWING OUT PANEL

SHEET 5A OF 6

Rev #	Date	Description	By	Ckd

SOUDER, MILLER & ASSOCIATES
Engineering • Environmental • Geomatics
Serving the Southwest & Rocky Mountains
5454 Venice Avenue NE, Suite D
Albuquerque, NM 87113
Phone (505) 294-0942 Toll-Free (877) 294-0942 Fax (505) 293-3430
www.soudermiller.com

THE NAVAJO NATION
McKINLEY COUNTY, NEW MEXICO

THOREAU BACA WELL CONNECTION
SECTION 19, T. 14 N., R. 13 W.
PLC CONTROL PANEL (5A OF 6)

STANDARD DRAWING

THIS DRAWING IS INCOMPLETE AND NOT TO BE USED FOR CONSTRUCTION UNLESS IT IS STAMPED, SIGNED AND DATED

Designed	Drawn	Checked
TTT	AAV	JMG

Date: March 2021

Scale: Horiz: N/A Vert: N/A

Project No: 6922883

Sheet: E-11

P:\6-Baca-Prewitt (6922883)\Baca Thoreau Well Connection\CAD\DWG\6922883-Thoreau Well Conn Electrical.dwg
3/4/2021 1:53:27 PM aav

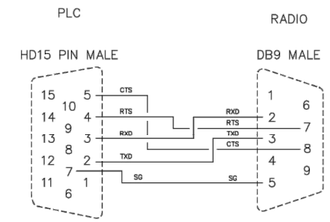

A CABLE DIAGRAM: PLC TO RADIO

NO.	DATE	DESCRIPTION	BY
03	11/14	DWG UPDATES	NTUA
02	12/12	DWG UPDATES	NTUA
01	01/11	DWG UPDATES	NTUA

NAVAJO TRIBAL UTILITY AUTHORITY

SCALE: NONE
DATE: .
DRN. . CKD. .
APV'D. .
REVISIONS | BY | DATE

TITLE: PLC CONTROL PANEL
CABLE PINOUT

W.O.#

SHEET 6 OF 6

Rev #	Date	Description	By	Chk'd

SOUDER, MILLER & ASSOCIATES
Engineering • Environmental • Geomatics
Serving the Southwest & Rocky Mountains
5454 Venice Avenue NE, Suite D
Albuquerque, NM 87113
Phone (505) 294-0942 Toll-Free (877) 294-0942 Fax (505) 293-3430
www.soudermiller.com

THE NAVAJO NATION
McKINLEY COUNTY, NEW MEXICO

THOREAU BACA WELL CONNECTION
SECTION 19, T. 14 N., R. 13 W.
PLC CONTROL PANEL (6 OF 6)

STANDARD DRAWING

THIS DRAWING IS INCOMPLETE AND NOT TO BE USED FOR CONSTRUCTION UNLESS IT IS STAMPED, SIGNED AND DATED

Designed	Drawn	Checked
TTT	AAV	JMG

Date: March 2021
Scale: Horiz: N/A Vert: N/A
Project No: 6922883
Sheet: E-12

P:\6-Baca-Prewitt (6922883)\Baca Thoreau Well Connection\CAD\DWG\6922883-Thoreau Well Conn Electrical.dwg
3/4/2021 1:53:32 PM aav