NAVAJO DIVISION OF TRANSPORTATION

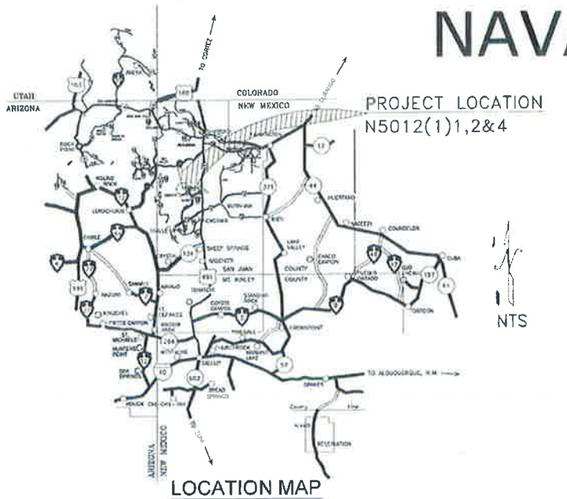

LOCATION MAP
NTS

PLANS FOR PROPOSED

N5012(1)1,2&4

SANOSTEE WASH BRIDGE

I.D. N32424
SAN JUAN COUNTY
LENGTH 0.644 miles

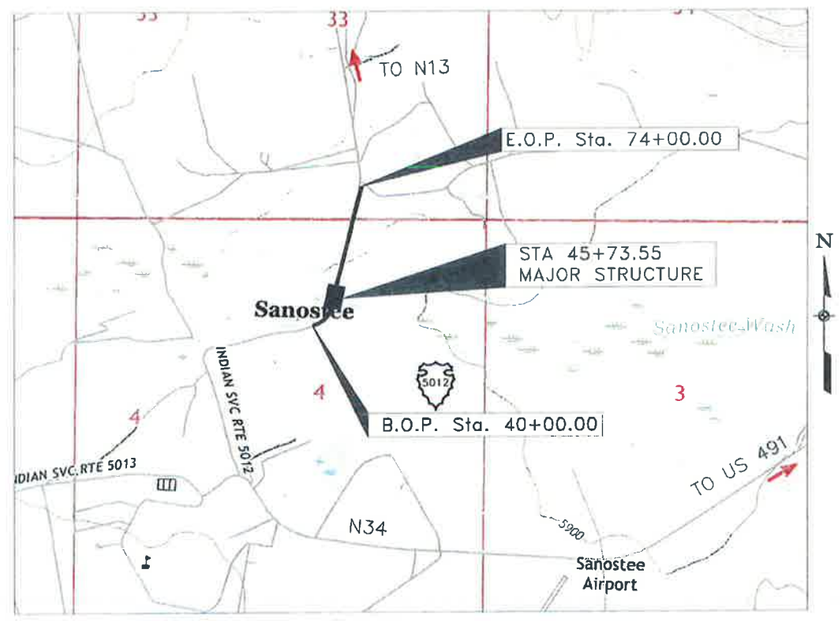

VICINITY MAP
NTS

SHEET INDEX	
SHEET	SHEET TITLE
1	COVER SHEET
2	GENERAL NOTES AND UTILITY CONTACTS
3	SUMMARY OF QUANTITIES
4 THRU 6	MISCELLANEOUS QUANTITIES
7	TYPICAL SECTIONS
8	TURNOUT AND MISCELLANEOUS DETAILS
9	HORIZONTAL CONTROL
10 THRU 13	PLAN AND PROFILE SHEETS
14 THRU 15	TURNOUT PLAN AND PROFILE SHEETS
16	BRIDGE GENERAL NOTES
17	BRIDGE ESTIMATED QUANTITIES
18	BRIDGE PLAN
19	BRIDGE PROFILE
20	TRANSVERSE SECTION
21	FOUNDATION PLAN
22	DRILLED SHAFT DETAILS
23	ABUTMENT DETAILS
24	WINGWALL DETAILS
25	BEARING DETAILS
26	PRESTRESSED CONCRETE BEAM DETAILS
27	INTERMEDIATE DIAPHRAGM DETAILS
28	DIAPHRAGM DETAILS
29	DECK SLAB PLAN
30	TOP OF SLAB ELEVATIONS
31	APPROACH SLAB DETAILS
32	REBAR SCHEDULE
33	TEMPORARY TRAFFIC CONTROL DETAIL
34 THRU 36	PERMANENT SIGNING AND STRIPING
37 THRU 40	STRUCTURE PLACEMENTS
41 THRU 48	CROSS SECTIONS
49 THRU 72	STANDARD DRAWINGS
75	**TOTAL SHEET COUNT**

PROJECT LENGTH						
ROADWAY	STATION TO STATION				FEET	MILES
N5012	B.O.P.	40+00.00	E.O.P.	74+00.00	3400	0.644
				TOTAL	3400	0.644

DESIGN CRITERIA	
AVERAGE DAILY TRAFFIC 2013 (ADT)	334 VPD
AVERAGE DAILY TRAFFIC 2033 (ADT)	496 VPD
DESIGN HOURLY VOLUME 2013 (DHV)	28 VPH
MAXIMUM SUPERELEVATION (*e* max)	6%
STA 40+00.00 TO STA 48+00.00	
DESIGN SPEED	35 MPH
POSTED SPEED	35 MPH
MINIMUM RADIUS	340 FT
MAX. GRADIENT	7%
MIN. STOPPING SIGHT DISTANCE	250 FT
MIN. PASSING SIGHT DISTANCE	550 FT
STA 48+00.00 TO STA 74+00.00	
DESIGN SPEED:	50 MPH
POSTED SPEED:	35 MPH
MINIMUM RADIUS	833 FT
MAX. GRADIENT	6%
MIN. STOPPING SIGHT DISTANCE	425 FT
MIN. PASSING SIGHT DISTANCE	800 FT

RIGHT-OF-WAY TABLE			
BEGIN STATION	END STATION	RIGHT	LEFT
40+00.00	74+00.00	75.00'	75.00'

TYPE OF CONSTRUCTION:
GRADE & DRAINAGE, PLACEMENT OF UNTREATED AGGREGATE BASE COURSE AND DOUBLE CHIP SEAL PAVEMENT, DRAINAGE STRUCTURES, ONE (1) BRIDGE AND MISCELLANEOUS CONSTRUCTION

PLANS PREPARED BY

WILSON & COMPANY
4401 MASTHEAD ST. NE
SUIT 150
ALBUQUERQUE, NM 87109

DEREK D. MEIER
NEW MEXICO
14504
LICENSED PROFESSIONAL ENGINEER
4/8/20

U.S. CUSTOMARY DIMENSIONS:
SLOPES ARE EXPRESSED AS RUN:RISE

SPECIFICATIONS:
"STANDARD SPECIFICATIONS FOR CONSTRUCTION OF ROADS AND BRIDGES ON FEDERAL HIGHWAY PROJECTS, FP-14"

OWNER

RECOMMENDED: _____ DATE: 7/27/21
PRINCIPAL ENGINEER
NAVAJO DIVISION OF TRANSPORTATION

APPROVED: _____ DATE: 7/27/21
DIRECTOR
NAVAJO DIVISION OF TRANSPORTATION

REGION	STATE	RESERVATION	ROUTE	PROJECT NO.	SHEET	TOTAL SHEETS
NORTH	NEW MEXICO	NAVAJO	N5012	N5012(1)1,2&4	2	75

GENERAL NOTES:

1. ALL WORKMANSHIP AND MATERIALS SHALL CONFORM TO THE STANDARD SPECIFICATIONS FOR CONSTRUCTION OF ROADS AND BRIDGES ON FEDERAL HIGHWAY PROJECTS (FP-14), AND THE SUPPLEMENTAL SPECIFICATIONS FOR THIS PROJECT.

2. ALL PERMANENT AND TEMPORARY ROADSIDE SIGNS, AND PAVEMENT MARKINGS SHALL BE PLACED IN ACCORDANCE WITH THE MANUAL ON UNIFORM TRAFFIC CONTROL DEVICES (MUTCD) FOR STREETS AND HIGHWAYS (LATEST EDITION) AND IN ACCORDANCE WITH THE DETAILS ON THESE PLANS. PLACEMENT OF "STOP" BAR, PERMANENT TRAFFIC SIGNS AND PAVEMENT MARKINGS SHALL BE FIELD ADJUSTED AS DIRECTED BY THE CONSTRUCTION MANAGER (CM), AT NO ADDITIONAL COST TO THE GOVERNMENT.

3. THE TEMPORARY TRAFFIC CONTROL DETAILS SHOWN REFLECTS GENERAL REQUIREMENTS FOR THIS PROJECT. THE CONTRACTOR IS RESPONSIBLE FOR PREPARING AND SUBMITTING A TRAFFIC CONTROL PLAN IN ACCORDANCE WITH THESE DETAILS, TAKING INTO ACCOUNT THE CONTRACTOR'S CONSTRUCTION SEQUENCING PLAN, MUTCD, AND THE SUPPLEMENTAL SPECIFICATIONS FOR SECTION 63501-TEMPORARY TRAFFIC CONTROL. THE CONTRACTOR SHALL ALSO SUBMIT A COPY OF THIS TRAFFIC CONTROL PLAN TO THE CM (2)-WEEKS PRIOR TO START OF CONSTRUCTION.

4. THE DESIGN FEATURES INCLUDING HORIZONTAL AND VERTICAL ALIGNMENTS, TYPICAL SECTIONS, AND OTHER DESIGN DETAILS SHOWN SHALL NOT BE ALTERED OR MODIFIED IN ANYWAY DURING CONSTRUCTION WITHOUT THE EXPRESSED WRITTEN DIRECTION AND WRITTEN APPROVAL OF THE ENGINEER OF RECORD THROUGH THE CM, UNLESS OTHERWISE NOTED IN THESE PLANS OR SPECIFICATIONS. DRAINAGE STRUCTURES AND TURNOUTS SHALL BE INSTALLED AS SHOWN WITH ONLY MINOR CORRECTIONS IN LOCATION, SKEW, AND/OR INVERT ELEVATIONS AS NEEDED TO FIT FIELD CONDITIONS. TURNOUTS MAY NOT BE SHIFTED MORE THAN 15 FEET FROM THE LOCATIONS SHOWN ON THE PLANS WITHOUT THE WRITTEN APPROVAL OF THE CM.

5. THE CONTRACTOR SHALL ASSUME FULL RESPONSIBILITY AND EXPENSE FOR DISPOSAL OF TRASH AND/OR CONSTRUCTION DEBRIS IN ACCORDANCE WITH SECTIONS 107 AND 203 OF THE FP-14 AS WELL AS ANY AND ALL PERMIT REQUIREMENTS. THIS WORK SHALL BE INCIDENTAL OBLIGATIONS OF THE CONTRACTOR.

6. THE BIDDER SHALL READ AND MAKE CAREFUL EXAMINATION OF THE PLANS, SPECIFICATIONS, QUANTITIES, MATERIAL, SURVEYING REQUIREMENTS, AND VISIT THE SITE OF THE PROPOSED CONSTRUCTION TO BECOME FAMILIAR WITH THE SITE CONDITIONS AND LIMITATIONS BEFORE MAKING A PROPOSAL. THE CONTRACTOR WILL BE RESPONSIBLE FOR ANY AND ALL ERRORS RESULTING FROM THE FAILURE TO MAKE SUCH AN EXAMINATION. ANY INFORMATION DERIVED FROM THE MAPS, PLANS, SPECIFICATIONS, PROFILES, DRAWINGS OR THE ENGINEER, SHALL NOT RELIEVE THE CONTRACTOR FROM ANY RISK OF FROM FULFILLING THE TERMS OF THE CONTRACT. THERE ARE SEVERAL AREAS WITH LIMITED WORKING ROOM WITHIN THE PROJECT RIGHT-OF-WAY, AND/OR WITH EXISTING FEATURES WITHIN OR NEAR THE PROJECT RIGHT-OF-WAY, THAT WILL REQUIRE "SPECIAL" CONSTRUCTION PROCEDURES.

7. THE CONTRACTOR IS REQUIRED TO SUBMIT A REVISED PIPE LIST TO THE CM BASED ON THE FIELD STAKING IN ACCORDANCE WITH SECTION 152 OF THE CONTRACT SUPPLEMENTAL SPECIFICATION. THE APPROVAL OF ANY AND ALL REVISED PIPE LISTS WITH ACCOMPANYING DRAWINGS IS RENDERED AS A SERVICE ONLY AND IS NOT CONSIDERED A GUARANTEE OF MEASUREMENTS, QUANTITIES, INSTALLATION PROCEDURES, AND/OR DIMENSIONS. NOR SHALL IT BE CONSIDERED AS RELIEVING THE CONTRACTOR FROM COMPLYING WITH THE CONTRACT SPECIFICATIONS AND DESIGN PLANS. THE CONTRACTOR IS HEREBY NOTIFIED THAT UNDER NO CIRCUMSTANCE SHALL ANY DRAINAGE STRUCTURE(S) BE INSTALLED BELOW THE NATURAL FLOW LINE OF THE WASH, CHANNEL, ARROYO, OR DITCH LINE.

8. NO WORK SHALL BE PERFORMED OR GROUND DISTURBED OUTSIDE OF THE DESIGNATED CONSTRUCTION LIMITS IN ACCORDANCE WITH SECTION 107 OF THE FP-14 WITHOUT WRITTEN APPROVAL BY THE CM UNLESS OTHERWISE SHOWN AND LABELED ON THESE PLANS AS "CONSTRUCTION ZONE". IN NO CASE SHALL ANY WORK BE PERFORMED OUTSIDE THE DESIGNATED RIGHTS-OF-WAY LIMITS WITHOUT WRITTEN APPROVAL FROM THE CM, UNLESS OTHERWISE SHOWN AND CALLED OUT ON THESE PLANS AS "CONSTRUCTION ZONE". THE CONSTRUCTION LIMIT IS THE CATCH POINT EARTHWORK LIMIT PLUS 10 FEET, NOT TO EXCEED THE RIGHT-OF-WAY LIMITS.

9. THE DETAILS SHOWN ON THE STORM WATER POLLUTION AND EROSION/SEDIMENT CONTROL DETAILS ARE GENERAL REQUIREMENTS TO BE USED BY THE CONTRACTOR IN PREPARING A STORM WATER POLLUTION PREVENTION PLAN ALONG WITH THE REQUIREMENTS IN SECTION 157 OF THE SUPPLEMENTAL SPECIFICATION AND SPECIAL CONTRACT REQUIREMENTS. THE SWPPP IS ONLY REQUIRED AT THE DRAINAGE PIPE REPLACEMENT LOCATIONS.THE CONTRACTOR IS REQUIRED TO SUBMIT COURTESY COPY OF THE APPROVED SWPPP TO THE NAVAJO NATION WATER QUALITY EPA OFFICE.

10. THE QUANTITIES SHOWN ARE FOR ESTIMATING PURPOSES ONLY AND TO COMPARE AND CANVAS BIDS. ACTUAL PAY QUANTITIES WILL BE DETERMINED IN THE FIELD FOR AUTHORIZED CHANGES THAT AFFECT THE QUANTITIES. ANY OVER-RUN OR UNDER-RUN OF QUANTITIES SHALL BE SUBJECT TO STANDARD GENERAL CONDITIONS, ARTICLE 11.3,E.4, VARIATION IN ESTIMATED QUANTITIES.

11. ALL TURNOUT/DRIVEWAYS, AS CALLED FOR ON THESE PLANS, SHALL EITHER BE CONSTRUCTED, REBUILT, RESHAPED AND/OR REMOVED UP TO THE RIGHT-OF-WAY LIMITS. ALL TURNOUTS SHALL BE PAVED TO THE CATTLEGUARD. THEN FROM THE BACK OF CATTLEGUARD TO THE R/W LINE, PLACE AGGREGATE BASE. REQUIRED GRADING, SHAPING, AND EARTH COMPACTION OUTSIDE OF THE RIGHT-OF-WAY, TO CONNECT NEW TURNOUTS TO THE EXISTING ROADWAY/DRIVEWAY (AS SHOWN ON THE PLANS OR AS DIRECTED BY THE CM) SHALL BE INCIDENTAL TO BID ITEM 20401-0000. ANY REQUIRED AGGREGATE BASE AND/OR ASPHALT MATERIAL SHALL BE PAID FOR UNDER THE APPROPRIATE BID ITEMS FOR THIS WORK AS SHOWN IN THE BID SCHEDULE.

12. THE CONTRACTOR SHALL BE REQUIRED TO OBLITERATE ALL EXISTING ABANDONED TURNOUTS AND ROADWAY WITHIN THE RIGHT-OF-WAY LIMITS, AND ANY EXISTING TURNOUTS/ROADWAY OUTSIDE OF THE RIGHT-OF-WAY THAT ARE DESIGNATED ON THE PLANS FOR OBLITERATION. OBLITERATION SHALL BE AS PER FP-14, METHOD 2. SCARIFICATION SHALL BE TO A DEPTH OF 12 INCHES. THE SCARIFIED SURFACE SHALL BE LEFT ROUGH, WITH 4 INCH TO 12 INCH HIGH RIDGES PERPENDICULAR TO THE EXISTING ROAD CENTERLINE. ROADWAY OBLITERATION INCLUDES GRADING DRAINAGE CHANNELS ACROSS THE OLD ROADBED, TO RE-ESTABLISH NATURAL DRAINAGE CHANNELS AND/OR TO OPEN CHANNELS FOR THE NEWLY INSTALLED (IN NEW ROADWAY) DRAINAGE STRUCTURES. THIS WORK TO BE INCLUDED IN THE BID ITEM 21102-2000. PERMANENT SEEDING AND STRAW MULCHING SHALL BE APPLIED TO ALL OBLITERATION AREAS, WITHIN THE CONSTRUCTION LIMITS. SEEDING AND MULCHING TO BE PAID UNDER ITEM 62510-1000.

13. STRUCTURAL EXCAVATION AND BEDDING/BACKFILL OF ALL DRAINAGE STRUCTURES (CULVERTS AND CONCRETE HEAD/WING WALLS) SHALL BE CONSIDERED INCIDENTAL TO THE INSTALLATION OF STRUCTURES. BEDDING AND BACKFILL MATERIAL SHALL MEET ALL REQUIREMENTS OF FP-14, SECTIONS 209 AND 704. APPROVED EXCESS EXCAVATION MATERIAL MAY BE USED TO REBUILD TURNOUTS, EARTHEN DITCH BLOCKS, AND/OR PLACED ALONG ROADWAY SHOULDERS AS EMBANKMENT IN AREAS ADJACENT TO THE REMOVAL AND AS DIRECTED BY THE CM.

14. ALL FURROW AND DRAINAGE DITCHES SHALL BE SHAPED AND GRADED TO DRAIN UP TO THE RIGHT-OF-WAY LIMITS. EARTHEN DITCH BLOCKS, DIKES AND DITCHES SHALL BE CONSTRUCTED AS SHOWN ON THESE PLANS AND/OR ADDED AT LOCATIONS DESIGNATED BY THE CM. ALL DITCH BLOCKS, DIKES AND FURROW DITCHES SHALL BE PAID FOR UNDER THE APPROPRIATE BID ITEMS FOR THIS WORK AS SHOWN IN THE BID SCHEDULE. AT ALL DRAINAGE PIPE REPLACEMENTS, INSTALLATIONS, EXTENSIONS, AND IN-PLACE PIPE CLEANING LOCATIONS, THE CONTRACTOR SHALL CLEAN, REGRADE, AND RESHAPE THE INLET AND OUTLET CHANNELS TO THE RIGHT-OF-WAY LINE AS DIRECTED BY THE CM. THIS WORK SHALL BE INCIDENTAL TO BID ITEMS FOR SECTIONS 602, 603, AND/OR 607.

15. IMMEDIATELY PRIOR TO PLACING EMBANKMENT, AGGREGATE BASE AND/OR RECYCLED MATERIAL, THE TOP 6 INCHES OF THE ORIGINAL GROUND, OR FINISHED SUBGRADE (INCLUDING TURNOUTS) SHALL BE CHECKED FOR COMPACTION AND GRADE. IF COMPACTION DOES NOT MEET THE MINIMUM SPECIFIED COMPACTION AND TOLERANCE REQUIREMENTS, THE ORIGINAL GROUND AND/OR SUBGRADE SHALL BE RE-WATERED AND/OR SCARIFIED AS NEEDED AND RE-COMPACTED TO THE REQUIRED DENSITY AND TOLERANCE, AT THE CONTRACTOR'S EXPENSE. IN NO CASE SHALL ANY EMBANKMENT OR SURFACING MATERIAL BE PLACED ON FROZEN, MUDDY OR UNSUITABLE NATURAL GROUND OR SUBGRADE. THIS WORK SHALL BE CONSIDERED AN INCIDENTAL OBLIGATION OF THE CONTRACTOR.

16. THE EARTHWORK TABLE SHOWN IS TO ASSIST THE CONTRACTOR IN ESTABLISHING A BID. UNDER THE EARTHWORK ITEMS SHOWN IN THE BID SCHEDULE, ANY BORROW MATERIAL CALLED FOR ON THE PLANS SHALL BE TAKEN FROM CONTRACTOR IDENTIFIED SOURCES OUTSIDE THE RIGHT-OF-WAY LIMITS. IT IS THE SOLE RESPONSIBILITY AND EXPENSE OF THE CONTRACTOR TO PROVIDE ANY NECESSARY BORROW MATERIAL FOR THIS PROJECT INCLUDING ALL NECESSARY PERMITS, ALL EXCAVATION, BORROW, WASTE AND EMBANKMENT MATERIAL SHALL BE INCLUDED IN THE UNIT PRICE BID FOR ITEMS 20401-0000 AND 20410-0000. IF MATERIAL IS APPROVED, THE WASTE MATERIAL SHOWN ON THESE PLANS SHALL BE USED AS NECESSARY TO CONSTRUCT TURNOUTS, DITCH BLOCKS, AND/OR BE PLACED AS EMBANKMENT ALONG THE SHOULDERS IN AREAS AS DIRECTED BY THE CM. WASTE MATERIAL NOT USED WITHIN THE PROJECT LIMITS, SHALL BE DISPOSED OF AS PER FP-14, SECTION 204.14.

17. AT ALL TOP EDGES OF CUT SLOPES 10 FEET OR HIGHER THAN THE DITCH FLOWLINE, THE CONTRACTOR SHALL REMOVE ALL LOOSE AND UNSTABLE ROCK OR ROCK THAT AS DETERMINED BY THE CM, MAY BECOME LOOSE WITHIN 15 FEET OF THE TOP CUT SLOPE. THIS WORK SHALL BE CONSIDERED INCIDENTAL TO BID ITEM 2940 -0000, AND NO ADDITIONAL PAYMENT WILL BE MADE.

18. THE LOCATION OF UTILITIES AS SHOWN ON THESE PLANS ARE APPROXIMATE AND ARE ONLY TO ASSIST THE CONTRACTOR IN COMPLETING THE WORK. THE CONTRACTOR SHALL CONTACT ALL UTILITY OWNERS PRIOR TO STARTING ANY CONSTRUCTION ACTIVITIES. SEE UTILITY CONTACT INFORMATION THIS SHEET. THE CONTRACTOR SHALL VERIFY ALL UTILITIES AND THEIR LOCATIONS WITH THE UTILITY OWNERS PRIOR TO CONSTRUCTION. ANY UTILITIES DAMAGED DUE TO NEGLIGENCE OF THE CONTRACTOR SHALL BE RESTORED TO CODE REQUIREMENTS AT THE CONTRACTOR'S EXPENSE.

19. THE CONTRACTOR SHALL REMOVE, CLEAN, AND STOCKPILE ALL SALVAGEABLE EXISTING CULVERTS, GUARDRAIL, CATTLE GUARDS, FENCING MATERIALS, ETC. AS CALLED FOR ON THESE PLANS AND/OR SECTIONS 203 AND 607 IN A DESIGNATED LOCATION ADJACENT TO THE REMOVAL LOCATION BUT OUTSIDE OF THE RIGHT-OF-WAY. THE CM SHALL OFFER THIS SALVAGED MATERIALS TO THE COMMUNITY MEMBERS AND/OR PROPERTY OWNERS. IF THEY ACCEPT, THE MATERIALS MUST BE PICKED UP THAT SAME DAY, AND PIPE MATERIALS DETERMINED TO BE UNUSABLE BY THE CM OR UNACCEPTABLE BY THE LAND OWNER/ COMMUNITY MEMBERS SHALL BE DISPOSED OF BY THE CONTRACTOR IN ACCORDANCE WITH SECTIONS 107, AND 203. THE SALVAGE WORK SHALL BE INCLUDED IN THE APPROPRIATE UNIT PRICE BID ITEMS FOR SECTIONS 203 AND/OR 607.

20. THE CONTRACTOR SHALL BE REQUIRED TO REPAIR ALL DENTED, BENT OR OTHERWISE DAMAGED PIPE EDGES FOR THE SECTION AS CALLED FOR REPAIR WORK. THIS WORK SHALL MEET THE APPROVAL OF THE CM, AND IS EXPECTED TO INCLUDE STRAIGHTENING OF DENTED/BENTED CULVERT EDGES, WELDING OF CUTS/TEARS IN THE EXISTING CULVERTS, TRIMMING BACK THE EXISTING CULVERT TO CREATE AN END SUITABLE FOR AN EXTENSION COLLAR, ETC. NO SEPARATE PAYMENT FOR THIS WORK WILL BE MADE. THE CONTRACTOR SHALL CONSIDER THESE REPAIRS INCIDENTAL TO THE DRAINAGE PIPE BID ITEMS UNDER SECTION 602, AND 603.

21. THE ROADWAY TYPICAL SECTION SHOWN IS THE BASIC TEMPLATE TO WHICH THE PROJECT IS TO BE STAKED AND BUILT. HOWEVER, THERE WILL BE LOCATIONS WHERE, DUE TO EXISTING GROUND CONDITIONS, TURNOUTS, CULVERTS OR OTHER STRUCTURES, ETC., THE

GENERAL NOTES CONTINUED:

SHOWN TYPICAL SLOPES CANNOT BE CONSTRUCTED. IN THIS CASE, THE ENGINEER OF RECORD, THROUGH THE CM, SHALL BE CONSULTED FOR CHANGES IN THE TYPICAL SECTIONS, DESIGN SLOPES, AND/OR OTHER ADJUSTMENTS BEFORE PROCEEDING WITH THE WORK UNLESS NOTED OTHERWISE ON THE PLANS. THE FINAL CONSTRUCTED ROAD SECTION SHALL BE BASED ON THE GOVERNMENT FURNISHED CROSS SECTIONS AS ADJUSTED TO FIT FIELD CONDITIONS. THE CONTRACTOR SHALL STAY WITHIN THE LIMITS OF CONSTRUCTION, UNLESS OTHERWISE APPROVED. IN NO CASE SHALL THE CUT AND FILL BACK SLOPES BE BUILT STEEPER THAN THE MAXIMUM ALLOWED IN THE ROADWAY TYPICAL SECTION SHOWN.

22. THE CONTRACTOR SHALL SAW CUT (FULL DEPTH) THE EXISTING ASPHALT PAVEMENT (INCLUDING TURNOUTS) WHERE NEW ASPHALT IS TO TIE INTO THE OLD ASPHALT PAVEMENT AT THE LOCATIONS NOTED ON THE PLANS. THE CONTRACTOR SHALL MATCH THE NEW ASPHALTIC CONCRETE PAVEMENT SURFACE TO EXISTING PAVEMENT SECTION TIE-IN POINTS AND TO PROVIDE A SMOOTH TRANSITION AS DIRECTED BY THE CM. ALL SAWED PAVEMENT EDGES TO RECEIVE ASPHALT TACK COAT. THIS WORK SHALL BE INCIDENTAL TO BID ITEM 40201-0500 AS SHOWN IN THE BID SCHEDULE.

23. THERE ARE ARCHAEOLOGICAL SITES ALONG THE PROJECT CORRIDOR THAT REQUIRE AN ARCHAEOLOGIST PRESENT DURING CONSTRUCTION IN THE AREA AND OTHER SITES REQUIRING TEMPORARY ORANGE SAFETY FENCE TO BE PLACED BEFORE ANY WORK IN THE AREA CAN BEGIN. THE CONTRACTOR & CM SHALL COORDINATE THIS WORK WITH THE NDOT PROJECT MANAGEMENT OFFICE, MRT BLACKHORSE (505-371-8394), OR ANJANETTE HAWK (505-371-8368). UNDER NO CIRCUMSTANCE CAN THE CONTRACTOR DO ANY CONSTRUCTION WORK IN AREAS REQUIRING THESE MITIGATION REQUIREMENTS UNTIL THE SAFETY FENCING AND/OR AN NDOT ARCHAEOLOGIST IS PRESENT.

24. THE FINISHED SUBGRADE SOIL CLASSIFICATION AND PI'S WILL BE DETERMINED PRIOR TO SUBGRADE TREATMENT. THE FINAL MATERIAL USED AND LOCATIONS FOR SUBGRADE TREATMENT WILL BE DETERMINED BY THE ENGINEER OF RECORD AND CM, AND PROVIDED TO THE CONTRACTOR PRIOR TO STARTING WORK. PROPOSED DEPTH OF TREATMENT IS 12 INCHES.

25. THE CONTRACTOR WILL INCLUDE THE COST OF WATER NEEDED IN ITEMS 20401 ROADWAY EXCAVATION, 20410 BORROW, 21301 SUBGRADE STABILIZATION, 30101 AGGREGATE BASE, AND 62501 SEEDING, IN HIS BID COST FOR THE INDIVIDUAL ITEMS. THE COST FOR WATER WHICH IS NEEDED DURING THE COURSE OF THE PROJECT FOR ALL OTHER BID ITEMS/PURPOSES, INCLUDING DUST CONTROL AND FOUNDATION COMPACTION, WILL ALSO BE INCLUDED IN THE OVERALL BID COST FOR THE PROJECT. THE CONTRACTOR WILL BE RESPONSIBLE FOR COMPUTING HIS OWN WATER QUANTITIES AND THEN BASING HIS BID ON HIS OWN COMPUTED QUANTITIES. NO SEPARATE MEASUREMENT OR PAYMENT WILL BE MADE.

ENVIRONMENTAL MITIGATIONS:

1. SITE NM-H-34-68 AND SITE NM-H-34-70:
   1. CONSTRICT CONSTRUCTION ACTIVITIES TO THE ROAD PRISM FOR THE LENGTH OF THE SITE BOUNDARY.
   2. SITE BOUNDARY TO BE TEMPORARILY FENCED OR BARRICADED PRIOR TO CONSTRUCTION. SEE SHT 11 AND 12. THIS WORK SHALL BE CONSIDERED INCIDENTAL TO BID ITEM 63501-0000 TEMPORARY TRAFFIC CONTROL PLAN.
   3. MONITORING WITHIN 50 FEET OF SITE BOUNDARY BY AN NDOT QUALIFIED ARCHAEOLOGIST DURING CONSTRUCTION.
   4. NO RUBBER-TIRED VEHICLES SHALL BE USED TO INSTALL ROW FENCE. FENCE SHALL BE INSTALLED BY HAND. SEE SHT 11 AND 12.

UTILITY CONTACTS:

WATER & WASTEWATER (SANITARY SEWER)

NAVAJO TRIBAL UTILITY AUTHORITY
P.O. BOX 170
FT. DEFIANCE, AZ 86504
CONTACT PERSON: ADRIAN SHOWALTER
PHONE: (928) 729-5721, EXT. 2340
FAX: (928) 729-6240
EMAIL: adrians@ntua.com

TELECOMMUNICATIONS

FRONTIER COMMUNICATION
STATE HIGHWAY 264
ST. MICHAELS, ARIZONA 86511
CONTACT PERSON: SHAWN MITCHELL
PHONE: 928-871-5581
FAX: -
EMAIL: shawn.mitchell@str.com

ELECTRIC POWER

NAVAJO TRIBAL UTILITY AUTHORITY
HWY 4 12N
FORT DEFIANCE, AZ 86504
CONTACT PERSON: ART McCABE
PHONE: (928) 729-5721
EMAIL: artm@ntua.com

NEW MEXICO ONE CALL

PH #811 OR (505)-260-1990

DEREK D. MEIER
NEW MEXICO
14504
LICENSED PROFESSIONAL ENGINEER
9/8/20

NAVAJO DIVISION OF TRANSPORTATION

GENERAL NOTES AND UTILITY CONTACTS

Designed by: MKC	Date: 7/19	NAVAJO D.O.T
Drawn by: ELO	Date: 7/19	
Checked by: DDM	Date: 7/19	
File Name: 1709010_GEN_NTS.DWG		

M:\TRN\17-100-090-10\2_DISCIPLINES_SHEETS\2_SHEETS - CIVIL\1709010_GEN_NTS_.DWG 9/8/2020 12:51 PM

REGION	STATE	RESERVATION	ROUTE	PROJECT NO.	SHEET	TOTAL SHEETS
NORTH	NEW MEXICO	NAVAJO	N5012	N5012(1)1,2&4	3	75

SUMMARY OF QUANTITIES

F.P. - 14 ITEM NO.	ITEM DESCRIPTION	UNIT	QUANT	AS-BUILT
	N5012 ROADWAY			
15101-0000	MOBILIZATION	LPSM	1	
15201-0000	CONSTRUCTION SURVEY AND STAKING	LPSM	1	
15301-0000	CONTRACTOR QUALITY CONTROL	LPSM	1	
15701-0000	SOIL EROSION CONTROL, TEMPORARY	LPSM	1	
20102-0000	CLEARING AND GRUBBING	LPSM	1	
20304-1000	REMOVAL OF STRUCTURES AND OBSTRUCTIONS	LPSM	1	
20401-0000	ROADWAY EXCAVATION	CUYD	9,600	
20410-0000	BORROW	CUYD	4,900	
20801-0000	STRUCTURE EXCAVATION	CUYD	288	
20803-0000	STRUCTURAL BACKFILL	CUYD	596	
21301-0000	SUBGRADE STABILIZATION (12")	SQYD	12,900	
25101-0100	PLACED RIPRAP, METHOD A, CLASS 1	CUYD	37	
25101-0200	PLACED RIPRAP, METHOD A, CLASS 2	CUYD	5	
25112-2000	WIRE-ENCLOSED RIPRAP, CLASS 2	CUYD	538	
30101-2000	AGGREGATE BASE, GRADING D	TON	4,050	
40702-1100	CHIP SEAL, TYPE 2A	SQYD	11,300	
41101-5000	ASPHALT PRIME COAT (PEP)	TON	21	
55201-0100	STRUCTURAL CONCRETE CLASS A	CUYD	34	
55201-0200	STRUCTURAL CONCRETE, CLASS A (AE)	CUYD	206	
55302-3300	PRECAST, PRESTRESSED CONCRETE AASHTO GIRDER	LNFT	402	
55401-1000	REINFORCING STEEL	LBS	26,775	
55401-2000	REINFORCING STEEL, EPOXY COATED	LBS	29,860	
55502-0000	STRUCTURAL STEEL, FURNISHED, FABRICATED, AND ERECTED	LBS	2,530	
55601-0500	BRIDGE RAILING, CONCRETE 42"	LNFT	264	
55901-0000	MEMBRANE WATERPROOFING	SQYD	396	
56501-0400	DRILLED SHAFT, 36-INCH DIAMETER	LNFT	420	
56505-0000	CROSSHOLE SONIC LOGGING	EACH	8	
60101-0000	CONCRETE	CUYD	21	
60201-0800	24" CULVERT PIPE	LNFT	36	
60210-0800	24" CULVERT PIPE END SECTION	EACH	2	
60201-1000	36" CULVERT PIPE	LNFT	118	
60210-1000	36" CULVERT PIPE END SECTION	EACH	4	
60201-1200	48" CULVERT PIPE	LNFT	140	
60210-1200	48" CULVERT PIPE END SECTION	EACH	2	
60210-1250	END SECTION FOR 48-INCH PIPE CULVERT (WITH SAFETY BARS)	EACH	2	
60201-1600	72" CULVERT PIPE	LNFT	26	
60202-0400	28"Sx20" R(NOMINAL)CULVERT PIPE ARCH	LNFT	32	
60210-1600	72" CULVERT PIPE END SECTION	EACH	2	
60211-0800	28"Sx20" R(NOMINAL)CULVERT PIPE ARCH END SECTION	EACH	2	
61701-5000	GUARDRAIL SYSTEM SGR-04b, TYPE PDE 02 WITH MSKT-TL3-8 END TERMINAL & THRIE BEAM TRANSITION	LNFT	390	
61901-1000	FENCE, BARBED WIRE, 5 STRAND	LNFT	6,660	
61902-1400	GATE, METAL, 16 FEET WIDTH	EACH	1	
61902-2600	GATE, BARBED WIRE, 5-STRAND	EACH	4	
61903-0300	CATTLE GUARD, 16 FEET	EACH	2	
61903-0700	CATTLE GUARD, 24 FEET	EACH	1	
61903-1100	CATTLE GUARD, 32 FEET	EACH	2	
62101-0000	RIGHT OF WAY MONUMENTS	EACH	18	
62102-0000	RIGHT OF WAY MARKERS	EACH	8	
62510-1000	SEEDING, DRY METHOD	ACRE	4.5	
63304-0400	SIGNS , STEEL PANELS, TYPE 9 SHEETING	SQFT	200	
63305-0400	POSTS, STEEL, 2-INCH X 2-INCH	LNFT	420	
63308-2000	OBJECT MARKER, TYPE 2	EACH	6	
63308-3000	OBJECT MARKER, TYPE 3	EACH	4	
63401-1500	PAVEMENT MARKINGS, TYPE H, SOLID	LNFT	13,800	
63405-3101	PAVEMENT MARKINGS, TYPE H, "STOP BAR", 24" SOLID WHITE	EACH	3	
63501-0000	TEMPORARY TRAFFIC CONTROL PLAN	LPSM	1	

DEREK D. MEIER NEW MEXICO 14504 LICENSED PROFESSIONAL ENGINEER 9/8/20

NAVAJO DIVISION OF TRANSPORTATION

SUMMARY OF QUANTITIES

Designed by: MKC	Date: 7/19
Drawn by: ELO	Date: 7/19
Checked by: DDM	Date: 7/19
File Name: N5012_SOQ.DWG	

NAVAJO D.O.T

M:\TRN\17-100-090-10\2_DISCIPLINES_SHEETS\2_SHEETS - CIVIL\1709010_SOQ.DWG 9/16/2020 4:55 PM

REGION	STATE	RESERVATION	ROUTE	PROJECT NO.	SHEET	TOTAL SHEETS
NORTH	NEW MEXICO	NAVAJO	N5012	N5012(1)1,2&4	4	75

SURFACING SCHEDULE

STATION	TO	STATION	LENGTH	DESCRIPTION	21301-0000 SUBGRADE STABLIZATION (12")		30101-2000 AGGREGATE BASE GRADING D				40702-1100 CHIP SEAL, TYPE 2A			41101-5000 ASPHALT PRIME COAT (PEP)	
			(FT)		WIDTH (FT)	S.Y.	WIDTH (FT)	DEPTH (IN)	S.Y.	TON	WIDTH (FT)	DEPTH (IN)	S.Y.	WIDTH (FT)	TON
N5012				FULL CONSTRUCTION											
40+00.00		40+73.19	73.19	Transition to BOP	VARIES	217	VARIES	6.00	217	72	VARIES	0.875	217	VARIES	0.41
40+73.19		74+00.00	3326.81	2-11' lanes, 2-3' shoulders	28.00	10350	28.00	6.00	10350	3425	28.00	0.875	10350	28.00	19.41
40+73.19		74+00.00	3326.81	Tapers	4.34	1604	2.17	6.00	803	266	0.00	0.875	0	0.00	0.00
40+00.00		74+00.00	3400.00	Turnouts	VARIES	490	VARIES	6.00	545	181	VARIES	0.875	490	VARIES	0.84
62+16.00		62+26.00	10.00	Concrete slab for waterline			40.00	6.00	44	15					
74+00.00		74+50.00	50.00	Transition from EOP	VARIES	153	VARIES	6.00	153	51	VARIES	0.875	153	VARIES	0.29
				SUBTOTAL		12,815				4,010			11,210		20.94
				PROJECT USE		12,900				4,050			11,300		21

SURFACING FACTORS

ITEM	** SUBGRADE STABILZATION	* 41101 PRIME COAT	UNIT WEIGHT	* UNIT WEIGHT
		GAL/SY	GAL/TON	TON/CY
Base Course				1.985
Asphalt for Prime Coat		0.450	240	

*FOR ESTIMATING PURPOSES ONLY, ACTUAL WEIGHTS OR PERCENTS SHALL BE DETERMINED BY APPROVED MIX DESIGN.

**SEE GENERAL NOTE 24 ON SHEET 2.

ITEM NO. 61901-1000 - FENCE, BARBED WIRE, 5 STRAND

STATION	TO	STATION	LT/RT	LENGTH (FT)	REMARKS
N5012					
40+73.19		45+07.55	RT	533	TIE TO CG, GATE, & BRIDGE
40+73.19		45+07.55	LT	447	TIE TO CG & BRIDGE
46+39.55		59+63.86	RT	* 1355	TIE TO BRIDGE, DS-03, & DS-02
46+39.55		49+89.47	LT	371	TIE TO BRIDGE, CG, & GATE
50+05.47		74+00.00	LT	* 2458	TIE TO CG, DS-02, & GATE
59+86.12		64+62.00	RT	507	TIE TO CG & GATE
64+78.00		74+00.00	RT	984	TIE TO CG & GATE
SUBTOTAL				3813	
PROJECT USE				3820	

*NOTE: CONTRACTOR SHALL INSTALL FENCE FROM STA 57+00 TO STA 59+00 LT&RT BY HAND DUE TO CULTURALLY SENSITIVE AREA.

ITEM NO. 61902-1400 - GATE, METAL, 16 FEET WIDTH

STATION	LT/RT	EACH	REMARKS
N5012			
43+82.19	RT	1	FOR MAINTENANCE ACCESS
SUBTOTAL		1	
PROJECT USE		1	

ITEM NO. 61902-2600 - GATE, BARBED WIRE, 5-STRAND

STATION	LT/RT	EACH	REMARKS
N5012			
49+58.81	LT	1	16 FEET WIDE
60+15.28	RT	1	16 FEET WIDE
64+70.00	LT	1	16 FEET WIDE
65+08.81	RT	1	16 FEET WIDE
SUBTOTAL		4	
PROJECT USE		4	

ITEM NO. 61903-0300- CATTLE GUARD, 16 FEET

STATION	LOCATION	QUANTITY (EACH)	COMMENTS
N5012			
49+97.47	LT	1	
64+70.00	RT	1	
SUBTOTAL		2	
PROJECT USE		2	

ITEM NO. 61903-0700 - CATTLE GUARD, 24 FEET

STATION	LOCATION	QUANTITY (EACH)	COMMENTS
N5012			
59+74.99	RT	1	
SUBTOTAL		1	
PROJECT USE		1	

ITEM NO. 61903-1100 - CATTLE GUARD, 32 FEET

STATION	LOCATION	QUANTITY (EACH)	COMMENTS
N5012			
40+73.19	CL	1	
74+00.00	CL	1	
SUBTOTAL		2	
PROJECT USE		2	

ITEM NO. 61701-5000 GUARDRAIL SYSTEM SGR-04b, TYPE PDE 02 WITH MSKT-TL3-8 END TERMINAL & THRIE BEAM GUARDRAIL TRANSITION

ID	STATION	TO	STATION	LT/RT	LENGTH (FT)	REMARKS
N5012						
MB-03	43+79.60		45+07.55	RT	127.5	INCLUDES END TERMINAL SYSTEM, STANDARD W-BEAM GUARDRAIL (63 FT) AND THRIE BEAM GUARDRAIL TRANSITION.
MB-01	44+42.55		45+07.55	LT	65	INCLUDES END TERMINAL SYSTEM AND THRIE BEAM GUARDRAIL TRANSITION.
MB-04	46+39.55		47+04.55	RT	65	INCLUDES END TERMINAL SYSTEM AND THRIE BEAM GUARDRAIL TRANSITION.
MB-02	46+39.55		47+67.50	LT	127.5	INCLUDES END TERMINAL SYSTEM, STANDARD W-BEAM GUARDRAIL (63 FT) AND THRIE BEAM GUARDRAIL TRANSITION.
SUBTOTAL					385	
PROJECT USE					390	

ITEM NO. 20304-1000 - REMOVAL OF STRUCTURES AND OBSTRUCTIONS

STATION	TO	STATION	LOC	QUANTITY	UNIT	STRUCTURE	REMARKS
N5012							
44+40.50			LT/RT	1	EACH	84" X 65' CMP	REMOVE & SALVAGE IN SANOSTEE CHAPTER YARD
46+33.30			LT/RT	1	EACH	96" X 72'CMP	REMOVE & SALVAGE IN SANOSTEE CHAPTER YARD
47+61.01			LT/RT	1	EACH	36" X 72' CMP	REMOVE & SALVAGE IN SANOSTEE CHAPTER YARD
59+23.75			LT/RT	2	EACH	24" X 40' CMP	REMOVE & SALVAGE IN SANOSTEE CHAPTER YARD

NOTE: SEE GENERAL NOTE 19 ON SHEET 2.

DEREK D. MEIER NEW MEXICO 14504 LICENSED PROFESSIONAL ENGINEER 9/8/20

NAVAJO DIVISION OF TRANSPORTATION

MISCELLANEOUS QUANTITIES

Designed by: MKC	Date: 7/19
Drawn by: ELO	Date: 7/19
Checked by: DDM	Date: 7/19
File Name: 1709010_MQ.DWG	

NAVAJO D.O.T

M:\TRN\17-100-090-10\2_DISCIPLINES_SHEETS\2_SHEETS - CIVIL\1709010_MQ.DWG 9/16/2020 4:50 PM

REGION	STATE	RESERVATION	ROUTE	PROJECT NO.	SHEET	TOTAL SHEETS
NORTH	NEW MEXICO	NAVAJO	N5012	N5012(1)1,2&4	5	75

ESTIMATED DRAINAGE STRUCTURE QUANTITIES

DS-XX	STATION	TO	STATION	LOC	SKEW	60201-0800 24" CULVERT PIPE LF	60210-0800 24" CULVERT PIPE END SECTION EA	60201-1000 36" CULVERT PIPE LF	60210-1000 36" CULVERT PIPE END SECTION EA	60201-1200 48" CULVERT PIPE LF	60210-1200 48" CULVERT PIPE END SECTION EA	60210-1250 48" CULVERT PIPE END SECTION (WITH SAFETY BARS) EA	60201-1600 72" CULVERT PIPE LF	60210-1600 72" CULVERT PIPE END SECTION EA	60202-0400 28"Sx20" R(NOMINAL) CULVERT PIPE ARCH LF	60211-0800 28"Sx20" R(NOMINAL) CULVERT PIPE ARCH END SECTION EA	25112-2000 WIRE-ENCLOSED RIPRAP, CLASS 2 CY	NOTES
	42+00.00		44+88.00	LT													134	27' x 268' x 0.5'
	44+88.00		44+91.50	LT													2.1	37.5' x 3' x 0.5'
	44+99.00		45+10.00	LT													7.5	37' x 11' x 0.5'
	45+09.99		45+28.22	LT													3.1	10' x 17' x 0.5'
DS-01	47+60.57			LT/RT	8° RT FWD			88	2									
TDS-01	49+97.42			LT	NORMAL TO TO-01			30	2								1.8	5' x 9.5' x 1'
DS-02	55+03.57			LT/RT	10° LT FWD								26	2				
DS-03	59+23.75			LT/RT	30° LT FWD					140	2	2					53.0	2 x 10' x 28' x 1' ; 21' x 41.5' x 1'
TDS-02	59+74.99			RT	13° RT FWD	38	2										1.5	5' x 8' x 1'
TDS-03	64+70.00			RT	NORMAL TO TO-03										32	2	1.5	5' x 8' x 1'
SUBTOTAL						38	2	118	4	140	2	2	26	2	32	2	204.5	
PROJECT USE						38	2	118	4	140	2	2	26	2	32	2	205	

EARTHWORK SUMMARY

STATION	TO	STATION	LOCATION	20401-0000 ROADWAY EXCAVATION CU YD	EMBANKMENT* CU YD	SHRINK (15%) CU YD	20410-0000 SELECT BORROW CU YD	NOTES
N5012								
40+00.00		45+21.80	LT & RT	122	2,500	375	2,753	
45+21.80		46+25.30	LT & RT	0	0	0	0	BRIDGE LIMITS
46+25.30		74+00.00	LT & RT	9,449	9,657	1,449	1,657	
TURNOUTS			LT & RT	6	382	57	433	
			SUBTOTAL	9577			4842	
			PROJECT USE	9600			4900	

*FOR CONTRACTORS INFORMATION ONLY

CONCRETE SLAB/BLANKET FOR WATERLINE ESTIMATED QUANTITIES

STATION	OFFSET	LOC	55401-1000 REINFORCING STEEL LB	60101-0000 CONCRETE CY	NOTES
62+21.00	19' TO 59'	LT	267.20	7.41	10'x40'x0.5' CONCRETE SLAB/BLANKET FOR 6" WATERLINE
SUBTOTAL			267.20	7.41	
PROJECT USE			270	8	

***NOTE**: WATERPROOF PLASTIC POLY SHEET 10MIL SHALL BE CONSIDERED INCIDENTAL TO BID ITEM 60101-0000, CONCRETE.

ITEM NO. 62510-1000- SEEDING, DRY METHOD

STATION	TO	STATION	LOCATION	AREA (ACRES)	COMMENTS
N5012					
40+00.00		74+00.00	LT & RT	4.1	
SUBTOTAL				4.1	
PROJECT USE				4.5	

NOTE: SEED MIX REQUIRES NDOT APPROVAL

ITEM NO. 25101-0200 - PLACED RIPRAP, METHOD A, CLASS 2

STATION	TO	STATION	LOCATION	CUYD	COMMENTS
N5012					
43+62.32			LT	2.36	CHECK DAM
44+87.00			LT	2.36	CHECK DAM
SUBTOTAL				4.72	
PROJECT USE				5.0	

NOTE: SEE DETAILS ON SHEET 8.

DEREK D. MEIER NEW MEXICO 14504 LICENSED PROFESSIONAL ENGINEER 9/16/20

NAVAJO DIVISION OF TRANSPORTATION

MISCELLANEOUS QUANTITIES

Designed by: MKC	Date: 7/19		NAVAJO D.O.T
Drawn by: ELO	Date: 7/19		
Checked by: DDM	Date: 7/19		
File Name: 170901_MQ.DWG			

M:\TRN\17-100-090-10\2_DISCIPLINES_SHEETS\2_SHEETS - CIVIL\1709010_MQ.DWG 9/16/2020 4:51 PM

REGION	STATE	RESERVATION	ROUTE	PROJECT NO.	SHEET	TOTAL SHEETS
NORTH	NEW MEXICO	NAVAJO	N5012	N5012(1)1,2&4	6	75

PERMANENT SIGNING ESTIMATED QUANTITIES

			ITEM NO. 63304-0400 SIGNS, STEEL PANELS, TYPE 9 SHEETING	POST LENGTHS				MOUNTING REQUIREMENTS	BASE POSTS		ITEM NO. 63305-0400 POSTS, STEEL, 2-INCH X 2-INCH	NOTES
SIGN CODE	SIGN AREA (SF)	NO. OF SIGNS	TOTAL SIGN AREA (SF)	LEFT (LF)	CENTER (LF)	RIGHT (LF)	TOTAL (LF)	DRIVEDOWN POSTS 2.0 X 2.0	NO. (EACH)	TOTAL LENGTH (LF)	TOTAL LENGTH (LF)	
PERMANENT SIGNING												
N5012												
R1-1-30	6	3	19		11		32	3.5	3	10.5	42.5	
R2-1-24-35	5	4	20		11		42	3.5	4	14.0	56.5	
R4-1-18	3	2	6		10		20	3.5	2	7.0	27.0	
D3-1-1	1	3	4									*
D3-1-2	2	1	2									*
D3-1-3	2	1	2									*
D3-1-4	2	1	2									*
W14-3-40	4	2	8		11		22	3.5	2	7.0	29.0	
W1-2R-30	6	1	6		11		11	3.5	1	3.5	14.5	
W1-2L-30	6	1	6		11		11	3.5	1	3.5	14.5	
W1-8R-18	3	9	27		6		54	3.5	9	31.5	85.5	
W1-8L-18	3	9	27									*
W2-2R-30	6	3	19		11		32	3.5	3	10.5	42.5	
W2-2L-30	6	3	19		11		32	3.5	3	10.5	42.5	
W8-3-30	6	2	13		11		21	3.5	2	7.0	28.0	
W8-13-30	6	2	13		11		21	3.5	2	7.0	28.0	
SUBTOTAL			191								410	
PROJECT USE			**200**								**420**	

* NO ADDITIONAL POST NEEDED. SIGN TO BE MOUNTED ON COMMON POST WITH ANOTHER SIGN.

ITEM NO. 63308-2000 - OBJECT MARKER, TYPE 2

STATION	LOCATION	QUANTITY (EACH)	COMMENTS
N5012			
47+60.57	LT & RT	2	DS-01
55+03.57	LT & RT	2	DS-02
59+23.75	LT & RT	2	DS-03
SUBTOTAL		6	
PROJECT USE		6	

ITEM NO. 63308-3000 - OBJECT MARKERS, TYPE 3

STATION	LOCATION	QUANTITY (EACH)	COMMENTS
N5012			
45+09.00	LT & RT	2	BRIDGE ABUTMENT NO.1
46+38.00	LT & RT	2	BRIDGE ABUTMENT NO.2
SUBTOTAL		4	
PROJECT USE		4	

ITEM NO. 62102-0000 - ROW MARKERS

STATION	LOCATION	OFFSET	QUAN (EACH)	COMMENTS
40+73.19	RT	75.00	1	BEGIN ROW
40+73.19	LT	75.00	1	BEGIN ROW
43+79.00	LT/RT	165.00	2	ROW JOG
47+50.00	LT/RT	165.00	2	ROW JOG
74+00.00	RT	75.00	1	END ROW
74+00.00	LT	75.00	1	END ROW
SUBTOTAL			**8**	
PROJECT USE			**8**	

STATION	TO	STATION	LOCATION	ITEM NO. 63401-1500 PAVEMENT MARKINGS,TYPE H, SOLID		ITEM NO. 63405-3101 - PAVEMENT MARKINGS, TYPE H, "STOP BAR"
				4" SOLID WHITE	4" SOLID YELLOW	24" WIDE, SOLID WHITE
				LF	LF	EACH
PERMANENT STRIPING						
N5012						
40+00.00		74+50.00	BOP to EOP, Outside solid white	6900		
40+00.00		74+50.00	BOP to EOP, Double yellow centerline		6900	
49+97.47			Stop bar at N5012/RD 9276 Intersection			1
59+74.99			Stop bar at N5012/RD 9400 Intersection			1
64+70.00			Stop bar at N5012/RD 9450 Intersection			1
SUBTOTAL				6900	6900	3
PROJECT USE				**13800**		**3**

ITEM NO. 62101-0000 - ROW MONUMENTS

STATION	LOCATION	OFFSET	QUAN (EACH)	COMMENTS
40+73.19	RT	75.00	1	BEGIN ROW
40+73.19	LT	75.00	1	BEGIN ROW
43+65.87	RT	75.00	1	PT
43+65.87	LT	75.00	1	PT
43+79.00	RT	75.00	1	CORNER
43+79.00	RT	165.00	1	CORNER
43+79.00	LT	75.00	1	CORNER
43+79.00	LT	165.00	1	CORNER
47+50.00	RT	75.00	1	CORNER
47+50.00	RT	165.00	1	CORNER
47+50.00	LT	75.00	1	CORNER
47+50.00	LT	165.00	1	CORNER
58+41.68	RT	75.00	1	PC
58+41.68	LT	75.00	1	PC
62+83.63	RT	75.00	1	PT
62+83.63	LT	75.00	1	PT
74+00.00	RT	75.00	1	END ROW
74+00.00	LT	75.00	1	END ROW
SUBTOTAL			**18**	
PROJECT USE			**18**	

DEREK D. MEIER NEW MEXICO 14504 LICENSED PROFESSIONAL ENGINEER 9/8/20

NAVAJO DIVISION OF TRANSPORTATION

MISCELLANEOUS QUANTITIES

Designed by: MKC	Date: 7/19	NAVAJO D.O.T
Drawn by: ELO	Date: 7/19	
Checked by: DDM	Date: 7/19	
File Name: 1709010_MQ.DWG		

M:\TRN\17-100-090-10\2_DISCIPLINES_SHEETS\2_SHEETS - CIVIL\1709010_MQ.DWG 9/16/2020 4:51 PM

REGION	STATE	RESERVATION	ROUTE	PROJECT NO.	SHEET	TOTAL SHEETS
NORTH	NEW MEXICO	NAVAJO	N5012	N5012(1)1,2&4	7	75

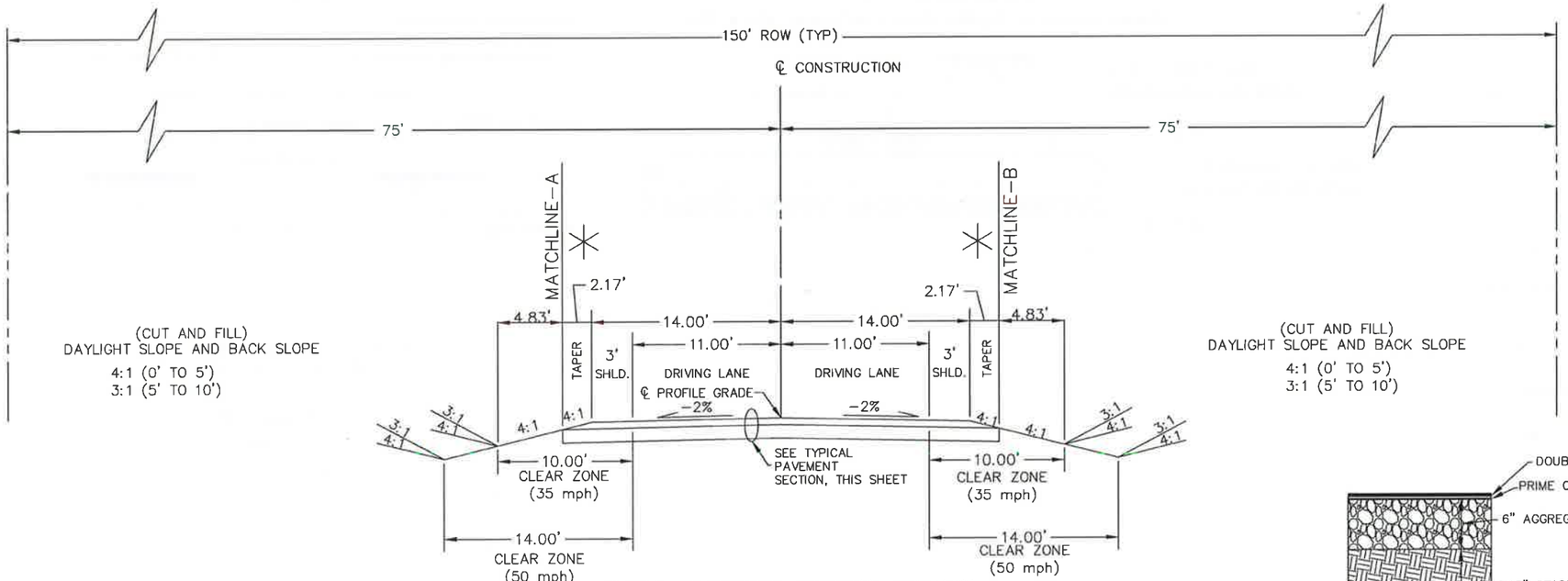

N5012 PROPOSED TYPICAL SECTION

TRANSITION TO PROPOSED TYPICAL SECTION STA 40+00.00 TO STA 40+73.19
STA 40+73.19 TO STA 74+00.00
TRANSITION PROPOSED TYPICAL SECTION TO MATCH EXISTING STA 74+00.00 TO STA 74+50.00

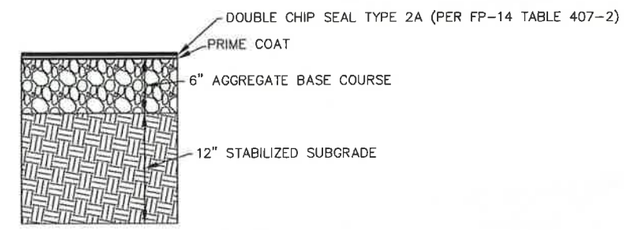

TYPICAL PAVEMENT SECTION

SCALE: NONE

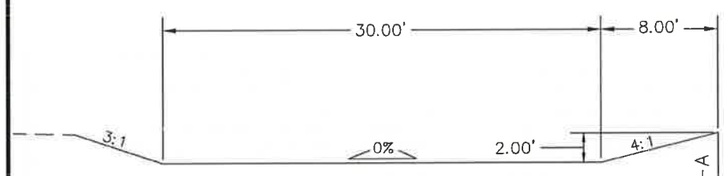

PROPOSED SPECIAL DITCH SECTION

STA 60+50.00 TO EOP STA 74+00.00-LT.

MATCHLINE-A

STA 59+42.42 – LT DS-03 INLET INV: 5924.51 TO
STA 60+50.00 – LT ROADSIDE CHANNEL INV: 5929.94
TRANSITION DITCH NORTH FROM INLET DS-03 TO MATCH ROADSIDE 30' WIDE CHANNEL SECTION. SLOPE = +5.12%

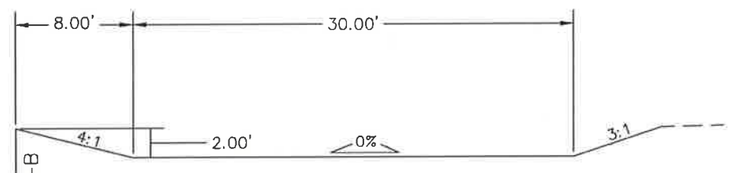

PROPOSED SPECIAL DITCH SECTION

STA 60+50.00 TO EOP STA 74+00.00-RT.

MATCHLINE-B

STA 59+97.10 – 31.50' RT. TDS-02 INLET INV: 5930.59 TO
STA 60+50.00 – RT CHANNEL INV: 5931.57
TRANSITION 5.5' WIDE DITCH CHANNEL FROM TDS-02 INLET TO MATCH 30' WIDE ROADSIDE CHANNEL SECTION. SLOPE = +0.95%.

STA 64+00.00 – RT CHANNEL INV: 5934.01 TO
STA 64+50.29 – 31.44' RT TDS-03 OUTLET INV: 5935.14
TRANSITION ROADSIDE CHANNEL SECTION FROM 30' WIDE TO 5.5' WIDE AT TDS-03 OUTLET. SLOPE = = +2.18%

STA 64+88.20 – 31.44' RT. TDS-03 INLET INV: 5935.59 TO
STA 65+50.00 – RT CHANNEL INV: 5935.86
TRANSITION 5.5' WIDE DITCH CHANNEL FROM TDS-03 OUTLET TO MATCH 30' WIDE ROADSIDE CHANNEL SECTION. SLOPE = +0.44%

DEREK O. MEIER
NEW MEXICO
14504
LICENSED PROFESSIONAL ENGINEER
9/8/20

NAVAJO DIVISION OF TRANSPORTATION

TYPICAL SECTIONS

Designed by: MKC	Date: 7/19	NAVAJO D.O.T
Drawn by: ELO	Date: 7/19	
Checked by: DOM	Date: 7/19	
File Name: 1709010_TYP_SEC_DWG		

M:\TRN\17-100-090-10\2_DISCIPLINES_SHEETS\2_SHEETS - CIVIL\1709010_TYP_SEC_DWG 9/16/2020 4:57 PM

REGION	STATE	RESERVATION	ROUTE	PROJECT NO.	SHEET	TOTAL SHEETS
NORTH	NEW MEXICO	NAVAJO	N5012	N5012(1)1,2&4	8	75

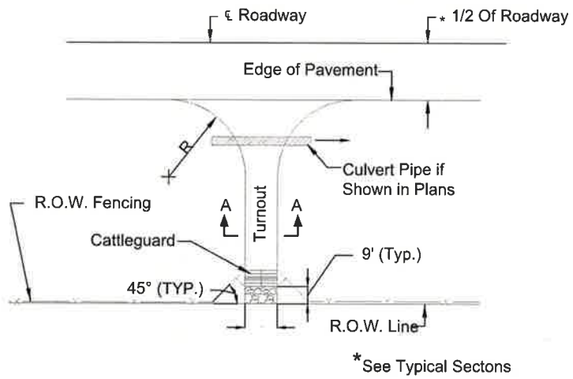

TYPICAL TURNOUT

Note: In The Event the Turnout Cattle Guard is Located Within the Turnout Radii, So That the Asphalt/Gravel/Dirt Width is Narrower on the Back Side of the Cattle Guard Than on the Front Side, the Asphalt/Gravel/Dirt Width on the Back Side Shall be Widened to Match the Width on the Front Side and Tapered Back to the Standard Roadway/Driveway Width in 16'. This Work Shall be Included in the Earthwork, Gravel, Asphalt, etc. Bid Items as Appropriate.

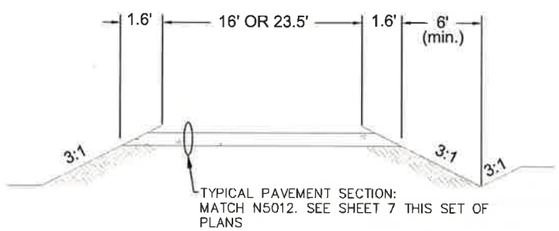

SECTION A-A

NOTE: TYPICAL TURNOUT DIMENSIONS AND STRUCTURAL SECTION UNLESS NOTED OTHERWISE ON THE PLANS

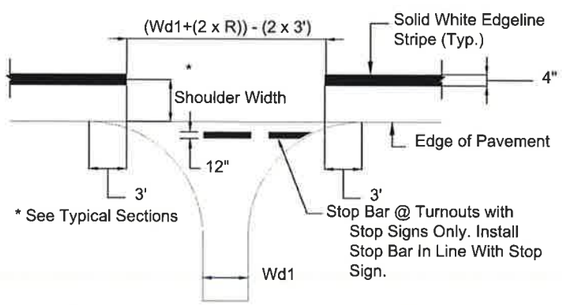

TYPICAL PAVEMENT MARKING @ TURNOUT

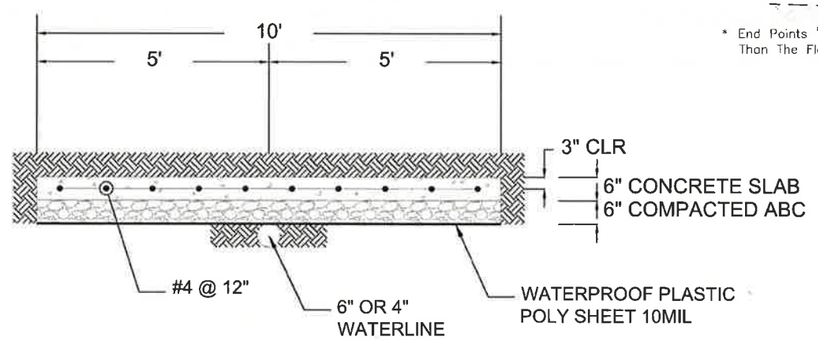

40' X 10' TYPICAL CONCRETE SLAB/BLANKET FOR 6" WATERLINE

NOTE: WATERLINE CROSSING CONCRETE SLAB IS 40-FEET IN WIDTH. SEE SHEET 12.

CHECK DAM NOTES

1. Workmanship And Materials Shall Conform To The Standard Specifications For Construction Of Roads And Bridges On Federal Highway Projects (FP-14) Along With All Supplemental Specifications For This Project.
2. Riprap Check Dams Shall Be Placed Prior To Cross Scarifying The Existing Road Bed To Prevent Recompacting The Road Bed During Check Dam Placement. The Check Dam Stations Given Are Approximate. The CM Shall Adjust As Necessary To Fit Field Conditions.
3. If In The Opinon Of The CM, The Existing Road Bed (During Scarfying) Is Rock Material And Not Prone To Erosion, The Check Dams May Be Deleted Or Relocatec To More Erosive Sections Of The Existing Road Bed. All Riprap Field Adjustments Are Incidental Obligations Of The Contractor.
4. Check Dam Riprap Quantities Shown Are Approximate. Actual Quantities Shall Be Determined By Field Measurement.
5. Ditches And Backslope Reshaping, Cleaning, And Excavation Shall Be Done In Accordance With The Plans And As Determined By The CM. All Ditch Excavation, Cleaning, And Reshaping Shall Be Considered Incidental To Completion Of The Structure.
6. All Stone For Placed Riprap To Be Class 2 Meeting The Grading Requirements Of Table 705-1, And Section 251 Of The FP-14.

NOTE: Place Downstream Structure Such That Point 'B' Is Approximately Level With The Lowest Ground Elevation Of The Upstream Structure.

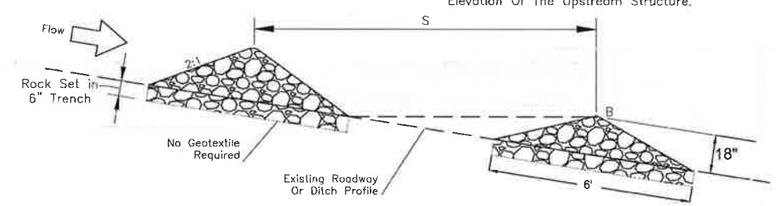

CHECK DAM SPACING GUIDELINES

S = 130'

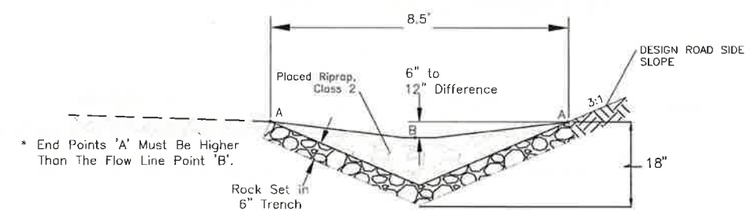

CROSS SECTION DETAILS FOR V DITCH

*If required to maintain the 6" minimum height of the top edge of the check dam (at back slopes) above the check dam flow line, the Contractor shall place embankment material as directed by the CM. This work shall be incidental to the riprap bid items and no additional payment will be made.

DEREK D. MEIER NEW MEXICO 14504 LICENSED PROFESSIONAL ENGINEER 9/8/20

NAVAJO DIVISION OF TRANSPORTATION		
TURNOUT AND MISCELLANEOUS DETAILS		
Designed by: MKC	Date: 7/19	NAVAJO D.O.T
Drawn by: ELO	Date: 7/19	
Checked by: DDM	Date: 7/19	
File Name: 1709010_TYP_SEC_.DWG		

M:\TRN\17-100-090-10\2_DISCIPLINES_SHEETS\2_SHEETS - CIVIL\1709010_TYP_SEC_.DWG 9/16/2020 4:57 PM

REGION	STATE	RESERVATION	ROUTE	PROJECT NO.	SHEET	TOTAL SHEETS
NORTH	NEW MEXICO	NAVAJO	N5012	N5012(1)1,2&4	9	75

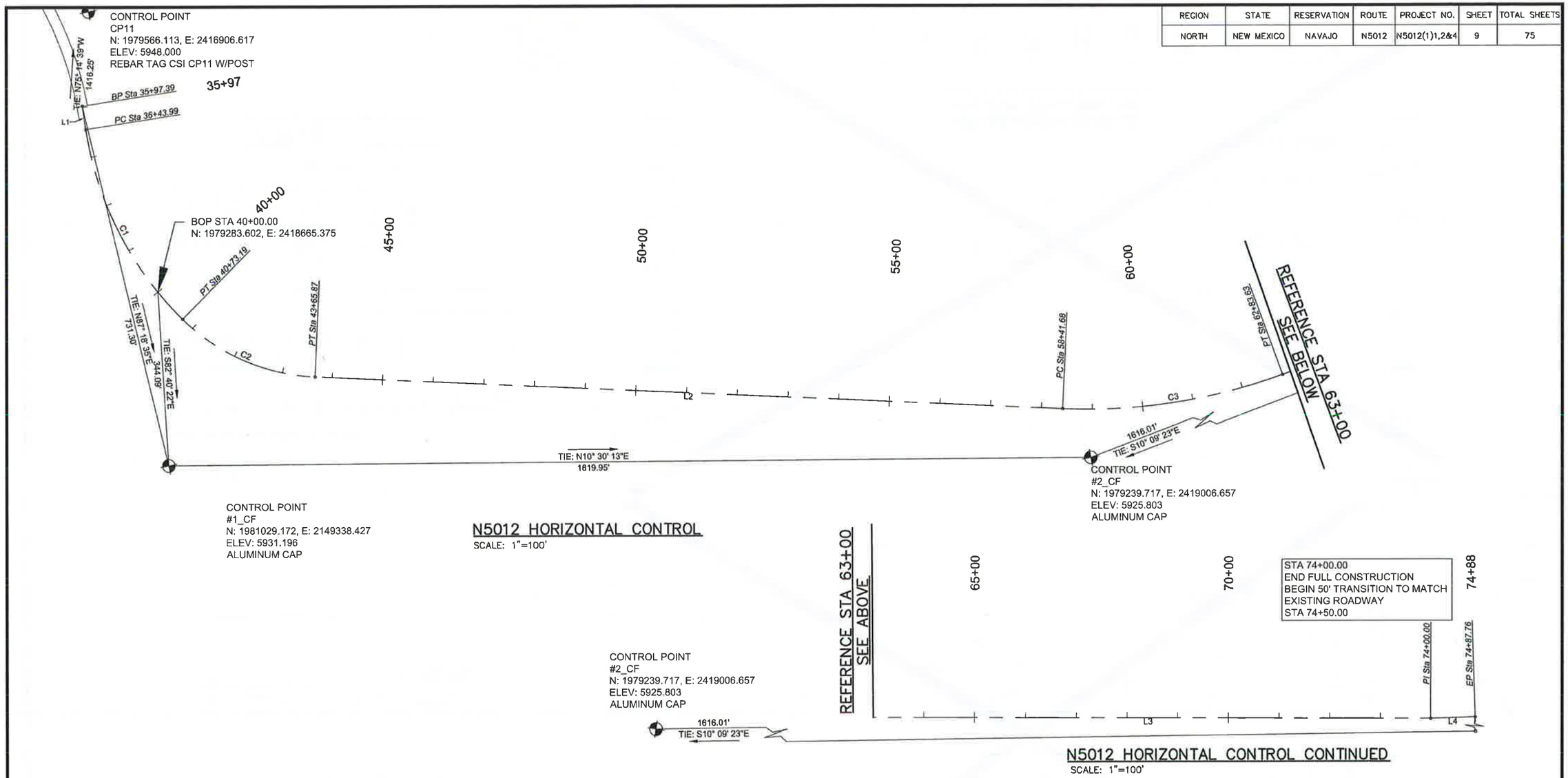

N5012 HORIZONTAL CONTROL

SCALE: 1"=100'

N5012 HORIZONTAL CONTROL CONTINUED

SCALE: 1"=100'

ROUTE N5012 CENTERLINE ALIGNMENT DATA TABLE

NUMBER	PC STATION	PT STATION	DELTA	RADIUS	TANGENT	LENGTH	LINE/CHORD DIRECTION	START POINT	END POINT
L1						46.61'	S87° 54' 23"E	N:1979205.39, E:2418276.16	N:1979203.69, E:2418322.74
C1	36+43.99	40+73.19	036°42'12"	670.00'	222.25'	429.20'	N73° 44' 31"E	N:1979203.69, E:2418322.74	N:1979321.80, E:2418727.77
C2	40+73.19	43+65.87	041°55'21"	400.00'	153.23'	292.67'	N34° 25' 44"E	N:1979321.80, E:2418727.77	N:1979557.86, E:2418889.57
L2						1475.81'	N13° 28' 04"E	N:1979557.86, E:2418889.57	N:1980993.09, E:2419233.29
C3	58+41.68	62+83.63	022°41'41"	1115.77'	223.91'	441.95'	N02° 07' 14"E	N:1980993.09, E:2419233.29	N:1981431.85, E:2419249.53
L3						1116.38'	N09° 13' 37"W	N:1981431.85, E:2419249.53	N:1982533.79, E:2419070.53
L4						87.75'	N11° 12' 45"W	N:1982533.79, E:2419070.53	N:1982619.86, E:2419053.46

NM STATE PLANE WEST ZONE (SCALED TO THE GROUND)
SURVEY FEET, NAD 83, NAVD 88, GEOID 12B
CCFG (COMBINED GRID TO GROUND FACTOR) = 1.0002588669
SCALED TO GROUND AROUND (0,0)

CONTROL POINT
#1_CF
N: 1981029.172, E: 2149338.427
ELEV: 5931.196
ALUMINUM CAP

CONTROL POINT
#2_CF
N: 1979239.717, E: 2419006.657
ELEV: 5925.803
ALUMINUM CAP

CONTROL POINT
CP11
N: 1979566.113, E: 2416906.617
ELEV: 5948.000
REBAR TAG CSI CP11 W/POST

DEREK D. MEIER
NEW MEXICO
14504
LICENSED PROFESSIONAL ENGINEER
1/31/20

NAVAJO DIVISION OF TRANSPORTATION

HORIZONTAL CONTROL

Designed by: MKC	Date: 7/19		
Drawn by: LLD	Date: 7/19		
Checked by: DDM	Date: 7/19		
File Name: N5012(1)1,2&4			

NAVAJO D.O.T

M:\TRN\17-100-090-10\2_DISCIPLINES_SHEETS\2_SHEETS - CIVIL\HORIZONTAL CONTROL SHT.DWG 1/30/2020
4:53 PM

REGION	STATE	RESERVATION	ROUTE	PROJECT NO.	SHEET	TOTAL SHEETS
NORTH	NEW MEXICO	NAVAJO	N5012	N5012(1)1,2&4	10	75

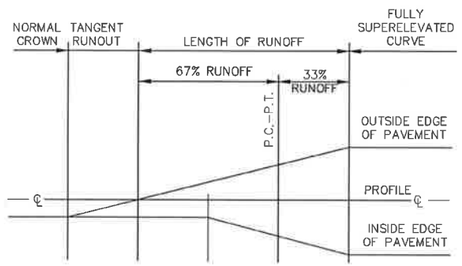

SUPERELEVATION DIAGRAM

Method A e_{MAX} = 6.0%

CURVE C1	STATION	% LEFT	% RIGHT	REMARKS
MATCH EXISTING ROADWAY CROSS SLOPE BEGIN TRANSITION TO FULL SE CURVE C2	40+00.00	−5%	+5%	35 mph

CURVE TWO IS A PCC CURVE TO THE LEFT.

CURVE C2	STATION	% LEFT	% RIGHT	REMARKS
PC STA	40+73.19			CURVE TO LEFT
PRC STA	43.65.87			
e–MAX.	6.0%			35 mph
END SE TRANSITION FROM CURVE C1 BEGIN FULL SE	41+11.86	−6%	+6%	
END FULL SUPER ELEV:	43+27.20	−6%	−6%	
END SE RUNOFF	44+43.20	−2%	−0%	
END TAN. RUNOUT	44+81.87	−2%	−2%	

CURVE C3	STATION	% LEFT	% RIGHT	REMARKS
PC STA	58+41.68			CURVE TO LEFT
PT STA	62+83.63			
e–MAX.	6.0%			45 mph
BEGIN TAN. RUNOUT	57+01.07	−2%	−2%	
BEGIN SE RUNOFF	57+49.00	−2%	−0%	
BEGIN FULL SUPER ELEV:	58+88.00	−5.8%	+5.8%	
END FULL SUPER ELEV:	62+37.30	−5.8%	+5.8%	
END SE RUNOFF	63+76.30	−2%	−0%	
END TAN. RUNOUT	64+24.23	−2%	−2%	

SUPER ELEVATION GRADE TABULATIONS

DESIGN SPEED: 35 mph and 50 mph
NORMAL CROWN SLOPE: −2.0%
MAX. SUPER ELEVATION 6%
PIVOT ABOUT THE CENTERLINE CROWN OF ROADWAY

DEREK D. MEIER
NEW MEXICO
14504
LICENSED PROFESSIONAL ENGINEER
9/8/20

FOR INFORMATION ONLY
NOT FOR CONSTRUCTION

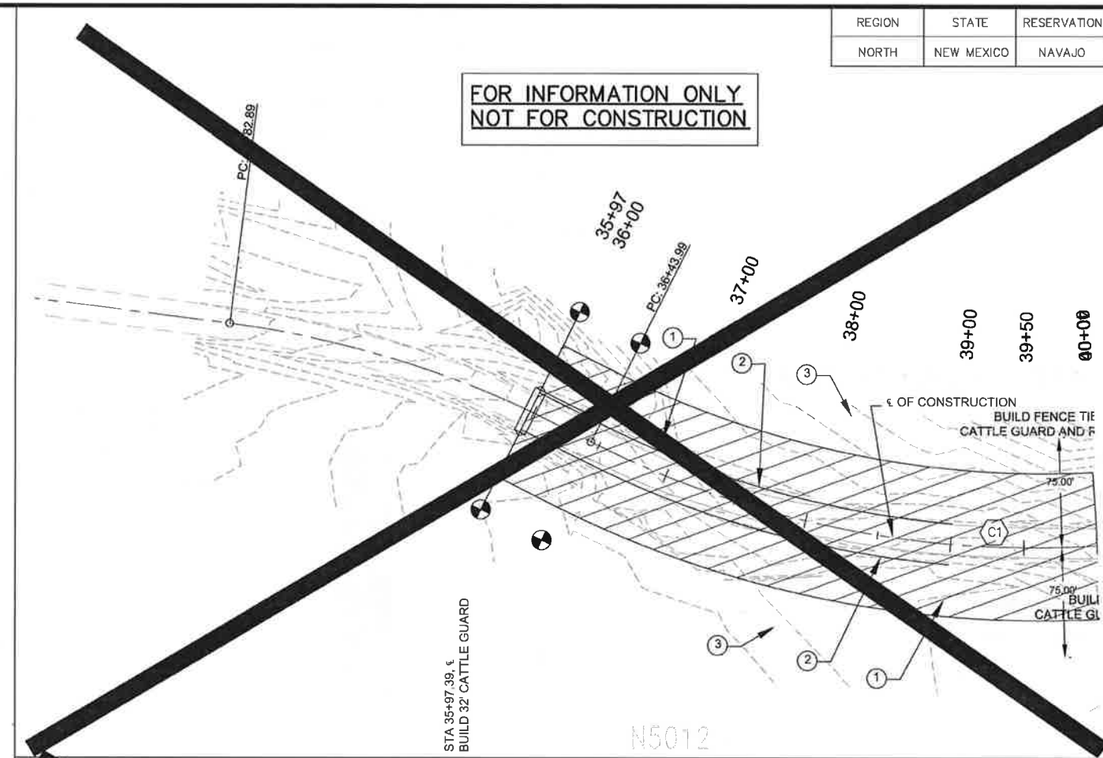

C1 ℄ CURVE DATA
△ = 36°42'12"
R = 670.00'
L = 429.20'
T = 222.25'
SE = 6.0%
SEE SHEET 10 FOR SE INFORMATION

KEYED NOTES
1. SLOPE LIMITS
2. EDGE OF ROADWAY
3. ROW LINE

PLAN VIEW: SCALE=1"=50'

PROFILE VIEW: SCALE HORZ: 1"=50' VERT: 1"=10'

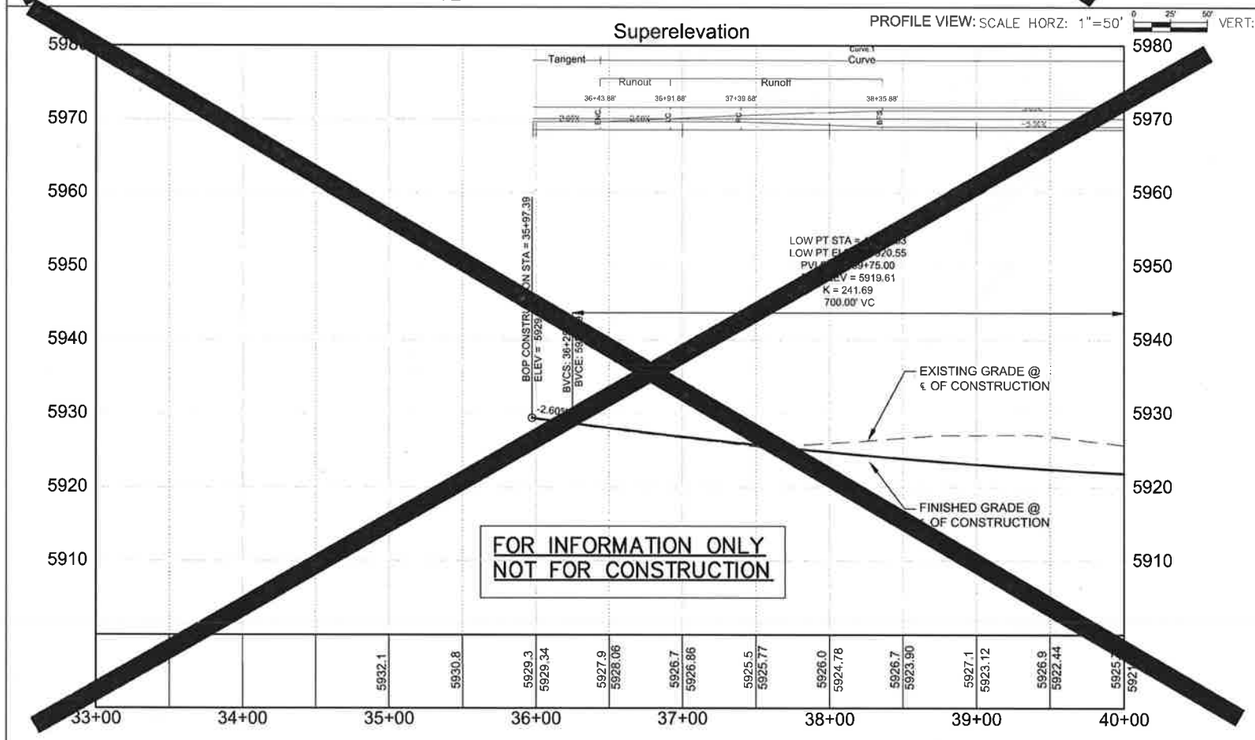

FOR INFORMATION ONLY
NOT FOR CONSTRUCTION

M:\TRN\17-100-090-10\2_DISCIPLINES_SHEETS\3_SHEETS – ROADWAY\PNP BASE.DWG 9/16/2020 5:21 PM

REGION	STATE	RESERVATION	ROUTE	PROJECT NO.	SHEET	TOTAL SHEETS
NORTH	NEW MEXICO	NAVAJO	N5012	N5012(1)1,2&4	11	75

N5012
BOP STA. 40+00.00
BEGIN CONSTRUCTION
MATCH EXISTING ROADWAY AND TRANSITION TO FULL CONSTRUCTION AT STA 40+73.19

℄ CURVE DATA
Δ = 41°55'21"
R = 400.00'
L = 292.67'
T = 153.23'
SE = 6.0%
SEE SHEET 10 FOR SE INFORMATION

HAND INSTALLATION OF SAFETY FENCE PRIOR TO CONSTRUCTION:
STA 50+00.00, OFF 75' LT TO STA 50+25.00, OFF 75' LT
STA 50+25.00, OFF 75' LT TO STA 50+25.00, OFF 45' LT
STA 50+25.00, OFF 45' LT TO STA 52+75.00, OFF 45' LT
STA 52+75.00, OFF 45' LT TO STA 52+75.00, OFF 75' LT
STA 52+75.00, OFF 75' LT TO STA 53+00.00, OFF 75' LT
HAND INSTALLATION OF ROW FENCE FROM STA 50+00 TO STA 53+00

CULTURALLY SENSITIVE AREA, SITE NM-H-34-70 SEE ENVIRONMENTAL MITIGATIONS SHT. 3

BUILD FENCE TIE TO CATTLE GUARD AND ROW
STA:41+11.18 75.00'RT FENCE TIE TO ROW
BUILD FENCE, TIE TO ROW AND BRIDGE CORNER
BUILD FENCE, TIE TO GATE AND BRIDGE CORNER
℄ OF CONSTRUCTION
MATCHLINE STA. 54+00.00 SEE SHEET 12

STA 40+73.19 ℄ BUILD 32' CATTLE GUARD
STA 42+00.00 TO STA 44+88.00 33' LT TO 61' LT BUILD 6' DEEP CLASS-A RIP RAP EROSION CONTROL PAD
STA STA 44+88.00 TO STA 44+91.50 AND STA 44+99.22 TO STA 45+10.00 21' LT TO 59' LT BUILD 6' DEEP CLASS-A RIP RAP EROSION CONTROL PAD
STA 43+82.19 RT BUILD 16' TYPE I GATE
MB-03 STA 43+79.60 - RT TO STA 45+07.55 - RT BUILD GUARDRAIL SYSTEM INCLUDES: END TERMINAL SYSTEM STD. W-BEAM GUARDRAIL & THRIE BEAM GUARDRAIL TRANSITION
STA 43+62.32-58.75' LT AND STA 44+87.00-54.81' LT BUILD CHECK DAM SEE SHEET 8 FOR DETAILS
STA 44+40.50 EXIST. 84" x 65' CMP TO BE REMOVED
STA 43+58.81-59.08' LT TO STA 45+10.00-55.75' LT REALIGN DITCH TO DRAIN
STA 45+21.80 TO STA 46+25.30 BRIDGE 204 BUILD 103'-6" LONG BY 31'-0" WIDE SINGLE SPAN BRIDGE SEE BRIDGE SHEETS
STA 45+09.99-53.63' LT TO STA 45+28.22-55.22' LT BUILD 18.9'L9-25'W RIP RAP CONTROL PAD
STA 46+33.30 EXIST. 96" x 72' CMP TO BE REMOVED
MB-03 STA 44+42.55 - LT TO STA 45+07.55 - LT BUILD GUARDRAIL SYSTEM INCLUDES: END TERMINAL SYSTEM & THRIE BEAM GUARDRAIL TRANSITION
MB-04 STA 46+39.55 -RT TO STA 47+04.55 RT. BUILD GUARDRAIL SYSTEM INCLUDES: END TERMINAL SYSTEM & THRIE BEAM GUARDRAIL TRANSITION
MB-02 STA 46+39.55 - LT TO STA 47+67.50 - LT BUILD GUARDRAIL SYSTEM INCLUDES: END TERMINAL SYSTEM STD. W-BEAM GUARDRAIL & THRIE BEAM GUARDRAIL TRANSITION
DS-01 STA 47+60.57 BUILD 36" CSPC BUILD METAL END SECTIONS LT & RT SEE SHT. 37
STA 49+58.81 LT BUILD GATE, BARB WIRE, 5-STRAND
TO-1 STA 49+97.47 BUILD 16' TURNOUT LT. BUILD 16' CATTLE GUARD LT R = 30' LT & RT SEE SHT. 14
TDS-01 STA 49+97.47-42' LT BUILD 36" CSPC BUILD METAL END SECTIONS LT & RT SEE SHT. 39
RD-9276

N5012

DEREK D. MEIER NEW MEXICO 14504 LICENSED PROFESSIONAL ENGINEER 7/8/20

KEYED NOTES
1. SLOPE LIMITS
2. EDGE OF ROADWAY
3. ROW LINE/FENCE

PLAN VIEW: SCALE=1"=50'

Superelevation

PROFILE VIEW: SCALE HORZ: 1"=50' VERT: 1"=10'

LOW PT STA = 41+50.00
LOW PT ELEV = 5920.77
PVI STA = 40+96.50
PVI ELEV = 5921.78
K = 49.98
107.00' VC

LOW PT STA = 42+52.53
LOW PT ELEV = 5920.55
PVI STA = 39+75.00
PVI ELEV = 5919.61
K = 241.69
700.00' VC

THIS VC IS A PARTIAL CURVE REMAINING FROM THE PREVIOUS ONE STARTING AT STA 36+25.00 ON SHEET 10.

LOW PT STA = 47+68.80
LOW PT ELEV = 5921.99
PVI STA = 49+33.80
PVI ELEV = 5922.48
K = 379.47
330.00' VC

HIGH PT STA = 56+10.00
HIGH PT ELEV = 5929.78
PVI STA = 54+45.00
PVI ELEV = 5928.46
K = 893.16
330.00' VC

BVCS: 40+43.00 BVCE: 5923.94
EVCS: 41+50.00 EVCE: 5920.77
EVCS: 43+25.00 EVCE: 5920.66
BVCS: 47+68.80 BVCE: 5921.99
EVCS: 50+98.80 EVCE: 5924.41
BVCS: 52+80.00 BVCE: 5926.53

-4.04% -1.93% 0.30% 1.17%
FINISHED GRADE @ ℄ OF CONSTRUCTION
EXISTING GRADE @ ℄ OF CONSTRUCTION
S= -0.80%
132.00'
STA 40+73.19' END PAVEMENT TRANSITION BUILD CATTLE GUARD BEGIN FULL CONSTRUCTION ELEV: 5922.81
VERTICAL PROFILE TRANSITION FROM EXISTING GROUND
STA 43+58.81-59.08' LT BEGIN DITCH MATCH EXIST. INV: 5907.40
STA 44+40.50 EXIST. 84" x 65' CMP TO BE REMOVED
STA 45+10.00-55.75' LT END DITCH MATCH EXIST. INV: 5906.19
DRAINAGE DITCH LEFT PROFILE
DS-01 36" CSPC INV: 5911.01
STA 46+33.30 EXIST. 96" x 72' CMP TO BE REMOVED

5960 5950 5940 5930 5920 5910 5900 5890

40+00 41+00 42+00 43+00 44+00 45+00 46+00 47+00 48+00 49+00 50+00 51+00 52+00 53+00 54+00

M:\TRN\17-100-090-10\2_DISCIPLINES_SHEETS\3_SHEETS - ROADWAY\PNP BASE.DWG 9/17/2020 8:29 AM

REGION	STATE	RESERVATION	ROUTE	PROJECT NO.	SHEET	TOTAL SHEETS
NORTH	NEW MEXICO	NAVAJO	N5012	N5012(1)1,2&4	12	75

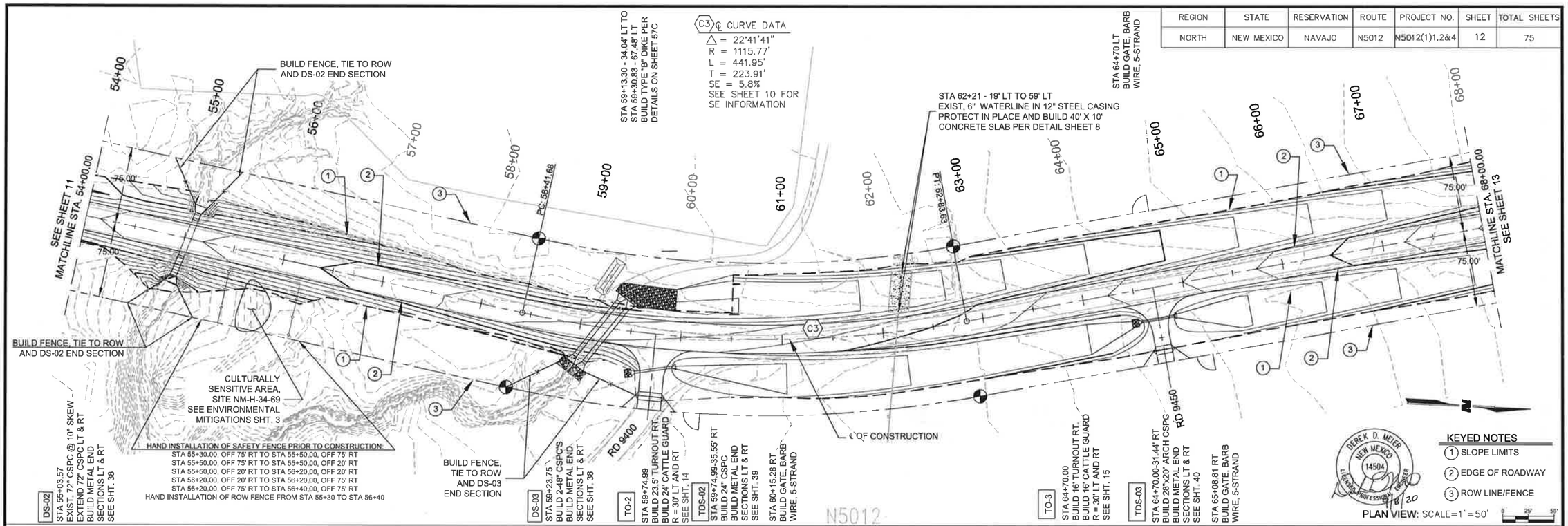

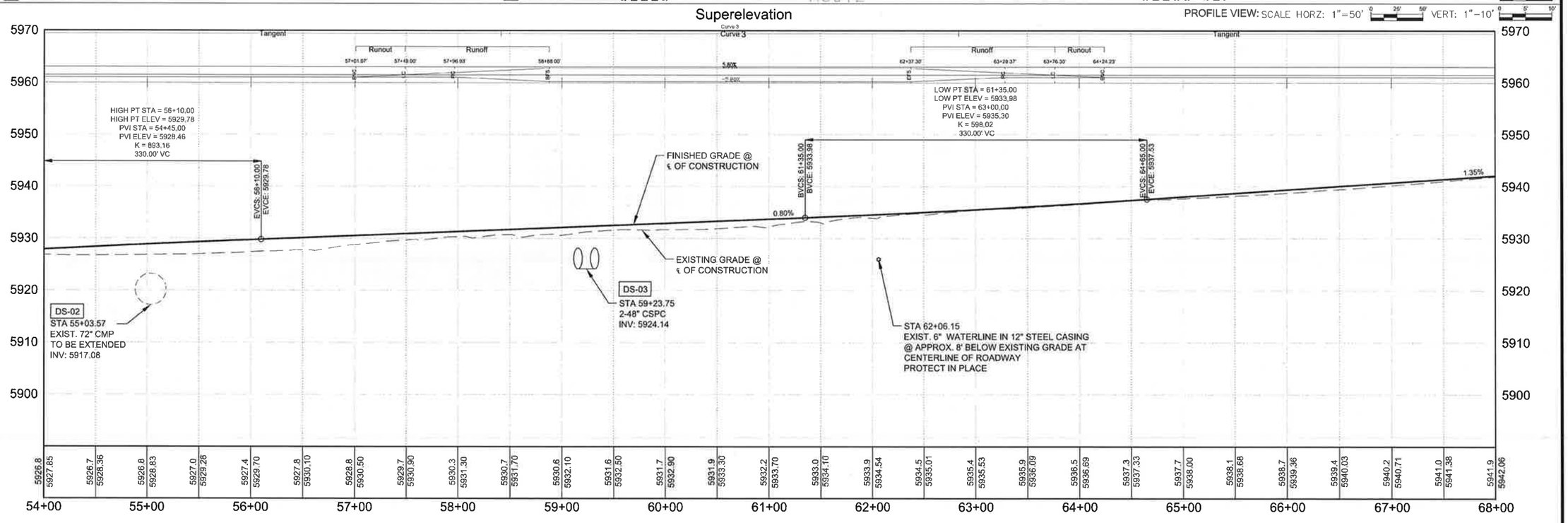

M:\TRN\17-100-090-10\2_DISCIPLINES_SHEETS\3_SHEETS - ROADWAY\PNP BASE.DWG 9/16/2020 5:12 PM

REGION	STATE	RESERVATION	ROUTE	PROJECT NO.	SHEET	TOTAL SHEETS
NORTH	NEW MEXICO	NAVAJO	N5012	N5012(1)1,2&4	13	75

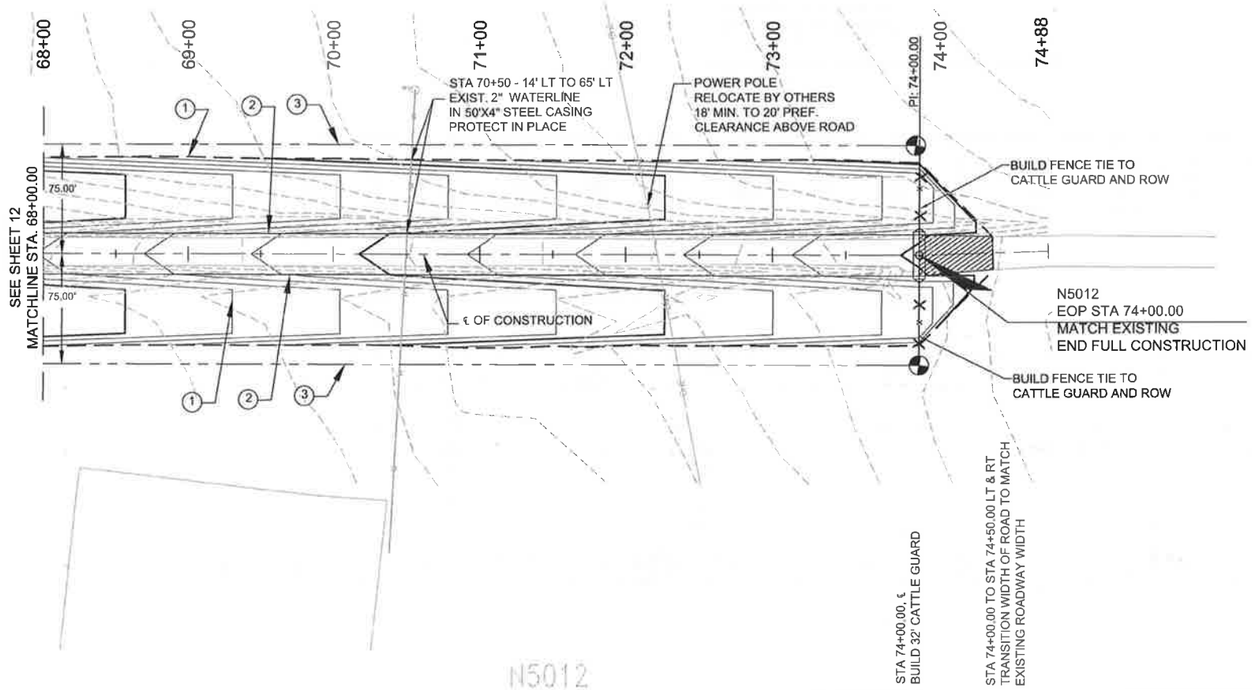

DEREK D. MEICER
NEW MEXICO
14504
LICENSED PROFESSIONAL ENGINEER
9/8/20

KEYED NOTES

1. SLOPE LIMITS
2. EDGE OF ROADWAY
3. ROW LINE/FENCE

PLAN VIEW: SCALE=1"=50' (0, 25', 50')

PROFILE VIEW: SCALE HORZ: 1"=50' (0, 25', 50') VERT: 1"=10' (0, 5', 10')

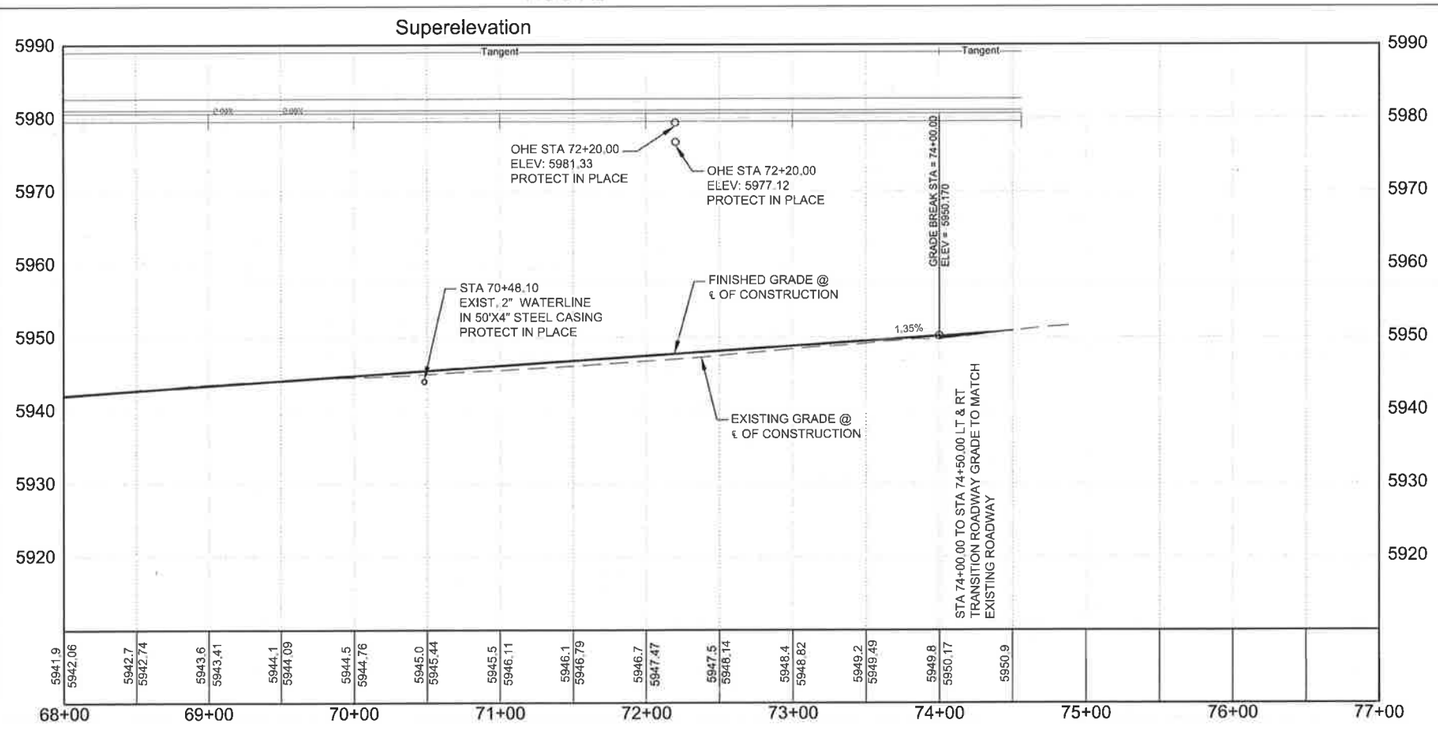

M:\TRN\17-100-090-10\2_DISCIPLINES_SHEETS\3_SHEETS - ROADWAY\PNP BASE.DWG 9/16/2020 5:17 PM

REGION	STATE	RESERVATION	ROUTE	PROJECT NO.	SHEET	TOTAL SHEETS
NORTH	NEW MEXICO	NAVAJO	N5012	N5012(1)1,2&4	14	75

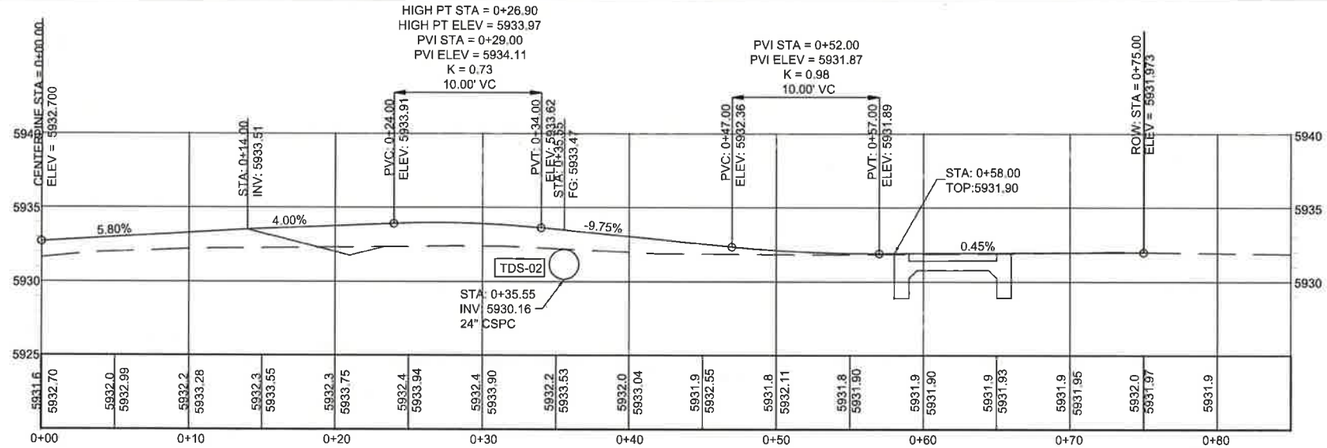

TO-2 STA 59+74.99 - RT
BUILD 23.50' WIDE TURNOUT RT. NORMAL IN PLACE;
PAVE TO 58.00' RT.;
BUILD CATTLE GUARD RT.;
BASE COURSE TO ROW;
BUILD TDS-02 RT., SEE SHEET 39 FOR STRUCTURE SECTION.
RADIUS = 30' LT AND RT.

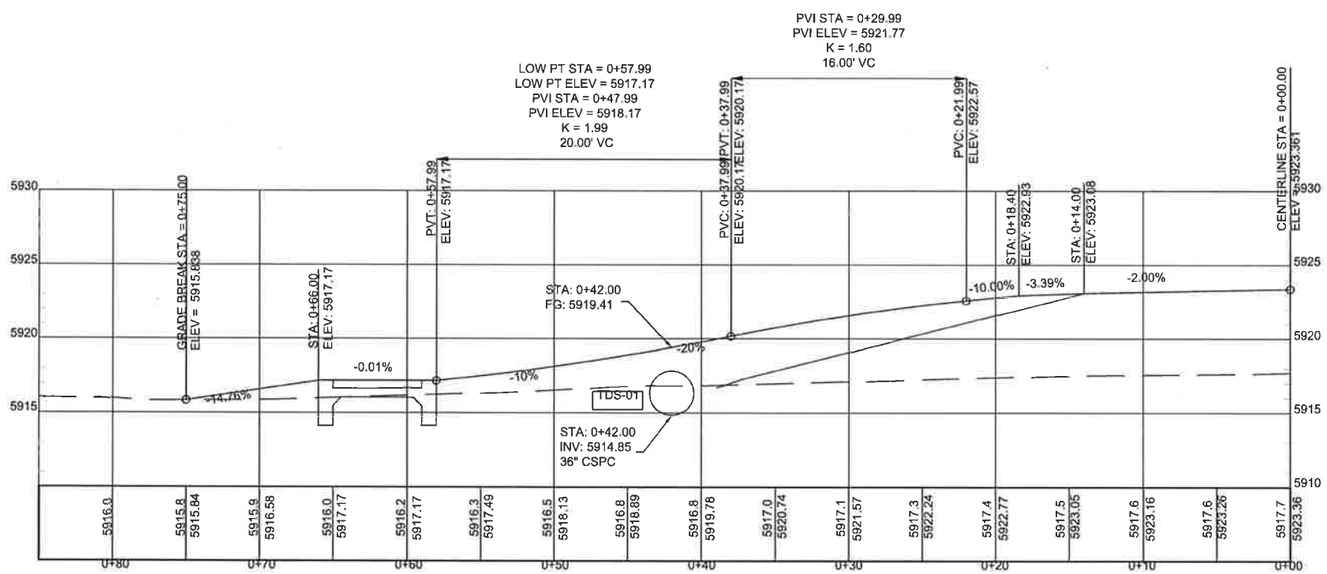

TO-1 STA 49+97.47 - LT
BUILD 16' WIDE TURNOUT LT. NORMAL IN PLACE;
PAVE TO 58.00' LT.;
BUILD CATTLE GUARD LT.;
BASE COURSE TO ROW;
BUILD TDS-01 LT., SEE SHEET 39 FOR STRUCTURE SECTION.
RADIUS = 30' LT AND RT.

DEREK D. MEIER
NEW MEXICO
14504
Licensed Professional Engineer
1/31/20

NAVAJO DIVISION OF TRANSPORTATION

TURNOUT PLAN AND PROFILE SHEETS

Designed by: ELO	Date: 7/2019
Drawn by: ELO	Date: 7/2019
Checked by: DDM	Date: __/2019
File Name: TURNOUT BASE.DWG	

NAVAJO D.O.T

M:\TRN\17-100-090-10\2_DISCIPLINES_REFERENCES\TURNOUT BASE.DWG 1/30/2020 4:55 PM

REGION	STATE	RESERVATION	ROUTE	PROJECT NO.	SHEET	TOTAL SHEETS
NORTH	NEW MEXICO	NAVAJO	N5012	N5012(1)1,2&4	15	75

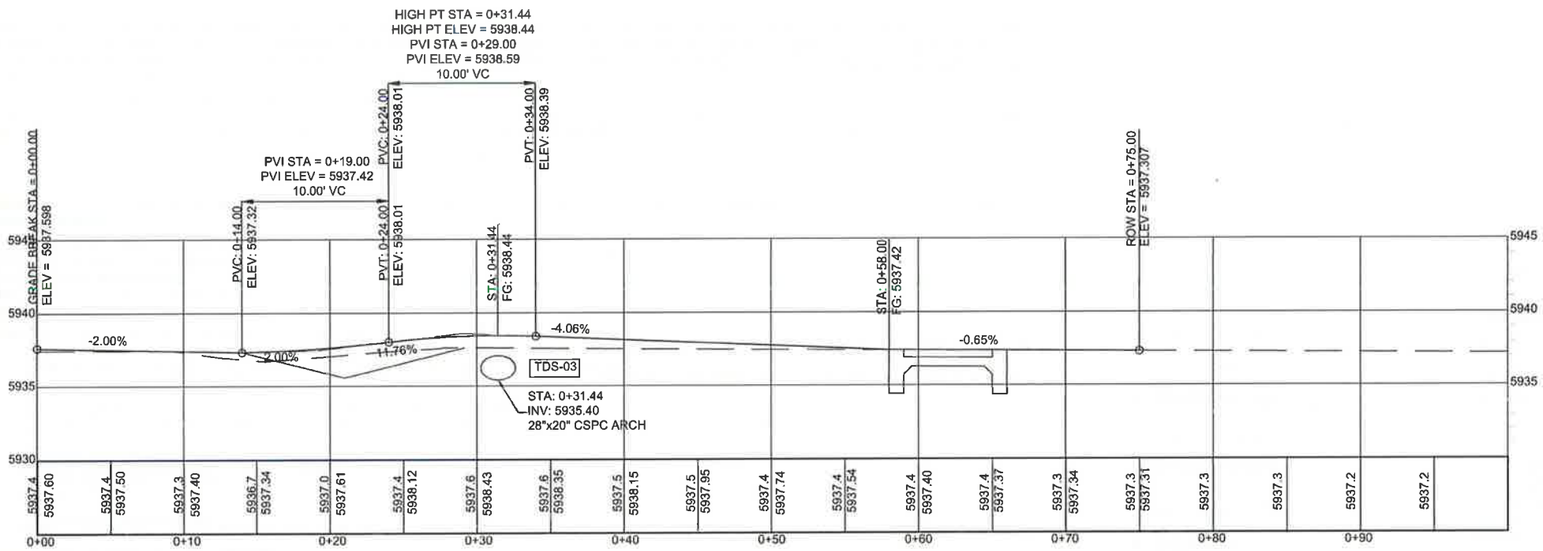

TO-3 STA 64+70.00 - RT
BUILD 16.00' WIDE TURNOUT RT. NORMAL IN PLACE;
PAVE TO 58.00' RT.;
BUILD CATTLE GUARD RT.;
BASE COURSE TO ROW;
BUILD TDS-03 RT., SEE SHEET 40 FOR STRUCTURE SECTION.
RADIUS = 30' LT AND RT.

M:\TRN\17-100-080-10\2_DISCIPLINES_REFERENCES\TURNOUT BASE.DWG 1/30/2020 4:55 PM

DEREK D. MEIER
NEW MEXICO
14504
LICENSED PROFESSIONAL ENGINEER
1/31/20

NAVAJO DIVISION OF TRANSPORTATION

TURNOUT PLAN AND PROFILE SHEETS

Designed by: ELO	Date: 7/2019
Drawn by: ELO	Date: 7/2019
Checked by: DDM	Date: _/2019
File Name: TURNOUT BASE.DWG	

NAVAJO D.O.T

REGION	STATE	RESERVATION	ROUTE	PROJECT NO.	SHEET	TOTAL SHEETS
NORTH	NEW MEXICO	NAVAJO	N5012	N5012(1)1,2&4		75

GENERAL NOTES:

1. SPECIFICATIONS: WORKMANSHIP AND MATERIALS SHALL CONFORM TO STANDARD SPECIFICATIONS FOR CONSTRUCTION OF ROADS AND BRIDGES ON FEDERAL HIGHWAY PROJECTS, FP-14 U.S. CUSTOMARY UNITS AND APPLICABLE SUPPLEMENTAL SPECIFICATIONS AND NEW MEXICO DEPARTMENT OF TRANSPORTATION'S 2019 SPECIFICATIONS AND SPECIAL PROVISIONS.

2. CONCRETE: SUPERSTRUCTURE CONCRETE SHALL BE CLASS A (AE) WITH A 28 DAY MINIMUM STRENGTH OF 4,500 PSI, AND SUBSTRUCTURE CONCRETE SHALL BE CLASS A WITH A 28 DAY MINIMUM STRENGTH OF 4,500 PSI. CHAMFER ALL EDGES OF CONCRETE 3/4" UNLESS OTHERWISE CURING CONCRETE SHALL BE IN ACCORDANCE WITH SUBSECTION 552.15 OF FP-14 U.S. CUSTOMARY UNITS. A WAX-BASED CURING COMPOUND SHALL NOT BE USED FOR CURING THE CONCRETE DECK. FINISHING FORMED CONCRETE SURFACES SHALL BE IN ACCORDANCE WITH SUBSECTION 552.16 OF FP-14 U.S. CUSTOMARY UNITS.

3. DECK AND APPROACH SLABS: THE SURFACES OF THE BRIDGE DECK, AND APPROACH SLABS SHALL BE MACHINE-GROOVED IN ACCORDANCE WITH SUBSECTION 552.14 OF FP-14 U.S. CUSTOMARY UNITS FOR GROOVING HARDENED CONCRETE. DECK SLAB CONCRETE SHALL BE PLACED AND MACHINE FINISHED FULL WIDTH OF THE DECK SLAB IN ONE CONTINUOUS OPERATION OVER THE SPAN. FORWARD RATE OF PROGRESS OF CONCRETE PLACEMENT SHALL NOT BE LESS THAN 30 FEET PER HOUR. SET RETARDANT SHALL NOT BE USED IF THE ATMOSPHERIC TEMPERATURE IS LESS THAN 60° F. THIS ITEM WILL BE INCIDENTAL TO WORK.

4. REINFORCING BARS AND EPOXY COATED BARS: SHALL BE GRADE 60 UNLESS A DIFFERENT GRADE IS SPECIFIED ELSEWHERE IN THE PLANS. DIMENSIONS SHOWN REFER TO THE CENTERLINES OF BARS UNLESS NOTED OTHERWISE. ALL REINFORCING SHALL BE STORED ABOVE GROUND ON PLATFORM SKIDS OR OTHER SUPPORTS. REINFORCING SHALL BE KEPT FREE FROM DIRT, GREASE, AND OTHER FOREIGN MATTER. REINFORCING SHALL BE KEPT FREE OF CORROSION AS FAR AS PRACTICABLE. REFER TO SUBSECTIONS 554.06, 554.07 AND 709.01 OF FP-14 U.S. CUSTOMARY UNITS.

5. STAY-IN-PLACE DECK FORM: VENTILATED STEEL DECK FORMS SHALL BE UTILIZED FOR SLAB CONSTRUCTION ON THIS STRUCTURE. A MINIMUM OF 0.9 SQ. IN. HOLES PER 1 SQ. FT. OF DECK FORM AREA SHALL BE PROVIDED. COMPLETE SHOP PLANS, DESIGN CALCULATIONS, AND SPECIFICATIONS FOR THE PROPOSED FORMING SYSTEM MUST BE APPROVED BY THE CONSTRUCTION MANAGER PRIOR TO INSTALLATION.

6. BRIDGE NUMBER PLATES: THE CONTRACTOR SHALL FURNISH AND INSTALL TWO BRIDGE NUMBER PLATES CONFORMING TO THE DETAILS SHOWN ON SHEET 17. THE COST OF THE PLATES SHALL BE CONSIDERED INCIDENTAL TO CONSTRUCTION AND WILL NOT BE PAID FOR DIRECTLY.

7. JOINT FILLER: EXTRUDED POLYSTYRENE FOAM MATERIAL SHALL BE OWENS CORNING FORMULARY 250 OR AN APPROVED EQUAL. FURNISHING AND PLACING THE MATERIAL WILL BE INCIDENTAL TO THE BID ITEM "STRUCTURAL CONCRETE, CLASS A (AE)."

8. VERIFICATION OF GIRDER CAMBER: BEFORE SCREEDS ARE SET, THE CONTRACTOR SHALL SURVEY AND PLOT GIRDER PROFILES OF EACH COMPLETE LINE OF GIRDERS TO DETERMINE GIRDER CAMBER ELEVATIONS. THIS WORK SHALL BE INCLUDED IN THE BID ITEM "CONSTRUCTION STAKING BY CONTRACTOR". THE CONSTRUCTION MANAGER AND ENGINEER OF RECORD SHALL USE THIS INFORMATION TO VERIFY CAMBER AND FINISH DECK ELEVATIONS. IF THE ACTUAL CAMBER DIFFERS FROM FROM THAT SHOWN ON THE PLANS SUCH THAT A DEFICIENT SLAB THICKNESS WOULD RESULT, THE CONTRACTOR WILL BE REQUIRED TO SUBMIT A CORRECTIVE ACTION PLAN WITH FINAL ADJUSTMENTS BEING APPROVED BY THE ENGINEER OF RECORD AND THE CONSTRUCTION MANAGER.

9. PERMANENT ANTI-GRAFFITI PROTECTIVE COATING: SHALL BE APPLIED TO THE FOLLOWING SURFACES:

   a. BRIDGE BARRIER RAILING.
   b. THE FIRST 15'-0" OF EXTERIOR EDGES OF DECK SLAB CANTILEVER.
   c. THE FIRST 15'-0" OF THE EXTERIOR SURFACES OF EXTERIOR GIRDERS.
   d. THE EXPOSED EXTERIOR SURFACES OF ABUTMENTS AND WINGWALLS.

10. THE CONTRACTOR SHALL VERIFY IN THE FIELD ALL DIMENSIONS, ELEVATIONS, AND DETAILS WHICH WILL BE INVOLVED IN THE NEW CONSTRUCTION BEFORE PROCEEDING WITH NEW WORK. ANY DISCREPANCIES FOUND SHALL BE REPORTED TO THE CONSTRUCTION MANAGER IMMEDIATELY.

11. PENETRATING WATER REPELLENT TREATMENT: SATURATE THE EXPOSED SURFACES OF THE FOLLOWING CONCRETE STRUCTURES WITH A PENETRATING WATER REPELLENT TREATMENT IN ACCORDANCE WITH SECTION 532 "PENETRATING WATER REPELLENT TREATMENT" OF THE NEW MEXICO DEPARTMENT OF TRANSPORTATION'S 2019 SPECIFICATIONS AND SPECIAL PROVISIONS. PENETRATING WATER REPELLENT SHALL BE COMPATIBLE WITH PERMANENT ANTI-GRAFFITI PROTECTIVE COATING. ALL LABOR AND MATERIALS WILL BE INCIDENTAL TO THE BID ITEMS "STRUCTURAL CONCRETE, CLASS A (AE)" AND "STRUCTURAL CONCRETE, CLASS A".

12.
   1. BRIDGE WINGWALLS
   2. FRONT AND SIDE FACES OF ABUTMENT BRIDGE SEATS
   3. FRONT FACES OF ABUTMENT BACKWALLS
   4. TOP SURFACES OF BRIDGE SEATS ON ABUTMENTS
   5. TOP AND VERTICAL SIDE SURFACES OF BRIDGE DECKS
   6. TOP SURFACES OF CONCRETE APPROACH SLABS
   7. CONCRETE BARRIER RAILINGS
   8. EXTEND TREATMENT 1'-0" BELOW FINISHED GRADE, WHERE APPLICABLE. DO NOT TREAT THE UNDERSIDE OF PIER CAPS, SIDES AND END SURFACES OF CONCRETE APPROACH SLABS.

13. STRUCTURAL STEEL: SHALL CONFORM TO THE REQUIREMENTS OF AASHTO M270 UNLESS NOTED OTHERWISE IN THE PLANS.

14. TYPE IV BEAMS: CONCRETE BEAM SUPPLIER/FABRICATOR SHALL NOTIFY THE CONSTRUCTION MANAGER AND ENGINEER OF RECORD WHEN THE TYPE IV BEAMS ARE BEING FABRICATED TO ALLOW THEIR REPRESENTATIVES TO INSPECT THE STEEL. SEE SUPPLEMENTAL BEAM NOTES ON SHEET 26. DELIVERY ROUTE SHALL BE ALONG ROUTE N5005 AND SHALL BE SUBMITTED TO THE CONSTRUCTION MANAGER FOR NDOT PRIOR APPROVAL.

15. TEMPORARY WORKS: THIS WORK CONSISTS OF THE DESIGN, CONSTRUCTION, INSPECTION AND REMOVAL OF TEMPORARY WORKS FOR THE CONSTRUCTION AND REPAIR OF PERMANENT STRUCTURES IN ACCORDANCE WITH SECTION 562 OF FP-14 U.S. CUSTOMARY UNITS. TEMPORARY WORKS INCLUDES ALL TEMPORARY FACILITIES USED IN CONSTRUCTION THAT DO NOT BECOME PART OF THE PERMANENT STRUCTURE. SUCH TEMPORARY WORKS INCLUDE, BUT ARE NOT LIMITED TO, FALSEWORK, FORMWORK, COFFERDAMS, AND EXCAVATION SUPPORTS. TEMPORARY WORKS SHALL NOT BE PAID FOR DIRECTLY BUT SHALL BE CONSIDERED INCIDENTAL TO THE ITEMS OF WORK FOR WHICH PAYMENT IS MADE.

SCOPE OF WORK:

BUILD A NEW SINGLE-SPAN BRIDGE CONSISTING OF DRILLED SHAFTS, REINFORCED CONCRETE ABUTMENTS, PRESTRESSED CONCRETE BEAMS AND CONCRETE DECK.

INCIDENTAL ITEMS:

1. BRIDGE NUMBER PLATES.
2. GALVANIZED SHEET METAL AT APPROACH SLAB AND SLEEPER FOOTER.
3. PREFORMED BITUMINOUS EXPANSION JOINT FILLER.
4. ELASTOMERIC BEARING PADS.
5. DECK AND APPROACH SLAB SURFACE TEXTURING AND MACHINE GROOVING.
6. ABUTMENT WATERSTOP AND APPURTENANCES.
7. ABUTMENT WATERPROOFING SYSTEM.
8. ALL PREFORMED CLOSED CELL FOAM BRIDGE JOINT SEALS.
9. ALL EXTRUDED POLYSTYRENE FOAM.
10. CLASS 2 GEOTEXTILE SEPARATOR FABRIC
11. PENETRATING WATER REPELLENT TREATMENT.
12. PERMANENT ANTI-GRAFFITI PROTECTIVE COATING.

ITEMS LISTED ABOVE ARE ONLY A GENERAL DESCRIPTION OF THE REQUIRED WORK AND MATERIAL AND MAY NOT BE COMPLETE. SUBSECTION 103.01 OF FP-14 U.S. CUSTOMARY UNITS APPLIES. THIS LIST DOES NOT INCLUDE ANY INCIDENTAL WORK REQUIRED BY SUPPLEMENTAL SPECIFICATIONS, STANDARD SERIALS, SPECIAL PROVISIONS, OR THE STANDARD SPECIFICATIONS.

INDEX OF SHEETS:

16 - BRIDGE GENERAL NOTES
17 - BRIDGE ESTIMATED QUANTITIES
18 - BRIDGE PLAN
19 - BRIDGE PROFILE
20 - TRANSVERSE SECTION
21 - FOUNDATION PLAN
22 - DRILLED SHAFT DETAILS
23 - ABUTMENT DETAILS
24 - WINGWALL DETAILS
25 - BEARING DETAILS
26 - PRESTRESSED CONCRETE BEAM DETAILS
27 - INTERMEDIATE DIAPHRAGM DETAILS
28 - DIAPHRAGM DETAILS
29 - DECK SLAB PLAN
30 - TOP OF SLAB ELEVATIONS
31 - APPROACH SLAB DETAILS
32 - REBAR SCHEDULE

DESIGN DATA:

DESIGN IS IN ACCORDANCE WITH AASHTO LRFD BRIDGE DESIGN SPECIFICATION 8th EDITION AND CURRENT INTERIMS.

DESIGN STRESSES:	
STRUCTURAL STEEL, ASSHTO M-270:	Fy = 36 ksi
REINFORCED CONCRETE:	
-SUPERSTRUCTURE CONCRETE:	f'c = 4500 psi @ 28 DAYS
-SUBSTRUCTURE CONCRETE:	f'c = 4500 psi @ 28 DAYS
-REINFORCING STEEL:	Fy = 60 ksi, GRADE 60
LIVE LOAD:	HL-93
WEARING SURFACE:	30 psf ALLOWANCE FOR FUTURE WEARING SURFACE
STAY-IN-PLACE DECK FORMS:	15 psf
WIND GUST:	115 mph
HORIZONTAL EARTH PRESSURE (EQUIV. FLUID PRESSURE)	
ACTIVE PRESSURE:	35 pcf
AT-REST PRESSURE:	55 pcf
PASSIVE PRESSURE:	425 pcf

KELLY R. HEATH
NEW MEXICO
18915
PROFESSIONAL ENGINEER

NAVAJO DIVISION OF TRANSPORTATION

BRIDGE GENERAL NOTES

Designed by: KRH	Date: 10/19	NAVAJO D.O.T
Drawn by: GMG	Date: 10/19	
Checked by: DDM	Date: 10/19	
File Name: GENERAL NOTES_.DWG		

REGION	STATE	RESERVATION	ROUTE	PROJECT NO.	SHEET	TOTAL SHEETS
NORTH	NEW MEXICO	NAVAJO	N5012	N5012(1)1,2&4		75

ESTIMATED QUANTITIES

ITEM NO.	ITEM DESCRIPTION	UNIT	SUPER STRUCTURE	SUBSTRUCTURE ABUTMENT NO.1	SUBSTRUCTURE ABUTMENT NO.2	APPR. SLABS	EMBANKMENT PROTECTION (RUNDOWNS)	TOTAL QUANTITY
20801-0000	STRUCTURE EXCAVATION	CU.YD.		134	154			288
20803-0000	STRUCTURAL BACKFILL	CU.YD.		295	301			596
25101-0100	PLACED RIPRAP, METHOD A, CLASS 1	CU.YD.					37	37
25112-2000	WIRE ENCLOSED RIPRAP, CLASS 2	CU.YD.		159	167		7	333
55201-0100	STRUCTURAL CONCRETE, CLASS A	CU.YD.		17	17			34
55201-0200	STRUCTURAL CONCRETE, CLASS A (AE)	CU.YD.	161			45		206
55302-3300	PRECAST, PRESTRESSED CONCRETE AASHTO GIRDER	LIN.FT.	402					402
55401-1000	REINFORCING STEEL	LBS.		13695	12810			26505
55401-2000	REINFORCING STEEL, EPOXY COATED	LBS.	21280			8580		29860
55502-0000	STRUCTURAL STEEL, FURNISHED, FABRICATED, AND ERECTED	LBS.	2530					2530
55601-0500	BRIDGE RAILING, CONCRETE 42"	LIN.FT.	264					264
55901-0000	MEMBRANE WATERPROOFING	SQ.YD.	396					396
56501-0400	DRILLED SHAFT, 36-INCH DIAMETER	LIN.FT.		220	200			420
56505-0000	CROSSHOLE SONIC LOGGING	EACH		4	4			8
60101-0000	CONCRETE	CU.YD.					13	13

BRIDGE NUMBER PLATE DETAILS

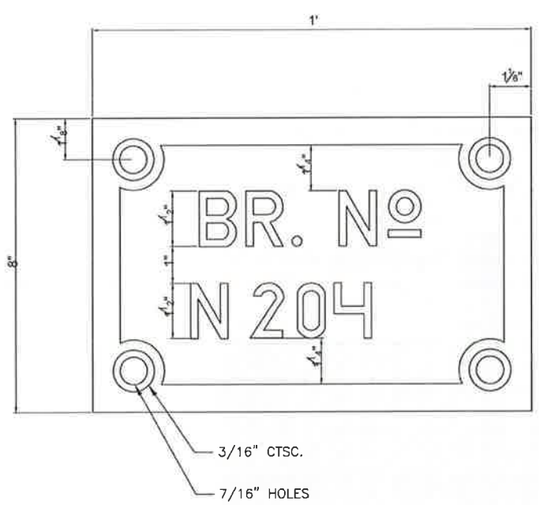

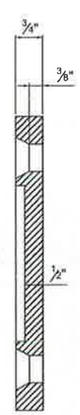

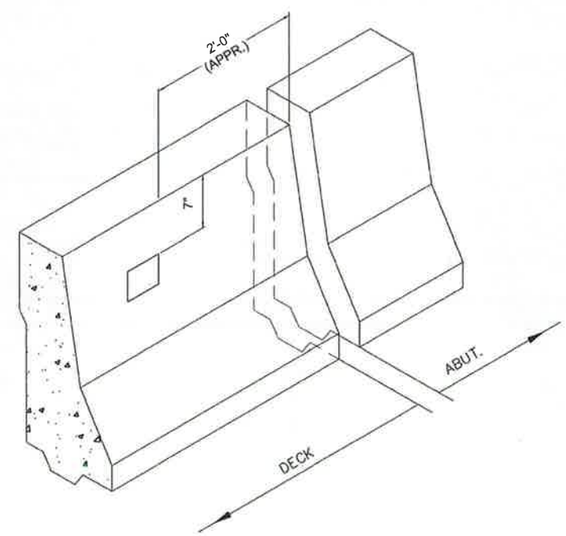

NOTES:

1. TWO (2) PLATES WITH GALVANIZED FLAT HEAD BOLTS IN EXPANSION SHIELDS ARE REQUIRED. THE PLATES SHALL BE GALVANIZED CAST IRON WITH RAISED BLOCK LETTERS OF NEAT SQUARE CUT DESIGN. GRIND FACE OF LETTERS AND BORDERS SMOOTH. BRONZE PLATES AND BOLTS MAY BE SUBSTITUTED FOR GALVANIZED CAST IRON.
2. EACH PLATE IS TO BE PLACED AT EACH END OF THE BRIDGE ON THE ROADWAY FACE OF THE CONCRETE BARRIER RAILING AT THE END OF DECK AND LOCATED ON THE RIGHT-HAND SIDE AS ONE APPROACHES BRIDGE.

KELLY R. HEATH
NEW MEXICO
18915
PROFESSIONAL ENGINEER

NAVAJO DIVISION OF TRANSPORTATION

BRIDGE ESTIMATED QUANTITIES

Designed by: KRH	Date: 10/19		
Drawn by: GMG	Date: 10/19		
Checked by: DDM	Date: 10/19		
File Name: QUANTITIES.DWG			

NAVAJO D.O.T

REGION	STATE	RESERVATION	ROUTE	PROJECT NO.	SHEET	TOTAL SHEETS
NORTH	NEW MEXICO	NAVAJO	N5012	N5012(1)1,2&4	18	75

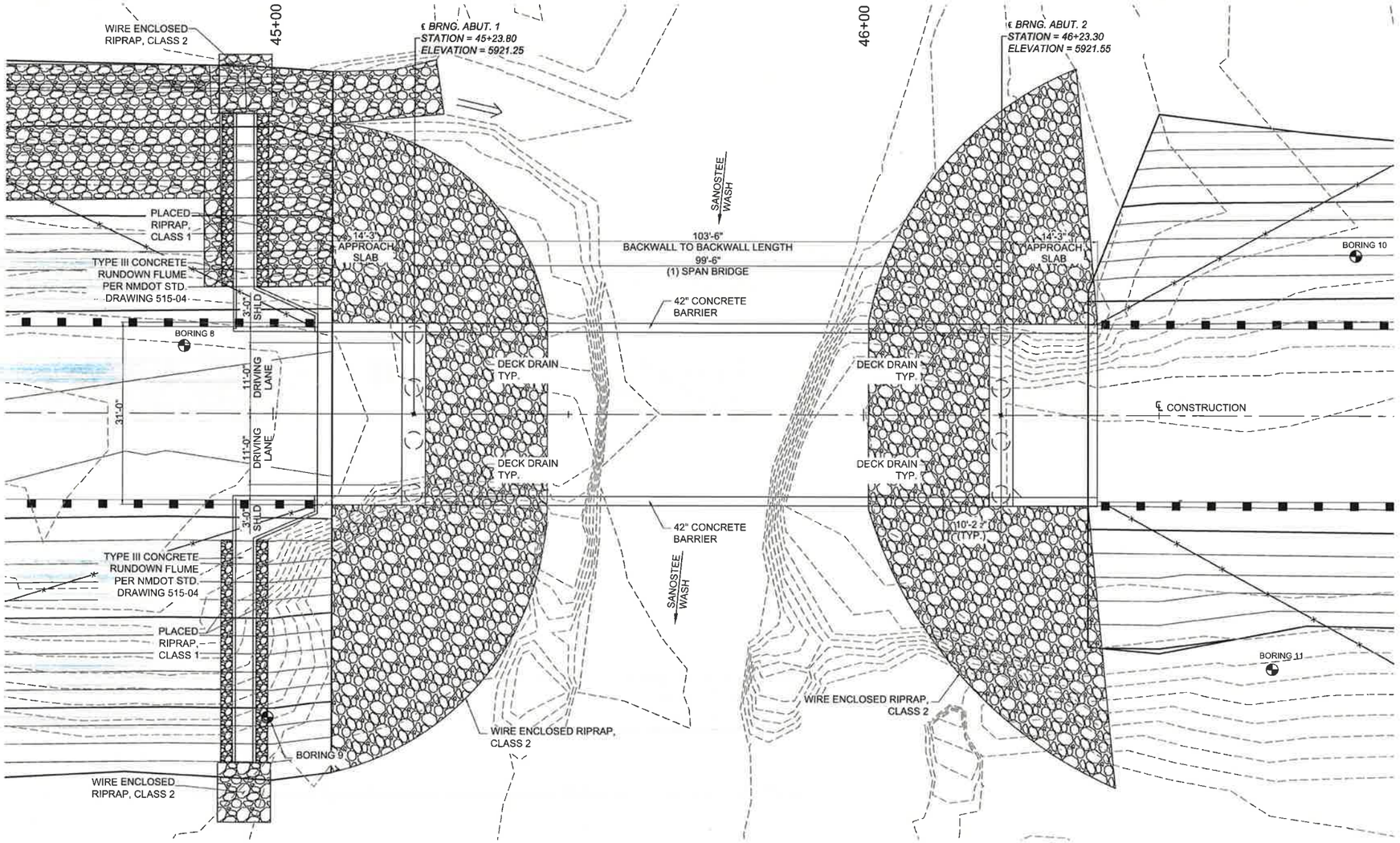

PLAN ALONG ℄ CONSTRUCTION

SCALE: 1:10

NAVAJO DIVISION OF TRANSPORTATION

BRIDGE PLAN

Designed by: KRH	Date: 10/19		
Drawn by: GMG	Date: 10/19		
Checked by: JDM	Date: 10/19		
File Name: STRUCTURE PLAN AND PROFILE.DWG			

NAVAJO D.O.T

KELLY R. HEATH NEW MEXICO 18915 PROFESSIONAL ENGINEER

M:\TRN\17-100-090-10\2_DISCIPLINES_SHEETS\4_SHEETS - STRUCTURAL\STRUCTURE PLAN AND PROFILE.DWG
1/30/2020 5:14 PM

REGION	STATE	RESERVATION	ROUTE	PROJECT NO.	SHEET	TOTAL SHEETS
NORTH	NEW MEXICO	NAVAJO	N5012	N5012(1)1,2&4	19	75

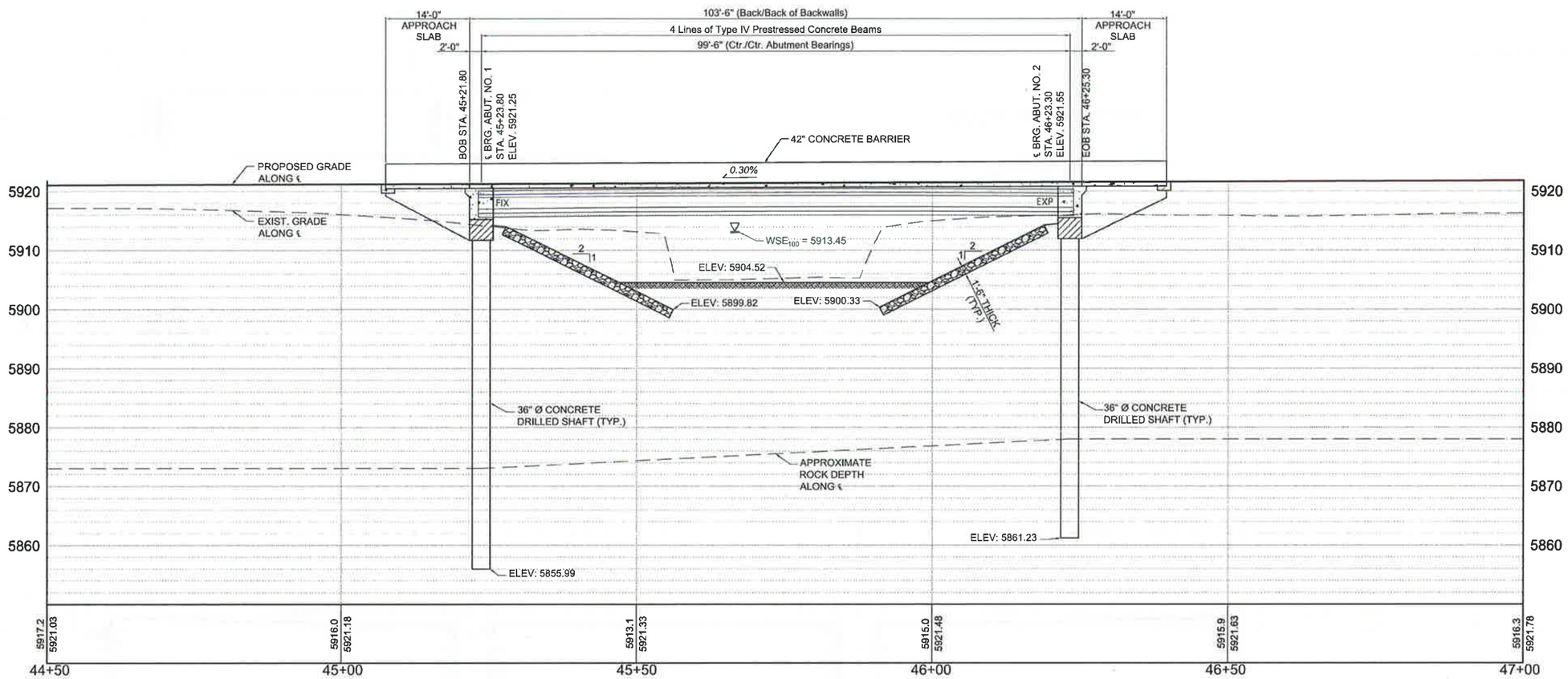

PROFILE ALONG ℄ CONSTRUCTION

SCALE: 1:10

WATERWAY DATA:

WATERWAY:	SANOSTEE WASH
DRAINAGE AREA:	61.53 SQ. MILE
Q_{100}:	5840.4 CFS
Q_{500}:	9012.7 CFS
V_{100}:	13.32 FT/S
V_{500}:	14.83 FT/S
WSE_{100}:	5913.45 FT
WSE_{500}:	5917.39 FT
100 YEAR SCOUR:	6.82 FT
FREEBOARD:	2.00 FT

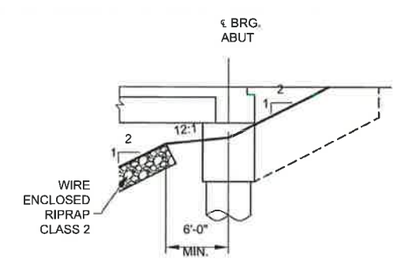

GRADING AT ABUTMENT WINGWALL

KELLY R. HEATH NEW MEXICO 18915 PROFESSIONAL ENGINEER

NAVAJO DIVISION OF TRANSPORTATION

BRIDGE PROFILE

Designed by: KRH	Date: 10/19		
Drawn by: GMG	Date: 10/19		
Checked by: DDM	Date: 10/19		
File Name: STRUCTURE PROFILE.DWG			

NAVAJO D.O.T

REGION	STATE	RESERVATION	ROUTE	PROJECT NO.	SHEET	TOTAL SHEETS
NORTH	NEW MEXICO	NAVAJO	N5012	N5012(1)1,2&4	20	75

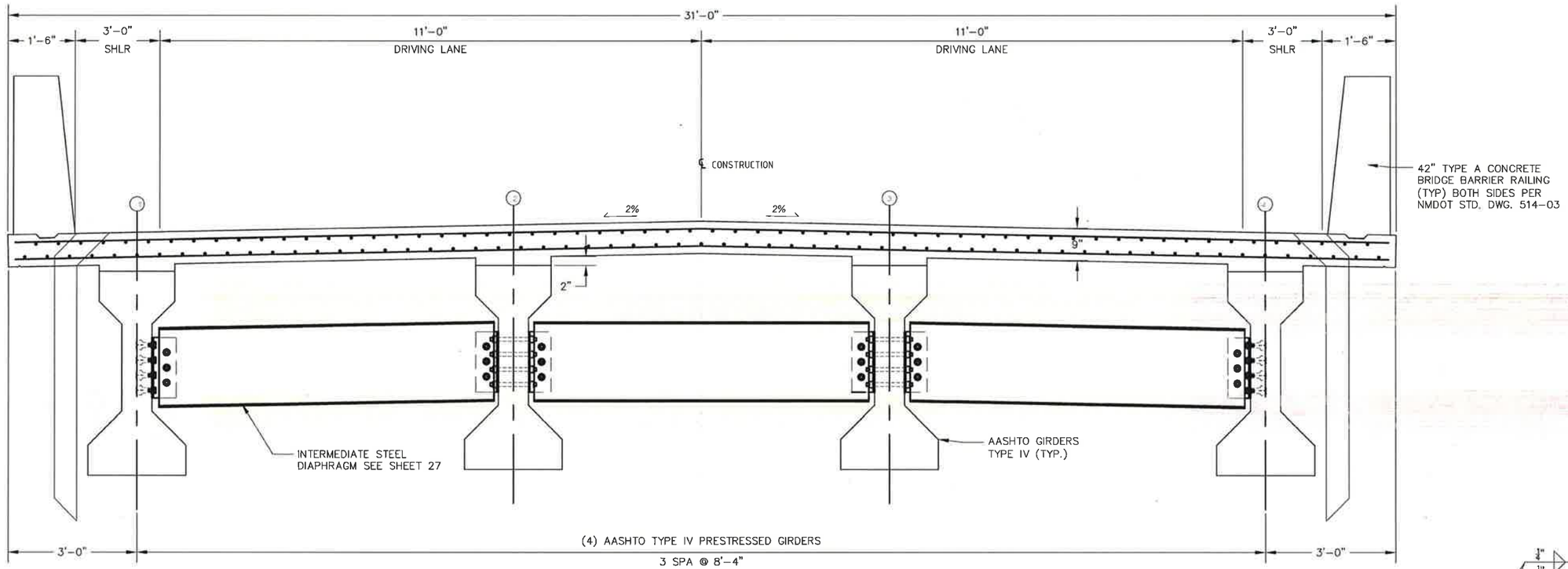

TRANSVERSE SECTION
LOOKING UPSTATION

SCALE: N.T.S.

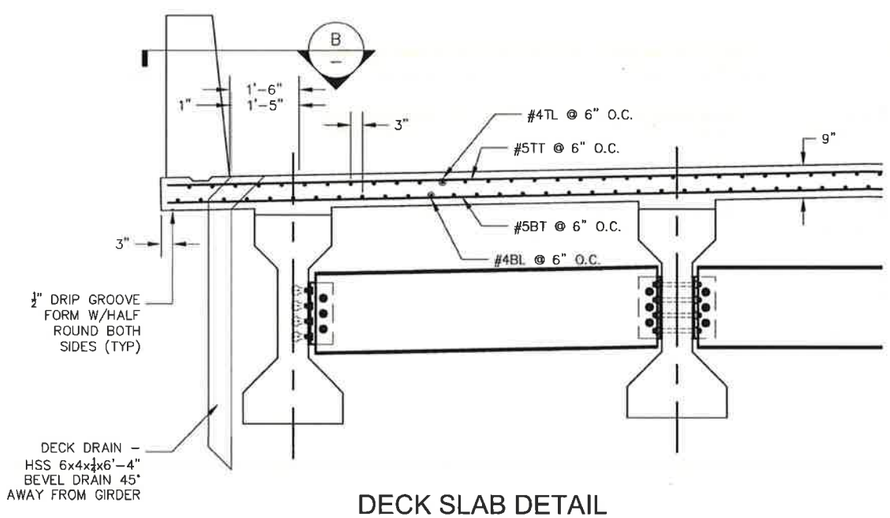

DECK SLAB DETAIL

SCALE: N.T.S.

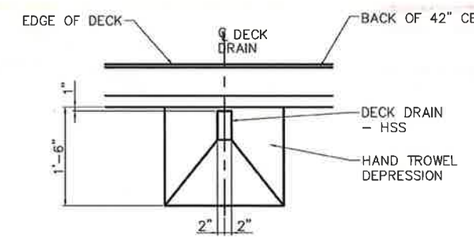

DECK DRAIN PLAN

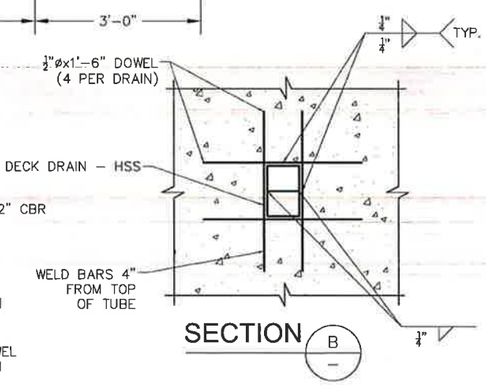

SECTION B

KELLY R. HEATH
NEW MEXICO
18915
PROFESSIONAL ENGINEER

NAVAJO DIVISION OF TRANSPORTATION

TRANSVERSE SECTION

Designed by: KRH	Date: 10/19	NAVAJO D.O.T
Drawn by: GMG	Date: 10/19	
Checked by: DDM	Date: 10/19	
File Name: TRANSVERSE SECTION.DWG		

REGION	STATE	RESERVATION	ROUTE	PROJECT NO.	SHEET	TOTAL SHEETS
NORTH	NEW MEXICO	NAVAJO	N5012	N5012(1)1,2&4	21	75

FOUNDATION INFORMATION		
	ABUTMENT NO. 1	ABUTMENT NO. 2
D.S. TYPE:	36" D.S.	36" D.S.
NUMBER OF D.S.:	4	4
APPLIED STRUCTURAL LOAD/D.S.:	681 kips	681 kips
RU/D.S.:	825 kips	750 kips
MINIMUM D.S. TIP ELEVATION:	5855.97 ft	5861.20 ft
ESTIMATED D.S. TIP ELEVATION:	5855.97 ft	5861.20 ft

UNIFIED SOIL CLASSIFICATION SYSTEM

Soils are visually classified by the Unified Soil Classification system on the boring logs presented in this report. Grain-size analysis and Atterberg Limits Tests are often performed on selected samples to aid in classification. The classification system is briefly outlined in this chart. For a more detailed description of the system, see "The Unified Soil Classification System", Corp of Engineers, U.S. Army Technical Memorandum No. 3-357 (Revised April 1960) or ASTM Designation: D2487-66T.

MAJOR DIVISIONS				GRAPHIC SYMBOL	GROUP SYMBOL	TYPICAL NAMES
COARSE-GRAINED SOILS (Less than 50% passes No. 200 sieve)	GRAVELS (50r less of coarse fraction passes No. 4 sieve)	CLEAN GRAVELS (Less than 5% passes No. 200 sieve)			GW	Well graded gravel, gravel-sand mixtures, or sand-gravel-cobble mixtures.
					GP	Poorly graded gravels, gravel-sand mixtures, or sand-gravel-cobble mixtures.
		GRAVELS WITH FINES (More than 12% passes No. 200 sieve)	Limits plot below "A" line and hatched zone on plasticity chart.		GM	Silty gravels, gravel-sand-silt mixtures.
			Limits plot above "A" line and hatched zone on plasticity chart.		GC	Clayey gravels, gravel-sand-clay mixtures.
	SANDS (More than 50f coarse fraction passes No. 4 sieve)	CLEAN SANDS (Less than 5% passes No. 200 sieve)			SW	Well graded sands, gravelly sands.
					SP	Poorly graded sands, gravelly sands.
		SANDS WITH FINES (More than 12% passes No. 200 sieve)	Limits plot below "A" line and hatched zone on plasticity chart.		SM	Silty sands, sand-silt mixtures.
			Limits plot above "A" line and hatched zone on plasticity chart.		SC	Clayey sands, sand-clay mixtures.
FINE-GRAINED SOILS (50r more passes No. 200 sieve)	SILTS Limits plot below "A" line and hatched zone on plasticity chart.	SILTS OF LOW PLASTICITY (Liquid Limit less than 50)			ML	Inorganic silts, clayey silts with slight plasticity.
		SILTS OF HIGH PLASTICITY (Liquid Limit more than 50)			MH	Inorganic silts, micaceous or diatomaceous silty soils, elastic silts.
	CLAYS Limits plot above "A" line and hatched zone on plasticity chart.	CLAYS OF LOW PLASTICITY (Liquid Limit less than 50)			CL	Inorganic clays of low to medium plasticity, gravelly, sandy, silty and/or lean clays.
		CLAYS OF HIGH PLASTICITY (Liquid Limit more than 50)			CH	Inorganic clays of high plasticity, fat clays, sandy clays of high plasticity.

NOTE: Coarse grained soils with between 5% and 12% passing the No. 200 sieve and fine grained soils with limits plotting in the hatched zone on the plasticity chart are to be denoted by double symbols.

NOTE: BORINGS AND SOUNDINGS PERFORMED BY WOOD ENVIRONMENT AND INFRASTRUCTURE SOLUTIONS, INC. PROJECT # 19-517-00007. GEOTECHNICAL REPORT COMPLETED BY WOOD ENVIRONMENT AND INFRASTRUCTURE SOLUTIONS, INC. PROJECT # 19-517-00007.

NOTE: THE GEOTECHNICAL INVESTIGATION REPORT WAS PROVIDED ALONG WITH THE PLANS AND CONTRACT DOCUMENTS. USE OF THE DATA CONTAINED HERE OR IN THE ORIGINAL REPORT IS AT THE DISCRETION OF THE USER WHO IS RESPONSIBLE FOR ALL INTERPRETATIONS OR ASSUMPTIONS BASED ON THIS DATA.

NOTE: HSA - HOLLOW STEM AUGER (CME-75)
SS - SPLIT SPOON SAMPLER
T - THIN WALLED TUBE SAMPLER
S - SHELBY TUBE
B - BULK SAMPLE
C - CORE RUN
SPT - STANDARD PENETRATION TEST
DRIVING WEIGHT:140 LBS (63.5 kg)

SAMPLE TYPE:
G - GRAB SAMPLE
R - RING SAMPLE (2.4 in I.D.)
N - SPLIT SPOON SAMPLER

KELLY R. HEATH
NEW MEXICO
18915
PROFESSIONAL ENGINEER

NAVAJO DIVISION OF TRANSPORTATION

FOUNDATION PLAN

Designed by: KRH	Date: 10/19	NAVAJO DOT
Drawn by: GMG	Date: 10/19	
Checked by: DDM	Date: 10/19	
File Name: FOUNDATION PLAN.DWG		

REGION	STATE	RESERVATION	ROUTE	PROJECT NO.	SHEET	TOTAL SHEETS
NORTH	NEW MEXICO	NAVAJO	N5012	N5012(1)1,2&4	22	75

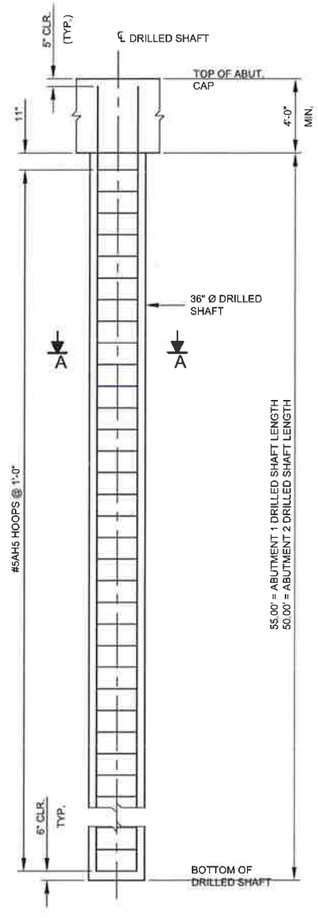

TYPICAL ABUTMENT DRILLED SHAFTS

SUBSTRUCTURE DATA

LOCATION	DRILLED SHAFT DIAMETER (IN.)	DRILLED SHAFT #	STATION	OFFSET	DRILLED SHAFT TOP ELEVATION	DRILLED SHAFT BOTTOM ELEVATION	ESTIMATED DRILLED SHAFT LENGTH (FT.)	SERVICE LOAD (kips)	STRENGTH LOAD (kips)	NOMINAL GEOTECHNICAL RESISTANCE (kips)	FACTORED RESISTANCE (kips)	BOTTOM OF CAP ELEVATION (FT.)
ABUT. No. 1	36	1	45+23.80	13.36 LT	5910.99	5855.99	55.00	457.00	681.00	636.00	825.00	5910.99
		2	45+23.80	4.46 LT								
		3	45+23.80	4.46 RT								
		4	45+23.80	13.36 RT								
ABUT. No. 2	36	5	46+23.30	13.36 LT	5911.23	5861.23	50.00	457.00	681.00	636.00	750.00	5911.23
		6	46+23.30	4.46 LT								
		7	46+23.30	4.46 RT								
		8	46+23.30	13.36 RT								

NOTES:

1. THE CONTRACTOR SHALL BE RESPONSIBLE FOR PROVIDING SUPPORT OF REINFORCING CAGES DURING FABRICATION, ERECTION AND PLACEMENT OF CONCRETE. PLANS SHOWING REINFORCING CAGE SUPPORT, METHODS OF ERECTION AND CENTERING DEVICES SHALL BE SUBMITTED TO THE BRIDGE FOUNDATION ENGINEER OF RECORD FOR REVIEW AND APPROVAL PRIOR TO CONSTRUCTION.

2. AT THE OPTION OF THE CONTRACTOR, FULL LENGTH CAGES EXTENDING FROM TIP OF DRILLED SHAFT TO THE TOP OF EMBEDMENT IN PIER CAP MAY BE USED IN LIEU OF MECHANICAL SPLICES. MECHANICAL REINFORCEMENT SPLICES SHALL BE OF A THREADED TYPE AND SHALL BE CAPABLE OF DEVELOPING 125% OF THE YIELD STRENGTH OF THE BAR. CENTERLINES OF MECHANICAL SPLICES SHALL BE STAGGERED 6' BETWEEN BARS AND MUST BE A MINIMUM OF 4 FEET ABOVE THE TOP OF THE DRILLED SHAFT. MECHANICAL SPLICE DIAMETER MUST BE SUCH THAT 2" MINIMUM COVER ISMAINTAINED. MECHANICAL SPLICES SHALL BE INSTALLED AS SPECIFIED BY THE MANUFACTURER AND A MANUFACTURER'S REPRESENTATIVE SHALL BE PRESENT DURING INSTALLATION OF THE DEVICES. ONE COPY OF THE MANUFACTURER'S RECOMMENDED INSTALLATION PROCEDURES SHALL BE FURNISHED TO THE CONSTRUCTION MANAGER AT LEAST TWO WEEKS BEFORE THE WORK OF THE SPLICING IS BEGUN. COST OF THE MECHANICAL SPLICES SHALL BE INCLUDED IN THE UNIT BID PER POUND FROM ITEM NO.55401-1000 REINFORCING STEEL.

3. CLASS A CONCRETE SHALL MEET THE REQUIREMENTS OF SECTION 552 - STRUCTURAL CONCRETE, PRIOR TO CONCRETE PLACEMENT, THE CONTRACTOR SHALL PROVIDE TEST RESULTS OF BOTH A TRIAL MIX AND A SLUMP LOSS TEST CONDUCTED BY AN APPROVED TESTING LABORATORY, USING APPROVED METHODS UNLESS OTHERWISE DIRECTED BY THE CONSTRUCTION MANAGER. THE TESTS WILL BE CONDUCTED TO DEMONSTRATE THAT THE CONCRETE MEETS THE REQUIREMENT OF THIS SUBSECTION FOR THE REQUIRED SLUMP RANGE AT THE TIME OF PLACEMENT AND OF SUBSECTION 565.08, CONCRETE PLACEMENT FOR THE REQUIRED SLUMP OVER THE SPECIFIED PLACEMENT PERIOD. THE TRIAL MIX AND SLUMP LOSS TESTS SHALL BE CONDUCTED USING CONCRETE AND AMBIENT TEMPERATURES APPROPRIATE FOR SITE CONDITIONS.

4. THE LOCATION OF DRILLED SHAFTS AND THEIR CONCENTRIC REINFORCEMENT STEEL CAGES SHALL BE WITHIN 3" OF PLAN POSITION AT THE TOP OF THE SHAFT PER SUBSECTION 565.06.

5. TOP OF THE ABUTMENT DRILLED SHAFT SHALL BE EMBEDDED INTO THE ABUTMENT CAP 1".

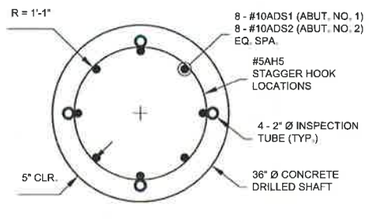

SECTION A-A

ABUT. NO. 1 AND NO. 2 INSTALL FOUR (4) 2" I.D. PVC TUBES FOR CSL TESTING PER SECTION 505

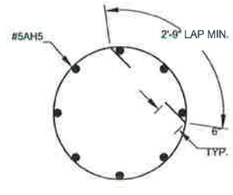

#5AH5 HOOP

KELLY R. HEATH
NEW MEXICO
18915
PROFESSIONAL ENGINEER

NAVAJO DIVISION OF TRANSPORTATION

DRILLED SHAFT DETAILS

Designed by: KRH	Date: 10/19	NAVAJO D.O.T
Drawn by: GMG	Date: 10/19	
Checked by: DDM	Date: 10/19	
File Name: DRILLED SHAFT DETAILS.DWG		

REGION	STATE	RESERVATION	ROUTE	PROJECT NO.	SHEET	TOTAL SHEETS
NORTH	NEW MEXICO	NAVAJO	N5012	N5012(1)1,2&4	23	75

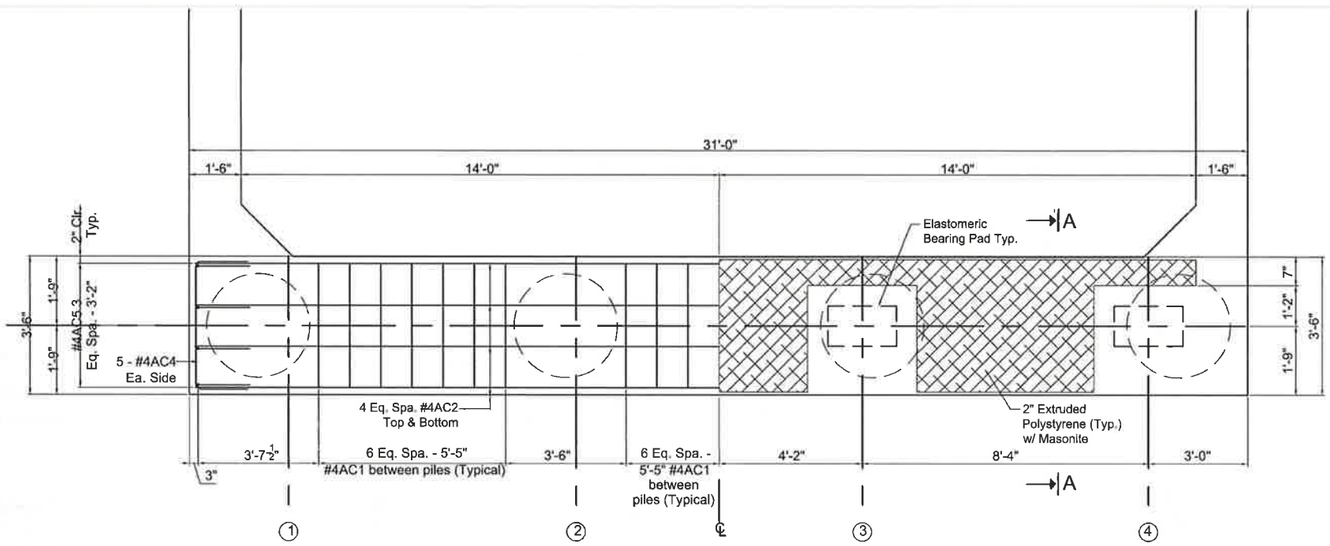

PLAN - ABUTMENT NO. 2 (AS SHOWN)
PLAN - ABUTMENT NO. 1 (OPP. HAND)

N.T.S.

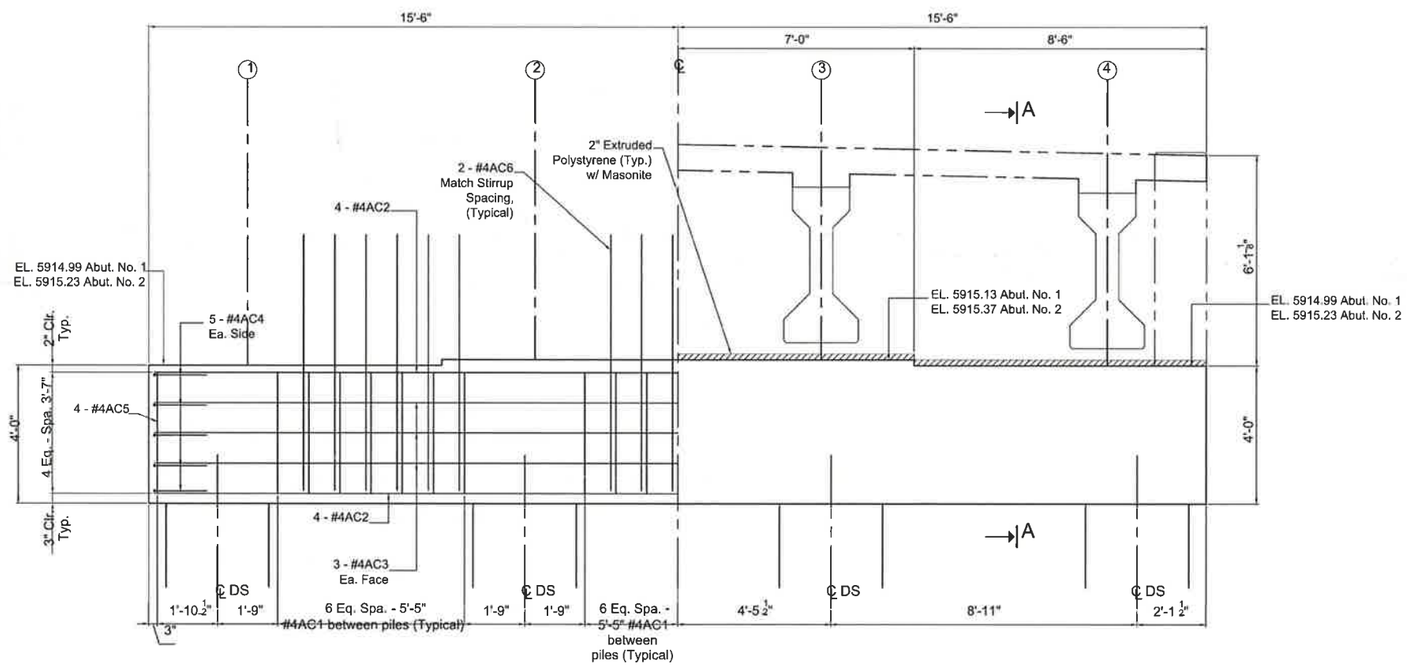

ABUTMENT ELEVATION

N.T.S.

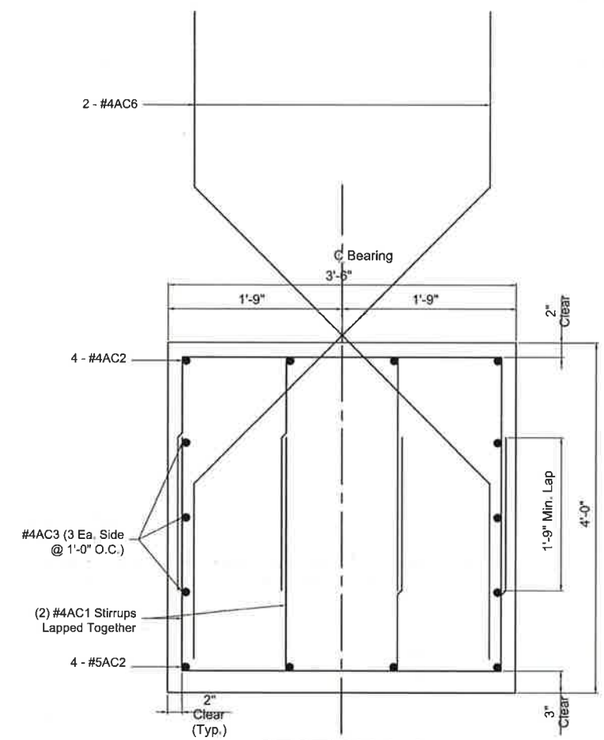

SECTION A-A

N.T.S.

NAVAJO DIVISION OF TRANSPORTATION

ABUTMENT DETAILS

KELLY R. HEATH NEW MEXICO 18915 PROFESSIONAL ENGINEER

NAVAJO D.O.T

REGION	STATE	RESERVATION	ROUTE	PROJECT NO.	SHEET	TOTAL SHEETS
NORTH	NEW MEXICO	NAVAJO	N5012	N5012(1)1,2&4	24	75

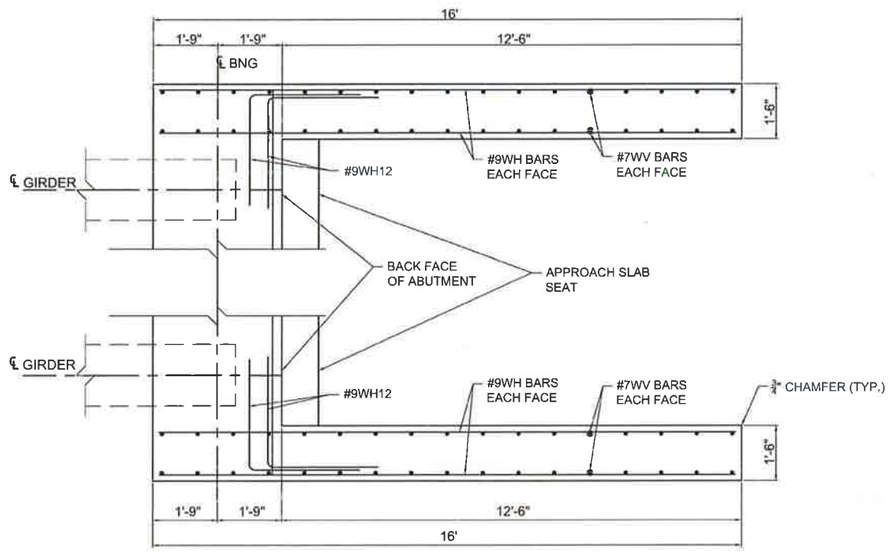

PLAN

ABUTMENT NO. 2 SHOWN
ABUTMENT NO. 1 SIMILAR
SCALE: 1/2" = 1'-0"

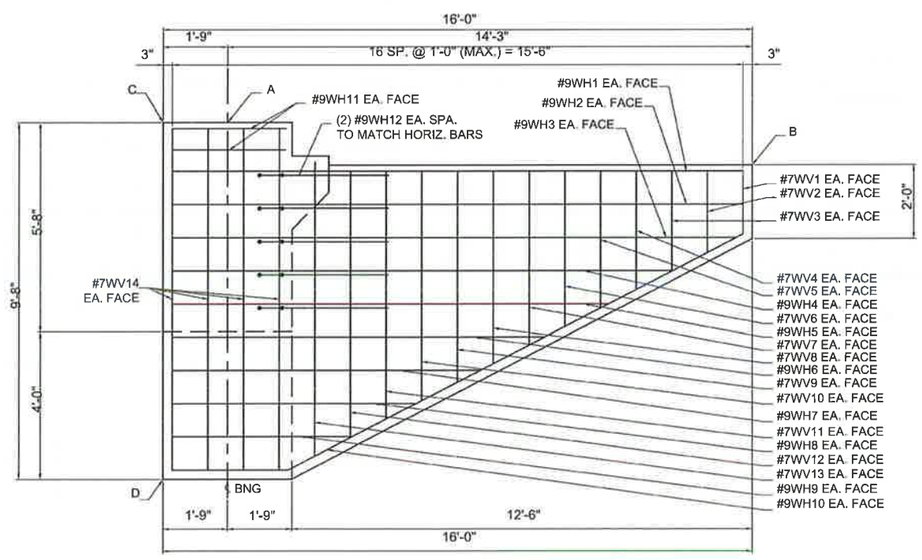

ELEVATION

SCALE: 1/2" = 1'-0"

WINGWALL ELEVATIONS				
LOCATION	A	B	C	D
ABUTMENT 1 LT.	5919.94	5918.48	5919.95	5910.99
ABUTMENT 1 RT.	5919.94	5918.48	5919.95	5910.99
ABUTMENT 2 LT.	5920.24	5918.87	5920.24	5911.23
ABUTMENT 2 RT.	5920.24	5918.87	5920.24	5911.23

KELLY R. HEATH
NEW MEXICO
18915
PROFESSIONAL ENGINEER

NAVAJO DIVISION OF TRANSPORTATION

WINGWALL DETAILS

NAVAJO D.O.T

REGION	STATE	RESERVATION	ROUTE	PROJECT NO.	SHEET	TOTAL SHEETS
NORTH	NEW MEXICO	NAVAJO	N5012	N5012(1)1,2&4	25	75

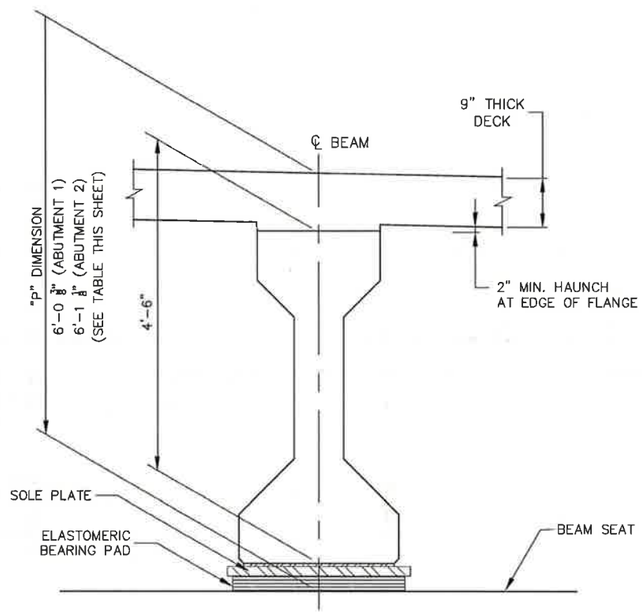

SUPERSTRUCTURE DEPTH DETAIL @ ℄ BEARING

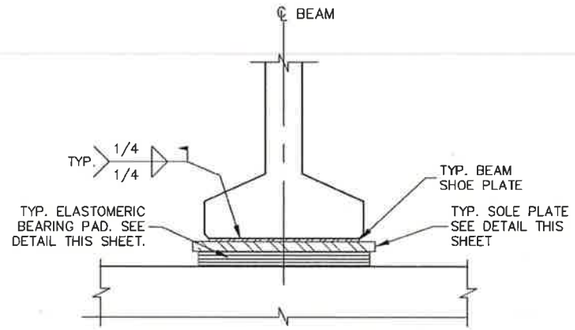

SECTIONAL VIEW

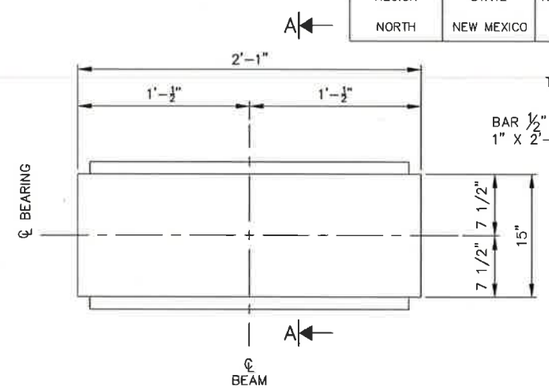

SOLE PLATE DETAIL (PLAN VIEW)

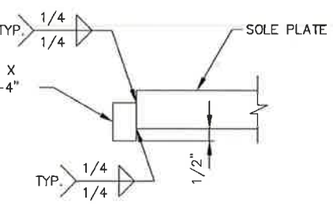

DETAILS

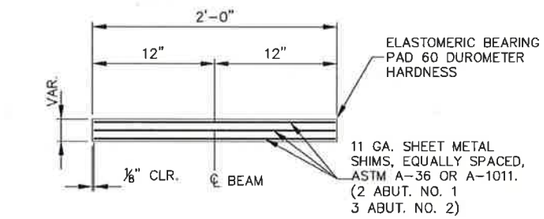

SECTION OF ABUTMENT ELASTOMERIC BEARING PAD

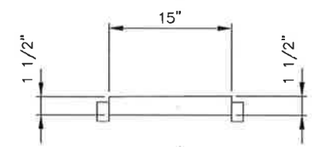

SOLE PLATE DETAIL (SECTION A-A)

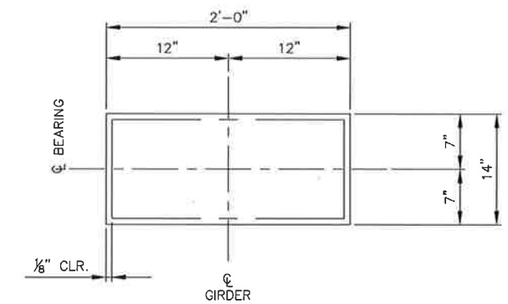

PLAN VIEW OF ABUTMENT ELASTOMERIC BEARING PAD

BEARING SEAT ELEVATIONS

LOCATION	DESCRIPTION	1	2	3	4
ABUT. 1 CL BRG.	DECK ELEVATION	5921.00	5921.17	5921.17	5921.00
	DECK THICKNESS (inches)	9.000	9.000	9.000	9.000
	HAUNCH (inches)	5.491	5.491	5.491	5.491
	BEAM (inches)	54.000	54.000	54.000	54.000
	SOLE PLATE (inches)	1.500	1.500	1.500	1.500
	BEARING (inches)	2.125	2.125	2.125	2.125
	TOTAL "P" DIMENSION	72.116	72.116	72.116	72.116
	SEAT ELEVATION	5914.99	5915.16	5915.16	5914.99

LOCATION	DESCRIPTION	1	2	3	4
ABUT. 2 CL BRG.	DECK ELEVATION	5921.30	5921.47	5921.47	5921.30
	DECK THICKNESS (inches)	9.000	9.000	9.000	9.000
	HAUNCH (inches)	5.491	5.491	5.491	5.491
	BEAM (inches)	54.000	54.000	54.000	54.000
	SOLE PLATE (inches)	1.500	1.500	1.500	1.500
	BEARING (inches)	2.875	2.875	2.875	2.875
	TOTAL "P" DIMENSION	72.866	72.866	72.866	72.866
	SEAT ELEVATION	5915.23	5915.39	5915.39	5915.23

LOCATION	W (IN)	L (IN)	NO. INTERNAL LAMS	EXTERIOR LAM THICKNESS (IN)	INTERNAL LAM THICKNESS (IN)	NO. SHIMS	SHIM THICKNESS (IN)	TOTAL THICKNESS (IN)	DESIGN LOAD (K) DL (K)	DESIGN LOAD (K) LL (K)	NO. REQUIRED	MOVEMENT LENGTH (IN)
ABUT. NO. 1	24	14	2	1/4	5/8	3	1/8	2 1/8	216.7	97.1	4	0
ABUT. NO. 2	24	14	3	1/4	5/8	4	1/8	2 7/8	216.7	97.1	4	7/8

KELLY R. HEATH NEW MEXICO 18915 PROFESSIONAL ENGINEER

NAVAJO DIVISION OF TRANSPORTATION

BEARING DETAILS

NAVAJO D.O.T

REGION	STATE	RESERVATION	ROUTE	PROJECT NO.	SHEET	TOTAL SHEETS
NORTH	NEW MEXICO	NAVAJO	N5012	N5012(1)1,2&4	26	75

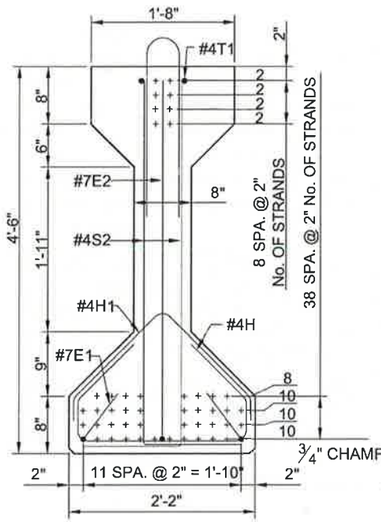

END VIEW

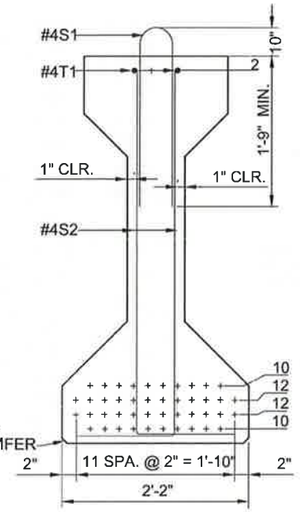

SECTION NEAR ℄ OF GIRDER

GIRDER DATA	
WEIGHT	81.8 TONS
CAMBER @ RELEASE	4.074 IN.
CAMBER @ ERECTION	7.793 IN.
DEAD LOAD DEFLECTION	4.837 IN.

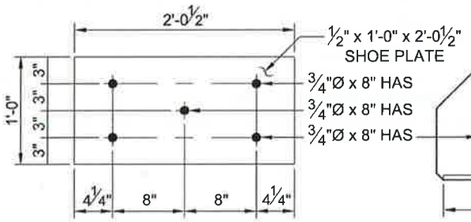

SHOE PLATE DETAIL

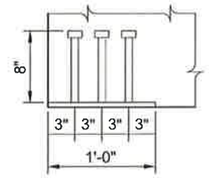

SHOE PLATE ELEVATION

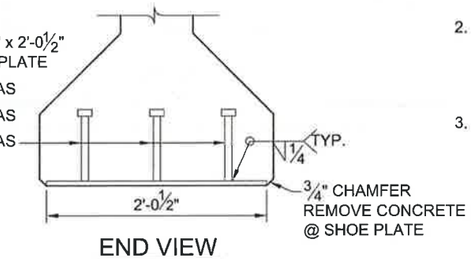

END VIEW SHOE PLATE

GENERAL NOTES

1. THE CAMBER AT ERECTION DIMENSION LISTED IS THE CALCULATED VALUE DUE TO THE EFFECT OF PRESTRESSING WITH THE WEIGHT OF THE GIRDER ACTING, WITH AN ALLOWANCE FOR CAMBER GROWTH TO 90 DAYS. THE CONTRACTOR SHALL LIMIT THE CAMBER GROWTH TO A VALUE NOT TO EXCEED THE PREDICTED CAMBER AT ERECTION DIMENSION BY 1 INCH AT THE TIME OF DECK SLAB PLACEMENT. CAMBER GROWTH IS TO BE LIMITED BY WEIGHTING, FABRICATION SCHEDULING OR OTHER APPROVED MEANS.
2. REINFORCING BARS PROJECTING FROM THE TOP OF THE GIRDER AND ALL REINFORCING LOCATED WITHIN FOUR FEET OF GIRDER ENDS SHALL BE UNCOATED CORROSION RESISTANT STEEL.
3. THE DESIGN SHOWN IS BASED ON THE USE OF 0.6" DIAMETER LOW-RELAXATION STRANDS MEETING THE REQUIREMENTS OF AASHTO M-203 (GRADE 270). INITIAL PRESTRESSING FORCE SHALL BE 43,900 LBS. PER STRAND. SLIGHT OVERSTRESSING UP TO 46,800 LBS. PER STRAND WILL BE ALLOWED TO OFFSET SEATING LOSSES. THE DESIGN IS BASED ON 0.6" Ø STRANDS.

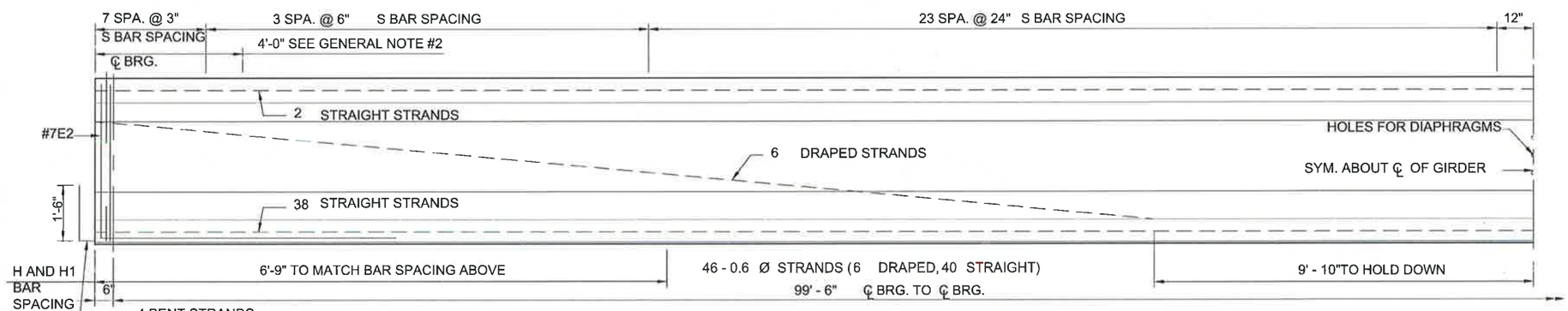

HALF ELEVATION TYPE IV GIRDERS 4 REQ'D

(fpe = 155.4 KIPS PER STRAND; LOSSES = 47.12 KIPS PER STRAND)

GIRDER

BAR	TYPE	SIZE	"R"	"X"	LENGTH	NO. REQ'D
E1	2	#7	3⅜"	8'-0"	8'-8"	4
E2	2	#7	3⅜"	4'-2"	12'-2"	2
S1	4	#4	2¾"	1'-5"	3'-6"	66
S2	2	#4	1½"	4'-2"	5'-2"	132
H	3	#4	1½"		4'-8"	22
H1	5	#4	1½"		3'-3"	22
T1	1	#4			52'-3"	4

BAR BENDING DIAGRAM

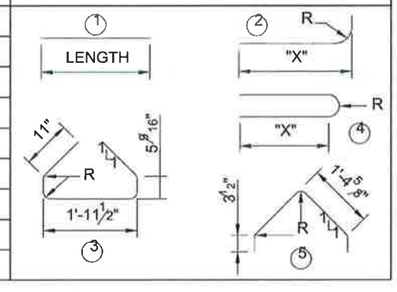

BRIDGE DESIGN DATA

DESIGN IS IN ACCORDANCE WITH THE AASHTO LRFD BRIDGE DESIGN SPECIFICATIONS DATED 2017 AND CURRENT INTERIMS.

GIRDERS

f'ci (MIN. COMPRESSIVE STRENGTH OF CONCRETE AT TIME OF INITIAL PRESTRESS) = 7 ksi.

f'c = 9.5 ksi (ULTIMATE COMPRESSIVE STRENGTH)

PRESTRESSING STEEL:
0.60 DIAMETER SEVEN WIRE LOW RELAXATION STRANDS.

fpu = 270.0 KIPS PER STRAND;
fpy = 202.5 KIPS PER STRAND.

CONVENTIONAL REINFORCING BARS:
fy = 60 KSI

COMPOSITE SLAB:
f'c = 4.5 KSI

ALLOWANCE FOR FUTURE WEARING SURFACE = 30 psf.

LIVE LOAD = HL-93 / NMDOT PERMIT VEHICLE P327-13.

STAY-IN-PLACE DECK FORM = 15 psf.

KELLY R. HEATH NEW MEXICO 18915 PROFESSIONAL ENGINEER

NAVAJO DIVISION OF TRANSPORTATION

PRESTRESSED CONCRETE BEAM DETAILS

Designed by: KRH	Date: 10/19		
Drawn by: GMC	Date: 10/19		
Checked by: DGM	Date: 10/19		
File Name: [illegible]			

NAVAJO D.O.T

M:\TRN\17-100-090-10\2_DISCIPLINES_SHEETS\4_SHEETS - STRUCTURAL\709090_GIRDER.DWG 1/30/2020 5:18 PM

REGION	STATE	RESERVATION	ROUTE	PROJECT NO.	SHEET	TOTAL SHEETS
NORTH	NEW MEXICO	NAVAJO	N5012	N5012(1)1,2&4	27	75

NOTES

1. ALL STRUCTURAL STEEL ELEMENTS IN THIS DETAIL SHALL BE COMPOSED OF WEATHERING STEEL CONFORMING TO AASHTO M270, GRADE 50W, OR HOT-DIPPED GALVANIZED STEEL CONFORMING TO AASHTO M270, GRADE 36. IF WEATHERING STEEL IS USED, ALL ELEMENTS SHALL BE SAND BLASTED TO SSPC SP-6 AND WET PRIOR TO SHIPPING. PAINTING OF THESE ELEMENTS IS NOT REQUIRED.
2. BOLTS SHALL MEET THE REQUIREMENTS OF ASTM F3125 - GRADE A325. IF WEATHERING STEEL IS USED FOR THIS DETAIL, TYPE 3 WEATHERING STEEL BOLTS SHALL BE USED. IF GALVANIZED STEEL ELEMENTS ARE USED, BOLTS SHALL BE GALVANIZED IN ACCORDANCE WITH AASHTO M232.
3. FOR BRIDGES WITHOUT SKEW, THE INTERIOR GIRDER CONNECTION DETAIL SHALL BE USED AS SHOWN. FOR SKEWED BRIDGES, THE OPPOSING CLIP ANGLE SHALL BE REPLACED WITH THE BACK PLATE SHOWN ON THIS SHEET. DIAPHRAGMS SHALL BE OFFSET ON ALL SKEWED BRIDGES TO FACILITATE THE INSTALLATION OF THE BACK PLATES.
4. THE VERTICAL DISTANCE BETWEEN ANY TWO HOLES OR INSERTS SHALL NOT VARY FROM THE SPECIFIED DISTANCE BY MORE THAN 1/16". ALSO, THE TOTAL LENGTH OF THE GROUP OF HOLES OR INSERTS SHALL NOT VARY FROM THE DESIGN LENGTH BY MORE THAN 1/16". THE PRESTRESSED GIRDER FABRICATOR SHALL TAKE APPROPRIATE MEASURES TO ENSURE PROPER PLACEMENT OF INSERTS DURING THE GIRDER FABRICATION PROCESS.
5. CLIP ANGLES AND BACK PLATES SHALL BE ATTACHED TO THE PRESTRESSED GIRDER AT THE GIRDER FABRICATION SITE PRIOR TO TRANSPORT. DIAPHRAGM INSTALLATION SHALL BE COMPLETED PRIOR TO DECK PLACEMENT.
6. THREADED INSERTS AND PIPE INSERTS ARE INCIDENTAL TO THE PRESTRESSED CONCRETE BEAMS.
7. AT LOCATIONS WHERE STEEL IS BEING FASTENED TO CONCRETE, THE MAXIMUM INSTALLATION TENSION FOR THE BOLTS SHALL NOT EXCEED 5 KIPS. TESTS SHALL BE PERFORMED TO DETERMINE THE TORQUE NECESSARY TO ACHIEVE THE SPECIFIED INSTALLATION TENSION.
8. ALL STEEL DIAPHRAGMS SHALL BE STAMPED OR MARKED WITH PAINT ON THE UPSTATION FACE OF DIAPHRAGM INDICATING PLACEMENT OF DIAPHRAGM LEFT OR RIGHT OF THE CENTERLINE OF CONSTRUCTION.

PRESTRESSED CONCRETE BEAM TYPE	H (in.)	A (in.)	B (in.)	C (in.)	D (in.)	L (in.)	N	S1 (in.)	DIAPHRAGM UNIT WEIGHT (lb/ft)*	CLIP ANGLE WEIGHT (lb.)	BACK PLATE WEIGHT (lb.)
TYPE IV	21	11	6 1/2	19 1/2	4	16	3	4	36	20	9

* MULTIPLY BY DIAPHRAGM LENGTH (S - A) TO OBTAIN TOTAL DIAPHRAGM WEIGHT.

m = SLOPE OF BENT PLATE DIAPHRAGM (SEE BRIDGE PLANS FOR ELEVATIONS AT CONNECTION POINTS).

A = THICKNESS OF GIRDER WEB PLUS 3" (SEE TABLE).

B = DISTANCE FROM TOP OF STEEL DIAPHRAGM TO CENTER OF FIRST HOLE.

C = DISTANCE FROM TOP OF BEAM TO C OF FIRST INSERT.

D = DISTANCE FROM CLIP ANGLE EDGE TO CENTER OF FIRST HOLE (CLIP ANGLE/DIAPHRAGM CONNECTION).

H = DEPTH OF BENT PLATE DIAPHRAGM.

L = LENGTH OF BACK PLATES AND CLIP ANGLES.

N = NUMBER OF BOLT SPACES IN GIRDER/CLIP ANGLE CONNECTION.

S1= HOLE SPACING.

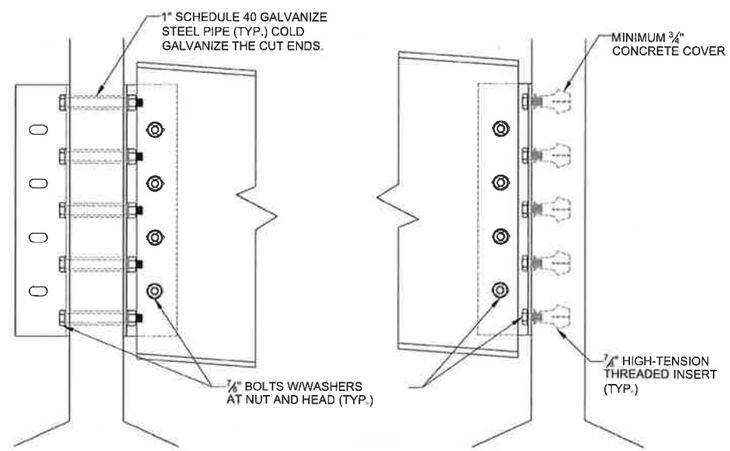

INTERIOR GIRDER CONNECTION DETAIL

EXTERIOR GIRDER CONNECTION DETAIL

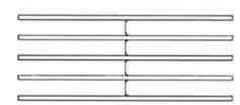

NORMAL (NO SKEW)

DIAPHRAGM PLACEMENT PATTERN

FOR SKEWS BETWEEN 0° AND 10°
USE BENT PLATE CLIP ANGLE DETAIL

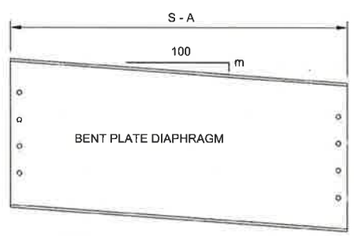

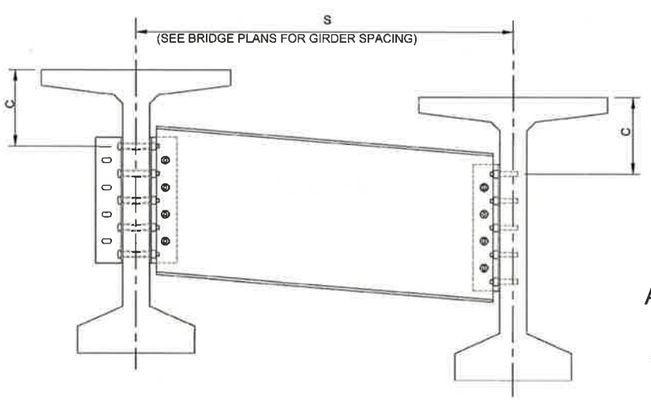

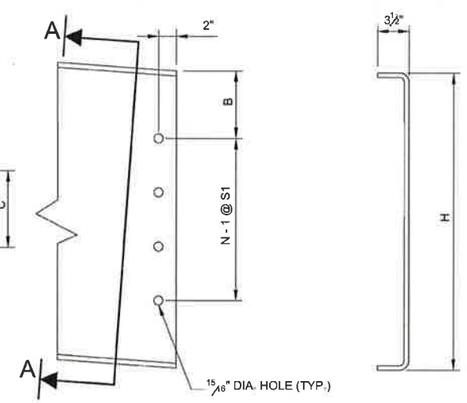

DIAPHRAGM END DETAIL

SECTION A-A

3/8" BENT PLATE DIAPHRAGM
SEE TABLE FOR HEIGHT "H"

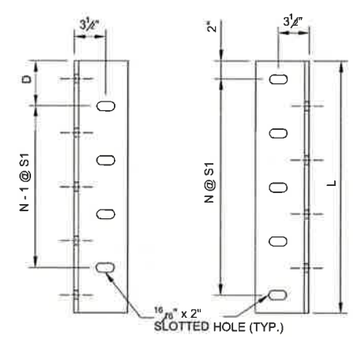

CLIP ANGLE DETAILS

L6 X 6 X 3/8"

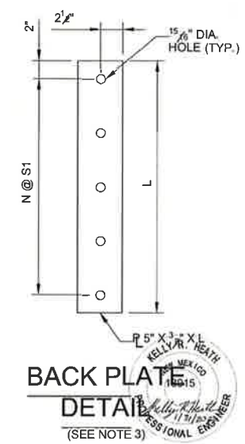

BACK PLATE DETAIL

(SEE NOTE 3)

NAVAJO DIVISION OF TRANSPORTATION		
INTERMEDIATE DIAPHRAGM DETAILS		
Designed by: KRH	Date: 10/19	NAVAJO D.O.T
Drawn by: GMG	Date: 10/19	
Checked by: DDM	Date: 10/19	
File Name:		

M:\TRN\17-100-090-10\2_DISCIPLINES_SHEETS\4_SHEETS - STRUCTURAL\DIAPHRAGM DETAILS.DWG 1/30/2020 5:21 PM

REGION	STATE	RESERVATION	ROUTE	PROJECT NO.	SHEET	TOTAL SHEETS
NORTH	NEW MEXICO	NAVAJO	N5012	N5012(1)1,2&4	28	75

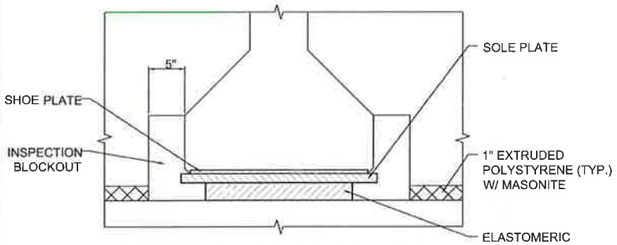

INSPECTION ACCESS

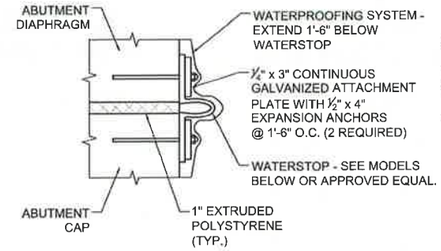

WATERSTOP MANUFACTURERS/MODELS

- GREENSTREAK TEAR WEB MODEL 700
- SOUTHERN METAL PLASTIC PRODUCTS MODEL 73TW
- BOMETALS INC. MODEL TW-938

WATERSTOP DETAIL

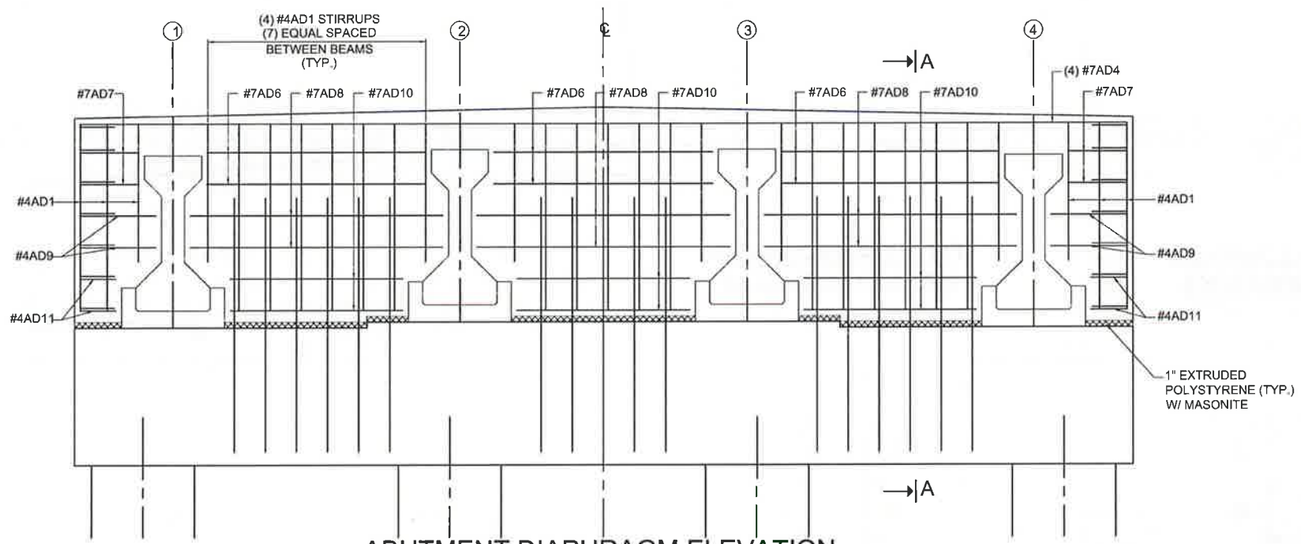

ABUTMENT DIAPHRAGM ELEVATION

(SHOWING DIAPHRAGM REINFORCEMENT BETWEEN BEAMS)
N.T.S.

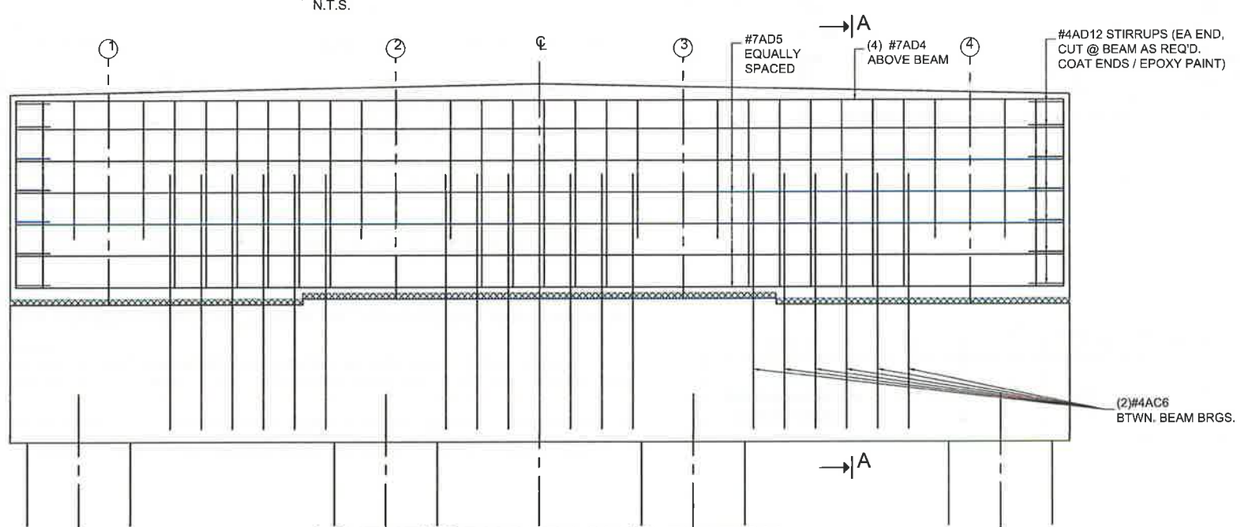

ABUTMENT DIAPHRAGM ELEVATION

(SHOWING DIAPHRAGM REINFORCEMENT BEHIND BEAMS)
N.T.S.

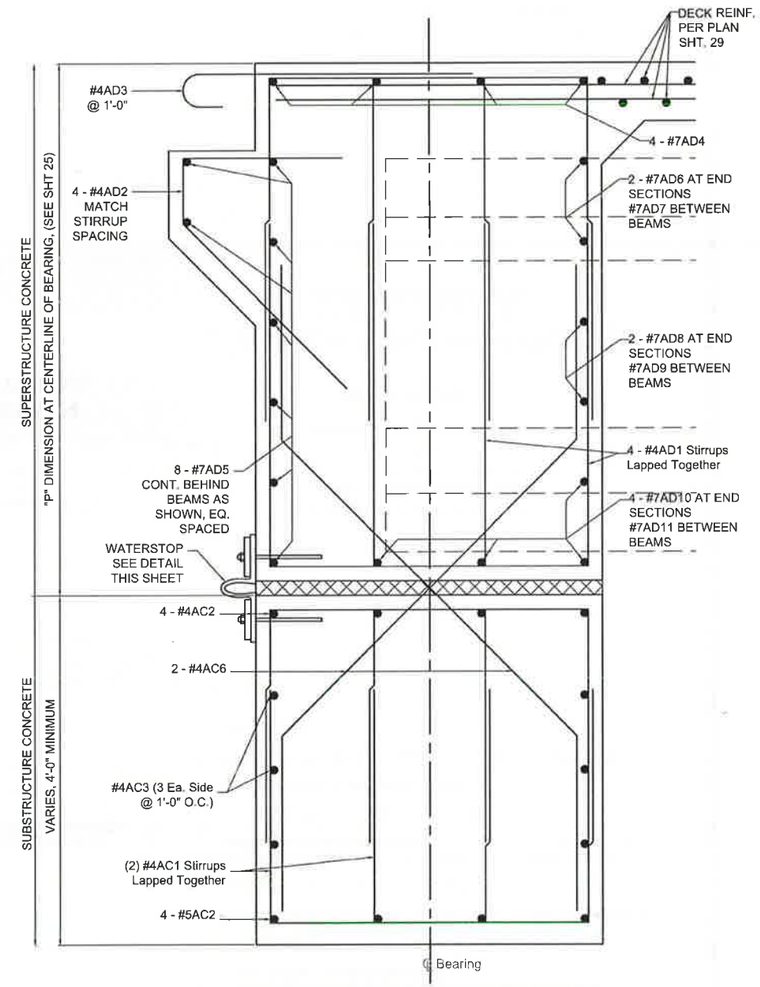

SECTION BETWEEN BEAMS

N.T.S.

KELLY R. HEATH
NEW MEXICO
18915
PROFESSIONAL ENGINEER

NAVAJO DIVISION OF TRANSPORTATION

DIAPHRAGM DETAILS

NAVAJO D.O.T

REGION	STATE	RESERVATION	ROUTE	PROJECT NO.	SHEET	TOTAL SHEETS
NORTH	NEW MEXICO	NAVAJO	N5012	N5012(1)1,2&4	29	75

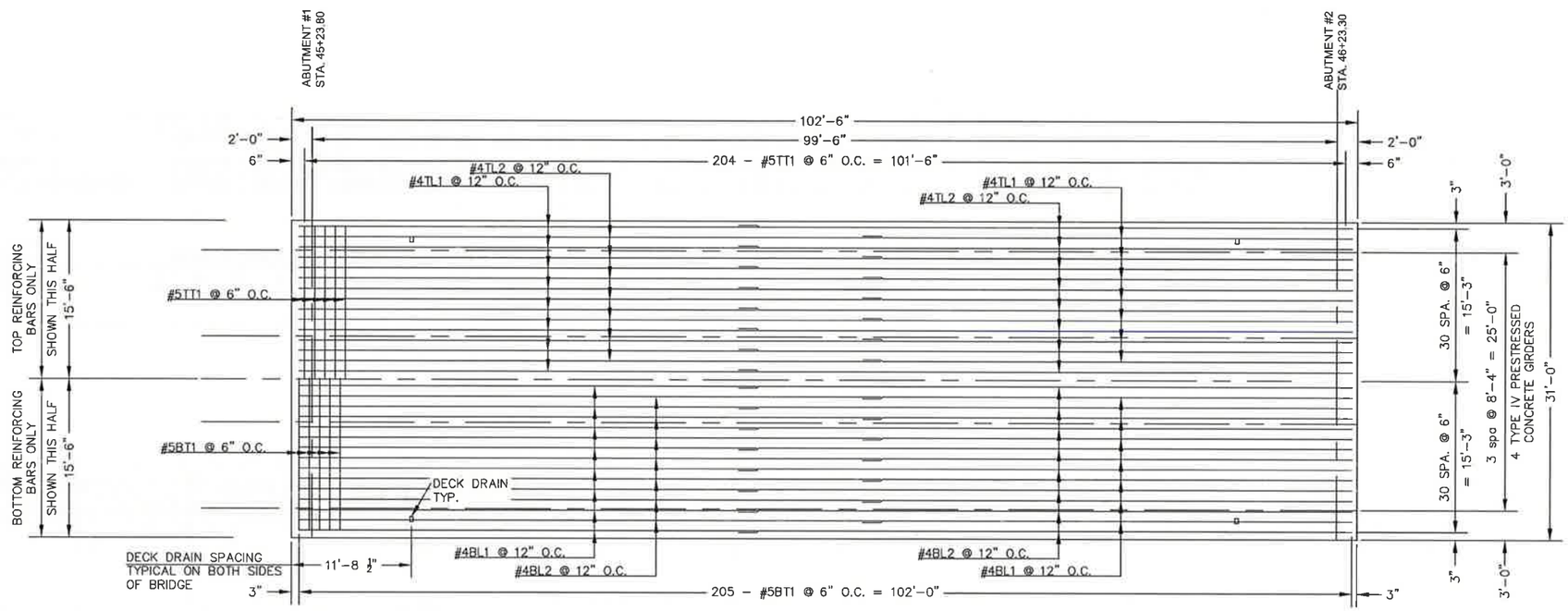

DECK SLAB PLAN

N.T.S.

NAVAJO DIVISION OF TRANSPORTATION

DECK SLAB PLAN

Designed by: KRH	Date: 10/19
Drawn by: GMC	Date: 10/19
Checked by: DDM	Date: 10/19
File Name: DECK SLAB PLAN.DWG	

NAVAJO D.O.T

KELLY R. HEATH NEW MEXICO 18915 PROFESSIONAL ENGINEER

W:\TRN\17-100-090-10\2_DISCIPLINES_SHEETS\4_SHEETS - STRUCTURAL\DECK SLAB PLAN.DWG 1/30/2020 5:42 PM

REGION	STATE	RESERVATION	ROUTE	PROJECT NO.	SHEET	TOTAL SHEETS
NORTH	NEW MEXICO	NAVAJO	N5012	N5012(1)1,2&4	30	75

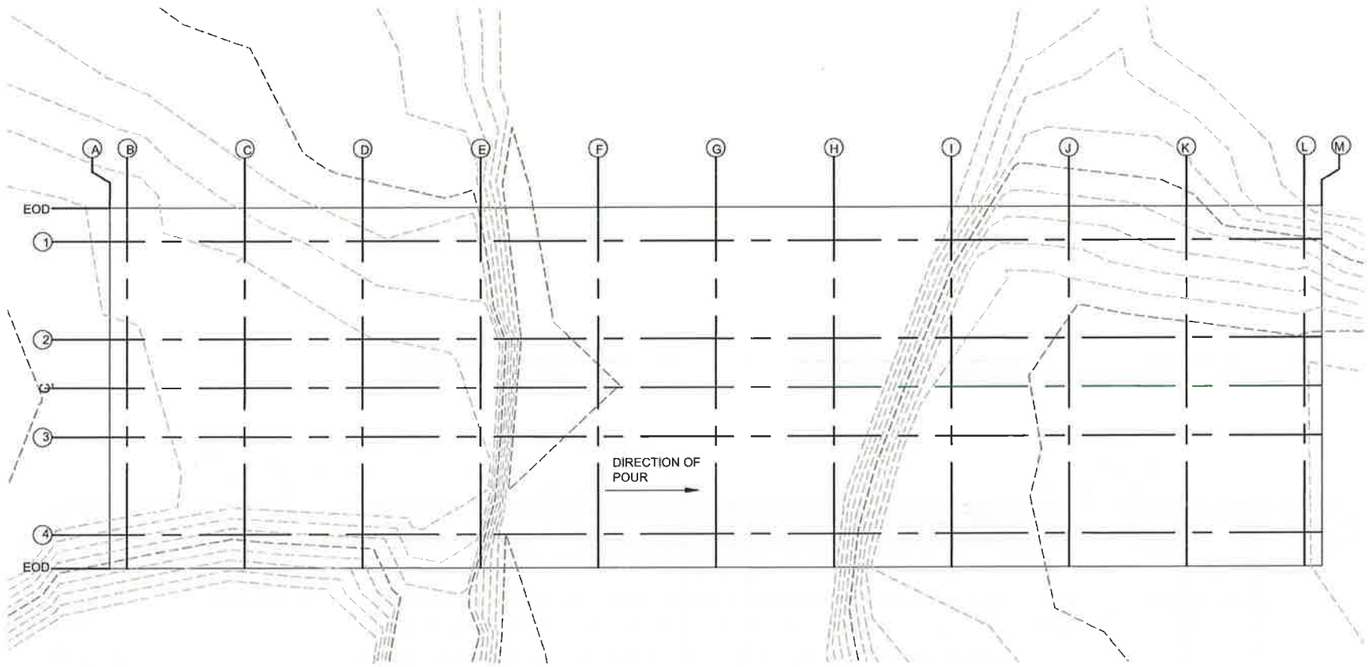

LOCATION DIAGRAM

TOP OF DECK ELEVATIONS													
LOCATION	A	B	C	D	E	F	G	H	I	J	K	L	M
E.O.D.	5920.94	5920.94	5920.97	5921.00	5921.03	5921.06	5921.09	5921.12	5921.15	5921.18	5921.21	5921.24	5921.25
GIRDER 1	5921.00	5921.00	5921.03	5921.06	5921.09	5921.12	5921.15	5921.18	5921.21	5921.24	5921.27	5921.30	5921.31
GIRDER 2	5921.16	5921.17	5921.20	5921.23	5921.26	5921.29	5921.32	5921.35	5921.38	5921.41	5921.44	5921.47	5921.47
CL OF CONSTRUCTION	5921.25	5921.25	5921.28	5921.31	5921.34	5921.37	5921.40	5921.43	5921.46	5921.49	5921.52	5921.55	5921.56
GIRDER 3	5921.16	5921.17	5921.20	5921.23	5921.26	5921.29	5921.32	5921.35	5921.38	5921.41	5921.44	5921.47	5921.47
GIRDER 4	5921.00	5921.00	5921.03	5921.06	5921.09	5921.12	5921.15	5921.18	5921.21	5921.24	5921.27	5921.30	5921.31
E.O.D.	5920.94	5920.94	5920.97	5921.00	5921.03	5921.06	5921.09	5921.12	5921.15	5921.18	5921.21	5921.24	5921.25

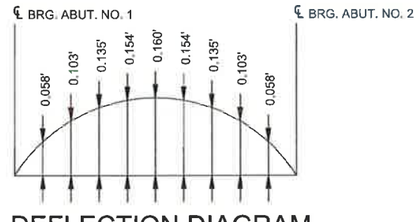

DEFLECTION DIAGRAM

NOTES

1. CONCRETE SHALL BE PLACED FULL WIDTH PER PHASE AT A FORWARD RATE OF PROGRESS NOT LESS THAN 30 FT. PER HOUR. SET RETARDANT SHALL NOT BE USED IF THE TEMPERATURE AT TIME OF PLACEMENT IS LESS THAN 60° F. PIER AND ABUTMENT DIAPHRAGMS SHALL BE PLACED MONOLITHICALLY WITH DECK POUR.

2. AN ALTERNATE POUR SEQUENCE MAY BE CONSIDERED AND IS SUBJECT TO APPROVAL BY THE BRIDGE ENGINEER.

3. TO COMPENSATE FOR DEAD LOAD DEFLECTION DUE TO WEIGHT OF SLAB AND COMPOSITE DEAD LOAD, SET SCREEDS ABOVE FINISHED GRADES BY DIMENSIONS SHOWN IN DEAD LOAD DEFLECTION DIAGRAM. THE DEFLECTIONS SHOWN ARE REFERENCED FROM ℄ OF BEARING AT ABUTMENTS. ELEVATION SHOTS SHALL BE ON TOP OF GIRDER. DECK PAN ELEVATIONS SHALL BE SUBMITTED FOR REVIEW BY THE BRIDGE ENGINEER BEFORE PLACEMENT.

KELLY R. HEATH
NEW MEXICO
18915
PROFESSIONAL ENGINEER

NAVAJO DIVISION OF TRANSPORTATION

TOP OF SLAB ELEVATIONS

Designed by: KRH	Date: 10/19	NAVAJO D.O.T
Drawn by: GMG	Date: 10/19	
Checked by: DDM	Date: 10/19	
File Name: DECK ELEVATIONS.DWG		

REGION	STATE	RESERVATION	ROUTE	PROJECT NO.	SHEET	TOTAL SHEETS
NORTH	NEW MEXICO	NAVAJO	N5012	N5012(1)1,2&4	31	75

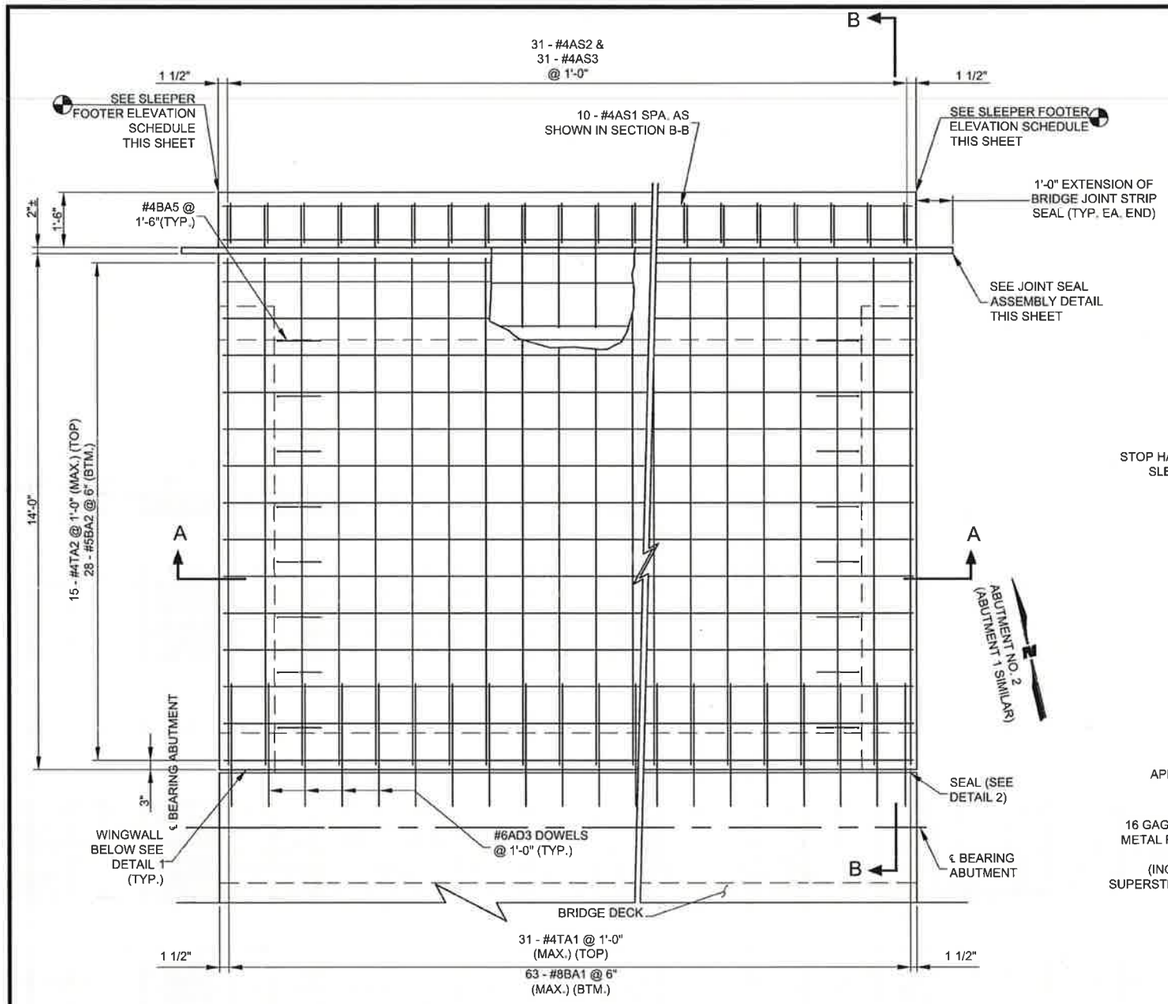

PLAN
(ABUTMENT NO. 2 SHOWN)

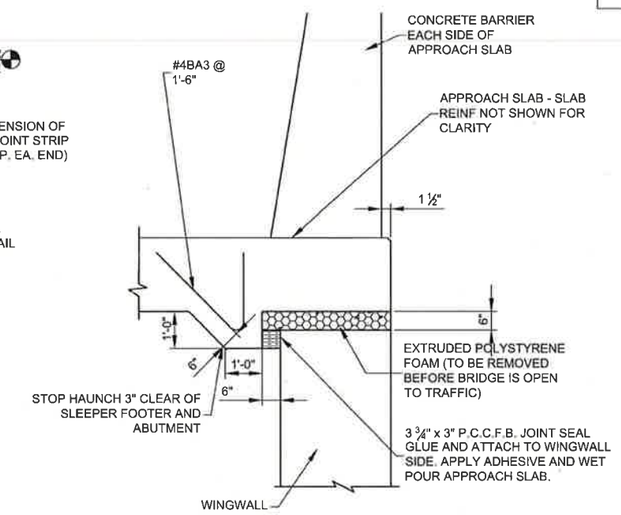

DETAIL 1

NOTES

1. CONCRETE FOR APPROACH SLABS AND SLEEPER FOOTERS SHALL BE STRUCTURAL CONCRETE CLASS A (AE) WITH A 28 DAY MINIMUM STRENGTH OF 4,000 P.S.I.
2. REINFORCING BARS ARE AASHTO SPECIFICATION M-31, GRADE 60. DIMENSIONS ARE TO THE CENTERLINE OF BARS. ALL BARS SHALL BE EPOXY COATED.
3. THE PREFORMED CLOSED CELL FOAM BRIDGE P.C.C.F.B. JOINT SEALS BETWEEN APPROACH SLAB AND DECK SLAB (SEE DETAIL 2) AND BETWEEN WINGWALL AND APPROACH SLAB (SEE DETAIL 1) SHALL BE CONSIDERED INCIDENTAL AND INCLUDED IN THE PRICE BID FOR ITEMS STRUCTURAL CONCRETE, CLASS A (AE).
4. TOP SURFACES OF THE APPROACH SLABS SHALL BE MACHINE GROOVED IN CONFORMANCE WITH SUBSECTION 552.14 OF THE FP-14 STANDARD SPECIFICATIONS.
5. TOP SURFACES OF ROADWAY SHALL MATCH APPROACH SLAB FINISHED GRADE.

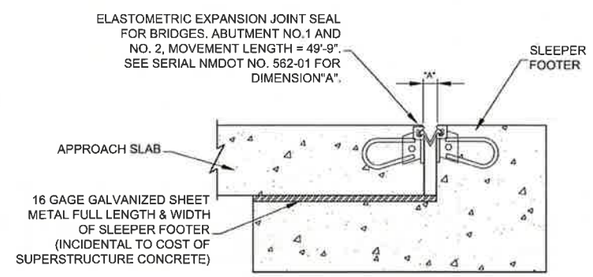

JOINT SEAL ASSEMBLY DETAIL

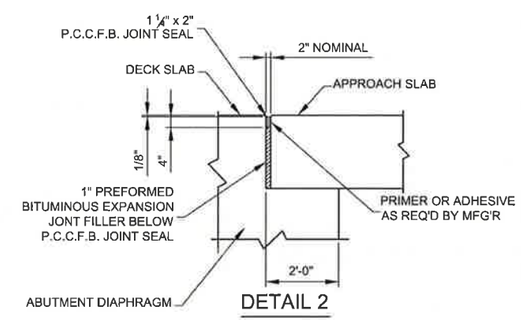

DETAIL 2

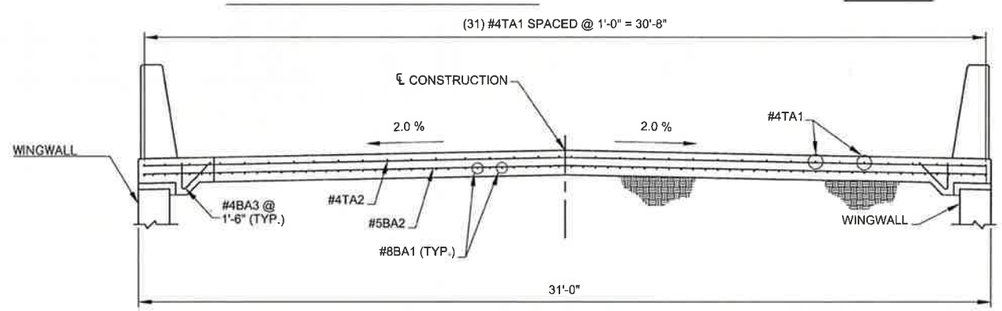

SECTION A-A

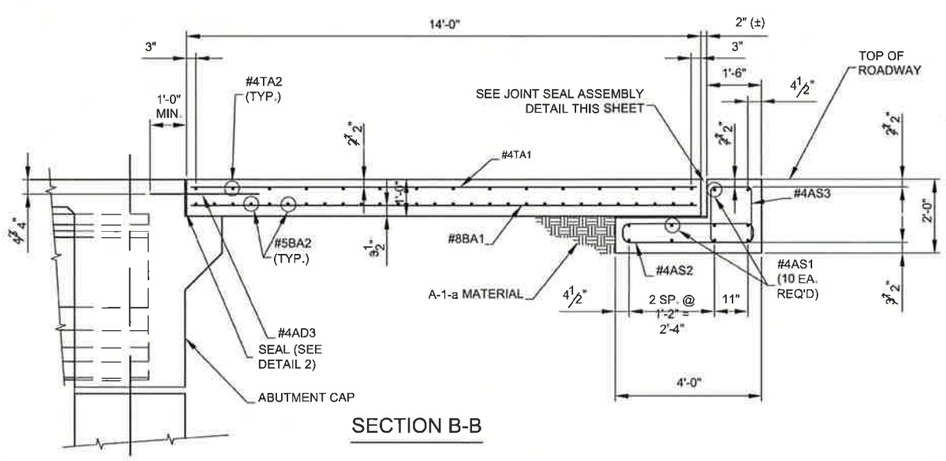

SECTION B-B

SLEEPER FOOTER ELEVATIONS

LOCATION	WEST	EAST
ABUT. NO. 1 STA. 45+06.38	5920.90	5920.90
ABUT. NO. 2 STA. 46+40.72	5921.29	5921.29

KELLY R. HEATH NEW MEXICO 18915 PROFESSIONAL ENGINEER

NAVAJO DIVISION OF TRANSPORTATION

APPROACH SLAB DETAILS

NAVAJO D.O.T

REGION	STATE	RESERVATION	ROUTE	PROJECT NO.	SHEET	TOTAL SHEETS
NORTH	NEW MEXICO	NAVAJO	N5012	N5012(1)1,2&4	32	75

DRILLED SHAFTS

BAR	TYPE	A	B	α	R	LENGTH	# REQ'D
#10ADS1	1	0	0	0	0	58'-0"	32
#10ADS2	1	0	0	0	0	53'-0"	32
#5AH5	2	0	0	0	10"	9'-4"	412
TOTAL NON-EPOXY-COATED							**476**

ABUTMENT CAPS

BAR	TYPE	A	B	α	R	LENGTH	# REQ'D
#4AC1	3	2'-6"	1'-11"		2"	6'-11"	42
#4AC2	1					30'-3"	16
#4AC3	1					30'-3"	12
#4AC4	3	3'-1"	1'-9"		2.5"	6'-6"	20
#4AC5	3	3'-6"	1'-9"		2.5"	7'-0"	16
#4AC6	7	4'-10"	2'-0"		2.5"	8'-9"	68
TOTAL NON-EPOXY-COATED							**174**

WINGWALLS

BAR	TYPE	A	B	α	R	LENGTH	# REQ'D
#9WH1	1					15'-6"	8
#9WH2	1					15'-6"	8
#9WH3	1					15'-3"	8
#9WH4	1					13'-7"	8
#9WH5	1					11'-10"	8
#9WH6	1					10'-1"	8
#9WH7	1					8'-4"	8
#9WH8	1					6'-7"	8
#9WH9	1					4'-10"	8
#9WH10	2	3'-2"	13'-10"	152°37'	4 1/2"	17'-0"	8
#9WH11	1					3'-0"	16
#9WH12	4	3'-0"	3'-0"		4 1/2"	6'-0"	40
#7WV1	1					1'-8"	8
#7WV2	1					2'-2"	8
#7WV3	1					2'-8"	8
#7WV4	1					3'-2"	8
#7WV5	1					3'-8"	8
#7WV6	1					4'-2"	8
#7WV7	1					4'-8"	8
#7WV8	1					5'-2"	8
#7WV9	1					5'-8"	8
#7WV10	1					6'-2"	8
#7WV11	1					6'-8"	8
#7WV12	1					7'-2"	8
#7WV13	1					7'-11"	8
#7WV14	1					9'-3"	32
TOTAL NON-EPOXY-COATED							**64**

ABUTMENT DIAPHRAGM

BAR	TYPE	A	B	α	R	LENGTH	# REQ'D
#4AD1	3	3'-8"	3'-11"		2"	11'-6"	232
#4AD2	5	2'-8"	9"	135°		5'-3"	58
#4AD3	6	3'-4"	9"		9"	4'-0"	58
#7AD4	1					30'-5"	8
#7AD5	1					30'-5"	16
#7AD6	1					1'-8"	12
#7AD7	1					6'-3"	12
#7AD8	1					2'-2"	12
#7AD9	1					7'-3"	12
#7AD10	1					1'-5"	16
#7AD11	1					5'-0"	16
#4AD12	3	3'-8"	1'-6"		2"	6'-8"	28
TOTAL EPOXY-COATED							**480**

BRIDGE DECK

BAR	TYPE	A	B	α	R	LENGTH	# REQ'D
#4TL1	1					34'-10"	59
#4TL2	1					68'-10"	59
#5TT1	1					30'-3"	206
#4BL1	1					34'-10"	60
#4BL2	1					68'-10"	60
#5BT1	1					30'-3"	207
TOTAL EPOXY-COATED							**651**

APPROACH SLABS

BAR	TYPE	A	B	α	R	LENGTH	# REQ'D
#4TA1	1					13'-6"	62
#4TA2	1					30'-6"	30
#8BA1	1					13'-6"	126
#5BA2	1					30'-6"	56
#4BA3	8	1'-1"	1'-6"		1"	2'-7"	32
#4AS1	1					30'-6"	20
#4AS2	9	3'-6"	6"			9'-0"	62
#4AS3	9	1'-0"	1'-6"			6'-0"	62
TOTAL EPOXY-COATED							**450**

BAR BENDING DIAGRAM

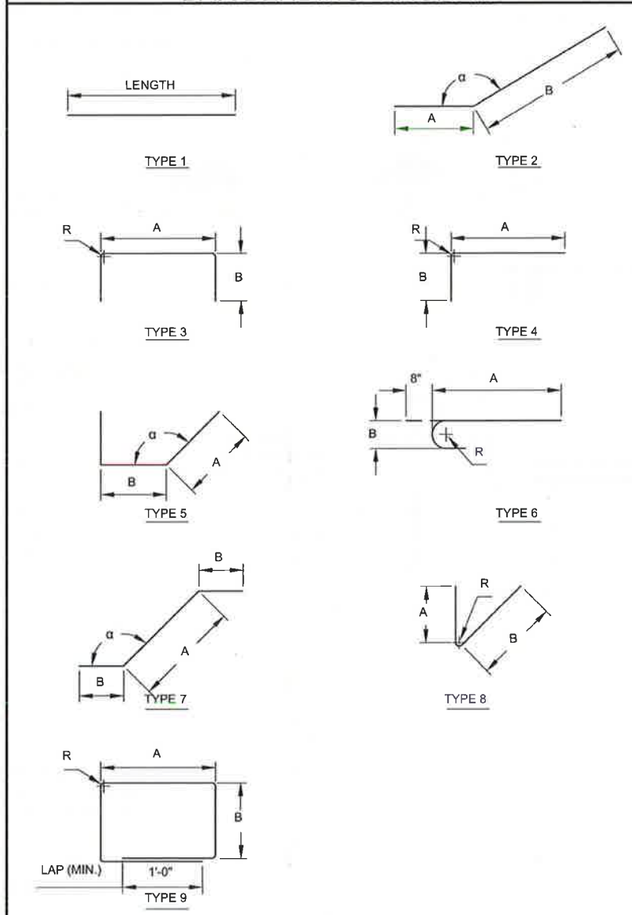

NOTES

1. DIMENSIONS ARE TO CENTER LINE OF BARS.

2. ALL REMARKS IN TABULAR INFORMATION ARE IN FEET, INCHES, AND DEGREES.

KELLY R. HEATH
NEW MEXICO
18915
PROFESSIONAL ENGINEER

NAVAJO DIVISION OF TRANSPORTATION

REBAR SCHEDULE

Designed by: KRH	Date: 10/19	NAVAJO D.O.T
Drawn by: GMG	Date: 10/19	
Checked by: DDM	Date: 10/19	
File Name: REBAR SCHEDULE.DWG		

REGION	STATE	RESERVATION	ROUTE	PROJECT NO.	SHEET	TOTAL SHEETS
NORTH	NEW MEXICO	NAVAJO	N5012	N5012(1)1,2&4	33	75

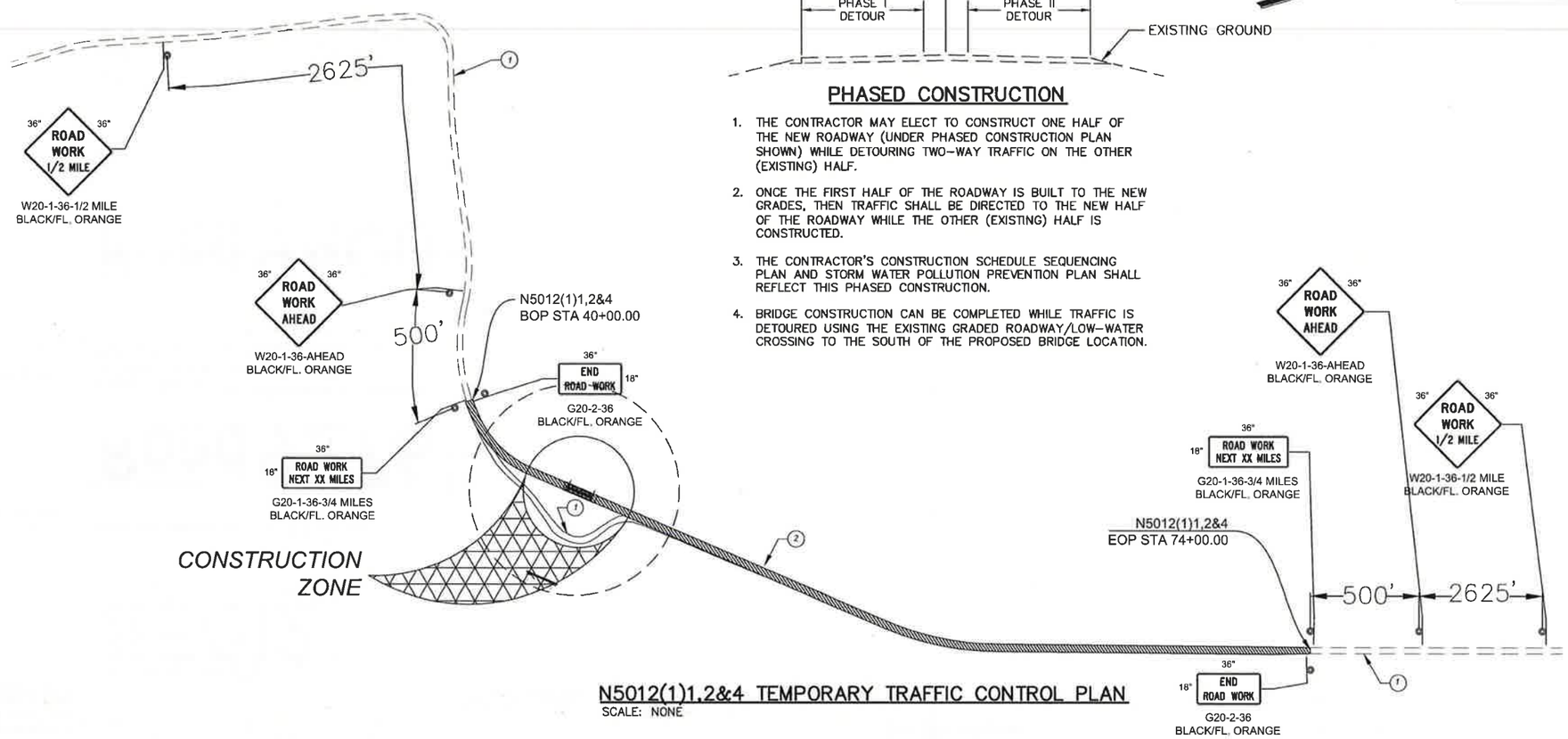

N5012(1)1,2&4 TEMPORARY TRAFFIC CONTROL PLAN
SCALE: NONE

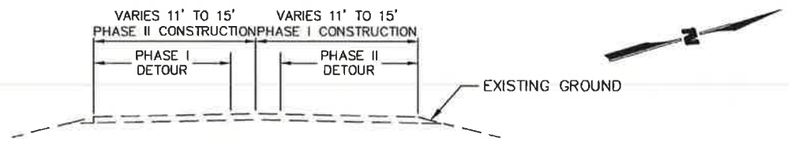

PHASED CONSTRUCTION

1. THE CONTRACTOR MAY ELECT TO CONSTRUCT ONE HALF OF THE NEW ROADWAY (UNDER PHASED CONSTRUCTION PLAN SHOWN) WHILE DETOURING TWO-WAY TRAFFIC ON THE OTHER (EXISTING) HALF.
2. ONCE THE FIRST HALF OF THE ROADWAY IS BUILT TO THE NEW GRADES, THEN TRAFFIC SHALL BE DIRECTED TO THE NEW HALF OF THE ROADWAY WHILE THE OTHER (EXISTING) HALF IS CONSTRUCTED.
3. THE CONTRACTOR'S CONSTRUCTION SCHEDULE SEQUENCING PLAN AND STORM WATER POLLUTION PREVENTION PLAN SHALL REFLECT THIS PHASED CONSTRUCTION.
4. BRIDGE CONSTRUCTION CAN BE COMPLETED WHILE TRAFFIC IS DETOURED USING THE EXISTING GRADED ROADWAY/LOW-WATER CROSSING TO THE SOUTH OF THE PROPOSED BRIDGE LOCATION.

GENERAL NOTES

1. SEE GENERAL NOTES 2 & 3 ON SHEET 2.

KEYED NOTES

1. EXISTING N5012 ROADWAY
2. PROPOSED N5012 ROADWAY

SIGN FACE DETAILS

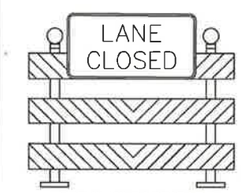

TYPE III (8') BARRICADE

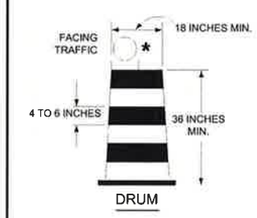

DRUM

TYPICAL SIGNING AND DRUM PLACEMENT FOR ONE-WAY FLAGGING OPERATION
SCALE: NONE

LEGEND

- TRAFFIC CONTROL SIGN
- DRUMS
- TYPE III BARRICADE
- WORK ZONE AREA

DEREK D. MEIER
NEW MEXICO
14504
LICENSED PROFESSIONAL ENGINEER
1/31/20

NAVAJO DIVISION OF TRANSPORTATION

TEMPORARY TRAFFIC CONTROL DETAIL

Designed by: MKC	Date: 7/19
Drawn by: ELO	Date: 7/19
Checked by: DDM	Date: 7/19
File Name: TRAFFIC CONTROL BASE.DWG	

NAVAJO D.O.T

M:\TRN\17-100-090-10\2_DISCIPLINES_SHEETS\3_SHEETS - ROADWAY\TRAFFIC CONTROL BASE.DWG 1/31/2020 10:15 AM

REGION	STATE	RESERVATION	ROUTE	PROJECT NO.	SHEET	TOTAL SHEETS
NORTH	NEW MEXICO	NAVAJO	N5012	N5012(1)1,2&4	34	75

SIGN FACE DETAILS

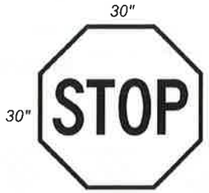

R1-1-30
WHITE/RED

R2-1-24-35MPH
BLACK/WHITE

W1-2R-30
BLACK/FL. YELLOW

W1-2L-30
BLACK/FL. YELLOW

W2-2R-30
BLACK/FL. YELLOW

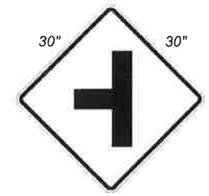

W2-2L-30
BLACK/FL. YELLOW

W8-3-30
BLACK/FL. YELLOW

R4-1-18
BLACK/WHITE

W14-3-40
BLACK/FL. YELLOW

W1-8R-18
BLACK/FL. YELLOW

W1-8L-18
BLACK/FL. YELLOW

W8-13-30
BLACK/FL. YELLOW

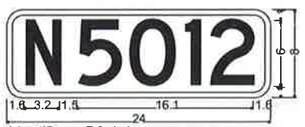

Identifier : D3-1-1;
1.5" Radius, 0.5" Border, White on Green;
[N] C 50% spacing; [5012] D 60% spacing;

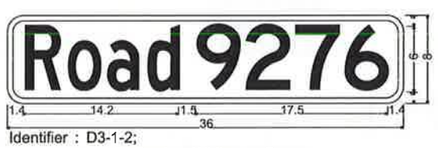

Identifier : D3-1-2;
1.5" Radius, 0.5" Border, White on Green;
[Road] C 50% spacing; [9276] D 40% spacing;

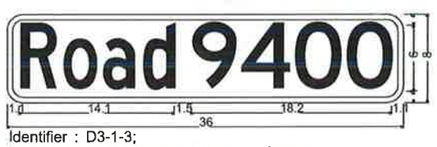

Identifier : D3-1-3;
1.5" Radius, 0.5" Border, White on Green;
[Road] C 50% spacing; [9400] D 40% spacing;

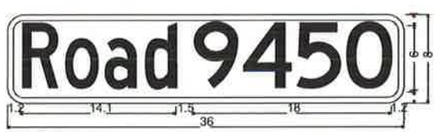

Identifier : D3-1-4;
1.5" Radius, 0.5" Border, White on Green;
[Road] C 50% spacing; [9450] D 40% spacing;

GENERAL NOTES

1. ALL NEW SIGNING AND STRIPING SHALL COMPLY WITH THE FHWA AND 2009 MUTCD RETROREFLECTIVITY STANDARDS.
2. SEE STANDARD DRAWINGS FOR SIGNING AND OBJECT MARKER DETAILS.

DEREK D. MEIER
NEW MEXICO
14504
LICENSED PROFESSIONAL ENGINEER
1/31/20

NAVAJO DIVISION OF TRANSPORTATION

PERMANENT SIGNING AND STRIPING

Designed by: MKC	Date: 7/19	NAVAJO D.O.T
Drawn by: FLO	Date: 7/19	
Checked by: DDM	Date: 7/19	
File Name: PERM_SGN-STRP-BASE.DWG		

M:\TRN\17-100-090-10\2_DISCIPLINES_SHEETS\3_SHEETS - ROADWAY\PERM_SGN-STRIP-BASE.DWG 1/30/2020 4:45 PM

REGION	STATE	RESERVATION	ROUTE	PROJECT NO.	SHEET	TOTAL SHEETS
NORTH	NEW MEXICO	NAVAJO	N5012	N5012(1)1,2&4	35	75

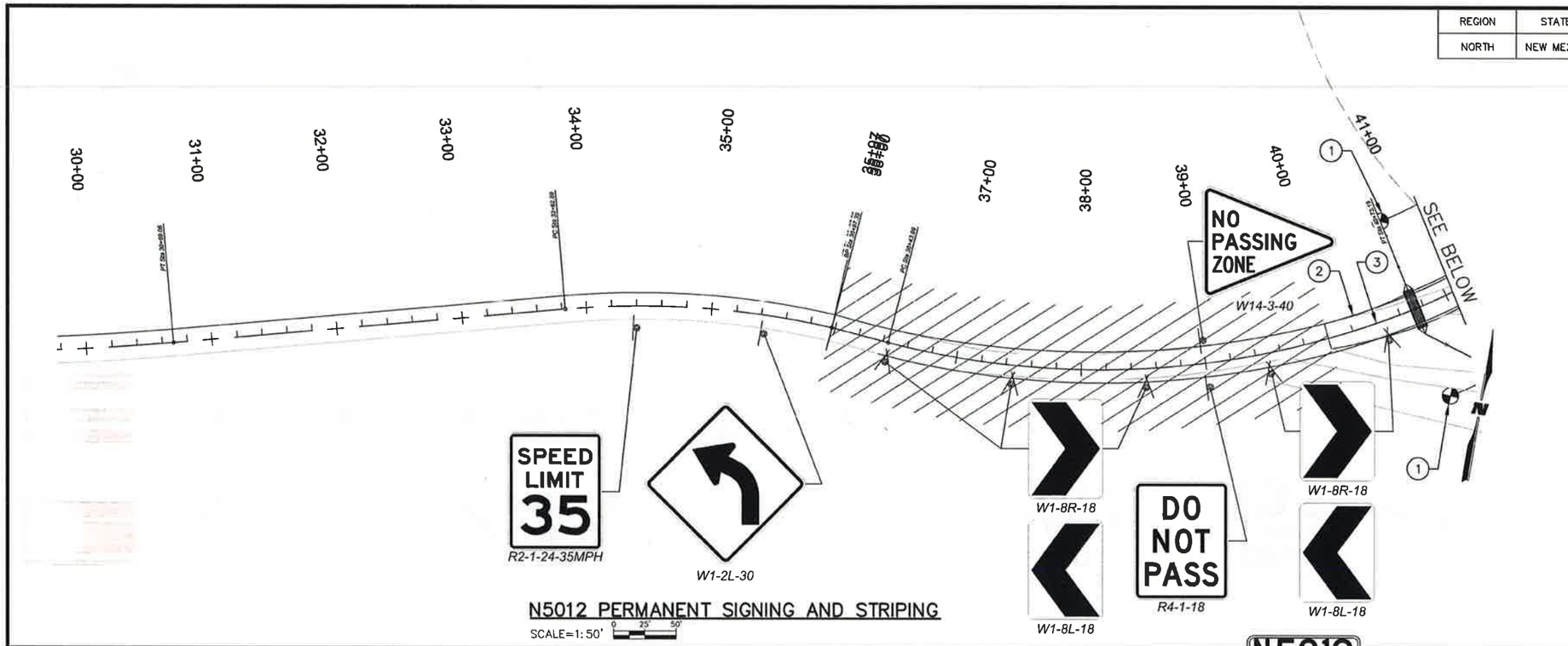

N5012 PERMANENT SIGNING AND STRIPING

SCALE=1:50' 0 25' 50'

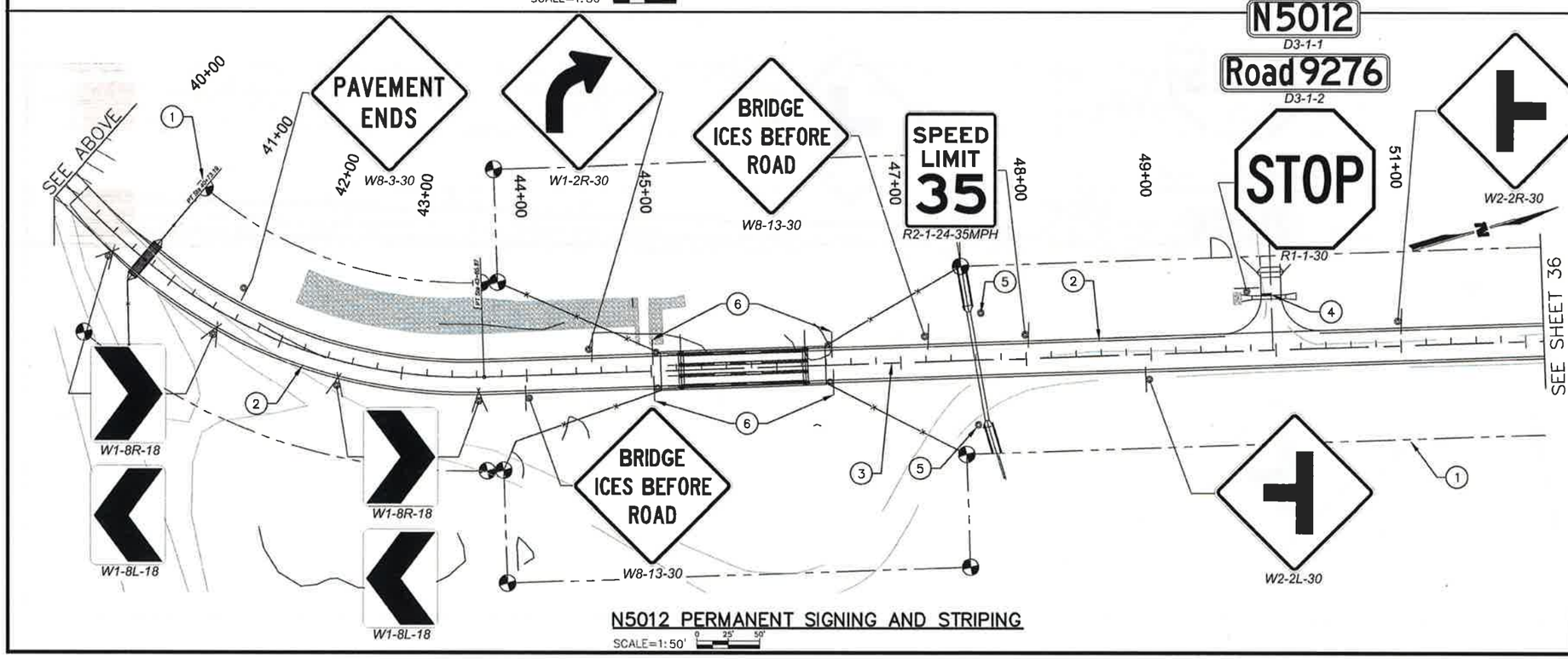

N5012 PERMANENT SIGNING AND STRIPING

SCALE=1:50' 0 25' 50'

GENERAL NOTES

1. ALL NEW SIGNING AND STRIPING SHALL COMPLY WITH THE FHWA AND 2009 MUTCD RETROREFLECTIVITY STANDARDS.

KEYED NOTES

1. EXISTING ROW
2. PAVEMENT MARKING–4" SOLID SINGLE WHITE
3. PAVEMENT MARKING–4" SOLID DOUBLE YELLOW
4. PAVEMENT MARKING–24" SOLID SINGLE WHITE
5. TYPE II OBJECT MARKER
6. TYPE III OBJECT MARKER

DEREK D. MEIER
NEW MEXICO
14504
LICENSED PROFESSIONAL ENGINEER
1/31/20

NAVAJO DIVISION OF TRANSPORTATION

PERMANENT SIGNING AND STRIPING

Designed by: MKC	Date: 7/19		
Drawn by: ELO	Date: 7/19		
Checked by: DDM	Date: 7/19		
File Name: PERM_SGN-STRIP-BASE.DWG			

NAVAJO D.O.T

M:\TRN\17-100-090-10\2_DISCIPLINES_SHEETS\3_SHEETS - ROADWAY\PERM_SGN-STRIP-BASE.DWG 1/30/2020
4:46 PM

REGION	STATE	RESERVATION	ROUTE	PROJECT NO.	SHEET	TOTAL SHEETS
NORTH	NEW MEXICO	NAVAJO	N5012	N5012(1)1,2&4	36	75

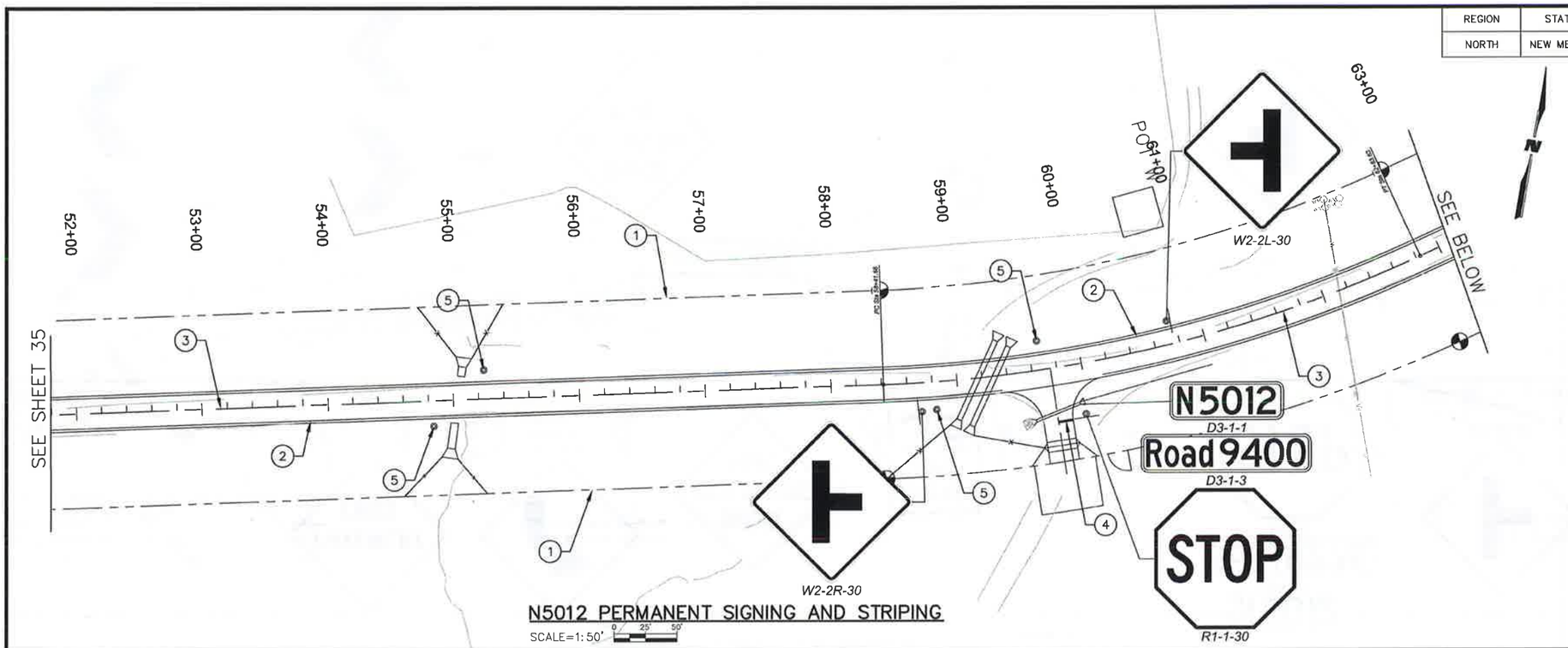

N5012 PERMANENT SIGNING AND STRIPING

SCALE=1:50' 0 25' 50'

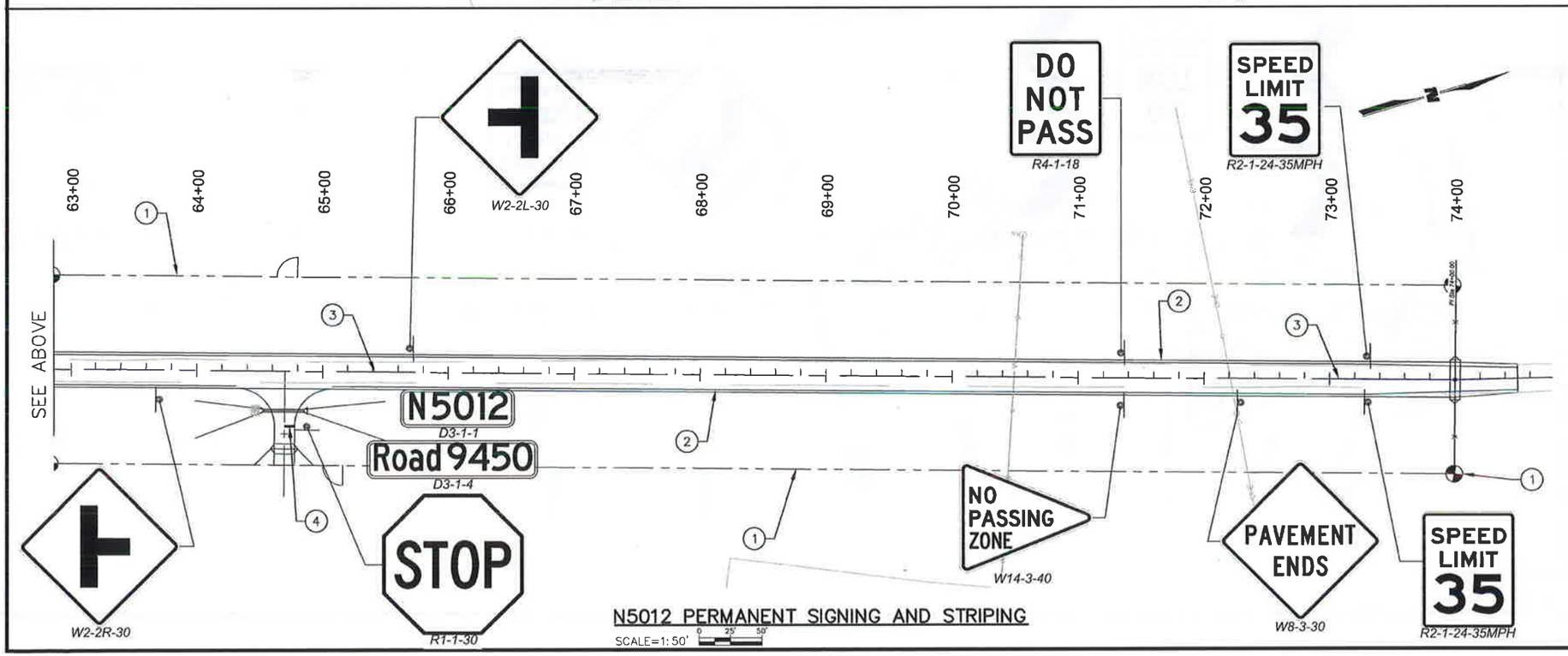

N5012 PERMANENT SIGNING AND STRIPING

SCALE=1:50' 0 25' 50'

GENERAL NOTES

1. ALL NEW SIGNING AND STRIPING SHALL COMPLY WITH THE FHWA AND 2009 MUTCD RETROREFLECTIVITY STANDARDS.

KEYED NOTES

1. EXISTING ROW
2. PAVEMENT MARKING–4" SOLID SINGLE WHITE
3. PAVEMENT MARKING–4" SOLID DOUBLE YELLOW
4. PAVEMENT MARKING–24" SOLID SINGLE WHITE
5. TYPE II OBJECT MARKER

DEREK D. MEIER NEW MEXICO 14504 LICENSED PROFESSIONAL ENGINEER 1/31/20

NAVAJO DIVISION OF TRANSPORTATION

PERMANENT SIGNING AND STRIPING

Designed by: MHC	Date: 7/19		
Drawn by: ELO	Date: 7/19		
Checked by: DDM	Date: 7/19		
File Name: N5012-SIGN-BASE.DWG			

NAVAJO D.O.T

M:\TPN\17-100-090-10\2_DISCIPLINES_SHEETS\3_SHEETS - ROADWAY\PERM_SGN-STRIP-BASE.DWG 1/30/2020 4:46 PM

REGION	STATE	RESERVATION	ROUTE	PROJECT NO.	SHEET	TOTAL SHEETS
NORTH	NEW MEXICO	NAVAJO	N5012	N5012(1)1,2&4	37	75

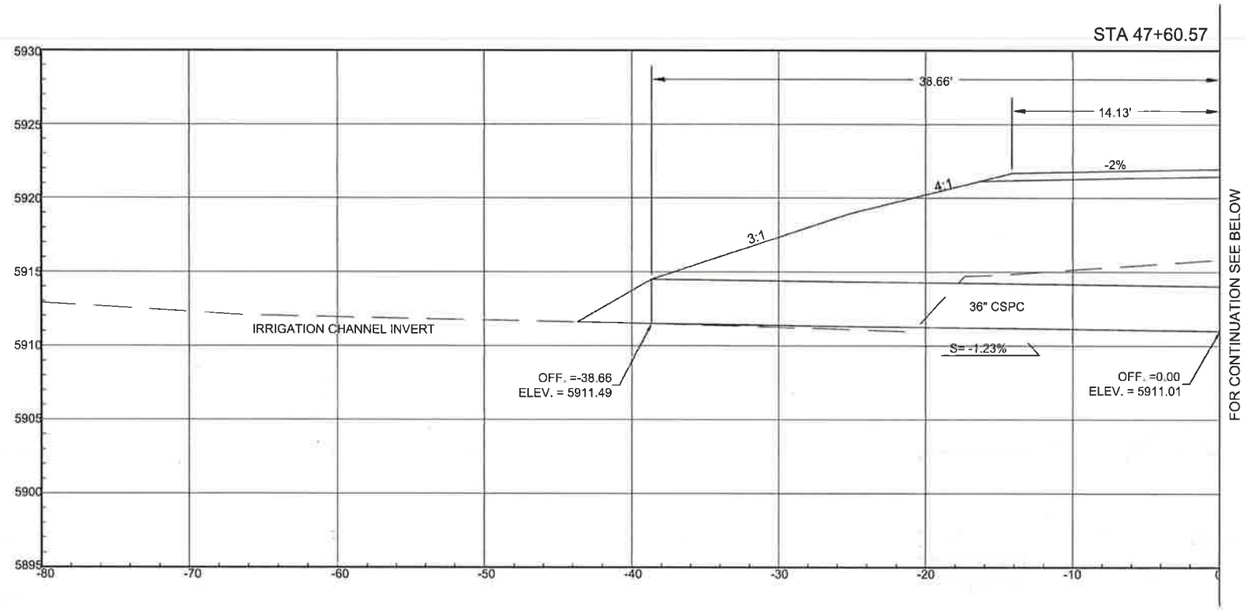

DS-01 STA 47+60.57
EXISTING 36" CMP TO BE REMOVED;
BUILD 1-36"x88' CSPC, SKEW @ 8° RT. FWD.;
BUILD METAL END SECTIONS LT. & RT.

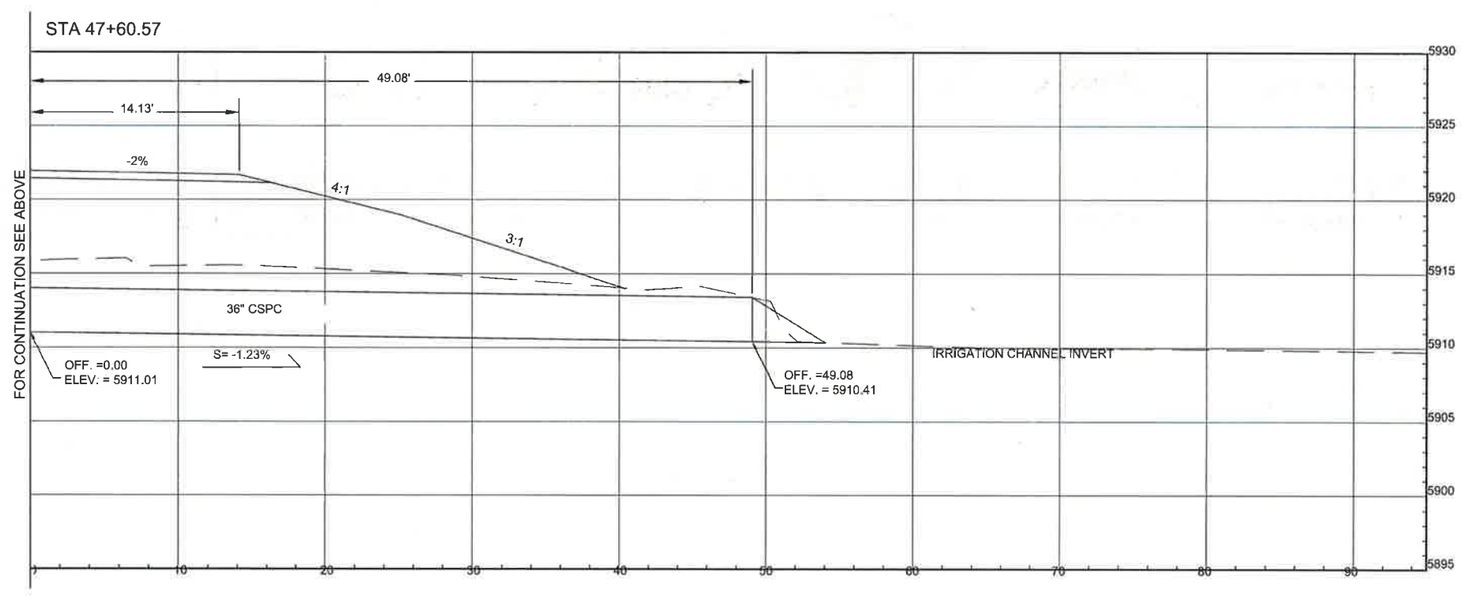

DEREK D. MELER
NEW MEXICO
14504
LICENSED PROFESSIONAL ENGINEER
1/31/20

NAVAJO DIVISION OF TRANSPORTATION

STRUCTURE PLACEMENTS

Designed by: NHC	Date: 7/19
Drawn by: ELO	Date: 7/19
Checked by: DDM	Date: 7/19
File Name: [illegible]	

NAVAJO D.O.T

M:\TRN\17-100-090-10\2_DISCIPLINES_REFERENCES\PIPE BASE.DWG 1/30/2020 4:58 PM

REGION	STATE	RESERVATION	ROUTE	PROJECT NO.	SHEET	TOTAL SHEETS
NORTH	NEW MEXICO	NAVAJO	N5012	N5012(1)1,2&4	38	75

STA 59+23.75

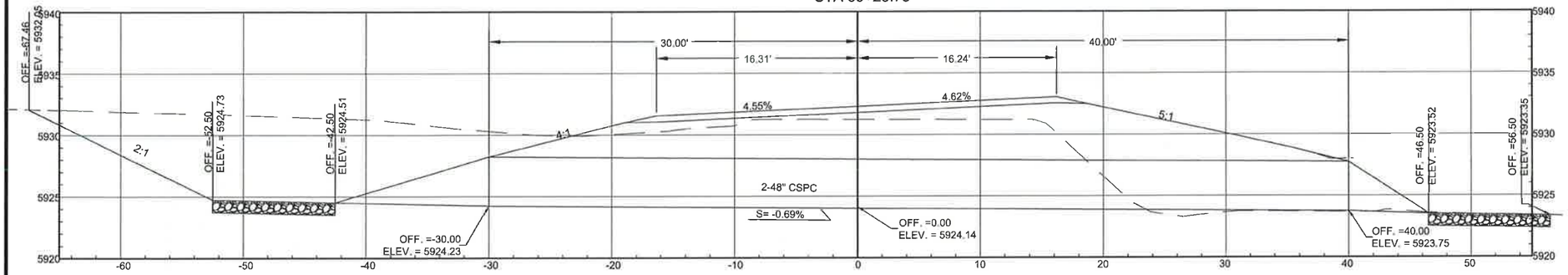

GRADE INLET DITCH NORTH TO
STA 60+50.00 TO MATCH 30' WIDE
INV:5929.94 ROADSIDE CHANNEL SECTION
SEE SHT 7 FOR MORE INFORMATION
SLOPE = +5.12%.

DS-03
STA 59+23.75
EXISTING 2-24"X40' CMP'S TO BE REMOVED
BUILD 2-48"x70' CSCP'S SKEWED @ 30° LT FWD;
BUILD METAL END SECTIONS WITH SAFETY BARS LT PER STD 602-9 (SHEET 62)
BUILD METAL END SECTIONS RT
BUILD RIP RAP CLASS A EROSION CONTROL PADS LT & RT

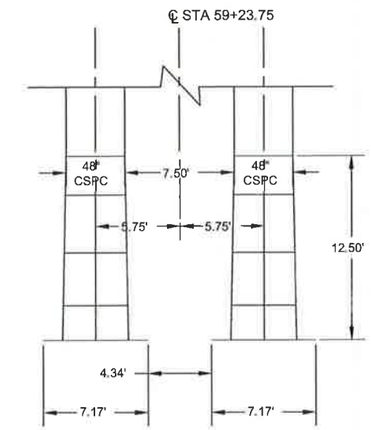

STRUCTURE PLACEMENT DETAIL
METAL END SECTIONS W/SAFETY BARS LT.

STA 55+03.75

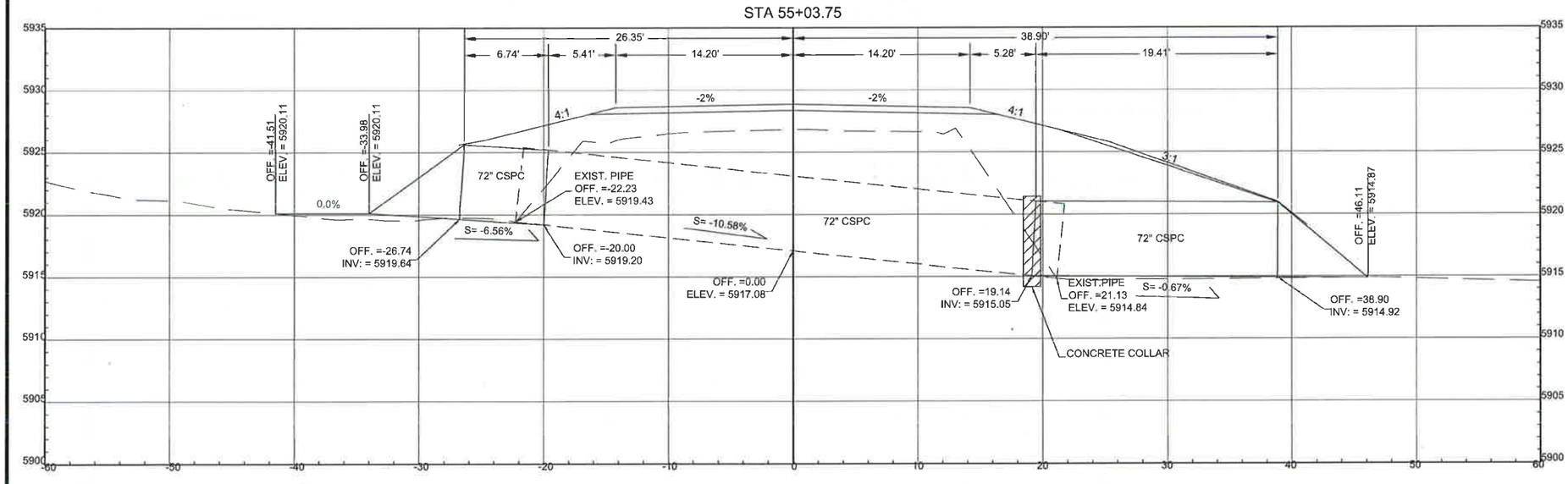

DS-02
STA 55+03.57
EXISTING 72" CSPC SKEWED @ 10° LT FWD;
SAWCUT & REMOVE 2 LF OF CSPC LT & RT
CONNECT TO EXISTING 72" CSPC LT & RT AND PROVIDE CONCRETE COLLAR AT 19.5' RT
EXTEND LT w/72"x6.74' CSPC SKEWED @ 10° LT FWD;
EXTEND RT w/72"x19.41' CSPC SKEWED @ 10° LT FWD;
BUILD METAL END SECTIONS LT & RT

DEREK D. MEIER
NEW MEXICO
14504
LICENSED PROFESSIONAL ENGINEER
1/31/20

NAVAJO DIVISION OF TRANSPORTATION

STRUCTURE PLACEMENTS

Designed by: N+C	Date: 7/19	NAVAJO D.O.T
Drawn by: ELO	Date: 7/19	
Checked by: DDM	Date: 7/19	
File Name:		

M:\TRN\17-100-090-10\2_DISCIPLINES_REFERENCES\PIPE BASE.DWG 1/30/2020 4:58 PM

REGION	STATE	RESERVATION	ROUTE	PROJECT NO.	SHEET	TOTAL SHEETS
NORTH	NEW MEXICO	NAVAJO	N5012	N5012(1)1,2&4	39	75

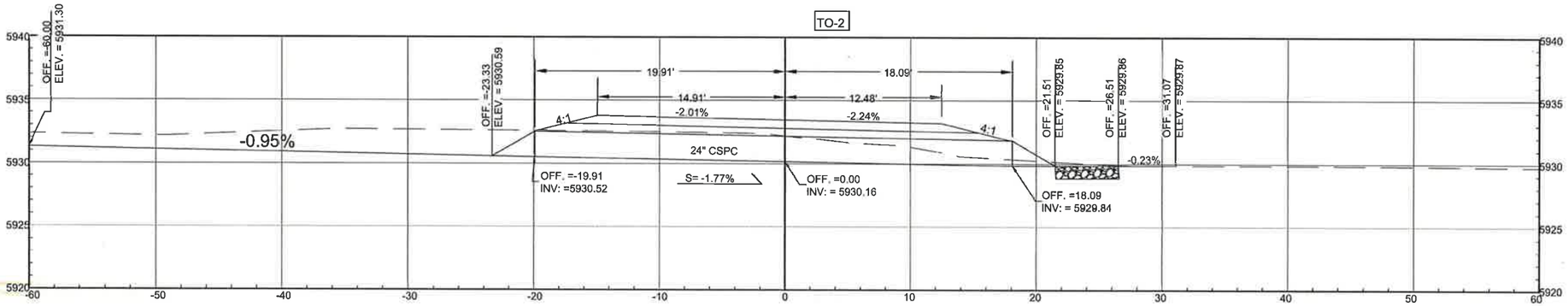

GRADE INLET DITCH NORTH TO
STA 60+50.00 TO MATCH 30' WIDE
INV:5931.57 ROADSIDE CHANNEL SECTION
SEE SHT 7 FOR MORE INFORMATION
SLOPE = +0.95%.

TDS-02
N5012 STA 59+74.99-35.55' RT
BUILD 1-24"x38' CSCP'S SKEWED @ 13° RT. FWD. ;
BUILD METAL END SECTIONS LT & RT
BUILD RIP RAP CLASS A EROSION CONTROL PAD RT

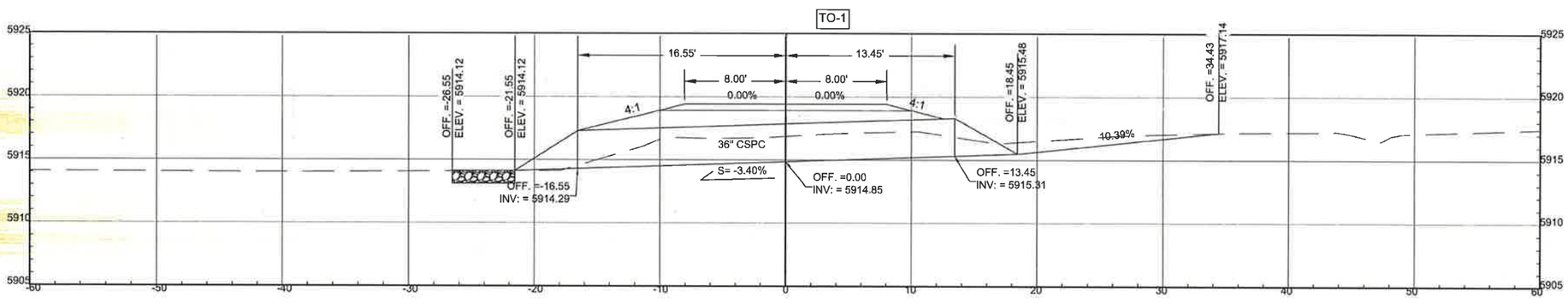

TDS-01
N5012 STA 49+97.47-42.00' LT
BUILD 1-36"x30' CSCP'S NORMAL IN PLACE;
BUILD METAL END SECTIONS LT & RT
BUILD RIP RAP CLASS A EROSION CONTROL PAD LT

M:\TRN\17-100-090-10\2_DISCIPLINES_REFERENCES\PIPE BASE.DWG 1/30/2020 4:58 PM

DEREK D. MEYER
NEW MEXICO
14504
LICENSED PROFESSIONAL ENGINEER
1/31/20

NAVAJO DIVISION OF TRANSPORTATION

STRUCTURE PLACEMENTS

Designed by: MKC	Date: 7/19
Drawn by: ELO	Date: 7/19
Checked by: DDM	Date: 7/19
File Name: PIPE BASE.DWG	

NAVAJO D.O.T

REGION	STATE	RESERVATION	ROUTE	PROJECT NO.	SHEET	TOTAL SHEETS
NORTH	NEW MEXICO	NAVAJO	N5012	N5012(1)1,2&4	40	75

TO-3

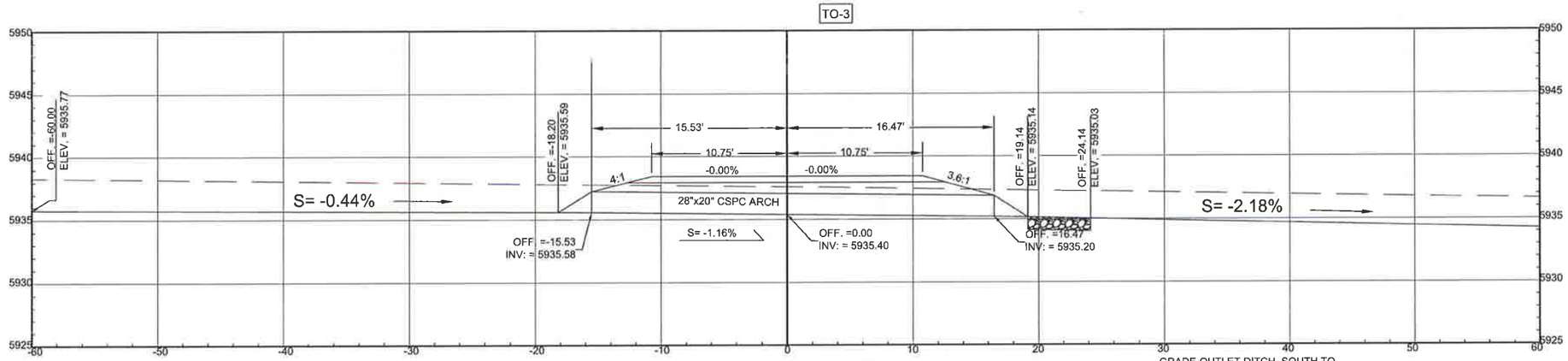

GRADE INLET DITCH NORTH TO
STA 65+50.00 TO MATCH 30' WIDE
INV:5935.86 ROADSIDE CHANNEL SECTION
SEE SHT 7 FOR MORE INFORMATION
SLOPE = +0.44%.

TDS-03

N5012 STA 64+70.00-31.44' RT
BUILD 1-28"x20"x32' ARCH CSCP NORMAL IN PLACE;
BUILD METAL END SECTIONS LT & RT
BUILD RIP RAP CLASS A EROSION CONTROL PAD RT

GRADE OUTLET DITCH SOUTH TO
STA 64+00.00 TO MATCH 30' WIDE
INV:5934.01 ROADSIDE CHANNEL SECTION
SEE SHT 7 FOR MORE INFORMATION
SLOPE = -2.18%.

DEREK D. MEIER
NEW MEXICO
14504
LICENSED PROFESSIONAL ENGINEER
1/31/20

NAVAJO DIVISION OF TRANSPORTATION

STRUCTURE PLACEMENTS

Designed by: NKC	Date: 7/19
Drawn by: ELD	Date: 7/19
Checked by: DDM	Date: 7/19
File Name:	

NAVAJO D.O.T

M:\TRN\17-100-090-10\2_DISCIPLINES_REFERENCES\PIPE BASE.DWG 1/30/2020 4:58 PM

REGION	STATE	RESERVATION	ROUTE	PROJECT NO.	SHEET	TOTAL SHEETS
NORTH	NEW MEXICO	NAVAJO	N5012	N5012(1)1,2&4	41	75

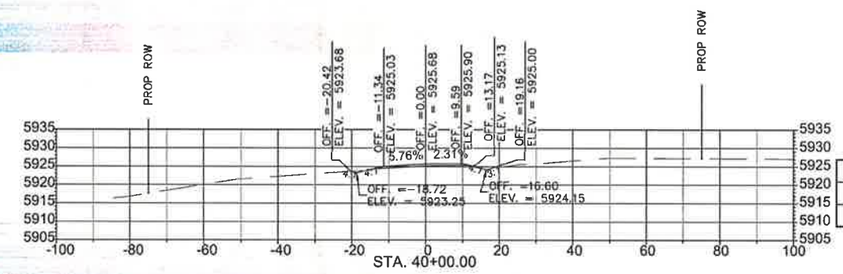

Total Volume at Station 40+00.00	
Cut Area	18.204
Fill Area	1.391

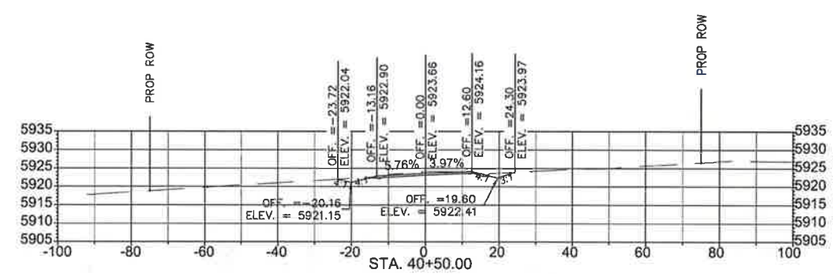

Total Volume at Station 40+50.00	
Cut Area	28.531
Fill Area	1.643

M:\TRN\17-100-090-10\2_DISCIPLINES_REFERENCES\N5012 X SECT.DWG 1/30/2020 4:59 PM

DEREK D. MEIER
NEW MEXICO
14504
LICENSED PROFESSIONAL ENGINEER
1/31/20

NAVAJO DIVISION OF TRANSPORTATION

CROSS SECTIONS

Designed by: MKC	Date: /19	NAVAJO D.O.T
Drawn by: ELO	Date: /19	
Checked by: DDM	Date: /19	
File Name: N5012 X SECT.DWG		

REGION	STATE	RESERVATION	ROUTE	PROJECT NO.	SHEET	TOTAL SHEETS
NORTH	NEW MEXICO	NAVAJO	N5012	N5012(1)1,2&4	42	75

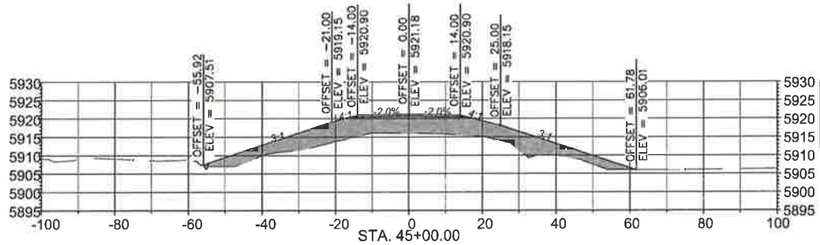

Total Volume at Station 45+00.00	
Cut Area	0.00
Fill Area	51.07

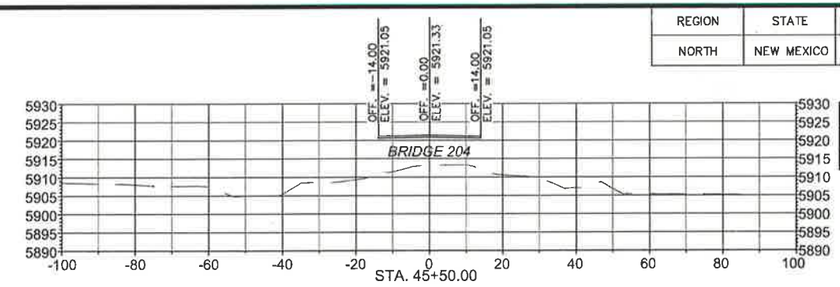

Total Volume at Station 45+50.00	
Cut Area	0.00
Fill Area	0.00

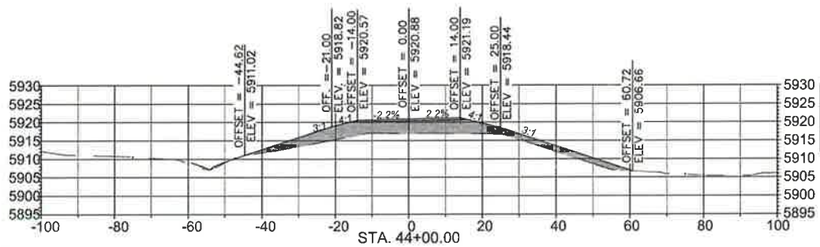

Total Volume at Station 44+00.00	
Cut Area	0.00
Fill Area	250.07

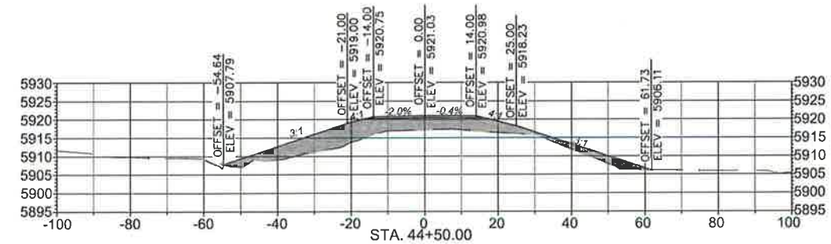

Total Volume at Station 44+50.00	
Cut Area	0.00
Fill Area	341.15

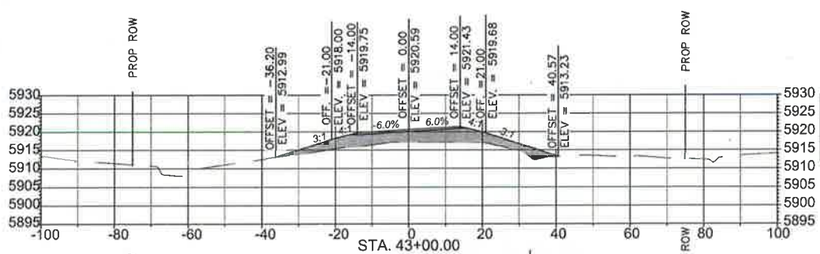

Total Volume at Station 43+00.00	
Cut Area	0.00
Fill Area	194.58

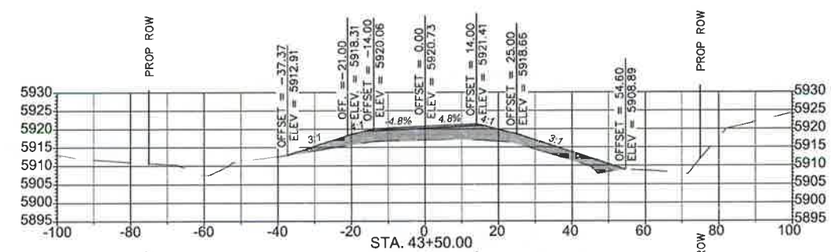

Total Volume at Station 43+50.00	
Cut Area	0.00
Fill Area	236.40

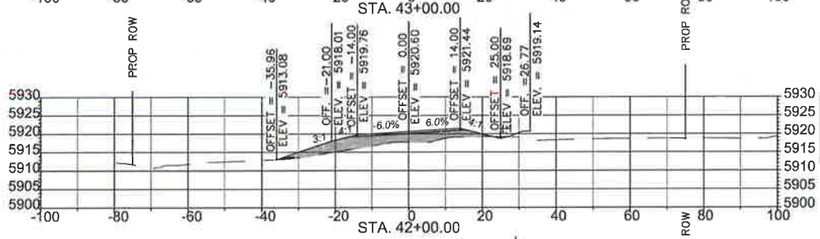

Total Volume at Station 42+00.00	
Cut Area	0.90
Fill Area	124.81

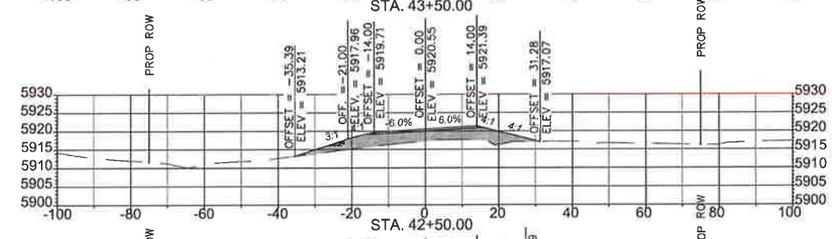

Total Volume at Station 42+50.00	
Cut Area	0.00
Fill Area	163.38

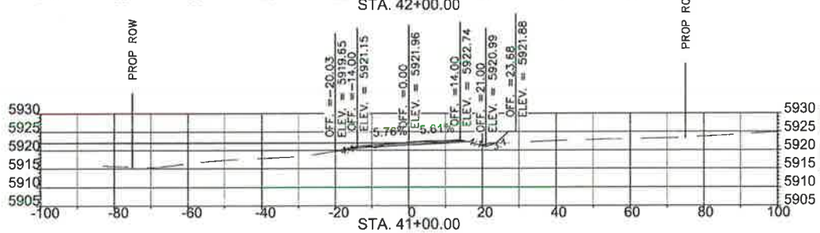

Total Volume at Station 41+00.00	
Cut Area	16.43
Fill Area	1.624

Total Volume at Station 41+50.00	
Cut Area	1.85
Fill Area	33.85

DEREK D. MEIER
NEW MEXICO
14504
LICENSED PROFESSIONAL ENGINEER
1/31/20

NAVAJO DIVISION OF TRANSPORTATION

CROSS SECTIONS

Designed by: VRC	Date: 7/19	
Drawn by: LLO	Date: 7/19	
Checked by: DDM	Date: 7/19	
File Name: N5012 X SECT.DWG		

NAVAJO D.O.T

M:\TRN\17-100-090-10\2_DISCIPLINES_REFERENCES\N5012 X SECT.DWG 1/30/2020 4:59 PM

REGION	STATE	RESERVATION	ROUTE	PROJECT NO.	SHEET	TOTAL SHEETS
NORTH	NEW MEXICO	NAVAJO	N5012	N5012(1)1,2&4	43	75

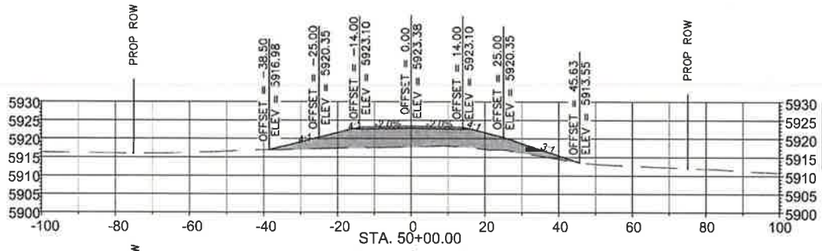

Total Volume at Station 50+00.00	
Cut Area	0.00
Fill Area	289.48

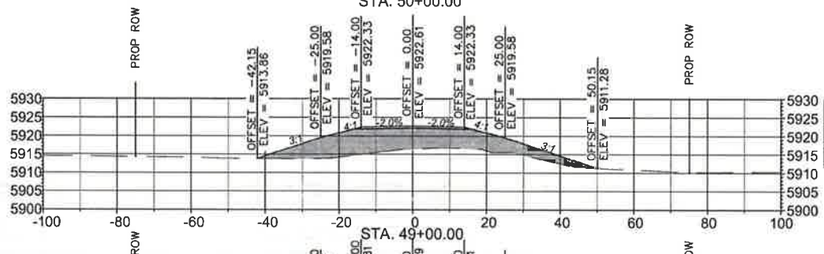

Total Volume at Station 49+00.00	
Cut Area	0.00
Fill Area	391.94

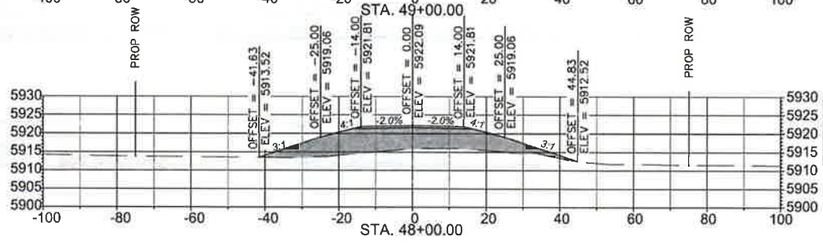

Total Volume at Station 48+00.00	
Cut Area	0.00
Fill Area	366.54

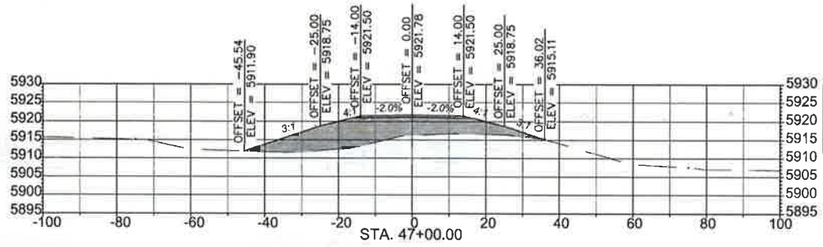

Total Volume at Station 47+00.00	
Cut Area	0.00
Fill Area	357.78

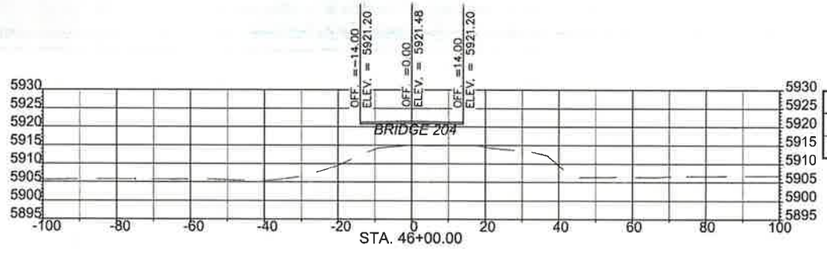

Total Volume at Station 46+00.00	
Cut Area	0.00
Fill Area	0.00

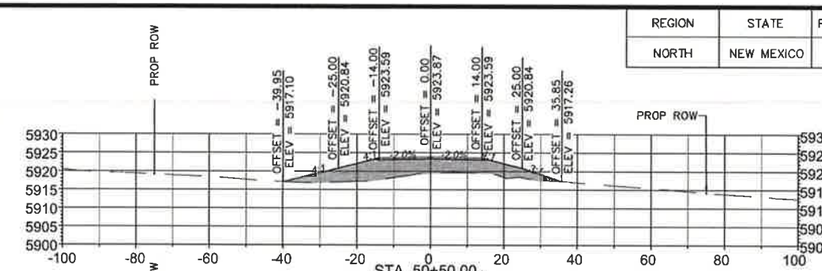

Total Volume at Station 50+50.00	
Cut Area	0.00
Fill Area	251.82

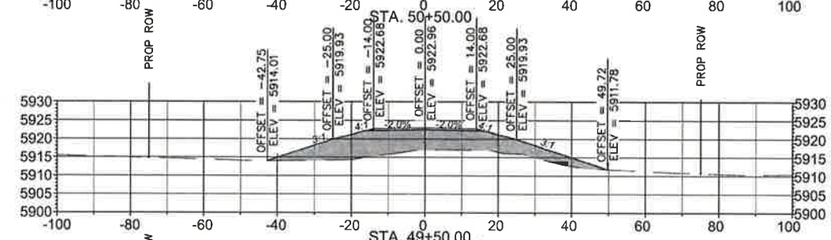

Total Volume at Station 49+50.00	
Cut Area	0.00
Fill Area	393.33

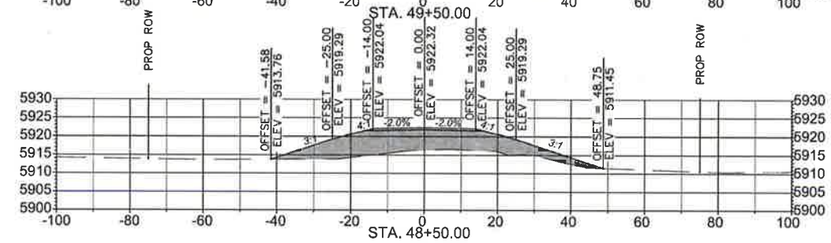

Total Volume at Station 48+50.00	
Cut Area	0.00
Fill Area	372.48

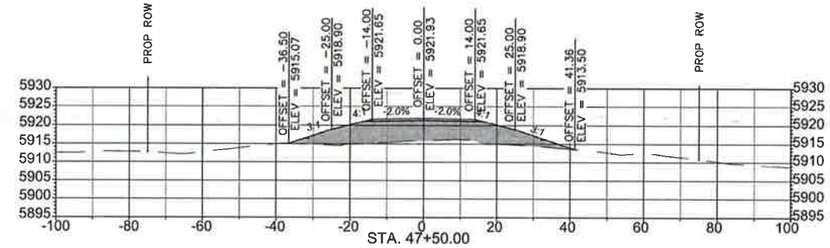

Total Volume at Station 47+50.00	
Cut Area	0.00
Fill Area	326.51

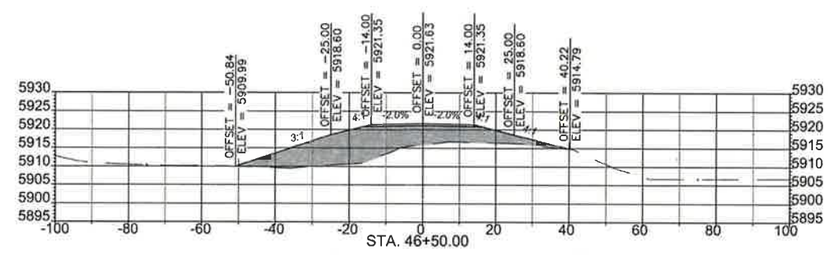

Total Volume at Station 46+50.00	
Cut Area	0.00
Fill Area	427.12

DEREK D. MEIER
NEW MEXICO
14504
LICENSED PROFESSIONAL ENGINEER
1/31/20

NAVAJO DIVISION OF TRANSPORTATION

CROSS SECTIONS

Designed by: MKC	Date: 7/19		
Drawn by: ELO	Date: 7/19		
Checked by: DDM	Date: 7/19		
File Name: N5012 X SECTIONS			

NAVAJO D.O.T

M:\TRN\17-100-090-10\2_DISCIPLINES_REFERENCES\N5012 X SECT.DWG 1/30/2020 4:59 PM

REGION	STATE	RESERVATION	ROUTE	PROJECT NO.	SHEET	TOTAL SHEETS
NORTH	NEW MEXICO	NAVAJO	N5012	N5012(1)1,2&4	44	75

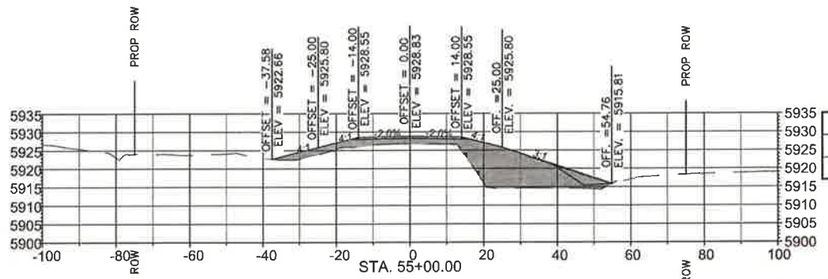

Total Volume at Station 55+00.00	
Cut Area	0.00
Fill Area	342.70

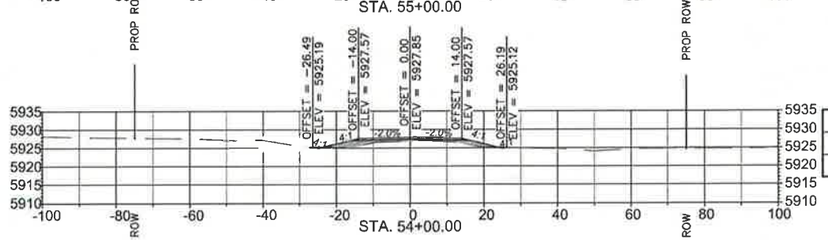

Total Volume at Station 54+00.00	
Cut Area	0.93
Fill Area	36.30

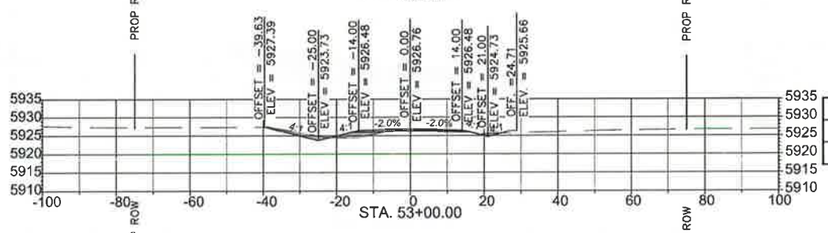

Total Volume at Station 53+00.00	
Cut Area	19.35
Fill Area	12.88

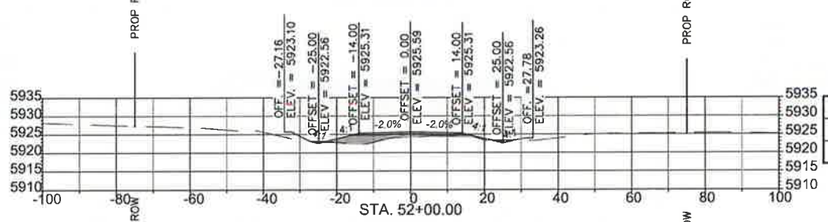

Total Volume at Station 52+00.00	
Cut Area	3.02
Fill Area	43.10

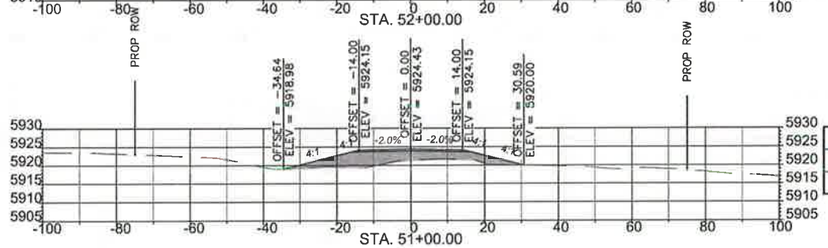

Total Volume at Station 51+00.00	
Cut Area	0.00
Fill Area	149.36

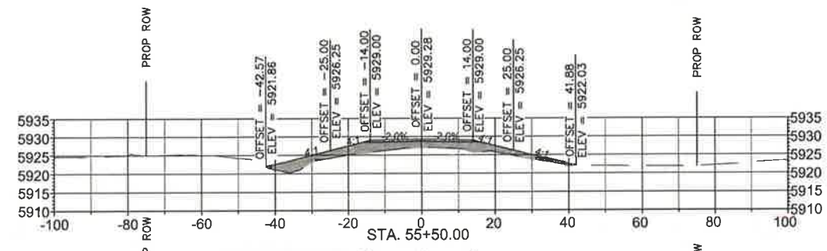

Total Volume at Station 55+50.00	
Cut Area	0.00
Fill Area	159.07

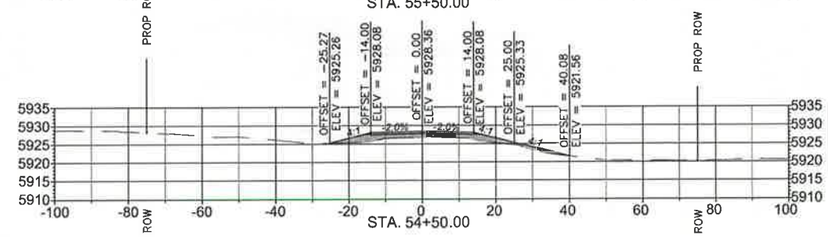

Total Volume at Station 54+50.00	
Cut Area	0.00
Fill Area	69.03

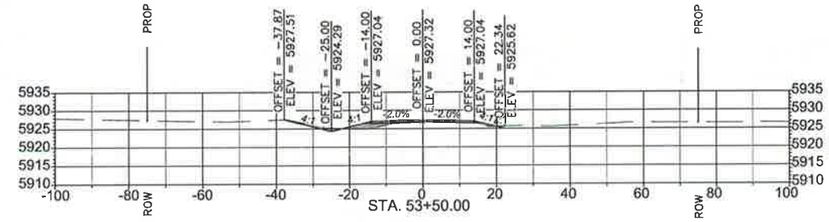

Total Volume at Station 53+50.00	
Cut Area	7.11
Fill Area	15.76

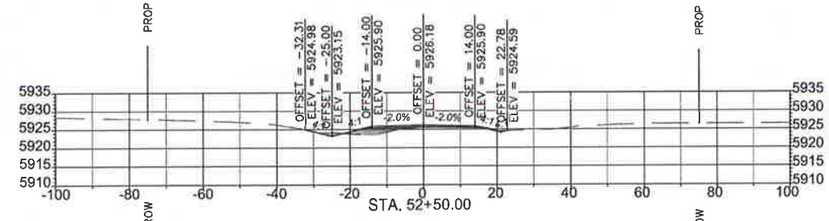

Total Volume at Station 52+50.00	
Cut Area	7.40
Fill Area	20.99

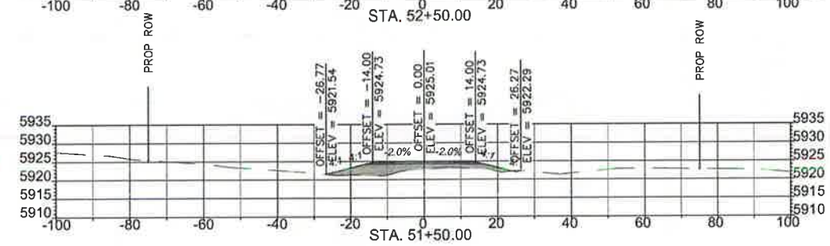

Total Volume at Station 51+50.00	
Cut Area	0.43
Fill Area	81.12

DEREK D. MEIER
NEW MEXICO
14504
LICENSED PROFESSIONAL ENGINEER
1/31/20

NAVAJO DIVISION OF TRANSPORTATION

CROSS SECTIONS

Designed by: NKC	Date: 7/19		
Drawn by: ELO	Date: 7/19		
Checked by: DDM	Date: 7/19		
File Name: N5012 X SECT.DWG			

NAVAJO D.O.T

M:\TRN\17-100-090-10\2_DISCIPLINES_REFERENCES\N5012 X SECT.DWG 1/30/2020 4:59 PM

REGION	STATE	RESERVATION	ROUTE	PROJECT NO.	SHEET	TOTAL SHEETS
NORTH	NEW MEXICO	NAVAJO	N5012	N5012(1)1,2&4	45	75

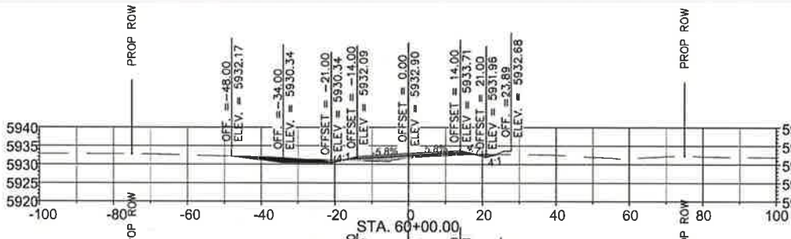

Total Volume at Station 60+00.00	
Cut Area	4.88
Fill Area	25.61

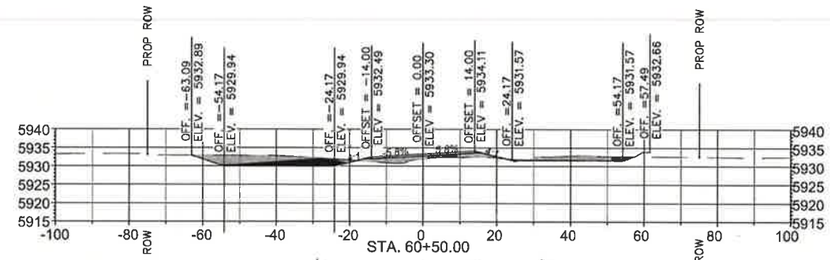

Total Volume at Station 60+50.00	
Cut Area	96.93
Fill Area	38.32

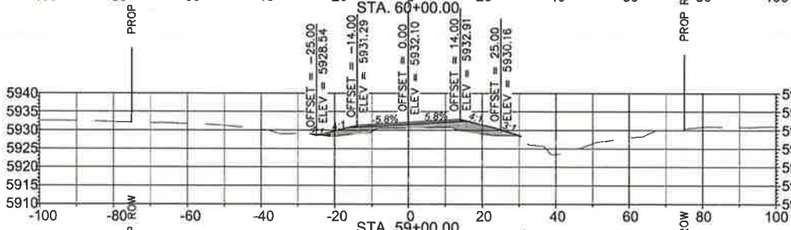

Total Volume at Station 59+00.00	
Cut Area	0.53
Fill Area	80.58

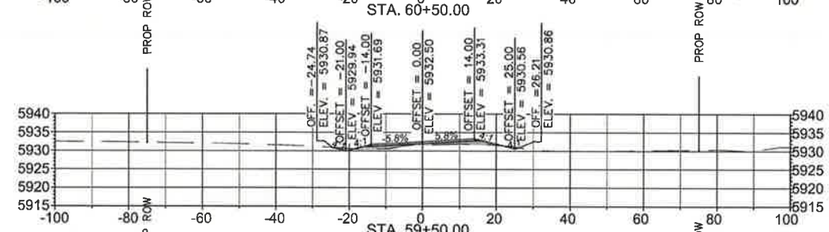

Total Volume at Station 59+50.00	
Cut Area	3.25
Fill Area	26.22

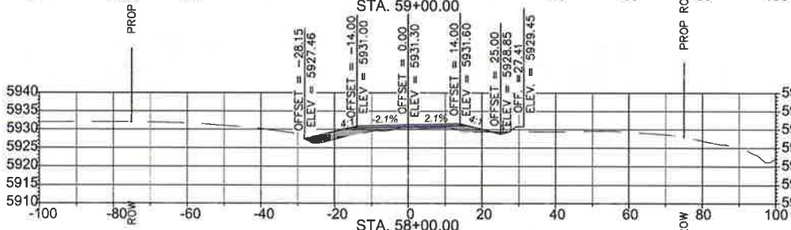

Total Volume at Station 58+00.00	
Cut Area	1.64
Fill Area	56.98

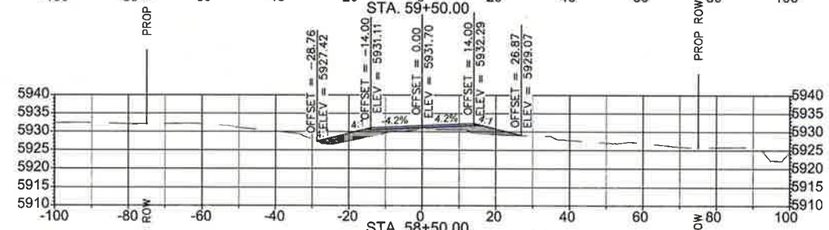

Total Volume at Station 58+50.00	
Cut Area	0.87
Fill Area	69.82

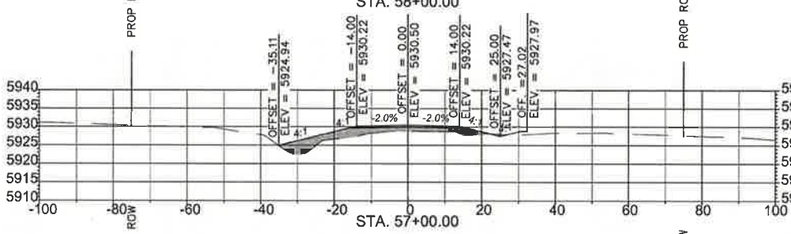

Total Volume at Station 57+00.00	
Cut Area	1.32
Fill Area	95.61

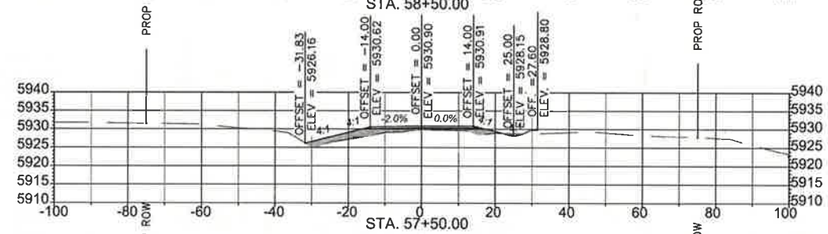

Total Volume at Station 57+50.00	
Cut Area	1.96
Fill Area	63.91

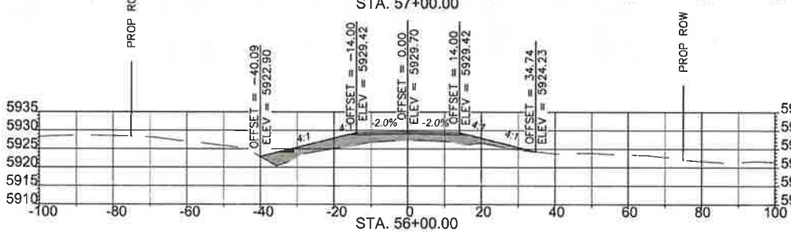

Total Volume at Station 56+00.00	
Cut Area	0.00
Fill Area	150.78

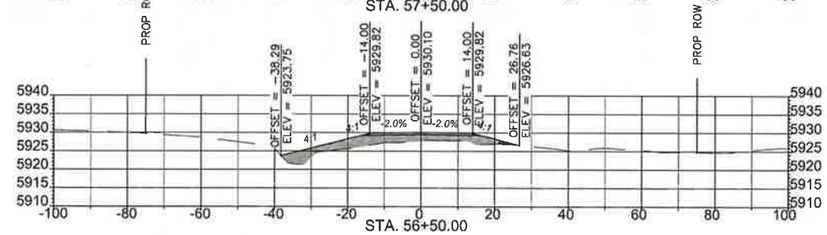

Total Volume at Station 56+50.00	
Cut Area	0.00
Fill Area	0.00

DEREK D. MEIER
NEW MEXICO
14504
LICENSED PROFESSIONAL ENGINEER
1/31/20

NAVAJO DIVISION OF TRANSPORTATION

CROSS SECTIONS

Designed by: MKC	Date: 7/19	NAVAJO D.O.T
Drawn by: ELO	Date: 7/19	
Checked by: DDM	Date: 7/19	
File Name: N5012 X SECT.DWG		

M:\TRN\17-100-090-10\2_DISCIPLINES_REFERENCES\N5012 X SECT.DWG 1/30/2020 5:00 PM

REGION	STATE	RESERVATION	ROUTE	PROJECT NO.	SHEET	TOTAL SHEETS
NORTH	NEW MEXICO	NAVAJO	N5012	N5012(1)1,2&4	46	75

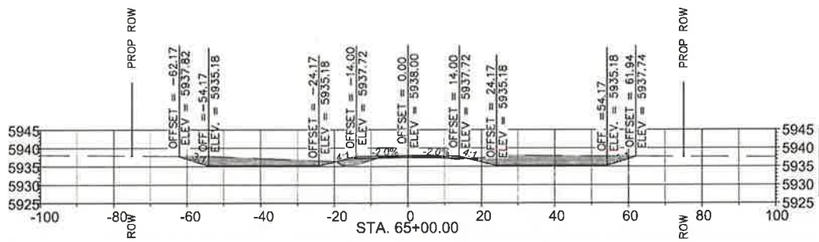

Total Volume at Station 65+00.00	
Cut Area	178.11
Fill Area	14.80

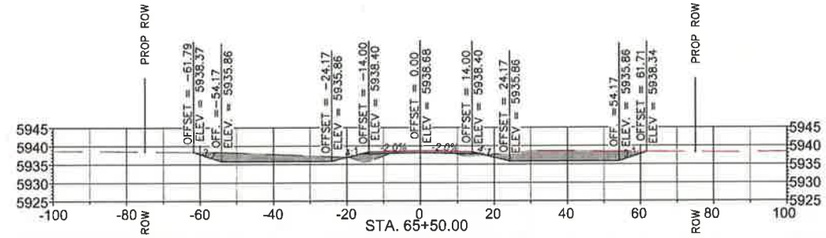

Total Volume at Station 65+50.00	
Cut Area	164.87
Fill Area	18.65

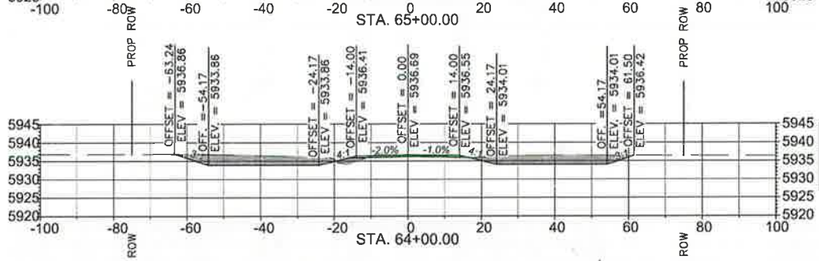

Total Volume at Station 64+00.00	
Cut Area	195.80
Fill Area	9.13

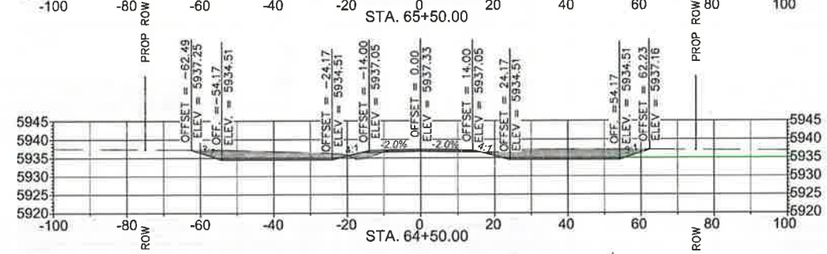

Total Volume at Station 64+50.00	
Cut Area	195.23
Fill Area	10.55

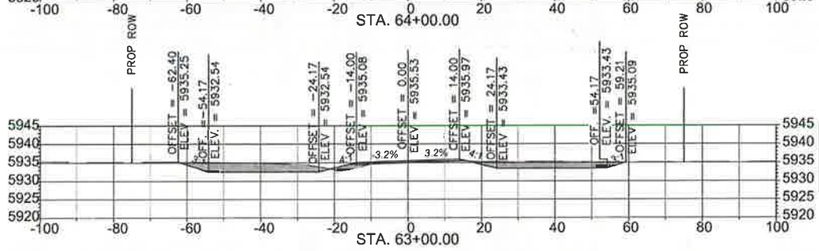

Total Volume at Station 63+00.00	
Cut Area	151.75
Fill Area	9.63

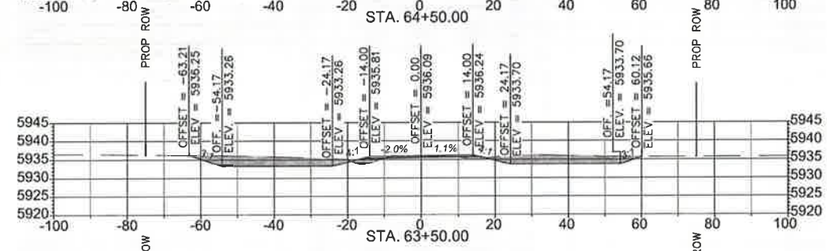

Total Volume at Station 63+50.00	
Cut Area	180.09
Fill Area	11.42

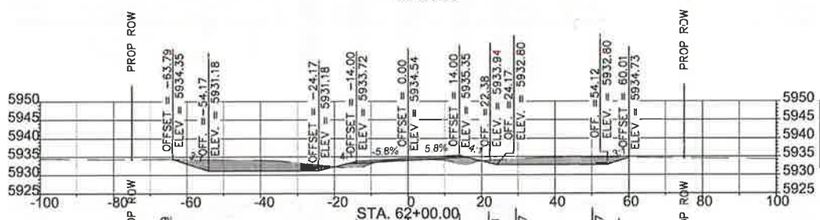

Total Volume at Station 62+00.00	
Cut Area	160.48
Fill Area	23.23

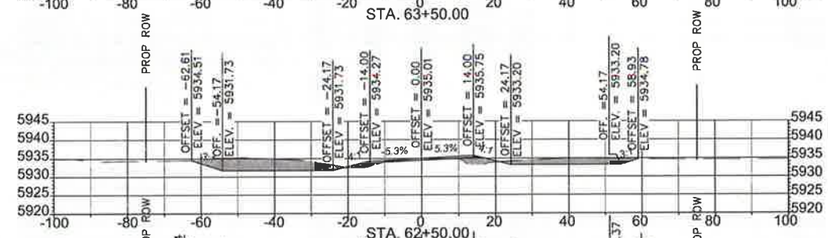

Total Volume at Station 62+50.00	
Cut Area	158.42
Fill Area	21.36

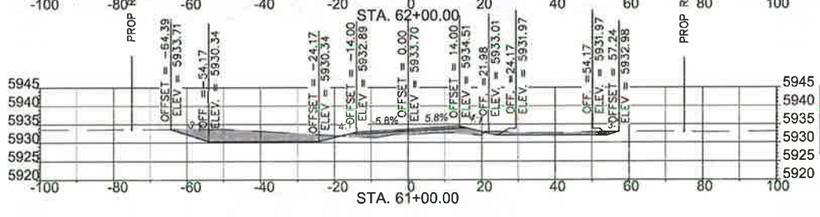

Total Volume at Station 61+00.00	
Cut Area	131.25
Fill Area	41.51

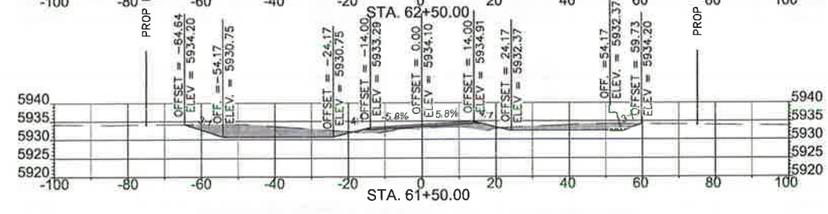

Total Volume at Station 61+50.00	
Cut Area	158.15
Fill Area	30.75

DEREK D. MEIER
NEW MEXICO
14504
LICENSED PROFESSIONAL ENGINEER
1/31/20

NAVAJO DIVISION OF TRANSPORTATION

CROSS SECTIONS

Designed by: MRC	Date: 7/19	NAVAJO D.O.T
Drawn by: ELO	Date: 7/19	
Checked by: DDM	Date: 7/19	
File Name: N5012 X SECT.DWG		

M:\TRN\17-100-090-10\2_DISCIPLINES_REFERENCES\N5012 X SECT.DWG 1/30/2020 5:00 PM

REGION	STATE	RESERVATION	ROUTE	PROJECT NO.	SHEET	TOTAL SHEETS
NORTH	NEW MEXICO	NAVAJO	N5012	N5012(1)1,2&4	47	75

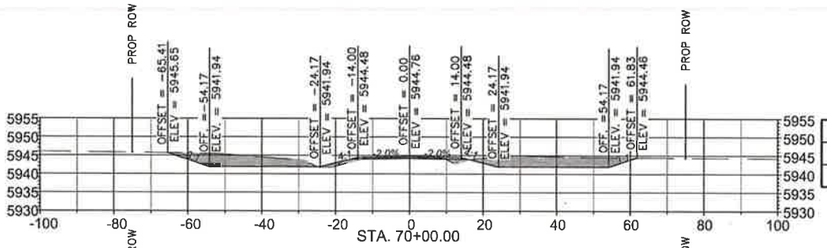

Total Volume at Station 70+00.00	
Cut Area	202.40
Fill Area	11.77

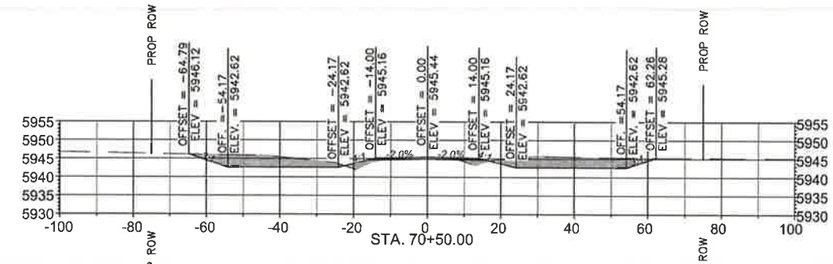

Total Volume at Station 70+50.00	
Cut Area	202.07
Fill Area	16.03

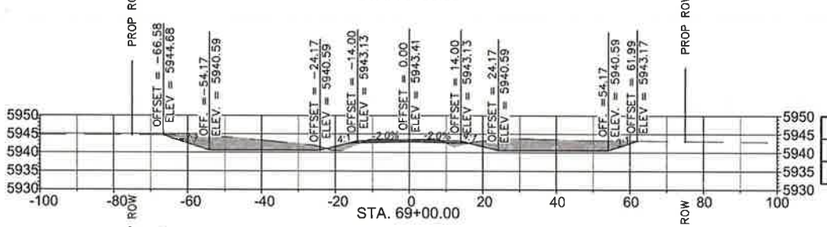

Total Volume at Station 69+00.00	
Cut Area	229.34
Fill Area	11.99

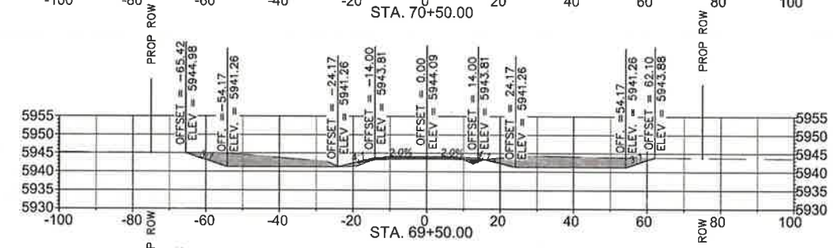

Total Volume at Station 69+50.00	
Cut Area	214.98
Fill Area	9.12

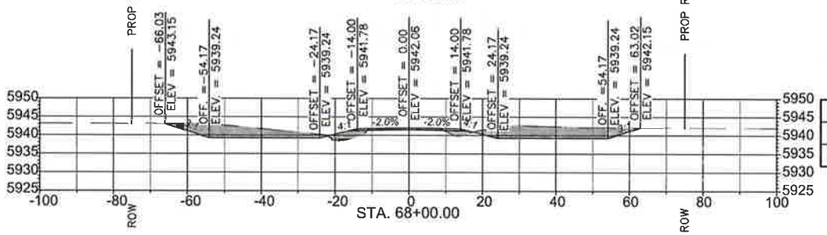

Total Volume at Station 68+00.00	
Cut Area	222.76
Fill Area	23.90

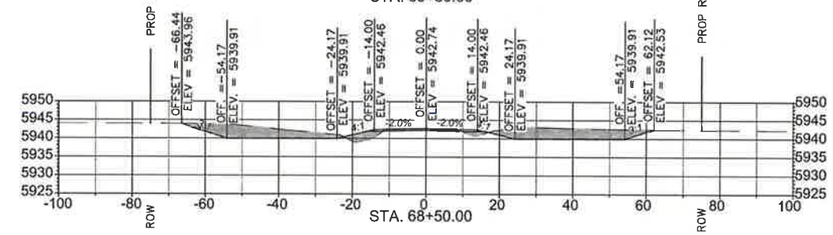

Total Volume at Station 68+50.00	
Cut Area	222.36
Fill Area	23.53

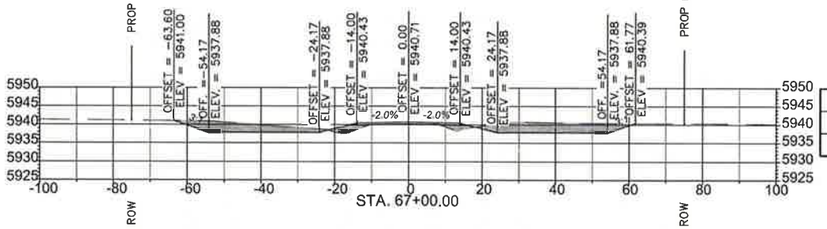

Total Volume at Station 67+00.00	
Cut Area	170.75
Fill Area	20.86

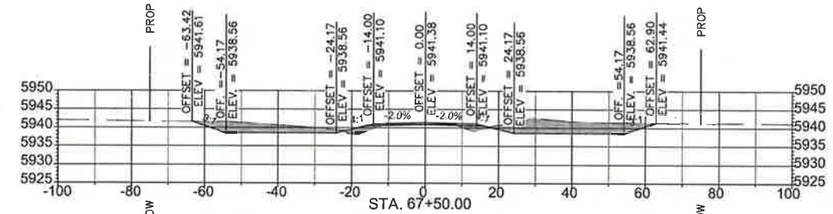

Total Volume at Station 67+50.00	
Cut Area	202.48
Fill Area	18.69

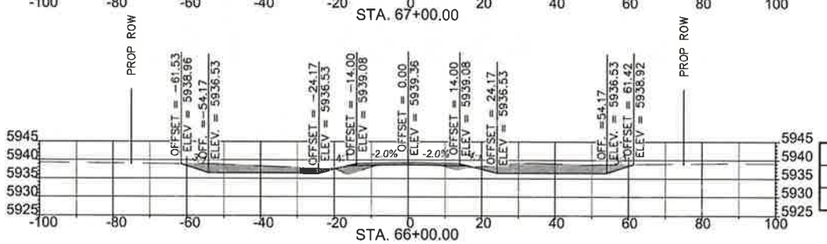

Total Volume at Station 66+00.00	
Cut Area	156.62
Fill Area	19.96

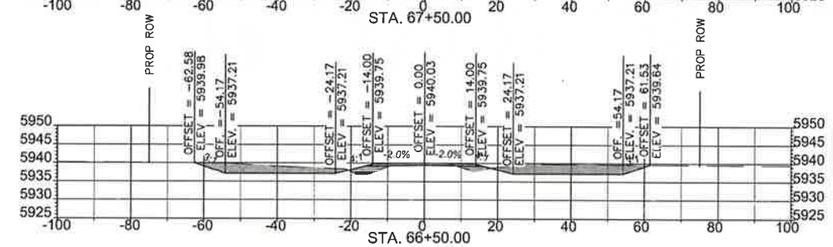

Total Volume at Station 66+50.00	
Cut Area	162.95
Fill Area	22.12

DEREK D. MEIER
NEW MEXICO
14504
LICENSED PROFESSIONAL ENGINEER
1/31/20

NAVAJO DIVISION OF TRANSPORTATION

CROSS SECTIONS

Designed by: MKC	Date: 7/19		
Drawn by: ELO	Date: 7/19		
Checked by: DDM	Date: 7/19		
File Name: N5012 X SECT.DWG			

NAVAJO D.O.T

M:\TRN\17-100-090-10\2_DISCIPLINES_REFERENCES\N5012 X SECT.DWG 1/30/2020 5:00 PM

REGION	STATE	RESERVATION	ROUTE	PROJECT NO.	SHEET	TOTAL SHEETS
NORTH	NEW MEXICO	NAVAJO	N5012	N5012(1)1,2&4	48	75

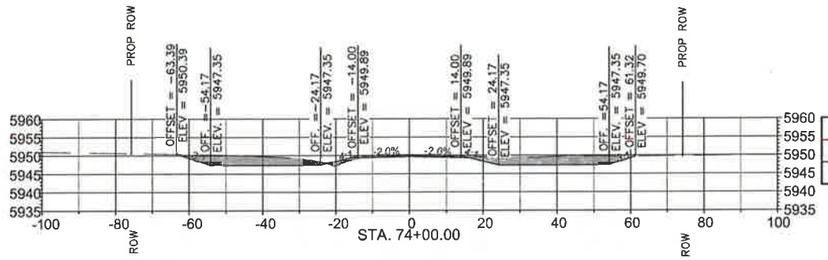

Total Volume at Station 74+00.00	
Cut Area	173.70
Fill Area	6.80

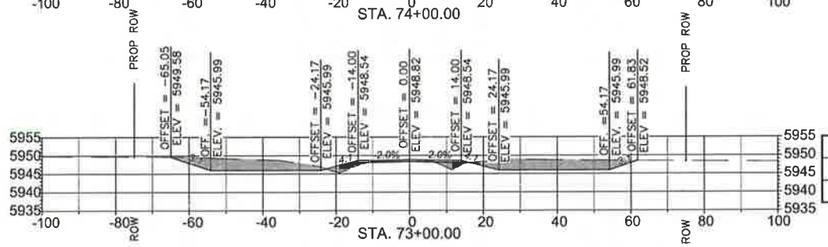

Total Volume at Station 73+00.00	
Cut Area	200.80
Fill Area	22.63

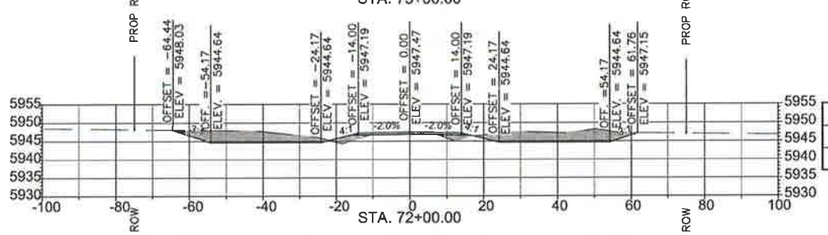

Total Volume at Station 72+00.00	
Cut Area	200.81
Fill Area	22.85

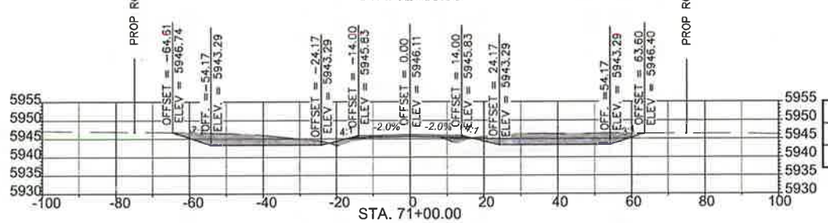

Total Volume at Station 71+00.00	
Cut Area	206.68
Fill Area	16.56

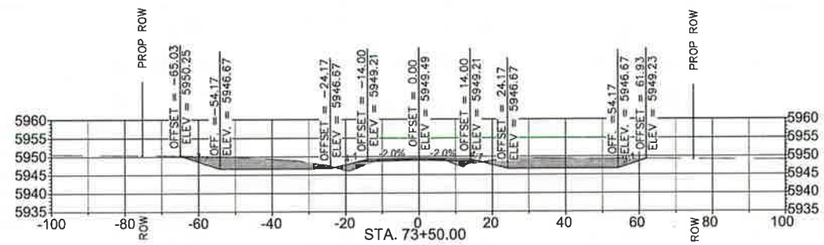

Total Volume at Station 73+50.00	
Cut Area	195.19
Fill Area	20.13

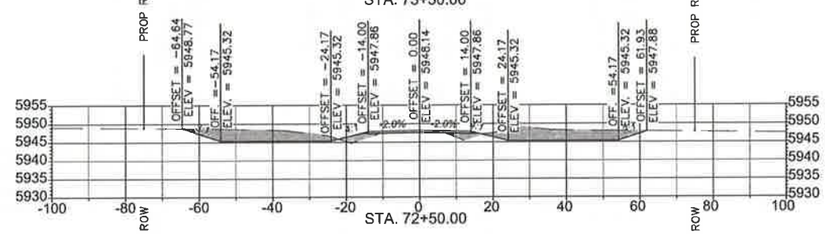

Total Volume at Station 72+50.00	
Cut Area	209.46
Fill Area	24.03

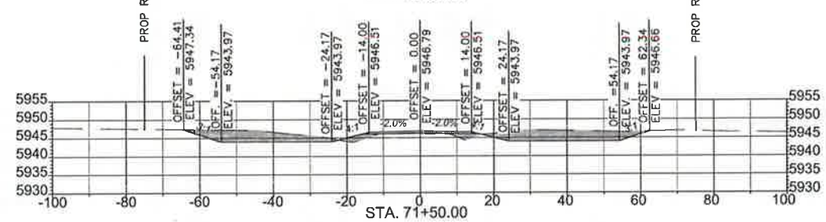

Total Volume at Station 71+50.00	
Cut Area	192.13
Fill Area	20.94

DEREK D. MEIER
NEW MEXICO
14504
LICENSED PROFESSIONAL ENGINEER
1/31/20

NAVAJO DIVISION OF TRANSPORTATION

CROSS SECTIONS

Designed by:	JPC	Date:	7/19
Drawn by:	ELO	Date:	7/19
Checked by:	DDM	Date:	7/19
File Name:	N5012 X SECT.DWG		

NAVAJO D.O.T

M:\TRN\17-100-090-10\2_DISCIPLINES_REFERENCES\N5012 X SECT.DWG 1/30/2020 5:00 PM

REGION	STATE	RESERVATION	ROUTE	PROJECT NO.	SHEET	TOTAL SHEETS
NORTH	NEW MEXICO	NAVAJO	N5012	N5012(1)1,2&4	49	75

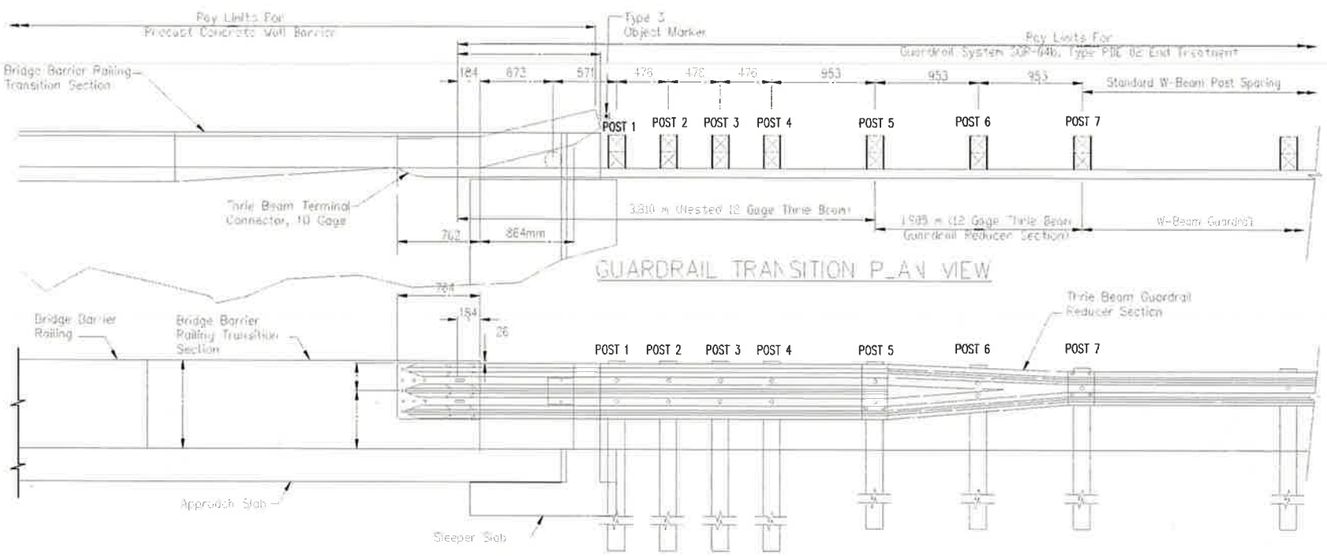

GENERAL NOTES

1. All Dimensions In Millimeters Unless Otherwise Shown.
2. All Materials and Workmanship Shall Conform To FP-14.
3. All Hardware Shall Meet FHWA Crash Worthiness Requirements As Per MASH 2016 Guidelines.
4. Five 22 mm H.T. S. Bolts Are Required For The Attachment Of The Thrie Beam Terminal Connector To The Concrete Barrier, Length To Be Determined In The Field By The Construction Manager Holes For Bolts Shall Be 25 mm Dia. And Shall Be Either Formed Or Core Drilled.
5. Furnishing And Placing Of Bolts, Washers, And Bearing Plate Shall Be Considered Incidental To The Cost Of Metal Barrier And No Direct Payment Will Be Made Therefor.
6. Install Thrie Beam Terminal Connector Between Nested Guardrail Elements On The Approach Section.
7. Install Thrie Beam Terminal Connector Outside Of The Nested Guardrail Elements On The Departure Section.
8. Bolts Are To Be Installed As Shown So That The Threaded End Of The Bolts And Nuts Are Placed Away From Traffic Side Of Rail.
9. Do Not Place Any Washers Under The Bolts On The Traffic Side Of The Barrier.
10. Reflector Tabs Shall Be Placed At 7.62 m Intervals On All Guardrail Installations.
11. The Color Of The Reflective Sheeting On The Reflector Tabs Shall Be The Same As The Color Of The Edgeline Pavement Marking In Front Of The Barrier.
12. Reflector Tabs Shall Have a Minimum Of 76 mm x 127 mm Reflective Sheeting On Both Sides And Shall Attach Securely To The Blockout.
13. Splices Shall Be Lapped So The Free End Does Not Face Traffic Flow.
14. Construction Tolerance For Height Of Guardrail Is 13 mm.
15. The Payment for Item 61701-5000 Includes Posts, Blocks, Rail, Thrie Beam & Concrete Transitition including All Other Materials and Labor to Construct Guardrail Transition as Shown on This Sheet.

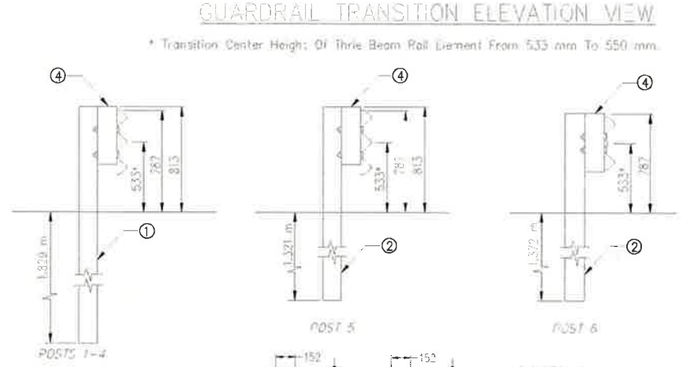

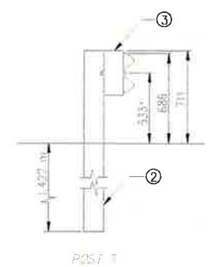

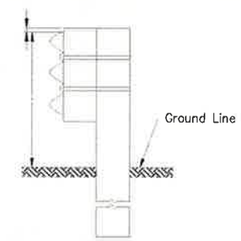

THRIE BEAM RAIL ASSEMBLY

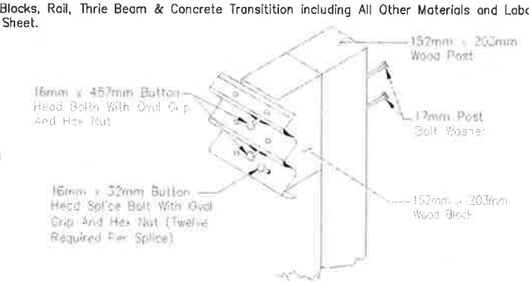

THRIE BEAM POST ASSEMBLY

LEGEND

① W152 x 635 x 2.591 m or W203 x 533 x 2.591 m Post
② W152 x 508 x 2.134 m or W203 x 457 x 2.134 m Post
③ 152 x 203 x 356 Treated Timber Offset Block
④ 152 x 203 x 457 Treated Timber Offset Block
⑤ 152 x 152 x 203 Treated Timber Offset Block

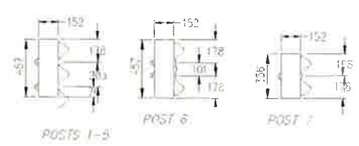

BLOCK DETAILS

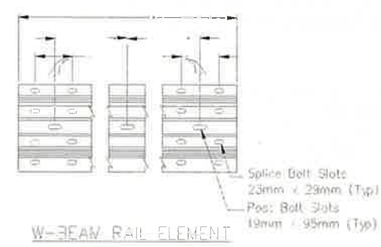

W-BEAM RAIL ELEMENT

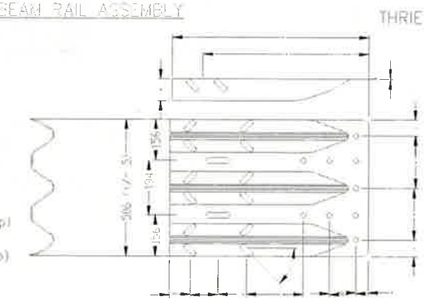

STANDARD THRIE BEAM TERMINAL CONNECTOR

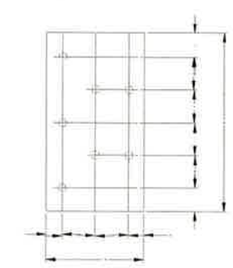

16 mm BEARING PLATE

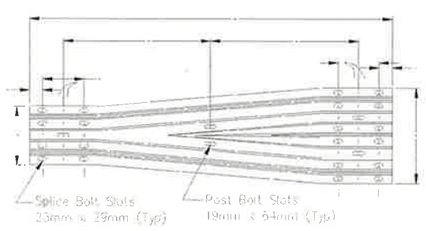

THRIE BEAM GUARDRAIL REDUCER SECTION

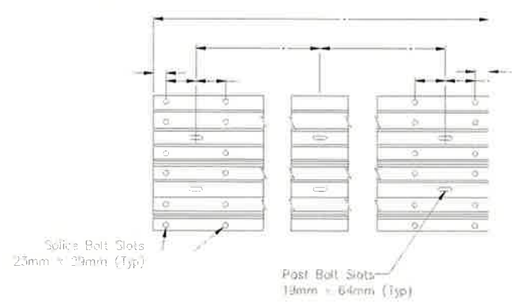

THRIE BEAM RAIL ELEMENT

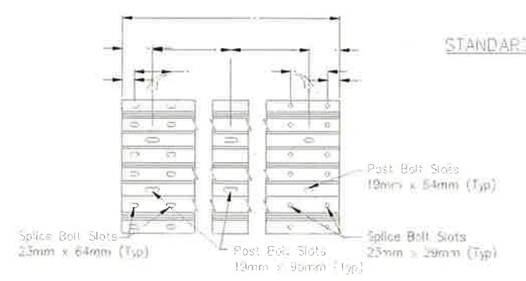

THRIE BEAM EXPANSION SECTION

NOTE: THIS DETAIL IS METRIC

NAVAJO DIVISION OF TRANSPORTATION

BIA GUARDRAIL TRANSITION AND THRIE BEAM DETAILS

Designed by: MKC	Date: 7/19
Drawn by: ELG	Date: 7/19
Checked by: DDM	Date: 7/19
File Name: C-CONSTRUCT STD N5012.DWG	

NAVAJO D.O.T

M:\TRN\17-100-090-10\2_DISCIPLINES_SHEETS\STANDARD DWGS\C-CONSTRUCT STD N5012.DWG 1/30/2020 5:13 PM

REGION	STATE	RESERVATION	ROUTE	PROJECT NO.	SHEET	TOTAL SHEETS
NORTH*	NEW MEXICO	NAVAJO	N5012	N5012(1),2&4	50	72

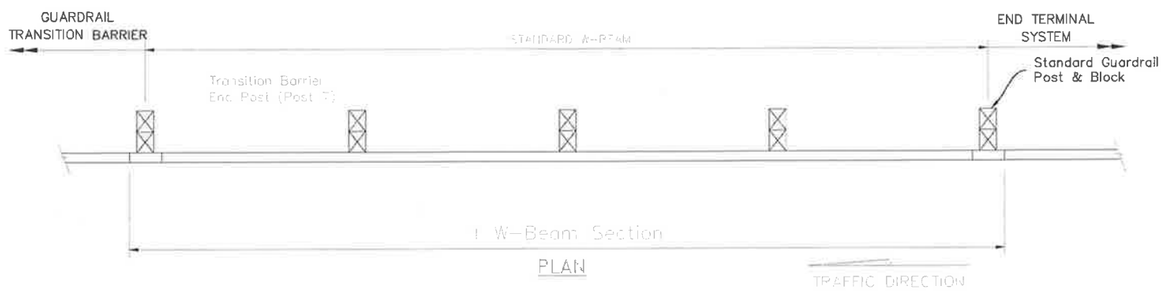

PLAN

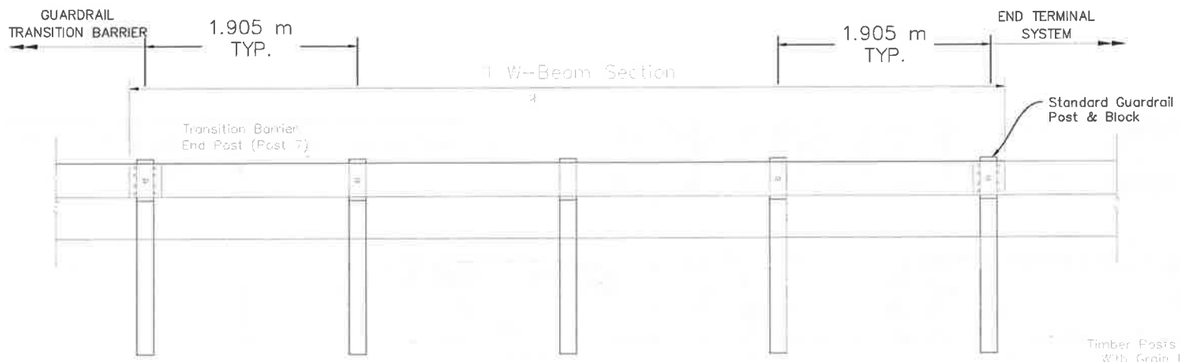

ELEVATION

* SEE GUARD RAIL SCHEDULE FOR FINAL SYSTEM AND W-BEAM LENGTHS

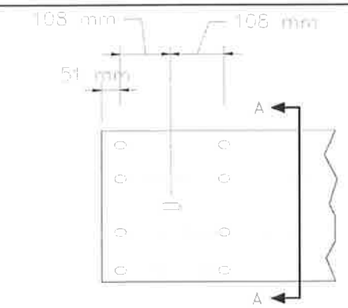

ELEVATION
RAIL

DESIGNATOR	COMPONENT	NUMBER
FBB01	Splice Bolt and Nut	8
FBB02	Guardrail-Post Bolt and Nut	1
FBB03	Guardrail Post Bolt and Nut	1
FBB04	Guardrail-Post Bolt and Nut	1
FB016a	Post Blockout Bolt (40 mm)	4
FW016a	Round Washer	8
PDB01a	Timber Post Blockout	3
PDB01b	Timber Post Blockout	3
PDE02	Timber Post	3
PDE13	Timber Post	3
PWB01	Steel Post Blockout	3
PWE01	Steel Post	3
PWE02	Steel Post	3
PWB01a	W-Beam Backup Plate	1
RWM02a	W-Beam Rail	1

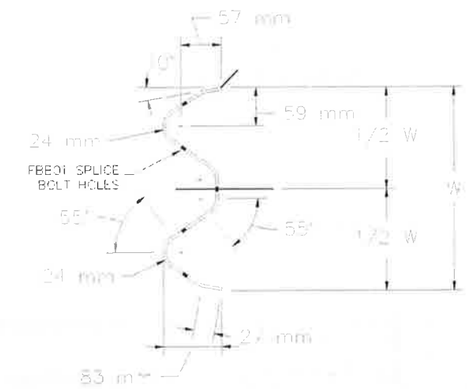

SECTION A-A
W-BEAM (RWM02A)

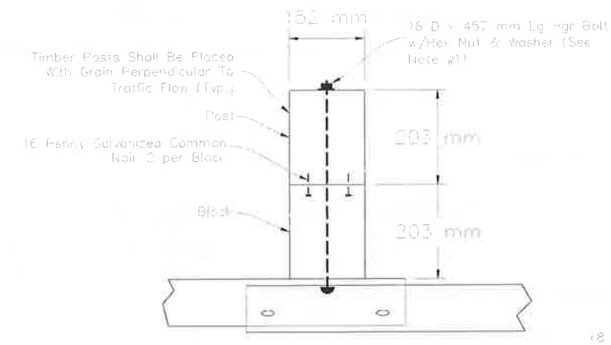

PLAN
POST/BLOCK &
SPLICE DETAIL

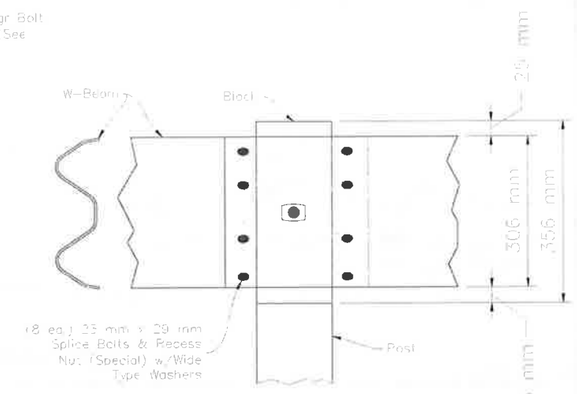

ELEVATION
POST/BLOCK
SPLICE DETAIL

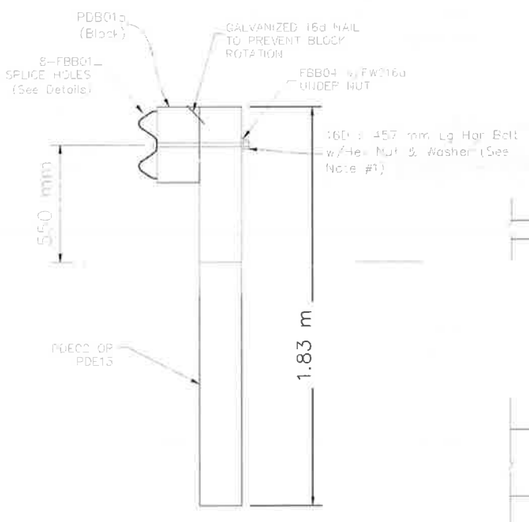

ELEVATION
STRONG-POST W-BEAM

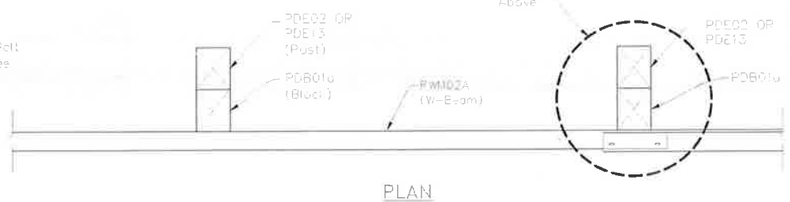

PLAN
W-BEAM/POST & BLOCK DETAILS

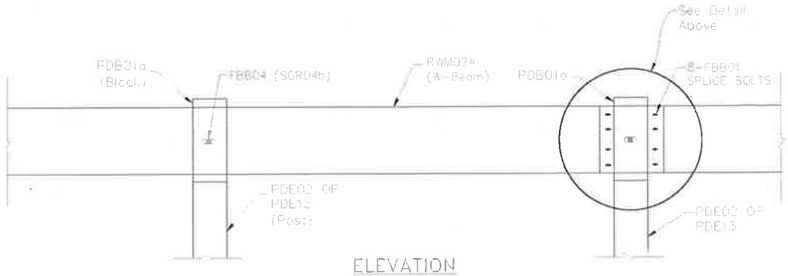

ELEVATION
W-BEAM/POST & BLOCK DETAILS

GENERAL NOTES

1. THE 16 D FLAT WASHER IS USED UNDER THE NUT, BEHIND THE POST ONLY. NO WASHER IS USED AT THE RAIL.
2. SEE SHEET 50 OF 72 FOR ADDITIONAL NOTES.
3. THE CONTRACTOR HAS THE OPTION TO USE ALL-STEEL POSTS W/WOODEN BLOCK ON STANDARD LINE POSTS, UNLESS OTEHERWISE NOTED ON THE DESIGN PLANS.
4. IF STEEL POSTS ARE APPROVED THEN RUBBER OR RECYCLED PLASTIC BLOCKS WILL BE REQUIRED AS SPECIFIED BY SUPPLIER.
5. BEGIN/END ASPHALT CURB AT POST #2.
6. BEGIN REFLECTIVE TABS ON THE W-BEAM AT EVERY FOURTH POST. THE COLOR OF THE TABS SHALL CONFORM TO THE COLOR OF THE ADJACENT EDGE LINE.
7. ANGLE STRUT MUST BE ATTACHED USING 13D HIGH STRENGTH BOLTS.

NOTE: THIS DETAIL IS METRIC

UNITED STATES
DEPARTMENT OF THE INTERIOR
BUREAU OF INDIAN AFFAIRS
NAVAJO REGIONAL OFFICE * DIVISION OF TRANSPORTATION

STANDARD GUARDRAIL
DETAIL 1

DRAWN BY: MR	DATE:10/19
DESIGNED BY: DDM	DATE:10/19
REVISED: 10/19	BY: DDM
C-CONSTRUCT STD N5012.dwg	

REGION	STATE	RESERVATION	ROUTE	PROJECT NO.	SHEET	TOTAL SHEETS
NORTH	NEW MEXICO	NAVAJO	N5012	N5012(111,2&4	51	72

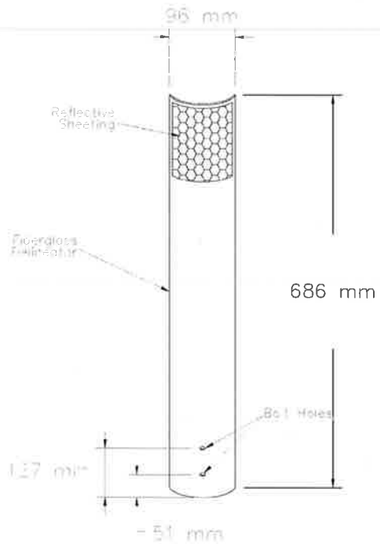

DELINEATOR DETAIL
(Reflective sheeting Shall Face Traffic)

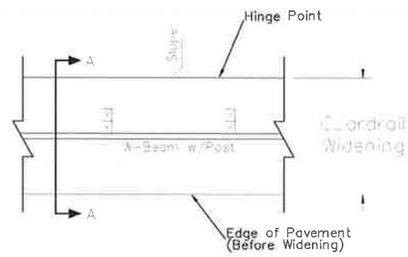

PLAN VIEW
w/NO CURBING

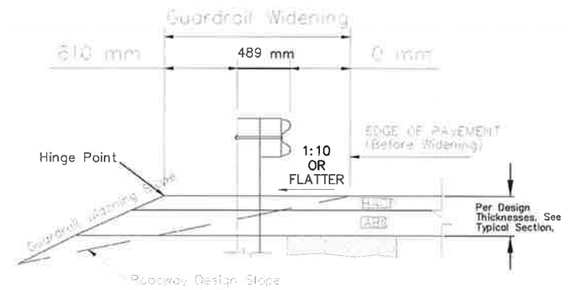

SECTION A–A
w/No Curbing

GENERAL NOTES

1. ALL GUARDRAIL "W" BEAMS, SHALL BE GALVANIZED IN ACCORDANCE WITH (AASHTO M–180, CLASS A, TYPE 1) SPECIFICATION. ALL HARDWARE SHALL CONFORM TO (ASTM A–325) AND GALVANIZED IN ACCORDANCE WITH (ASTM A–153).
2. ALL STRUCTURAL STEEL ITEMS SHOWN SHALL CONFORM TO (AASHTO N183/ASTM A36) AND BE GALVANIZED IN ACCORDANCE WITH (AASHTO M–111) SPECIFICATION.
3. WIRE ROPE, FITTINGS AND HARDWARE SHALL CONFORM TO (ASSHTO M–30) SPECIFICATION TYPE II WITH A 19 mm DIAMETER AND A CLASS B ZINC COATING.
4. WOOD POSTS AND BLOCKS SHALL BE ROUGH SAWN LUMBER OR (S4S) HAVING MINIMUM BENDING STRENGTH OF 8.27 MPa (SINGLE MEMBER USE) AND MEETING AASHTO N168 (21TH EDITION), ALL POSTS SHALL BE TREATED IN ACCORDANCE WITH (AASHTO M–133) SPECIFICATION.
5. ASPHALT CONCRETE CURBING SHALL BE INSTALLED IN ACCORDANCE WITH SECTION B–B, AND CONSIDERED INCIDENTAL TO PAVING ITEMS AND NO DIRECT PAYMENT SHALL BE MADE.
6. ALL EMBANKMENT AND AGGREGATE BASE COURSE MATERIALS SHALL BE COMPACTED TO 95% OF MAXIMUM DRY DENSITY.
7. THE EMBANKMENT MATERIALS AND THE PLACING THEREOF SHALL BE INCLUDED IN CONTRACT BID ITEM 20401–0000 AND NO DIRECT PAYMENT SHALL BE MADE.
8. THE CONTRACTOR SHALL BE REQUIRED TO COMPACT THE BACKFILL AND THE ASPHALT ALL AROUND EACH GUARD RAIL POST WITH HAND TAMPERS TO INSURE INTEGRITY OF THE PAVEMENT AND GUARDRAIL AND TO PREVENT SEEPAGE OF WATER INTO THE PAVEMENT FROM THE GUARD RAIL POST HOLES. THIS WORK SHALL BE INCIDENTAL OBLIGATIONS OF THE WORK DESCRIBED HEREIN.
9. PLACEMENT OF CHIP SEAL AND ABC MATERIAL FOR GUARDRAIL WIDENING SHALL BE INCLUDED IN BID ITEMS 30101–2000 AND 40702–1100.
10. FURNISHING & PLACEMENT OF 371 mm x 701 mm REFLECTIVE SHEETING AND REFLECTIVE TABS SHALL BE CONSIDERED INCIDENTAL TO ITEM 61701–5000 AND NO DIRECT PAYMENT SHALL BE MADE.
11. ANY RELATED PATENT RIGHTS WILL BE THE RESPONSIBILITY OF THE CONTRACTOR AS PER SECTION 107.01 OF THE FP–14.
12. THE CONTRACTOR HAS THE OPTION TO USE STEEL POSTS. IF STEEL POSTS ARE APPROVED THEN RUBBER OR RECYCLED PLASTIC BLOCKS WILL BE REQUIRED.
13. PLACE REFLECTIVE TABS ON POSTS AT EVERY FOURTH POST. THE COLOR OF THE TABS SHALL CONFORM TO THE COLOR OF THE ADJACENT EDGE LINE

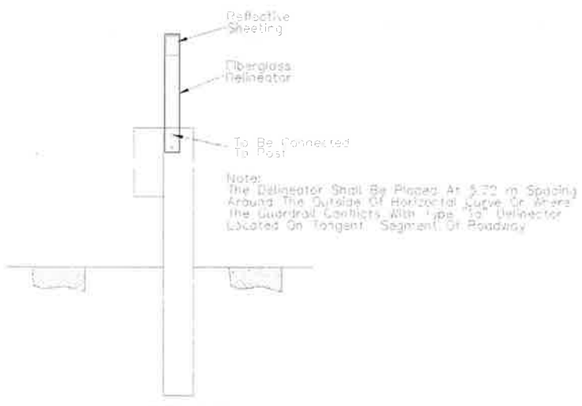

ELEVATION
GUARDRAIL/POST MOUNTED
DELINEATOR (TYP.)

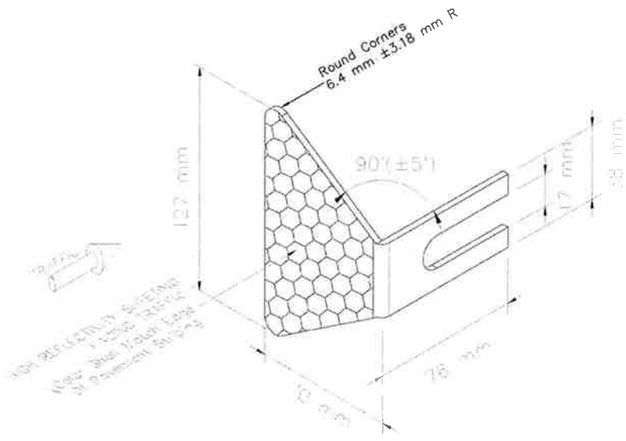

ISOMETRIC VIEW
REFLECTOR TAB DETAIL

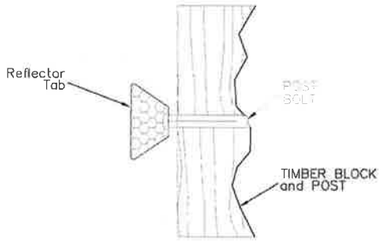

SECTION
REFLECTOR TAB
MOUNTING DETAIL
Install Tab on Every Second Post

NOTE: THIS DETAIL IS METRIC

UNITED STATES
DEPARTMENT OF THE INTERIOR
BUREAU OF INDIAN AFFAIRS
NAVAJO REGIONAL OFFICE * DIVISION OF TRANSPORTATION

STANDARD GUARDRAIL
DETAIL 2

DRAWN BY: MP	DATE: 10/19
DESIGNED BY: DDM	DATE: 10/19
REVISED: 10/2019	BY: DDM
Z:\CONSTRUCT STD N5012.dwg	

REGION	STATE	RESERVATION	ROUTE	PROJECT NO.	SHEET	TOTAL SHEETS
NORTH	NEW MEXICO	NAVAJO	N5012	N5012(1)1,2&4	52	72

*FOR ELEVATIONS ABOVE (1,220 m) USE THE VALUES IN PARENTHESES

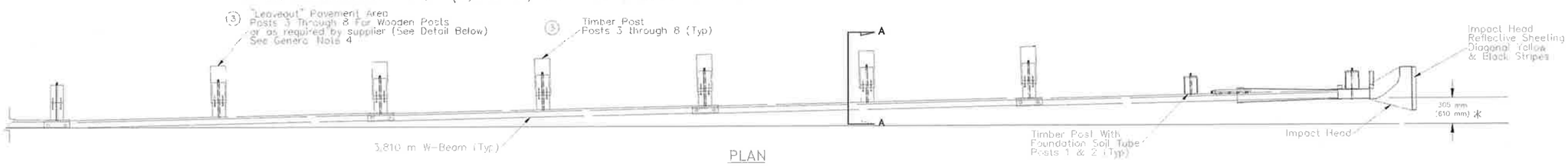

PLAN

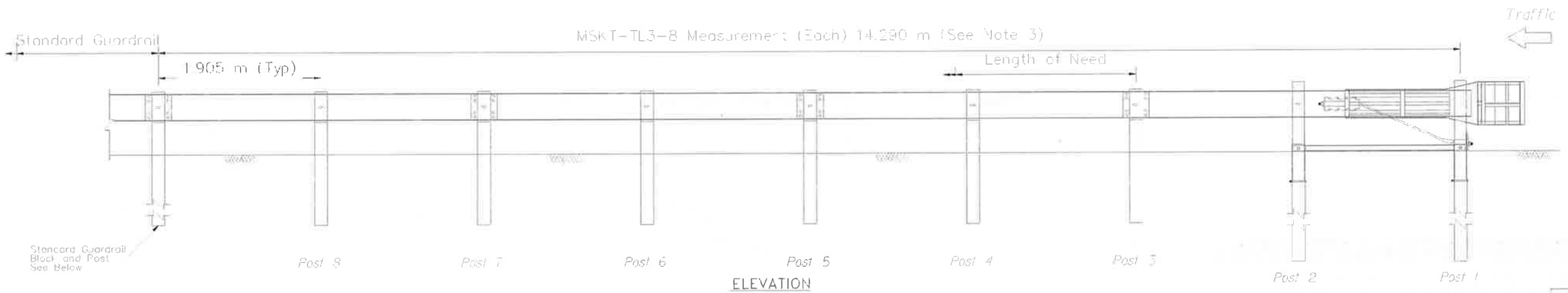

ELEVATION

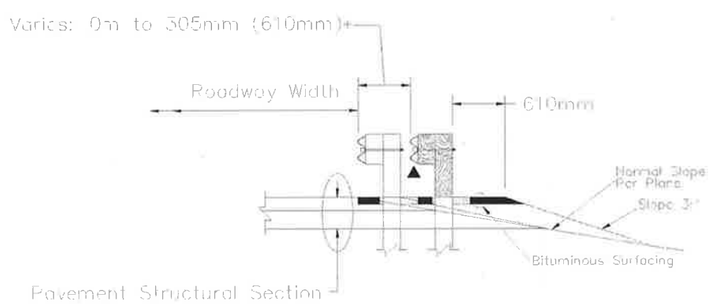

TYPE A SECTION

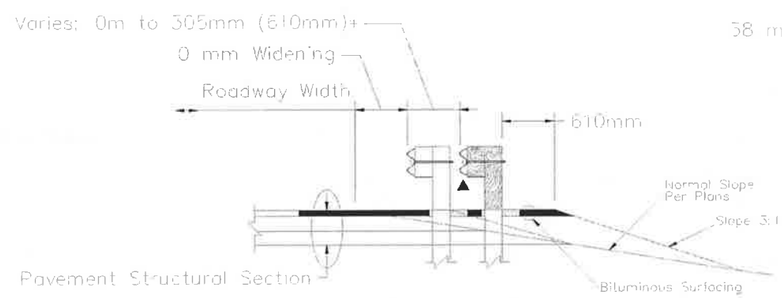

TYPE B SECTION

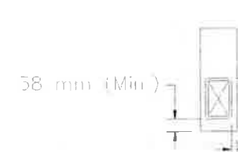

LEAVEOUT DETAIL

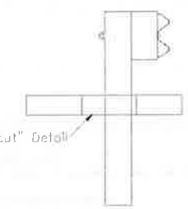

SECTION A-A
Typical At Post 3 Thru 8

GENERAL NOTES

1. THIS DETAIL IS FOR ROADWAY LAYOUT ONLY.
2. THE MSKT-TL3-8 SHALL BE INSTALLED IN ACCORDANCE WITH THE MANUFACTURER'S SPECIFICATIONS AND CURRENT APPROVED DRAWINGS INCLUDING ALL MATERIALS, HARDWARE, AND OTHER INFORMATION AS SHOWN IN THESE PLANS.
3. THE 14.290 m W-BEAM LENGTH SHALL CONSIST OF FOUR SECTIONS, THE END SECTION BEING A PROPRIETARY SPLIT RAIL.
4. IF SPECIFIED BY THE SUPPLIER, THE "LEAVEOUT" IN ASPHALTIC CONCRETE SHALL BE PROVIDED IN THE AC PAVEMENT AROUND THE GUARDRAIL POSTS AT THE LOCATIONS AND DIMENSIONS SPECIFIED BY SUPPLIER APPROVED SHOP DRAWING. "LEAVEOUT" MATERIAL SHALL CONSIST OF A 1-SACK GROUT MIX OR OTHER NON-COHESIVE MATERIAL AS APPROVED BY THE COR/COTR.

See Sheet 53 For General Notes.

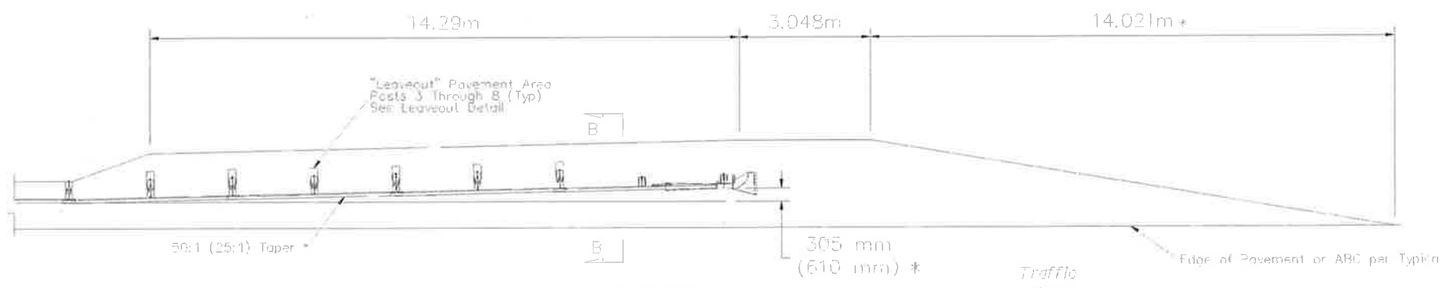

TYPE B GUARDRAIL INSTALLATION
(FACE OF RAIL OFFSET 610mm FROM NORMAL EDGE OF PAVEMENT)

NOTE: THIS DETAIL IS METRIC

UNITED STATES
DEPARTMENT OF THE INTERIOR
BUREAU OF INDIAN AFFAIRS
NAVAJO REGIONAL OFFICE * DIVISION OF TRANSPORTATION

GUARDRAIL END TREATMENT
MSKT-TL3-8 LAYOUT; SHEET 1 of 2

DRAWN BY: MR	DATE:10/19
DESIGNED BY: DDM	DATE:10/19
REVISED: 10/19	BY: DDM
C-CONSTRUCT STD N5012.dwg	

REGION	STATE	RESERVATION	ROUTE	PROJECT NO.	SHEET	TOTAL SHEETS
NORTH	NEW MEXICO	NAVAJO	N5012	N5012(1)1,2&4	53	72

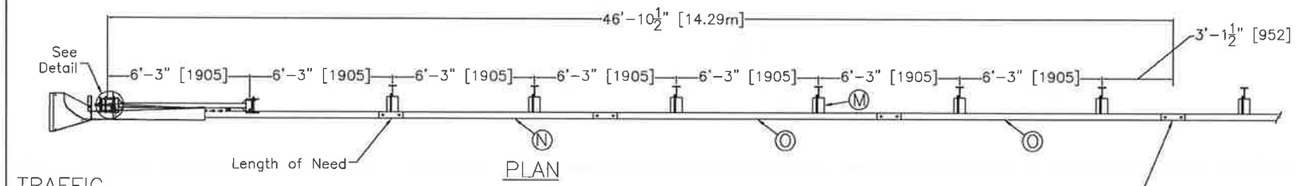

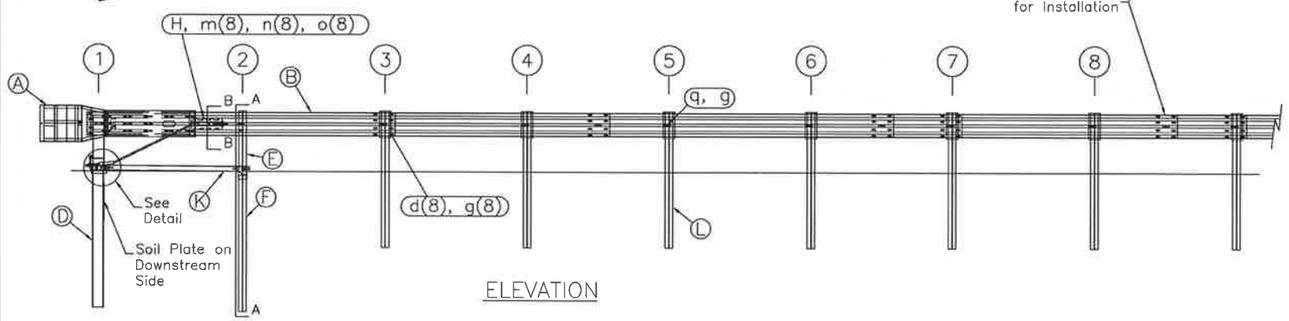

ELEVATION

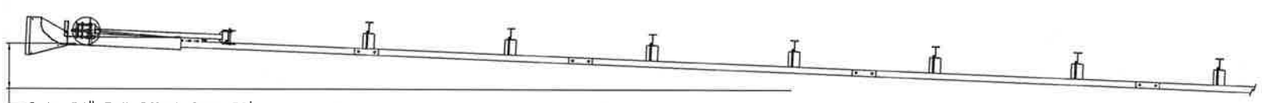

OPTIONAL FLARED INSTALLATION
25:1 maximum flare rate

ITEM	QTY	BILL OF MATERIALS	ITEM NO.
A	1	IMPACT HEAD	MS3000
B	1	W-BEAM GUARDRAIL END SECTION, 12 Ga.	SF1303
C	1	FIRST POST TOP (6X6X⅛" Tube)	MTPHP1A
D	1	FIRST POST BOTTOM (6' W6X15)	MTPHP1B
E	1	SECOND POST ASSEMBLY TOP	UHP2A
F	1	SECOND POST ASSEMBLY BOTTOM	HP2B
G	1	BEARING PLATE	E750
H	1	CABLE ANCHOR BOX	S760
J	1	BCT CABLE ANCHOR ASSEMBLY	E770
K	1	STRUT	MS785
L	6	6x9 (6x8.5) STEEL POST	P621
M	6	RECYCLED PLASTIC BLOCK OR EQUIV.	CBSP-14
N	1	W-BEAM MGS RAIL SECTION (9'-4 1/2")	G12025
O	2	W-BEAM MGS RAIL SECTION (12'-6")	G1203A
		HARDWARE (ALL DIMENSIONS IN INCHES)	
a	2	5/16 x 1 HEX BOLT GRD 5	B5160104A
b	4	5/16 WASHER	W0516
c	2	5/16 HEX NUT	N0516
d	25	5/8 Dia. x 1 1/4 SPLICE BOLT (POST #2)	B580122
e	2	5/8 Dia. x 9 HEX BOLT A449	B580904A
f	3	5/8 WASHER	W050
g	33	5/8 Dia. H.G.R NUT	N050
h	1	3/4 Dia. x 8 1/2 HEX BOLT GRD A449	B340854A
j	1	3/4 Dia. HEX NUT	N030
k	2	1 ANCHOR CABLE HEX NUT	N100
l	2	1 ANCHOR CABLE WASHER	W100
m	8	1/2 RSI SHOULDER BOLT W/WASHER	SB12A
n	8	1/2 STRUCTURAL NUT	N012A
o	8	1/2 STRUCTURAL WASHER	W012A
p	1	BEARING PLATE RETAINER TIE	CT-100ST
q	6	5/8" x 10" H.G.R. BOLT	B581002

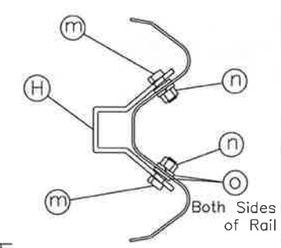

SECTION B-B
Anchor Bracket

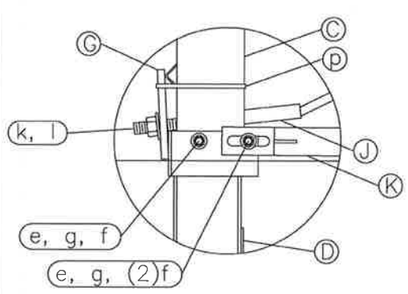

Post #1 Connection Detail

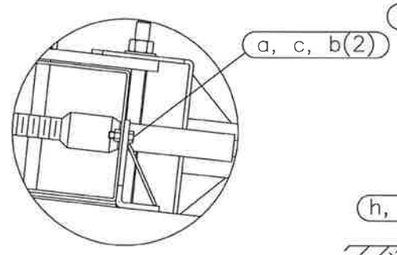

Impact Head Connection Detail

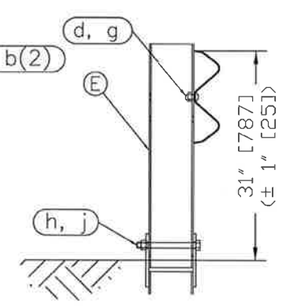

SECTION A-A
Post #2

NOTES:

1. BREAKAWAY POSTS ARE REQUIRED WITH SEQUENTIAL KINKING TERMINAL.
2. ALL BOLTS, NUTS, CABLE ASSEMBLIES, CABLE ANCHORS AND BEARING PLATES SHALL BE GALVANIZED.
3. THE MSKT-TL3-8 CAN BE FLARED AT A RATE OF 25:1 TO PREVENT THE IMPACT HEAD FROM ENCROACHING ON THE SHOULDER. THE FLARE IS NOT REQUIRED MAY BE DECREASED OR ELIMINATED FOR SPECIFIC INSTALLATIONS.
4. THE SOIL TUBES SHALL NOT PROTRUDE MORE THAN 102 mm ABOVE GROUND (MEASURED ALONG A 1.5 m CHORD). SITE GRADING MAY BE NECESSARY TO MEET THIS REQUIREMENT.
5. THE SOIL TUBES MAY BE DRIVEN WITH AN APPROVED DRIVING HEAD. SOIL TUBES SHOULD NOT BE DRIVEN WITH THE POST IN THE TUBE. IF THE ARE PLACED IN DRILLED HOLES, THE BACKFILL MATERIAL MUST BE SATISFACTORILY COMPACTED TO PREVENT SETTLEMENT.
6. WHEN ROCK IS ENCOUNTERED DURING EXCAVATION, A 308 mm DIA. POST HOLE, 508 mm INTO ROCK MAY BE USED IF APPROVED BY THE ENGINEER. GRANULAR MATERIAL WILL BE PLACED IN THE BOTTOM OF THE HOLE APPROX. 64 mm DEEP TO PROVIDE DRAINAGE. THE SOIL TUBES WILL BE FIELD CUT TO LENGTH, PLACED IN THE HOLE, AND BACKFILLED WITH ADEQUATELY COMPACTED MATERIAL EXCAVATED FROM HOLE.
7. THE BREAKAWAY CABLE ASSEMBLY MUST BE TAUT. A LOCKING DEVICE, (VICE-GRIPS OR CHANNEL-LOCK PLIERS) SHOULD BE USED TO PREVENT CABLE FROM TWISTING WHEN TIGHTENING NUTS.
8. A SPECIAL SITE EVALUATION SHOULD BE CONSIDERED PRIOR TO USING THE MSKT-TL3-8 WHERE THERE IS LESS THAN 7.620 m BETWEEN THE OUTLET SIDE AND ANY ADJACENT DRIVING LANE.
9. THE WOOD BLOCKOUTS SHOULD BE "TOE-NAILED" TO THE WOOD POSTS TO PREVENT THEM FROM TURNING WHEN WOOD SHRINKS.
10. GUARDRAIL SPLICE SHALL BE OVERLAPPED IN HE DIRECTION OF THE ADJACENT TRAFFIC.
11. BILL OF MATERIALS AND SOME OF THE DETAILS HEREIN WERE PROVIDED BY ROAD SYSTEMS INC.
12. ALL BOLTS, NUTS, CABLES ASSEMBLIES, CABLE ANCHORS AND BEARING PLATES SHALL BE GALVANIZED.
13. THE LOWER SECTION OF THE POSTS 1 & 2 SHALL NOT PROTRUDE MORE 4 in. (100 m) ABOVE THE GROUND (MEASURED ALONG A 5' [1.5M] CORD LONGITUDINAL TO THE SYSTEM). SITE GRADING MAY BE NECESSARY TO MEET THIS REQUIREMENT.
14. THE LOWER SECTION OF THE HINGED POST SHOULD NOT BE DRIVEN WITH THE UPPER POST ATTACHED. IF THE POST IS PLACED IN A DRILLED HOLE, THE BACKFILL MATERIAL MUST BE SATISFACTORILY COMPACTED TO PREVENT SETTLEMENT.
15. THE TERMINAL BREAK-AWAY SYSTEM SHALL MEET THE CRASH TEST AND EVALUATION CRITERIA ASSHTO MASH (TL3).
16. THE DETAILS PROVIDED ARE FROM ROAD SYSTEMS INC. THE CONTRACTOR SHALL PROVIDE THE SKT IMPACT HEAD WITH 350 SKT TERMINALS OR EQUAL FROM ANY APPROVED VENDER.
17. DIMENSIONS IN BRACKETS [ ] ARE METRIC.
18. SEE THE CONTRACT SUPPLEMENTAL SPECIFICATION FOR SECTION 617 FOR ADDITIONAL REQUIREMENTS.

UNITED STATES
DEPARTMENT OF THE INTERIOR
BUREAU OF INDIAN AFFAIRS
NAVAJO REGIONAL OFFICE * DIVISION OF TRANSPORTATION

GUARDRAIL END TREATMENT
MSKT-TL3-8 LAYOUT; SHEET 2 of 2

DRAWN BY: MP	DATE: 10/19
DESIGNED BY: DOM	DATE: 10/19
REVISED: 10/19	BY: DOM
E-CONSTRUCT STD N5012.dgn	

NOTE: THIS DETAIL IS ENGLISH [METRIC]

REGION	STATE	RESERVATION	ROUTE	PROJECT NO.	SHEET	TOTAL SHEETS
NORTH	NEW MEXICO	NAVAJO	N5012	N5012(1)1,2&4	54	75

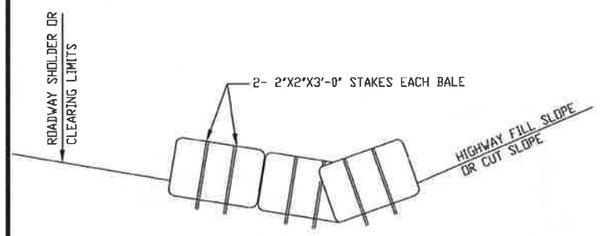

ELEVATION
SWALE

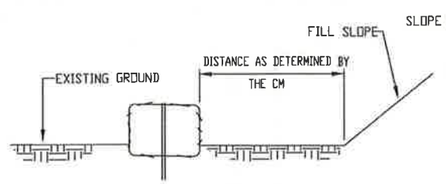

ELEVATION

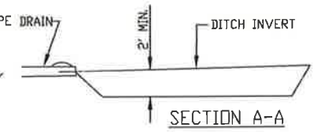

SECTION A-A

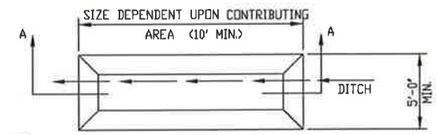

SEDIMENT TRAP

GENERAL NOTES:

1. SEDIMENT TRAPS, EROSION CHECKS, AND/OR FILTERS ARE TO BE CONSTRUCTED PRECEDING OR FOLLOWING ALL CULVERT OR OTHER DRAINS AND IN ALL DITCHES BEFORE THE WATER (RUNOFF) LEAVES THE PROJECT CONSTRUCTION LIMITS OR ENTERS A STREAM, AND AT OTHER LOCATIONS AS DESIGNATED BY THE CONSTRUCTION MANAGER (CM).
2. SEDIMENT TRAPS ARE TO BE CLEANED OF ACCUMULATED SEDIMENT WHEN APPROXIMATELY 75 PERCENT FILLED WITH SUCH SEDIMENT.
3. TEMPORARY SLOPE DRAINS (BERMS, DRAINS, AND RIPRAP, IF NECESSARY) ARE USED AS THE EMBANKMENT IS CONSTRUCTED. LOCATION AND SPACING OF THE DRAIN ASSEMBLY WILL BE DESIGNATED BY THE CM. ALL SLOPE DRAINS ARE TO BE IN PLACE BY THE END OF EACH WORK SHIFT. THE DRAIN ASSEMBLIES ARE TO BE USED UNTIL THE SLOPES ARE PROTECTED WITH PERMANENT SOIL EROSION CONTROL MEASURES.
4. ALL DIMENSIONS AND LOCATIONS OF TEMPORARY SOIL EROSION AND WATER POLLUTION CONTROL DEVICES ARE SUBJECT TO ADJUSTMENT, AS DESIGNATED BY THE CM.
5. WHEN THE TEMPORARY SOIL EROSION AND WATER POLLUTION CONTROL DEVICES ARE NO LONGER REQUIRED FOR THE INTENDED PURPOSE, IN THE OPINION OF THE CM, THEY WILL BE OBLITERATED OR REMOVED.
6. MATERIALS FOR FILTER FENCE WILL CONSIST OF STANDARD WOVEN LIVE-STOCK WIRE, A MIN. OF 24 INCHES IN HEIGHT, A MIN. OF 14-GAGE WIRE, WITH A MAX. MESH SPACING OF 6 INCHES; POSTS ARE EITHER WOOD OR STEEL, MIN. LENGTH OF 4 FEET; AND FABRIC WILL MEET THE REQUIREMENTS OF FP-14, SUBSECTION 714.01(a).

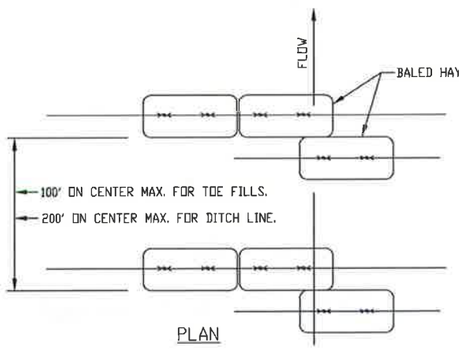

PLAN

STRAW BALE EROSION CHECK

NOTES:

1. EMBED BALES 4 TO 6 INCHES INTO GROUND.
2. IN AREAS WHERE BALES MAY BE ALLOWED TO REMAIN IN PLACE, WOOD STAKES MUST BE USED. IN OTHER AREAS ALTERNATE STAKES MAY BE USED.
3. OTHER CONFIGURATION AS DIRECTED BY THE AWARDING OFFICIAL.
4. LOOSE HAY OR STRAW WILL BE STUFFED BETWEEN BALES TO FILL VOIDS.

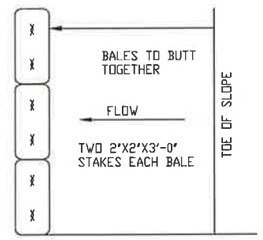

PLAN

STRAW BALE SILT BARRIER

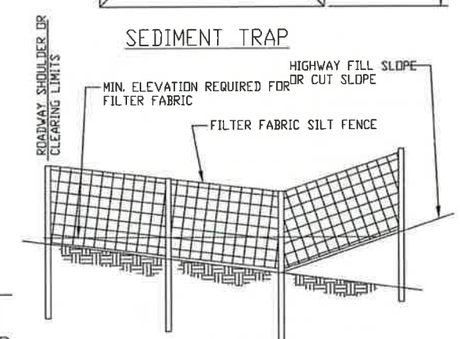

ELEVATION

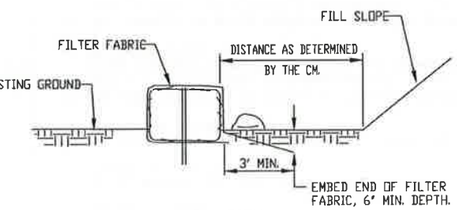

ELEVATION

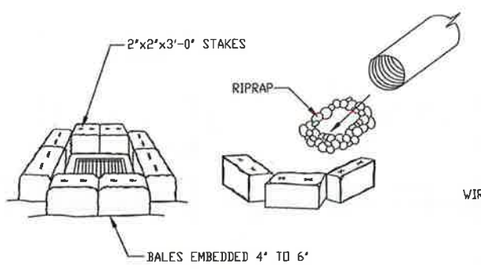

STRAW BALE FILTER

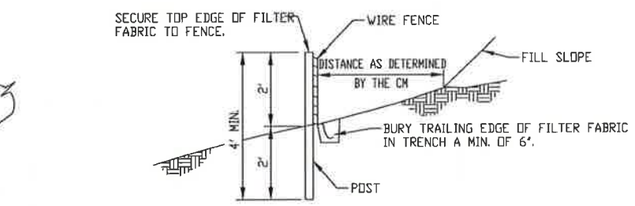

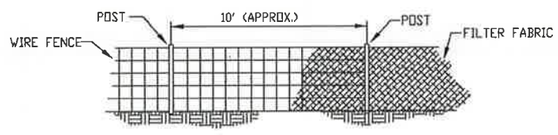

FILTER FABRIC SILT FENCE

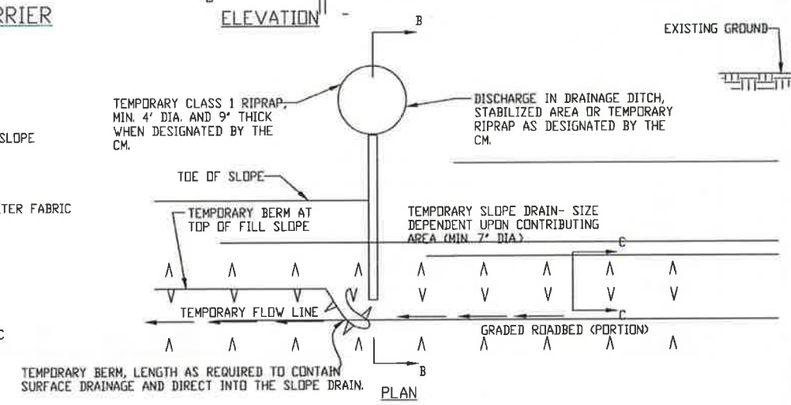

PLAN

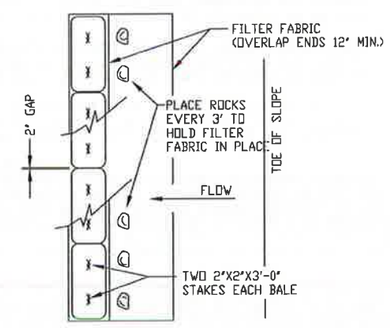

PLAN

STRAW BALES AND FILTER FABRIC SILT FENCE

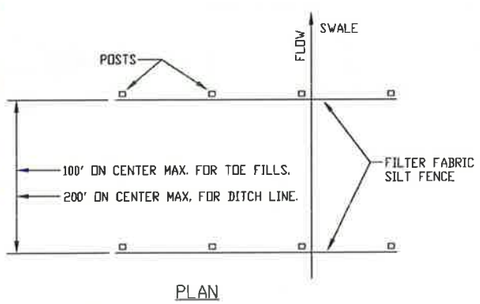

PLAN

SILT FENCE EROSION CHECK

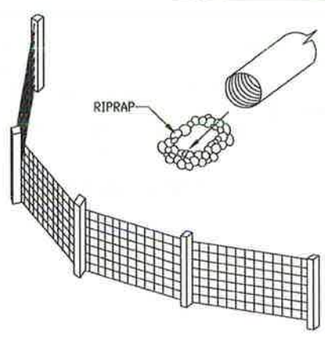

SILT FENCE FILTER

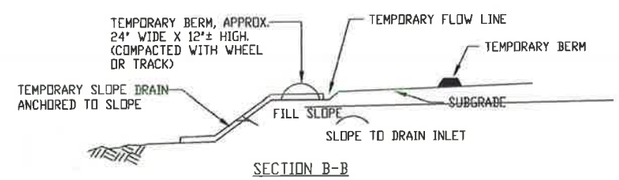

SECTION B-B

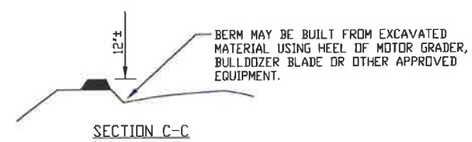

SECTION C-C

TEMPORARY SLOPE DRAIN, BERM & RIPRAP

(FOR FILL SLOPES)

NAVAJO DIVISION OF TRANSPORTATION

STANDARD SOIL EROSION AND POLLUTION CONTROL DEVICES DETAILS

Designed by: MKC		Date: 7/19	
Drawn by: ELG		Date: 7/19	
Checked by: DDM		Date: 7/19	
File Name:	G-CONSTRUCT STD N5012.DWG		

NAVAJO D.O.T

M:\TRN\17-100-090-10\2_DISCIPLINES_SHEETS\STANDARD DWGS\G-CONSTRUCT STD N5012.DWG 1/30/2020 5:16 PM

REGION	STATE	RESERVATION	ROUTE	PROJECT NO.	SHEET	TOTAL SHEETS
NORTH	NEW MEXICO	NAVAJO	N5012	N5012(1)1,2&4	55	75

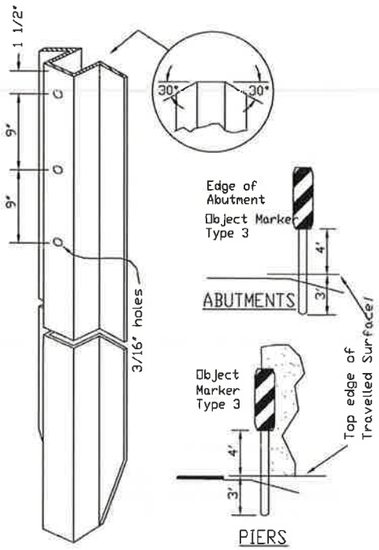

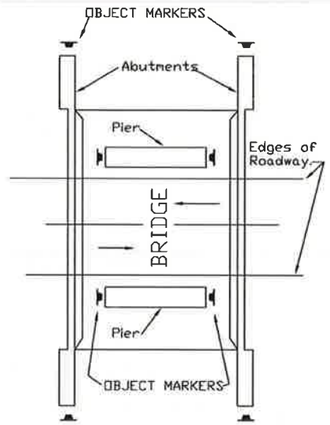

PLACEMENT OF DELINEATORS AT BRIDGE ABUTMENTS AND PIERS

Above plan for 2 lane - 2 way roadways. Use delineators on approach side only on 2 lane - 1 way roadways. (One half of divided highway.)

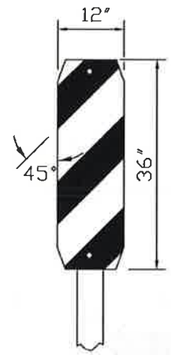

OBJECT MARKER TYPE 3

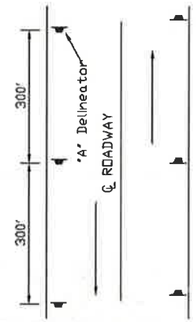

2 LANE - 2 WAY

PLAN ON HIGH FILLS

Not neccessarily needed on both sides. Use only on side of roadway that meets high fill requirements.

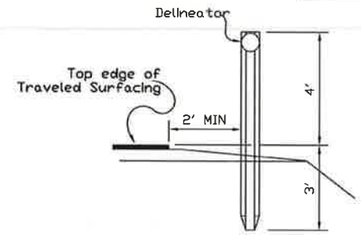

DELINEATOR PLACEMENT

(In relation to Roadway Edge) AT STRUCTURE HEADWALLS ON HIGH FILLS AND CURVES

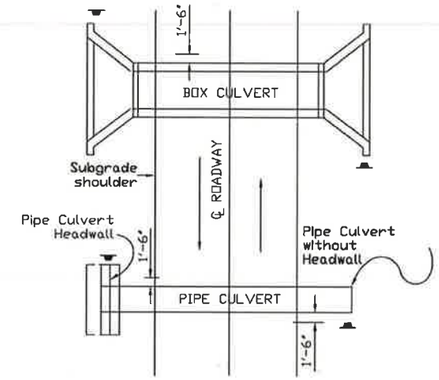

PLAN AT STRUCTURES

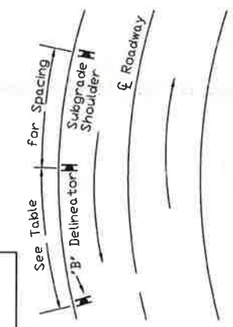

PLAN ON CURVES

Delineator to be placed on inside of curves on high fills only. Space same as high fills on tangent.

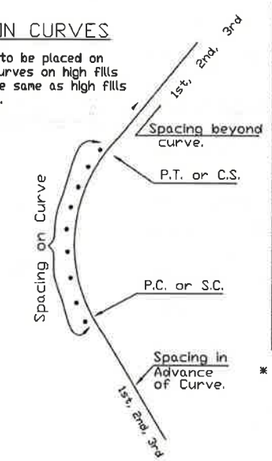

NOTE:

Other Delineator System Support which are commercially available and which have been approved for use by the State Highway Department of the state where this project is located, may be submitted to the Construction Manager. for consideration as alternate to the Delineator System shown on the plans.

DEGREE OF CURVE	RADIUS IN FEET	SPACING ON CURVE*	SPACING IN ADVANCE AND BEYOND CURVE		
			1st Space	2nd Space	3rd Space
1°00'	5730	226'	300'	300'	300'
1°30'	3820	184'	300'	300'	300'
2°00'	2865	159'	300'	300'	300'
2°30'	2292	142'	284'	300'	300'
3°00'	1910	129'	258'	300'	300'
3°30'	1638	120'	240'	300'	300'
4°00'	1432	112'	224'	300'	300'
4°30'	1274	105'	210'	300'	300'
5°00'	1146	99'	198'	297'	300'
6°00'	955	90'	180'	270'	300'
7°00'	818	83'	166'	249'	300'
8°00'	716	77'	154'	231'	300'
9°00'	636	73'	146'	219'	300'
10°00'	573	69'	138'	207'	300'
12°00'	478	62'	124'	186'	300'
15°00'	382	55'	110'	165'	300'
18°00'	318	49'	98'	147'	294'

* For spacing on curve $S=3\sqrt{R-50}$ where R=radius in feet. 1st. Space = 2(S), 2nd. Space = 3(S), 3rd = 6(S). but not to exceed 300'. Minimum spacing = 20 feet.

GLASS FIBER TYPE DELINEATOR AND OBJECT MARKER

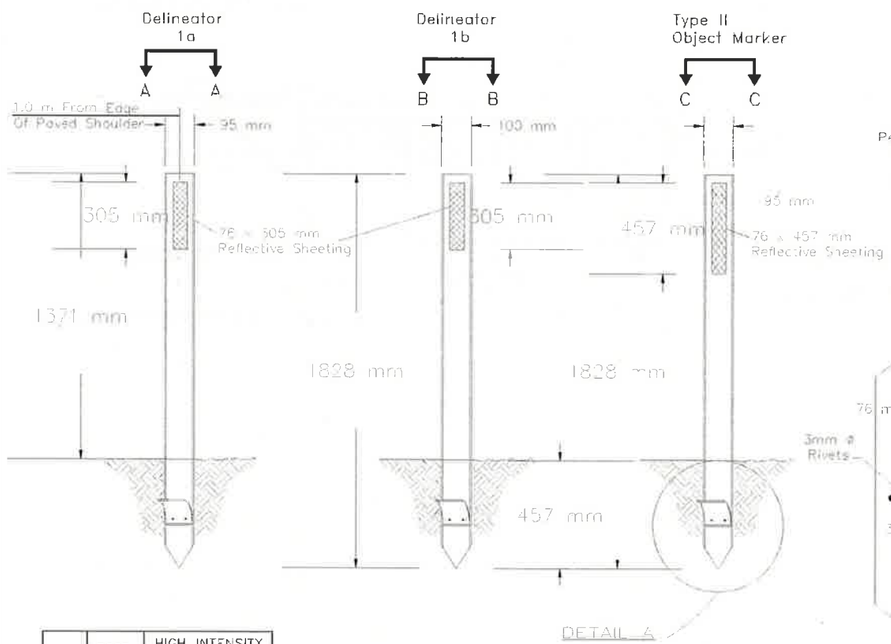

SECTION A-A & C-C

SECTION B-B

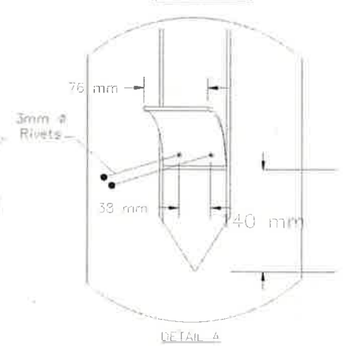

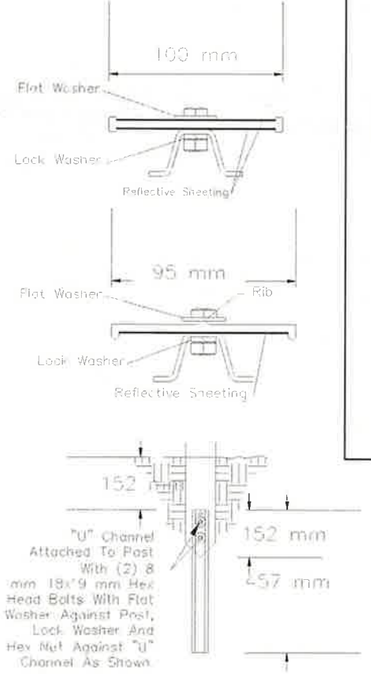

ALTERNATE DETAIL

TYPE	POST COLOR	HIGH INTENSITY REFLECTIVE SHEETING
1a	WHITE	WHITE, ONE SIDE
1b	WHITE	WHITE, BOTH SIDES
2	YELLOW	AMBER, ONE SIDE

NOTE:

The Contractor shall use glass fiber type highway delineators. The cost of supplying materials and installation of U-channel shall be included in the unit price bid under Items 63306-2000, 63309-0010, and 63309-0020.

NOTE: THIS DETAIL IS METRIC

NAVAJO DIVISION OF TRANSPORTATION

BIA STANDARD DELINEATORS OBJECT MARKER & GUIDE POSTS DETAILS

Designed by: MKC	Date: 7/19	NAVAJO D.O.T
Drawn by: ELO	Date: 7/19	
Checked by: DDM	Date: 7/19	
File Name: C-CONSTRUCT STD N5012.DWG		

M:\TRN\17-100-090-10\2_DISCIPLINES_SHEETS\STANDARD DWGS\C-CONSTRUCT STD N5012.DWG 1/30/2020 5:17 PM

REGION	STATE	RESERVATION	ROUTE NO.	PROJECT NO.	SHEET NO.	TOTAL SHEETS
NORTH	NEW MEXICO	NAVAJO	N5012	N5012(1)1,2&4	56A	75

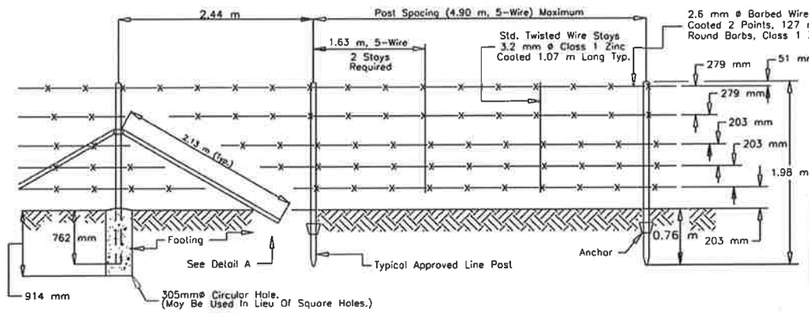

STANDARD 5 LINE GALVANIZED BARBED WIRE PANEL

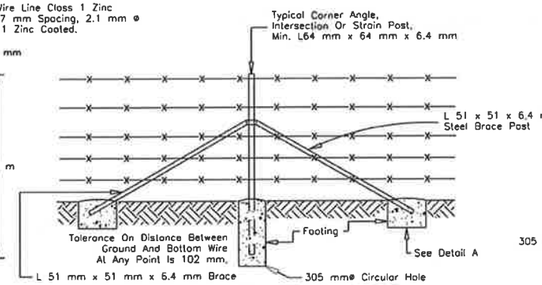

STANDARD STRAIN POST

To Be Placed @ 198 m Max. Intervals. Strain Posts With Braces Shall Be Installed At All Corners (R/W Corners Etc.) And Angles Exceeding 15° And Fence Intersections. A Third Brace, In Line With Cross Fence, Required At Intersection.

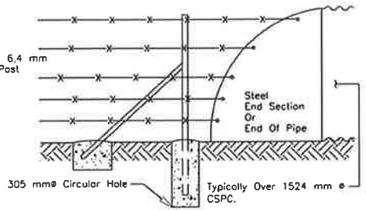

WING FENCE

Detail For Corrugated Metal Culvert

TYPICAL STEEL POST SECTION

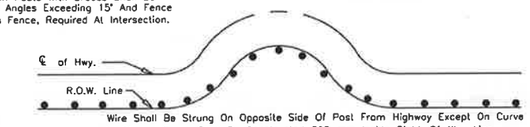

Wire Shall Be Strung On Opposite Side Of Post From Highway Except On Curve As Shown. Fence Shall Be Constructed 305 mm Inside Right-Of-Way Line.

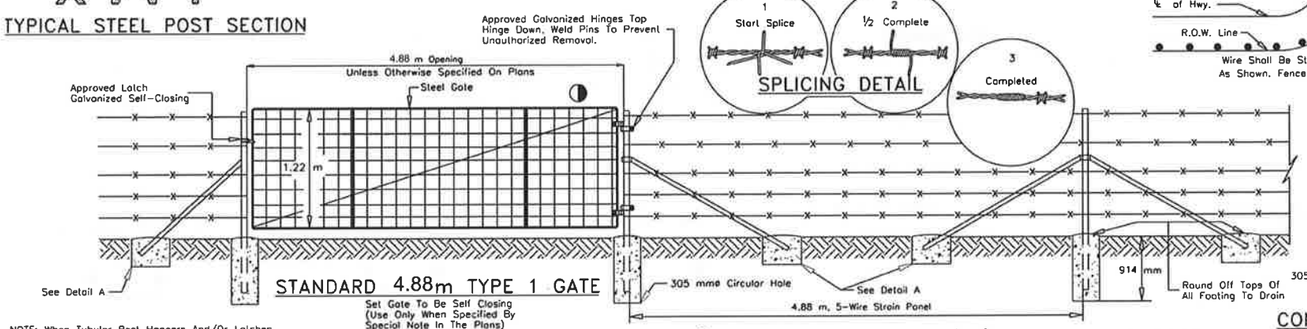

STANDARD 4.88m TYPE 1 GATE

Set Gate To Be Self Closing (Use Only When Specified By Special Note In The Plans)

NOTE: When Tubular Post Hangers And/Or Latches Are Used, It Shall Be Drilled For A Single 2.38 mm ø Min. Drive Pin To Prevent Rotation Of The Hangers And/Or Latches.

For Gate Details At Cattle guard Location See Standard Cattle guard Drawings.

◑ 35 mm ø Tubing 2 Vert. Braces Mesh □, △, ◇, 3.2 mm ø Line Wires 2.6 mm ø Crosswires. 1 Adjustable Diagonal Guy Fully Galvanized.

END POST

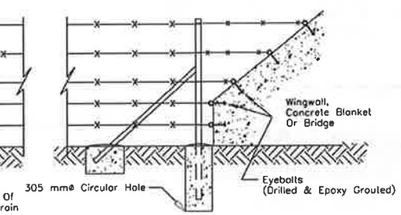

CONNECTION TO MAJOR STRUCTURES

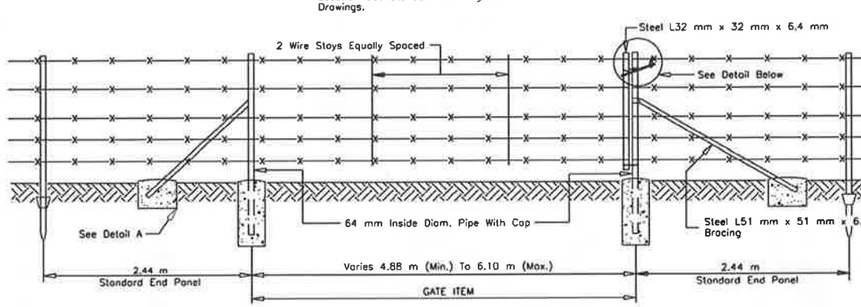

STANDARD TYPE-2 GATE

Use At Locations Noted On Plans

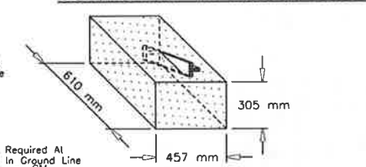

DETAIL A

Concrete Footing For Corner And Strain Posts.

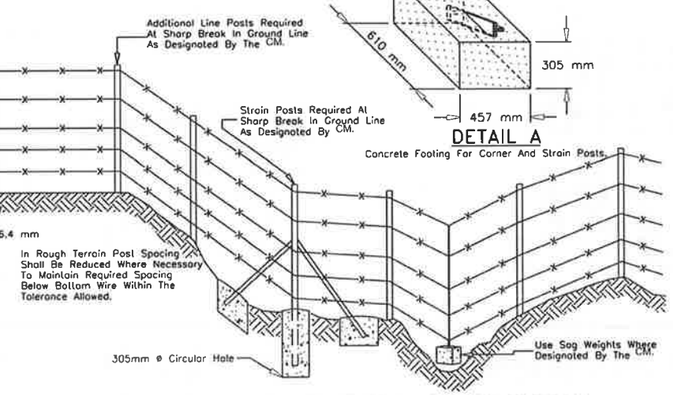

FENCE PROFILE IN ROUGH TERRAIN

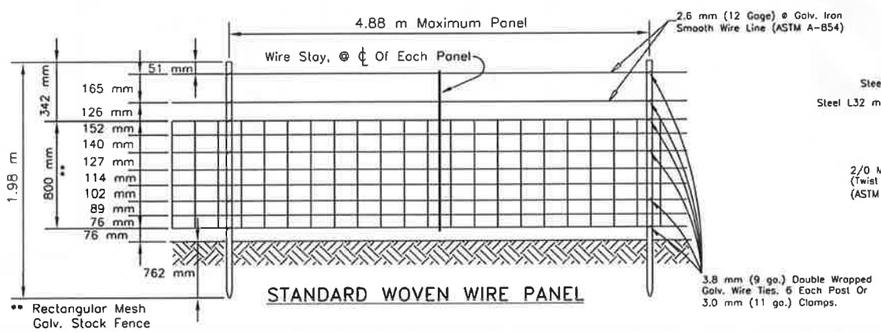

** Rectangular Mesh Galv. Stock Fence

STANDARD WOVEN WIRE PANEL

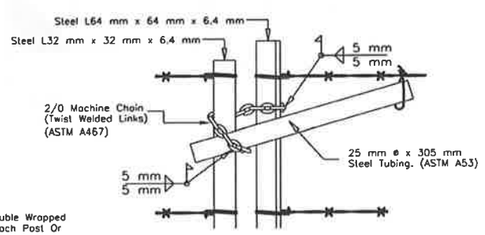

GATE SECURING DETAIL

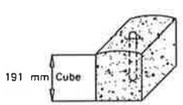

CONCRETE SAG WEIGHT DETAIL

Min. Weight Of Concrete Sag Shall Be 16 kg.

38 mm x 127 mm Doubled And Twisted 3.8 mm (Diam.) Wire Loop Centerd In Block. 25.4 mm Projection Twisted Ends Down.

GENERAL NOTES

1. CORNER, GATE, INTERMEDIATE BRACE POSTS AND LINE POSTS SHALL BE EITHER GALVANIZED OR PAINTED IN ACCORDANCE WITH AASHTO M 281-96. METAL POST AND BRACES SHALL BE FABRICATED FROM RAIL, BILLET, OR COMMERCIAL GRADE STEEL CONFORMING WITH THE REQUIREMENT OF ASTM A 702.
2. LINE POSTS SHALL BE FABRICATED IN ACCORDANCE WITH AASHTO M 281-96, AND SHALL A NOMINAL WEIGHT OF 1.98 kg/m EXCLUSIVE OF ANCHOR PLATES. ANCHOR PLATES SHALL BE CLAMPED, WELDED OR RIVETED TO THE SECTION IN SUCH A MANNER AS TO PREVENT DISPLACEMENT WHEN THE POSTS ARE DRIVEN.
3. WHEN LINE POST ANCHORS ARE OMITTED, DUE TO CHANGE IN SOIL CONDITIONS SUCH AS ROCK, THEN THE POSTS SHALL BE SET IN CONCRETE. THIS WORK SHALL BE CONSIDERED INCIDENTAL TO ITEM 61901-1000.
4. TIE WIRE, WIRE FASTENERS OR WIRE CLIPS FOR FASTENING BARBED AND WOVEN FABRIC FENCING TO THE STEEL POSTS SHALL BE 3.0 mm DIA. (11 GAGE) STEEL WIRE, CLASS 1 (ZINC COATED), SOFT TEMPER AND MEET THE REQUIREMENTS OF ASTM A 641. FURNISHING AND PLACEMENT OF FASTENERS SHALL BE INCLUDED WITH ITEM 61901-1000.
5. CONCRETE FOR ANCHORS, POST HOLES, ETC. SHALL HAVE A MINIMUM COMPRESSIVE STRENGTH OF 20.7 MPa IN 28 DAYS AND SHALL CONFORM TO SECTION 601 OF THE FP-14. FURNISHING AND PLACEMENT OF CONCRETE SHALL BE INCLUDED WITH ITEM 61901-1000.
6. TWO SPLICES ON THE SAME LINE BETWEEN THE STRAIN POST ASSEMBLIES SHALL NOT BE PERMITTED. NO SPLICES SHALL BE PLACED CLOSER THAN 30 METER OF ANY POST ASSEMBLIES.
7. CONNECT ALL R.O.W. FENCING TO CATTLEGUARDS, CULVERTS (GREATER THAN 1524 mm DIA.), AND CONCRETE STRUCTURES AS SHOWN ON THESE PLANS, AND/OR AS DIRECTED BY THE CM.
8. ANY CONFLICT IN PLACEMENT OF THE R/W FENCING AT DRAINAGE PIPE LOCATION, DUE TO NARROW R/W WIDTH OR OTHER CONSTRICTIONS, THE FENCE MAY BE PLACED OVER THE DRAINAGE STRUCTURE. THIS WORK SHALL BE CONSIDERED INCIDENTAL TO ITEM 61901-1000.
9. CLEARING AND GRUBBING SHALL INCLUDE SHAPING AND/OR REMOVAL OF SMALL MOUNDS NECESSARY TO PRESENT A SMOOTH UNIFORM APPEARANCE OF BOTH GROUND AND FENCING LINE. THIS WORK SHALL BE INCIDENTAL TO THE INSTALLATION OF FENCING AND NO ADDITIONAL PAYMENT SHALL BE MADE.
10. ALL DRILLING INTO ROCK MATERIAL, ETC. SHALL BE INCIDENTAL TO THE INSTALLATION OF FENCING AND NO ADDITIONAL PAYMENT SHALL BE MADE.
11. GATE CLOSURE DEVICE SHALL BE STEEL PIPE, NPS 3/4 (26.7 mmø) SCHEDULE 40, CONFORMING TO THE REQUIREMENT OF ASTM A 53. THE GATE CLOSURE STEEL CHAIN SHALL BE WELDED TO THE STEEL PIPE AND ANGLE IRON FENCE POST. THIS WORK SHALL BE INCIDENTAL TO THE INSTALLATION OF FENCING AND NO ADDITIONAL PAYMENT SHALL BE MADE.
12. CONTRACTOR SHALL BE REQUIRED TO INSTALL SAG WEIGHTS WHERE VERTICAL CLEARANCE BETWEEN THE BOTTOM WIRE AND NATURAL GROUND IS 610 mm OR GREATER. THIS WORK SHALL BE INCIDENTAL TO THE INSTALLATION OF FENCING.
13. CONTRACTOR MUST COORDIANTE WITH THE LAND OWNERS WHEN REMOVING THE EXISTING FENCES.

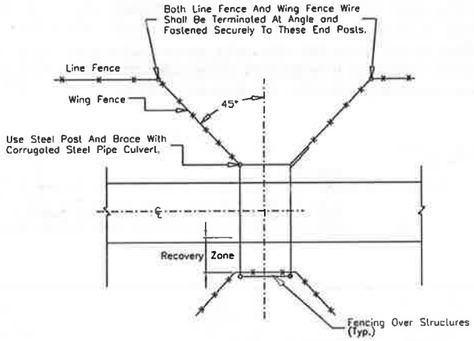

WING FENCE DETAIL

NOTE: THIS DETAIL IS METRIC

UNITED STATES
DEPARTMENT OF THE INTERIOR
BUREAU OF INDIAN AFFAIRS
NAVAJO REGIONAL OFFICE * DIVISION OF TRANSPORTATION

STANDARD FENCING DETAILS

DRAWN BY: NRDOT	DATE: 02/2015
DESIGNED BY: NRDOT	DATE: 02/2015
REVISED: --/----	BY: DESIGN 1
$FILES$	

M:\TRN\17-100-090-10\2_DISCIPLINES_SHEETS\STANDARD DWGS\C-CONSTRUCT STD N5012.DWG1/30/2020 5:01 PM

REGION	STATE	RESERVATION	ROUTE NO.	PROJECT NO.	SHEET NO.	TOTAL SHEETS
NORTH	NEW MEXICO	NAVAJO	N5012	N5012(1)1,2&4	56B	75

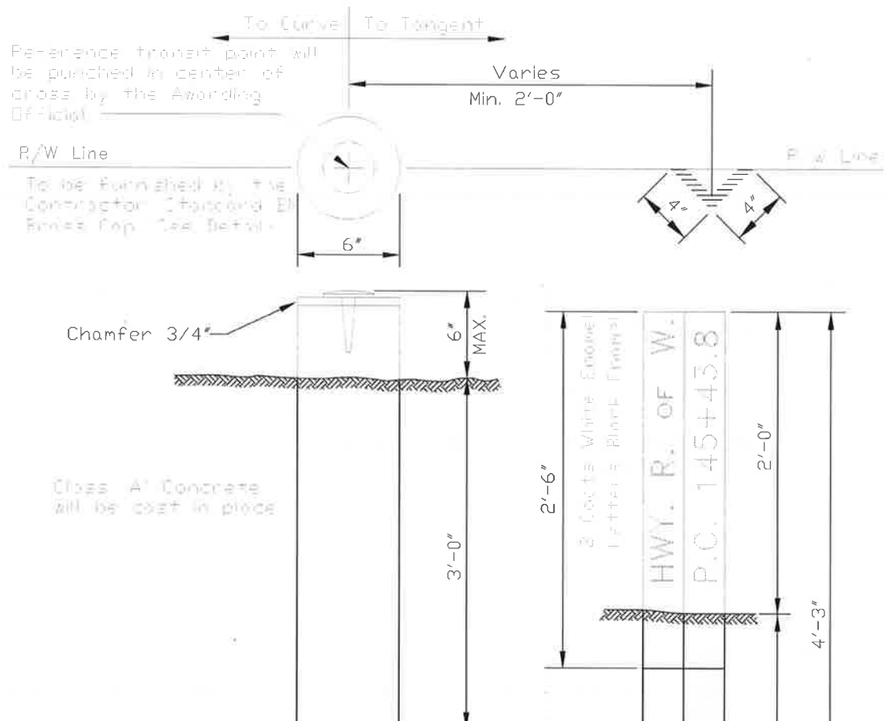

TRANSIT POINT MAP-EP

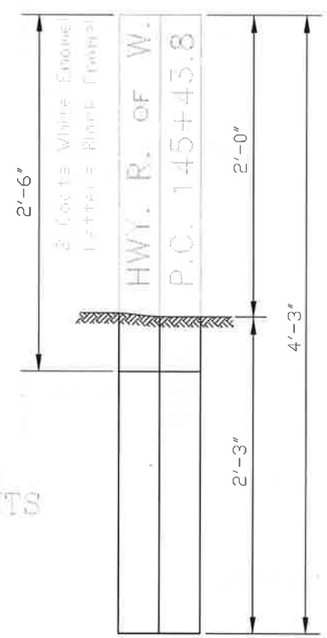

REFERENCE MARKER

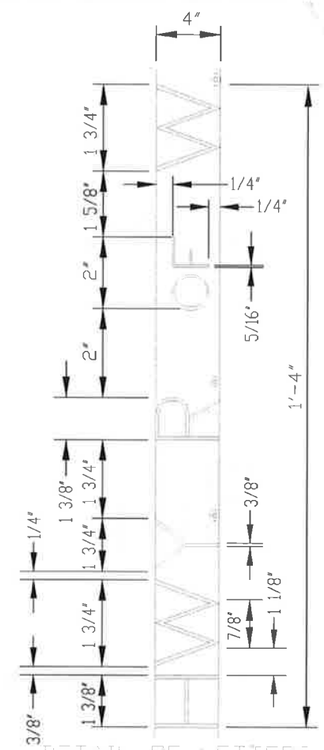

DETAIL OF LETTERS

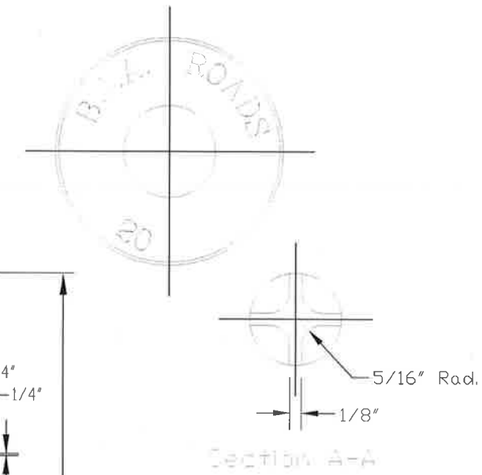

Section A-A

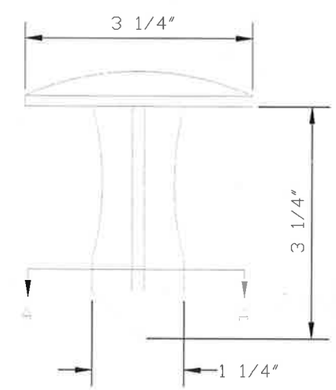

STANDARD BRASS CAP DETAIL

RIGHT-OF-WAY MONUMENTS

Complete in place, including Brass Cap.

Note:

R/W monuments will be placed where shown on plans or as directed by the Contracting Officer. R/W monuments will consist of transit point and reference marker.

UNITED STATES
DEPARTMENT OF THE INTERIOR
BUREAU OF INDIAN AFFAIRS
NAVAJO REGIONAL OFFICE * DIVISION OF TRANSPORTATION

ROW MONUMENTS AND MARKER DETAILS

DRAWN BY: NRDOT	DATE: 07/2015
DESIGNED BY: NRDOT	DATE: 2/9/2015
REVISED: --/----	BY: DESIGN 1
$FILES$	

M:\TRN\17-100-090-10\2_DISCIPLINES_SHEETS\STANDARD DWGS\C-CONSTRUCT STD N5012.DWG1/30/2020 5:01 PM

REGION	STATE	RESERVATION	ROUTE NO.	PROJECT NO.	SHEET NO.	TOTAL SHEETS
NORTH	NEW MEXICO	NAVAJO	N5012	N5012(1)1,2&4	57A	75

SQUARE TUBE SELECTION, SINGLE POST - 2.80 mm THICKNESS

POST SIZE	H = C + D/2 (meter)						SLEEVE SIZE
	1.52	1.83	2.13	2.44	2.74	<--- H (m)	
38 mm x 38 mm	0.51	0.43	0.37	0.31	n/a	MAXIMUM SIGN AREA (m^2)	44 mm x 44 mm
44 mm x 44 mm	0.81	0.68	0.58	0.47	0.41		50 mm x 50 mm
50 mm x 50 mm	1.14	0.95	0.84	0.70	0.58		57 mm x 57 mm
57 mm x 57 mm	1.49	1.27	1.07	0.95	0.84		64 mm x 64 mm
64 mm x 64 mm	1.88	1.68	1.41	1.25	1.07		70 mm x 70 mm

SQUARE TUBE SELECTION, DOUBLE POST - 2.80 mm THICKNESS

POST SIZE	H = C + D/2 (meter)						SLEEVE SIZE
	1.52	1.83	2.13	2.44	2.74	<--- H (m)	
57 mm x 57 mm	n/a	n/a	2.15	1.97	1.81	MAXIMUM SIGN AREA (m^2)	64 mm x 64 mm
64 mm x 64 mm	n/a	n/a	2.68	2.46	2.26		70 mm x 70 mm

SQUARE TUBE SELECTION, TRIPLE POST - 2.80 mm THICKNESS

POST SIZE	H = C + D/2 (meter)						SLEEVE SIZE
	1.52	1.83	2.13	2.44	2.74	<--- H (m)	
57 mm x 57 mm	n/a	n/a	3.08	2.83	2.61	MAXIMUM SIGN AREA (m^2)	64 mm x 64 mm
64 mm x 64 mm	n/a	n/a	3.82	3.52	3.26		70 mm x 70 mm

GUIDE SIGN POST DIMENSIONS

(NOT FOR USE WITH WARNING, REGULATORY OR MARKER PANELS)

PANEL WIDTH	914 mm	1.22 m	1.52 m	1.83 m	2.13 m	2.44 m	2.74 m	3.05 m
TWO POSTS SPACING (A)	559 mm	711 mm	914 mm	1.12 m	1.27 m	1.47 m	1.63 m	1.83 m
BOLTS TO PANEL (PER STRINGER)	-	-	3	3	3	3	4	4
LENGTH OF EACH STRINGER	-	-	1.22 m	1.42 m	1.57 m	1.78 m	1.93 m	2.13 m
TWO POSTS SPACING (B)	-	-	533 mm	635 mm	737 mm	864 mm	965 mm	1.07 m
BOLTS TO PANEL (PER STRINGER)	-	-	3	3	3	4	4	4
LENGTH OF EACH STRINGER	-	-	1.37 m	1.57 m	1.78 m	2.03 m	2.24 m	2.44 m

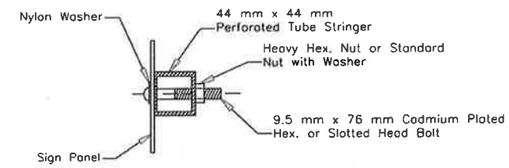

PANEL TO STRINGER OR POST

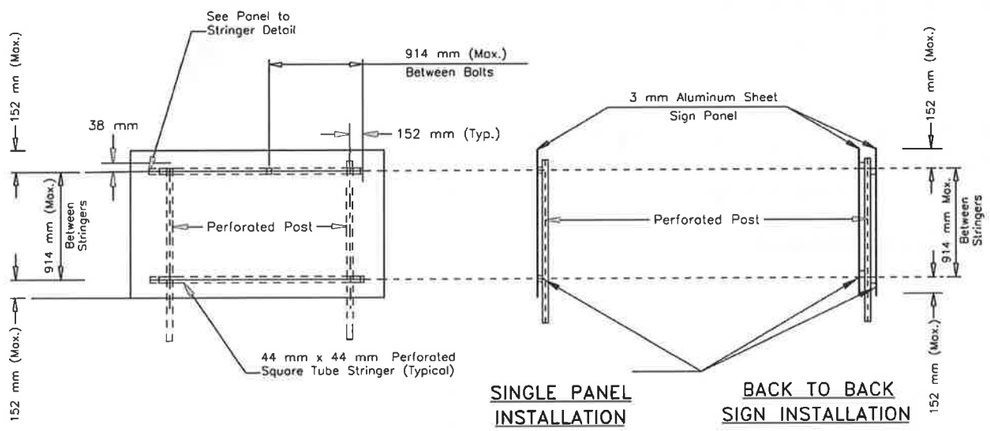

SINGLE PANEL INSTALLATION

BACK TO BACK SIGN INSTALLATION

STRINGER DETAILS (FOR GUIDE SIGNS UP TO AND INCLUDING 3.05 mm WIDE)

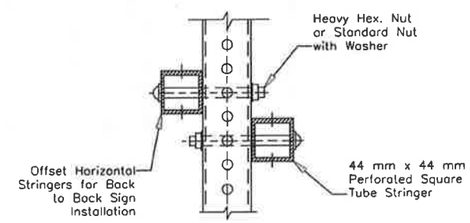

STRINGER TO POST

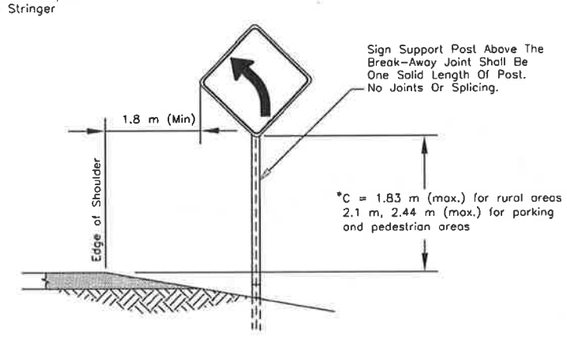

TYPICAL ROADSIDE SIGN LOCATION

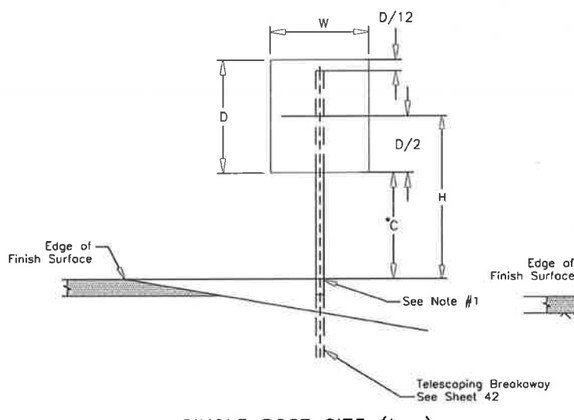

SINGLE POST SIZE (typ.)

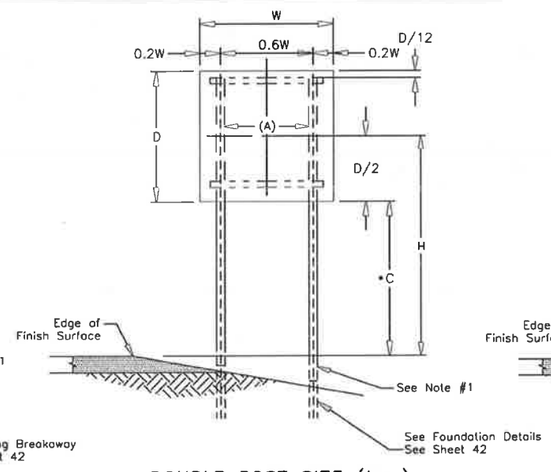

DOUBLE POST SIZE (typ.)

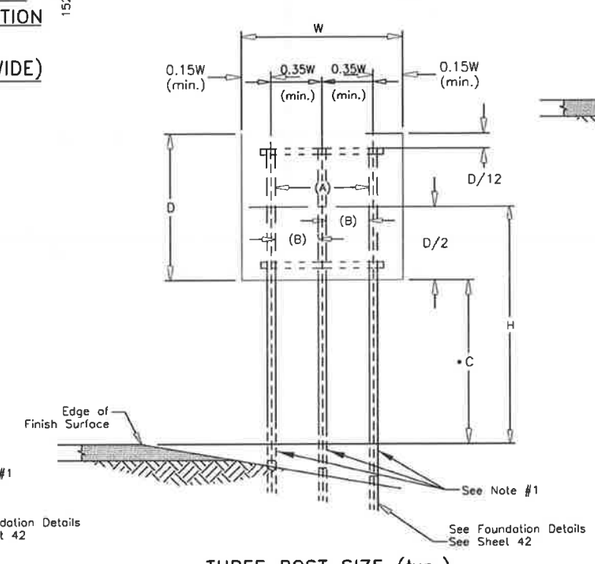

THREE POST SIZE (typ.)

GENERAL NOTES:

1. THE CONTRACTOR SHALL BE REQUIRED TO ADJUST THE LENGTH OF SIGN SUPPORT POST(S). THIS WORK SHALL BE INCLUDED IN THE UNIT PRICE FOR THE APPROPRIATE BID ITEMS SHOWN IN THE BID SCHEDULE.
2. SIGNS GREATER THAN 762 mm IN WIDTH SHALL BE MOUNTED ON TWO OR MORE POSTS.
3. CONCRETE FOUNDATION SHOULD NOT BE USED IN LOCATIONS PROTECTED BY GUARDRAIL,BARRIER, OR OUTSIDE THE CLEAR ZONE.
4. STEEL POSTS SHALL BE UNIFORM DESIGN. THE POST SHALL BE PUNCHED WITH CONTINOUS 9mm HOLES ON 25mm INTERVAL ON CENTERS FOR THE ENTIRE LENGTH OF POST.
5. STEEL POSTS SHALL BE MACHINED STRAIGHTENED TO HAVE A SMOOTH UNIFORM FINISH, FREE FROM DEFECTS AFFECTING STRENGTH, DURABILITY, AND APPEARANCE. ALL HOLES AND EDGES SHALL BE FREE OF BURRS. THE PERMISSABLE TOLERANCE FOR STRAIGHTNESS SHALL BE WITHIN 6.35mm IN 1.52 METER.
6. STEEL POSTS SHALL BE GALVANIZED AFTER FABRICATION IN ACCORDANCE WITH ASTM 123. BOLTS, NUTS, AND WASHERS SHALL BE CADMIUM PLATED IN ACCORDANCE WITH ASTM A-165 OR ZINC PLATED IN ACCORDANCE WITH ASTM B-633.
7. SPLICE HARDWARE SHALL CONSIST OF TWO FULLY THREADED, 8mm X 38mm GRADE-9 PLATED HEX HEAD BOLTS, FLAT WASHERS, AND SELF LOCKING HEX NUTS PER POST. IN ADDITION, ONE 19mm X 127mm PLATED SPACER BAR PER POST, TO STIFFEN THE SPLICE CONNECTION. EACH SPACER SHALL BE DRILLED AND TAPPED WITH 8mm-18 UNC THREADS. THE SPACER SHALL BE FABRICATED FROM HOT ROLLED CARBON STEEL BAR CONFORMING TO ASTM A-36 OR M-1020.
8. BOLTS AND LOCK NUT HARDWARE FOR SIGN ATTACHMENT SHALL BE CARRIAGE HEAD TYPE, 8mm-18 UNC, AND SHALL BE CADMIUM PLATED CONFORMING TO ASTM B-766.
9. AN APPROVED ALTERNATE BREAKAWAY SYSTEM AND SIGN SUPPORT POST ASSEMBLY MAY BE SUBMITTED TO THE CM. FOR REVIEW AND APPROVAL. PRIOR TO IT'S USE.
10. THE CONTRACTOR HAS THE OPTION TO USE "ANTI-THIEF" NUTS IN LIEU OF JAMMING THE BOLT THREADS. NO ADDITIONAL PAYMENT WILL BE MADE IN RELATION TO USING ANTI-THIEF BOLTS.

NOTE: THIS DETAIL IS METRIC

UNITED STATES
DEPARTMENT OF THE INTERIOR
BUREAU OF INDIAN AFFAIRS
NAVAJO REGIONAL OFFICE * DIVISION OF TRANSPORTATION

SQUARE TUBE POST SELECTION AND SIGN MOUNTING DETAILS

DRAWN BY: NRDOT	DATE: 02/2015
DESIGNED BY: NRDOT	DATE: 02/2015
REVISED: --/----	BY: DESIGN 1
$FILES$	

M:\TRN\17-100-090-10\2_DISCIPLINES_SHEETS\STANDARD DWGS\C-CONSTRUCT STD N5012.DWG1/30/2020 5:01 PM

REGION	STATE	RESERVATION	ROUTE NO.	PROJECT NO.	SHEET NO.	TOTAL SHEETS
NORTH	NEW MEXICO	NAVAJO	N5012	N5012(1)1,2&4	57B	75

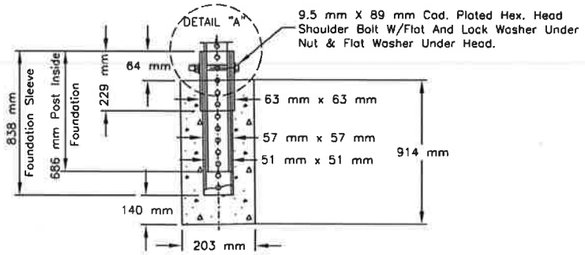

SINGLE POST FOUNDATION DETAIL

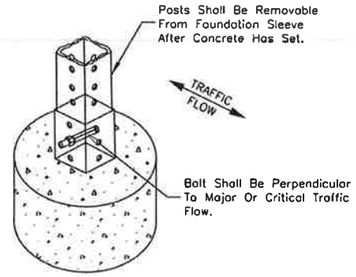

DETAIL "A"

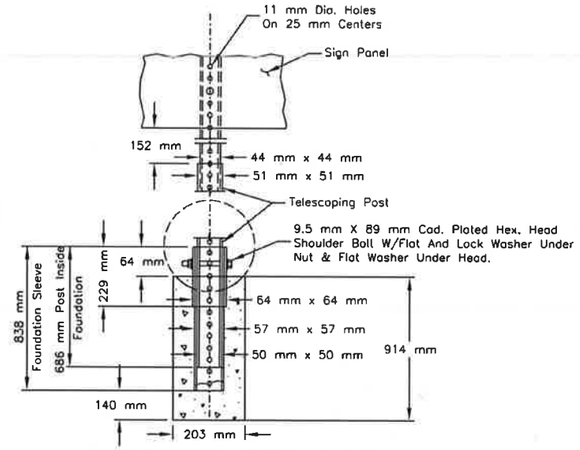

TELESCOPING POST DETAIL

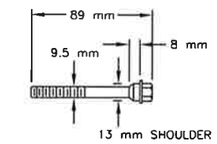

SHOULDER BOLT (HEAD)

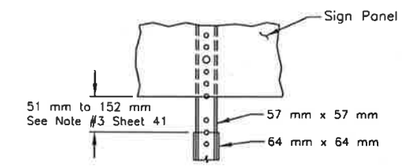

TELESCOPING POST INSTALLATION

STOP SIGN AND LINE LOCATION TABLE

RADIUS OF TURNOUT (m)	X (m)	Y' (m)	Y (m) = Y' + LO (m)	LENGTH of STOP BAR
3.00	1.80	0.25	2.05	1/2 ROADWAY WIDTH + Y'
6.00	3.00	0.80	2.60	1/2 ROADWAY WIDTH + Y'
9.00	4.50	1.21	3.01	1/2 ROADWAY WIDTH + Y'
12.00	6.00	1.61	3.41	1/2 ROADWAY WIDTH + Y'
15.00	7.50	2.01	3.81	1/2 ROADWAY WIDTH + Y'

Y' = DISTANCE FROM ROADWAY EOP TO RADIUS EOP LATERAL OFFSET (LO) FROM EOP (m) = 180

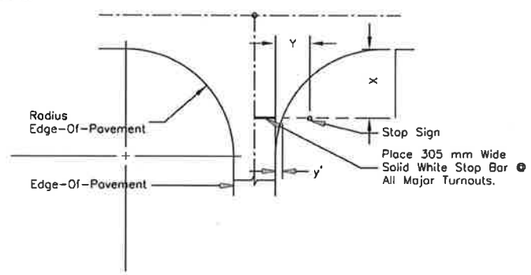

STOP SIGN LOCATION AT INTERSECTION

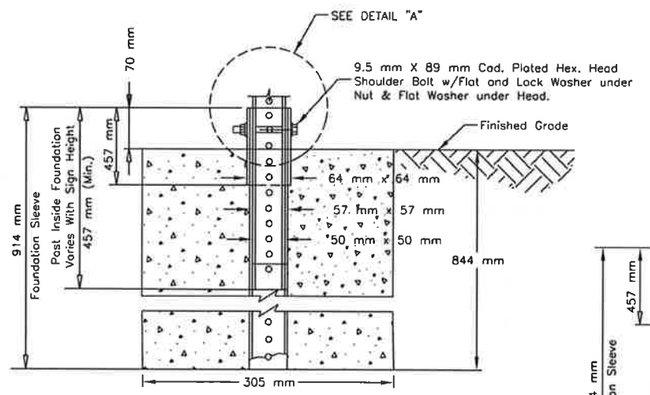

51 mm SINGLE POST CONCRETE FOUNDATION DETAIL (IN WEAK SOILS)

See Sheet 41 For General Notes

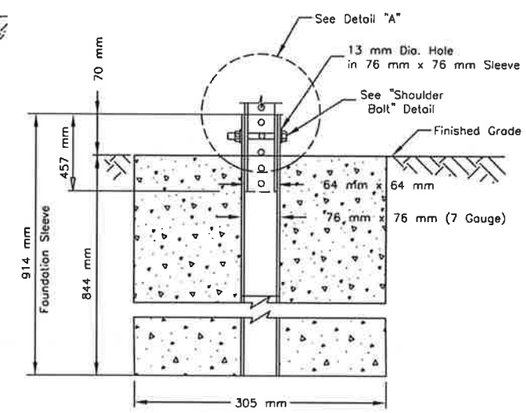

64 mm SINGLE POST CONCRETE FOUNDATION DETAIL (IN WEAK SOILS)

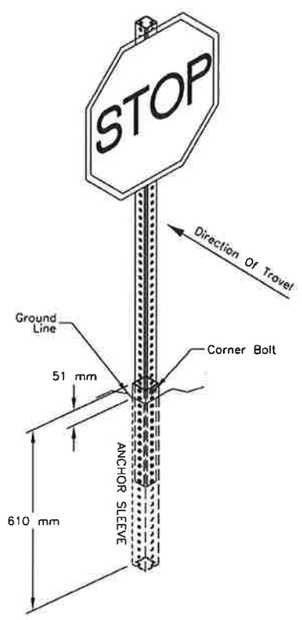

ISOMETRIC VIEW

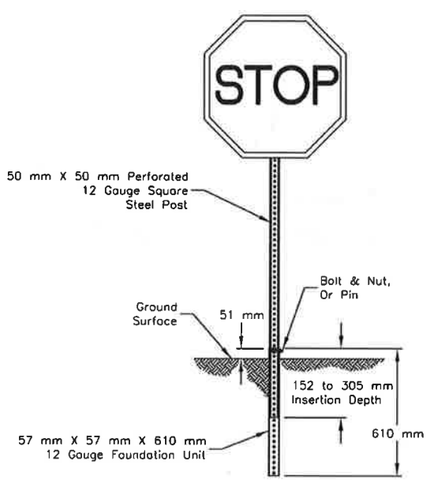

TELESCOPING BREAKAWAY ASSEMBLY

(Single Post)

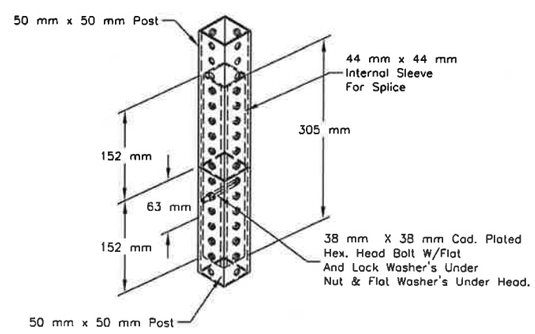

SINGLE POST PERMISSIBLE FIELD SPLICE

(Not Allowed On Telescoping Post)

NOTE: THIS DETAIL IS METRIC

UNITED STATES
DEPARTMENT OF THE INTERIOR
BUREAU OF INDIAN AFFAIRS
NAVAJO REGIONAL OFFICE * DIVISION OF TRANSPORTATION

POST SELECTION AND SIGN MOUNTING DETAILS

DRAWN BY: NRDOT	DATE: 02/2015
DESIGNED BY: NRDOT	DATE: 02/2015
REVISED: --/----	BY: DESIGN 1
$FILES$	

M:\TRN\17-100-090-10\2_DISCIPLINES_SHEETS\STANDARD DWGS\C-CONSTRUCT STD N5012.DWG 1/30/2020 5:01 PM

REGION	STATE	RESERVATION	ROUTE	PROJECT NO.	SHEET	TOTAL SHEETS
NORTH	NEW MEXICO	NAVAJO	N5012	N5012(1)1,2&4	57C	75

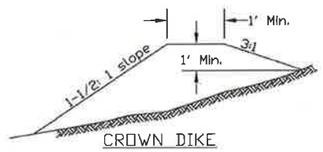

CROWN DIKE

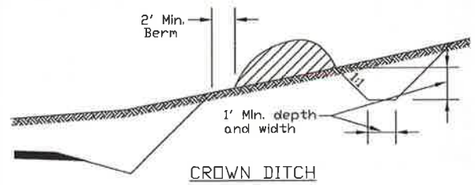

CROWN DITCH

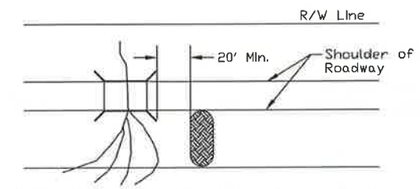

TYPICAL DIKE INSTALLATION AT STRUCTURE

Dikes of structures to be placed so that they create a water barrier.

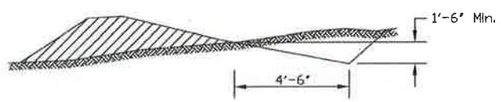

GRADER DITCH (FURROW DITCH)

Grader ditch section may be used or a ditch similar to above may be made in any manner approved by the CM.

NOTE:
Contour ditch are to be laid out along the ground contour on a grade that will prevent erosion. (Type of soil will govern the grade.)

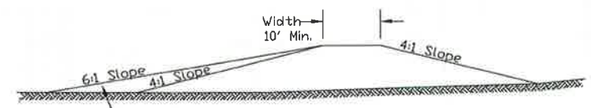

TYPE "B" DIKE

When necessary the slope may be flattened to 6:1 with bit. mix or soil cement protection as called for on plans.

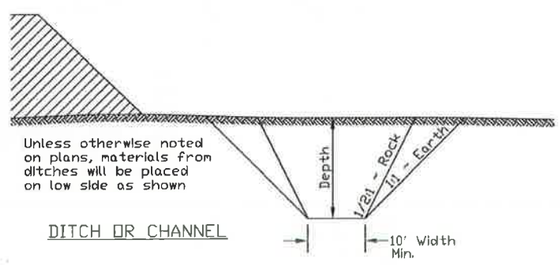

DITCH OR CHANNEL

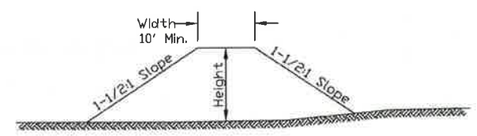

DIMENSIONS OF DITCHES AND DIKES as shown on plans are respectively width, depth of height and length.

TYPE "A" DIKE

NAVAJO DIVISION OF TRANSPORTATION

DITCH & DIKES STANDARD DETAILS

Designed by: WKC	Date: 7/19
Drawn by: [illegible]	Date: 7/19
Checked by: JDM	Date: 7/19
File Name: [illegible]	

NAVAJO D.O.T

M:\TRN\17-100-090-10\2_DISCIPLINES_SHEETS\STANDARD DWGS\C-CONSTRUCT STD N5012.DWG 1/30/2020 5:02 PM

REGION	STATE	RESERVATION	ROUTE	PROJECT NO.	SHEET	TOTAL SHEETS
NORTH	NEW MEXICO	NAVAJO	N5012	N5012(1)1,2&4	58	75

COUPLING BANDS FOR METAL PIPE CULVERT 1/

CORRUGATION SIZE 2/ INCHES	ROUND PIPE DIAMETER INCHES	PIPE ARCH SPAN x RISE INCHES	MINIMUM BAND WIDTH (INCHES) ANNULAR CORRUGATED BANDS 3/	HELICALLY CORRUGATED BANDS 4/	SEMI-CORRUGATED BANDS 5/
1½ x ¼	underdrain 6/	-	10.5	7	10.5
2⅔ x ½	12 to 36	17 x 13 to 42 x 29	7	12	
	42 to 72	49 x 33 to 83 x 57	10.5	12	
	78 to 84	-	10.5	12	10.5
3 x 1	36 to 72	60 x 46 to 81 x 59	12	14	10.5
	78 to 144	87 x 64 to 142 x 91	12	14	10.5
5 x 1	36 to 72	60 x 46 to 81 x 59	20	22	
	78 to 144	87 x 64 to 142 x 91	20	22	

1/ Fabricate annular, helical and semi-corrugated type coupling bands from the same metal as the connecting pipe. Provide coupling bands not more than 3 nominal sheet thicknesses thinner than the thickness of the pipe to be connected, and no thinner than 0.052 inch for steel or 0.048 inch for aluminum. Fasten coupling bands with the following diameter of bolt:
⅜" for 18" round culvert (21" x 15" pipe arch) or less
½" for 21" round culvert (24" x 18" pipe arch) or more

2/ For helically corrugated pipe with rerolled ends, the nominal corrugations size refers to the dimension of the end corrugation in the pipe.

3/ Use annular corrugated bands with pipes having annular corrugations or with helical pipe having rerolled end to form annular corrugations. A 10.5 inch band is acceptable on pipe ends rerolled with 2⅔" x ½" corrugations. A 12 inch band is acceptable on pipe ends rerolled with 3" x 1" pipe corrugations.

4/ Use helical corrugated bands with pipes having helically corrugated ends.

5/ The minimum band widths shown for 3" x 1" and 5" x 1" corrugated sizes apply to 2⅔" x ½" corrugations on rerolled pipe ends.

6/ Smooth sleeve-type couplers and flat bands may be used for pipe diameters of 12" or less. Use a matching metal having a nominal thickness of not less than 0.040 inch for steel, or 0.036 inch for aluminum, or a plastic with an equivalent strength to metal.

NOTE:

1. Watertight pipe joints are not required unless specified in the Special Contract Requirements.
2. Other types of coupling bands or fastening devices that comply with the joint performance criteria of AASHTO Standard specifications for Highway Bridges, Division II Section 26 may be used.

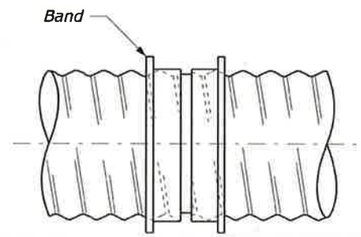

SLEEVE JOINT

Smoother sleeve with center stop.
Stab type joint

SMOOTH SLEEVE BAND

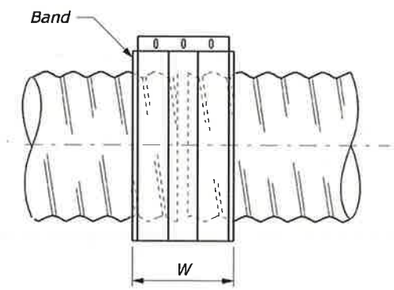

FLAT BAND

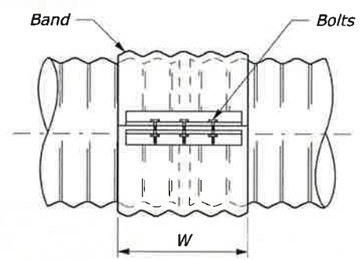

SIDE VIEW

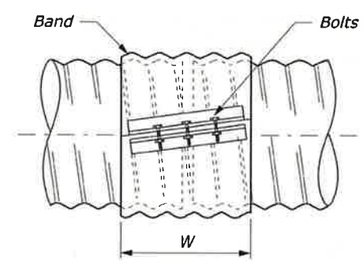

SIDE VIEW

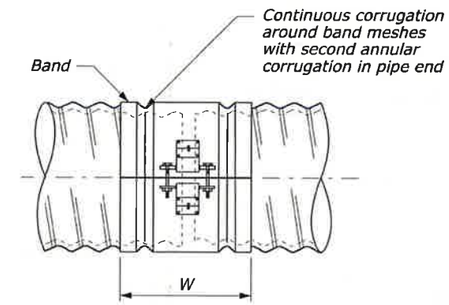

SIDE VIEW

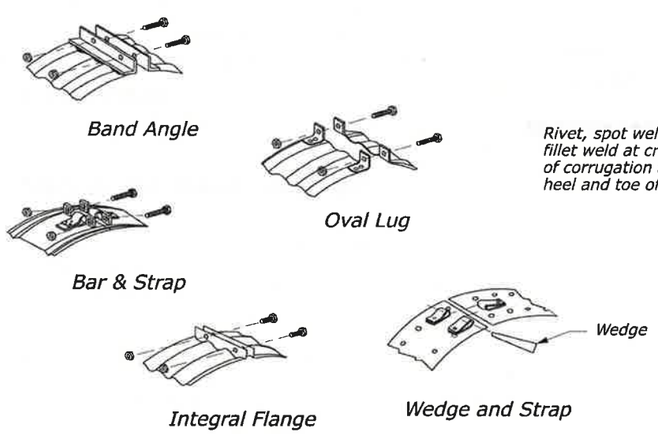

STANDARD BAND CONNECTIONS

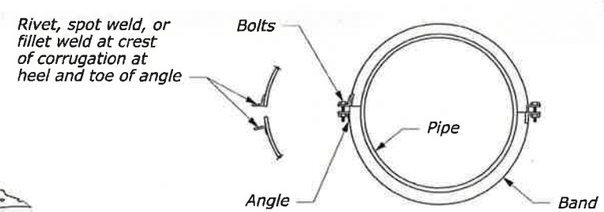

END VIEW

Second angle connection optional to 42" diameter, required above 42" diameter

ANNULAR BAND

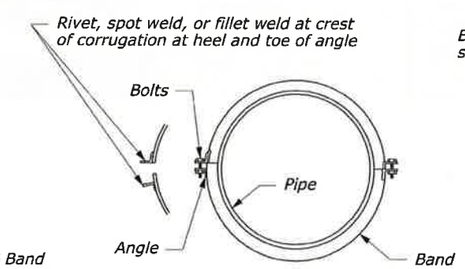

END VIEW

Second angle connection optional to 42" diameter, required above 42" diameter

HELICAL BAND

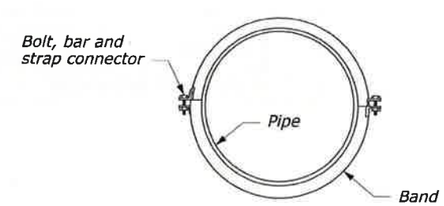

END VIEW

SEMI-CORRUGATED BAND

NO SCALE

NAVAJO DIVISION OF TRANSPORTATION

METAL PIPE CULVERT BAND
USDOT 602-2

Designed by: M&C	Date: 7/19
Drawn by: ELO	Date: 7/19
Checked by: GDM	Date: 7/19
File Name: S:\N5012\STD\N5012.DWG	

NAVAJO D.O.T

M:\TRN\17-100-090-10\2_DISCIPLINES_SHEETS\STANDARD DWGS\C-NMDOT-STD N5012.DWG 1/30/2020 5:03 PM

REGION	STATE	RESERVATION	ROUTE	PROJECT NO.	SHEET	TOTAL SHEETS
NORTH	NEW MEXICO	NAVAJO	N5012	N5012(1)1,2&4	59	75

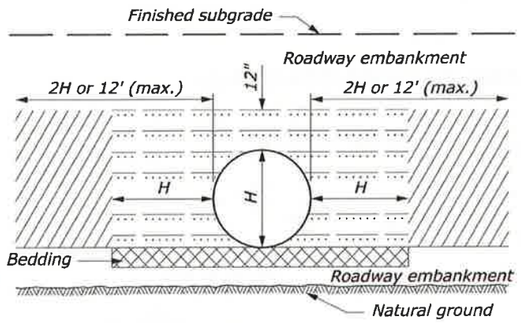

ABOVE NATURAL GROUND

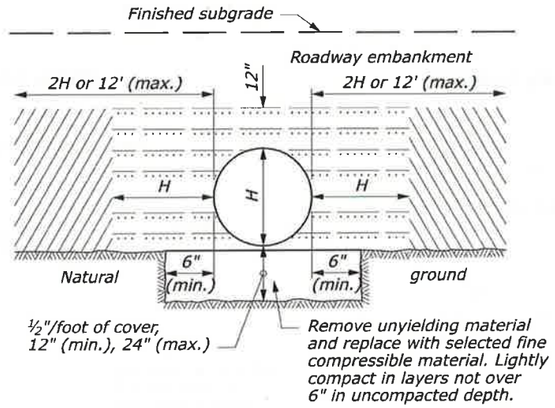

ON UNYIELDING MATERIAL

BEDDING DEPTH	
PIPE SIZE (H)	DEPTH
12" to 54"	4"
> 54"	6"

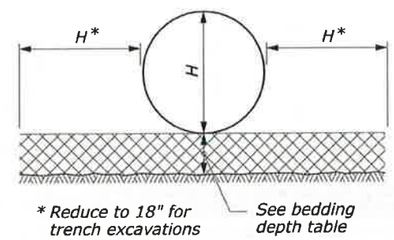

PIPE BEDDING

NOTE:

1. When directed, camber pipe culverts upward from a chord through the inlet and outlet inverts an ordinate amount equal to 1% of the pipe length. Develop camber on a parabolic curve. If the midpoint elevation on the parabolic curve as designed exceeds the elevation of the inlet invert, reduce the amount of camber or increase the pipe culvert gradient.
2. H equals the diameter of all round pipe culverts or the rise dimension of all pipe arch culverts.

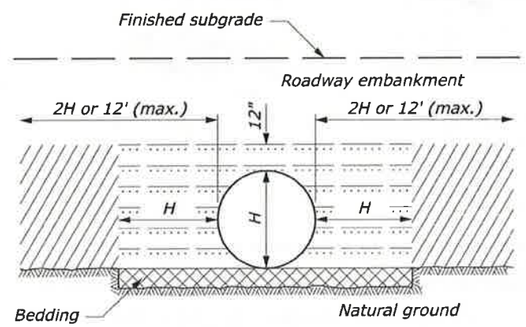

ON NATURAL GROUND

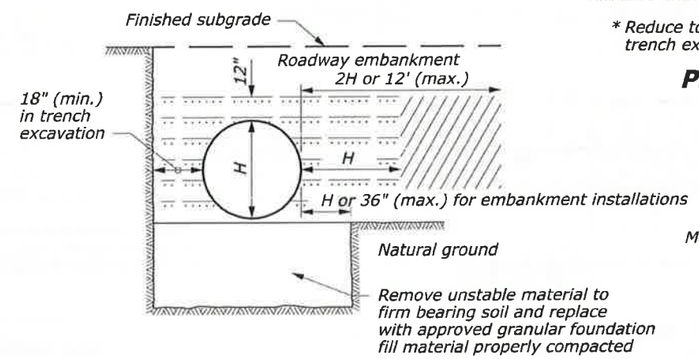

ON UNSTABLE MATERIAL

MINIMUM SPACING	
DIAMETER or SPAN	SPACING
UP to 48"	24"
48" and UP	Half diameter or span OR 36" whichever is less

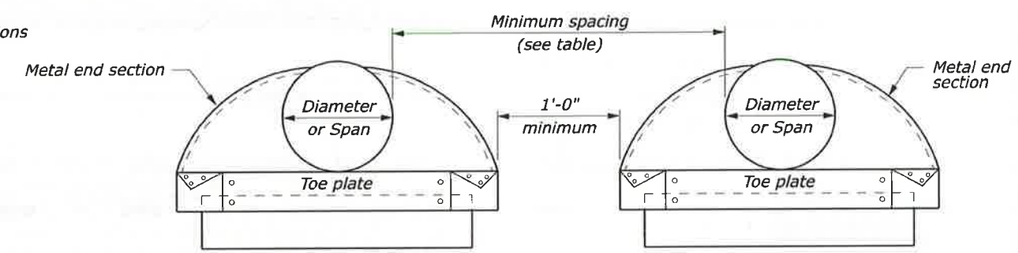

ELEVATION

MULTIPLE PIPE INSTALLATION

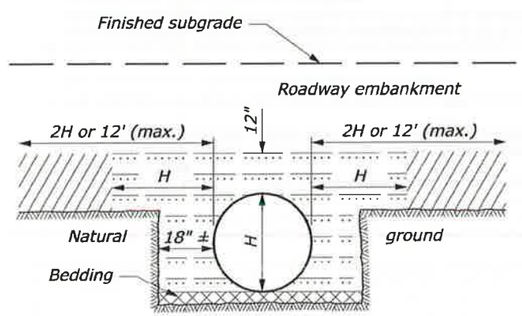

ABOVE AND BELOW NATURAL GROUND

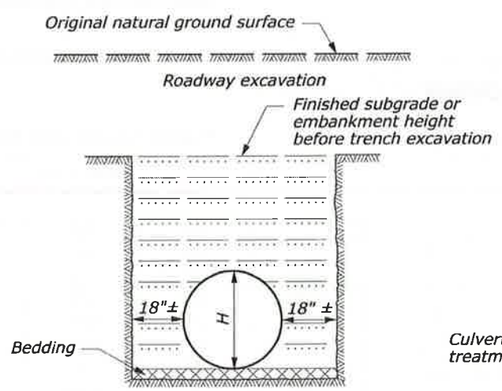

BELOW NATURAL GROUND OR TRENCH EXCAVATION IN EMBANKMENT

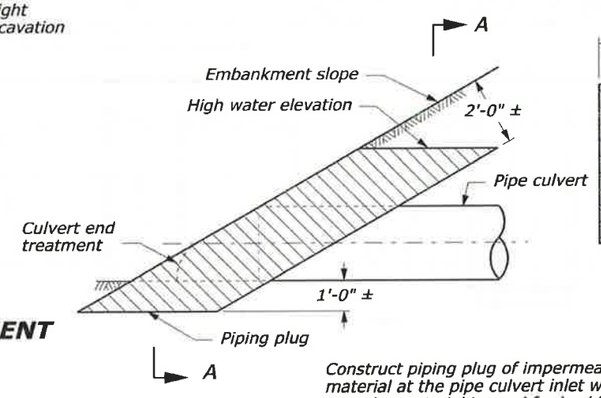

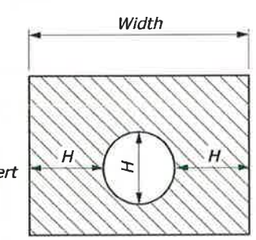

SECTION A-A

Construct piping plug of impermeable backfill material at the pipe culvert inlet where granular material is used for backfill. Width may be adjusted to tie into impervious material.

PIPING PLUG

NO SCALE

Bedding material (uncompacted)

Embankment material placed in layers not exceeding 6" compacted depth.

Compacted backfill material placed in layers not exceeding 6" compacted depth meeting the following:
Metal Pipe: Maximum particle size = 3"
Soil classification: A-1, A-2, or A-3
Plastic Pipe: Maximum particle size: 1½"
Soil classification: A-1, A-2-4, A-2-5, or A-3
Or lean concrete backfill in accordance with Section 614.

NAVAJO DIVISION OF TRANSPORTATION

METAL AND PLASTIC PIPE CULVERT BEDDING DETAILS USDOT 602-3

Designed by: MKC	Date: 7/9
Drawn by: ELO	Date: 7/9
Checked by: DDM	Date: 7/9
File Name:	

NAVAJO D.O.T

M:\TRN\17-100-090-10\2_DISCIPLINES_SHEETS\STANDARD DWGS\C-NMDOT-STD N5012.DWG 1/30/2020 5:03 PM

REGION	STATE	RESERVATION	ROUTE	PROJECT NO.	SHEET	TOTAL SHEETS
NORTH	NEW MEXICO	NAVAJO	N5012	N5012(1)1,2&4	60	75

END SECTIONS FOR ROUND PIPE CULVERT

PIPE SIZE DIAMETER INCHES	METAL THICKNESS STEEL INCHES	STEEL GAGE	ALUMINUM INCHES	ALUMINUM GAGE	DIMENSIONS INCHES A (min)	B (max)	H (min)	L (±2")	W (max)	SLOPE Approx.
12	0.064	16	0.060	16	5	7	6	21	44	2¼
15	0.064	16	0.060	16	6	8	6	26	52	2¼
18	0.064	16	0.060	16	7	10	6	31	58	2⅛
21	0.064	16	0.060	16	8	12	6	36	66	2⅛
24	0.064	16	0.060	16	9	13	6	41	72	2⅛
30	0.079	14	0.075	14	11	16	8	51	88	2⅛
36	0.079	14	0.075	14	13	19	9	60	105	2
42	0.109	12	0.105	12	15	25	10	69	122	2⅛
48	0.109	12	0.105	12	17	29	12	78	131	2
54	0.109	12	0.105	12	17	33	12	84	143	2
60	0.109	12	0.105	12	17	36	12	87	157	1⅞
66	0.109	12	0.105	12	17	39	12	87	162	1⅝
72	0.109	12	0.105	12	17	44	12	87	169	1½
78	0.109	12	0.105	12	17	48	12	87	178	1⅜
84	0.109	12	0.105	12	17	52	12	87	184	1⅓
90	0.109	12	0.105	12	17	58	12	87	188	1¼
96	0.109	12	0.105	12	17	58	12	87	197	1⅛

END SECTIONS FOR PIPE ARCH CULVERT

PIPE SIZE SPAN x RISE INCHES	METAL THICKNESS STEEL INCHES	STEEL GAGE	ALUMINUM INCHES	ALUMINUM GAGE	DIMENSIONS INCHES A (min)	B (max)	H (min)	L (±2")	W (max)	SLOPE Approx.
17 x 13	0.064	16	0.060	16	5	9	6	20	52	2⅛
21 x 15	0.064	16	0.060	16	6	11	6	24	58	2
24 x 18	0.064	16	0.060	16	7	12	6	28	58	2⅛
28 x 20	0.064	16	0.060	16	7	16	6	32	66	2
35 x 24	0.079	14	0.075	14	9	16	6	39	72	1⅞
42 x 29	0.079	14	0.075	14	11	18	7	46	88	1⅞
49 x 33	0.109	12	0.105	12	12	21	9	53	105	1¾
57 x 38	0.109	12	0.105	12	16	26	12	62	122	1⅞
60 x 46	0.109	12	0.105	12	17	36	12	70	142	1⅞
64 x 43	0.109	12	0.105	12	17	30	12	69	131	1⅞
66 x 51	0.109	12	0.105	12	17	36	12	77	156	1¾
71 x 47	0.109	12	0.105	12	17	36	12	77	143	1⅞
73 x 55	0.109	12	0.105	12	17	36	12	77	168	1½
77 x 52	0.109	12	0.105	12	17	36	12	77	157	1⅝
81 x 59	0.109	12	0.105	12	17	44	12	77	179	1⅝
83 x 57	0.109	12	0.105	12	17	44	12	77	162	1½
87 x 63	0.109	12	0.105	12	17	44	12	77	186	1½
95 x 67	0.109	12	0.105	12	17	44	12	87	210	1½
103 x 71	0.109	12	0.105	12	17	44	12	87	222	1⅓
112 x 75	0.109	12	0.105	12	17	44	12	87	226	1¼

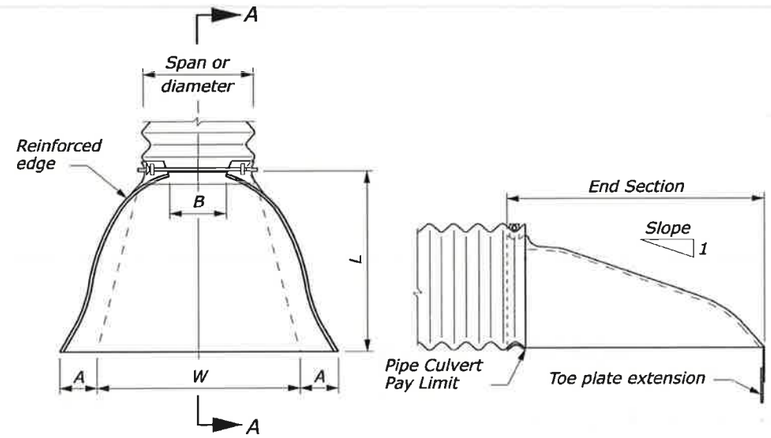

PLAN

SECTION A-A

ROUND OR PIPE ARCH CULVERT

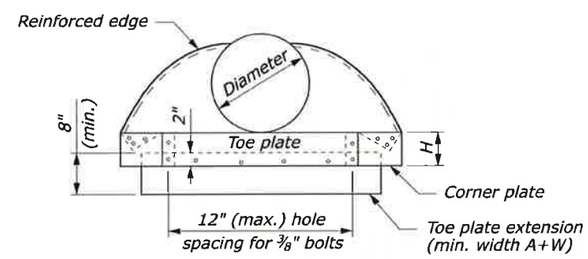

ELEVATION

ROUND PIPE CULVERT

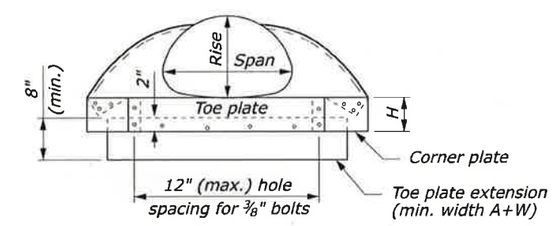

ELEVATION

PIPE ARCH CULVERT

NOTE:

1. Variations in design and dimensions are permitted to allow for manufacturer's standards.
2. Fabricate the diameter of the end section of Design B to match the inside diameter of the concrete pipe culvert.
3. Design C may be used in lieu of design A for all metal pipe culvert sizes. Coupling bands may be any acceptable type for the pipe culvert specified.
4. Fabricate multiple piece bodies with lap seams tightly joined by ⅜" rivets or bolts. Fabricate end section center panels for 60" and larger diameter pipe and equivalent pipe arch from 0.138 inch steel or 0.135 inch aluminum.
5. On end section center panels for 66" and larger equivalent pipe arch provide 2½" x 2½" x ¼" angle reinforcement bolted or riveted under the center panel seam.
6. Supplement the reinforced edges of end sections for 60" and larger diameter pipe and 66" and larger equivalent pipe arch with 2½" x 2½" x ¼" stiffener angles attached with bolts or rivets.
7. Fabricate connector section, corner plate and toe plate extensions from the same metal thickness as the panel body. Use toe plate extension where shown on the plans.
8. Warp embankment slopes to match the slope of the flared end sections.

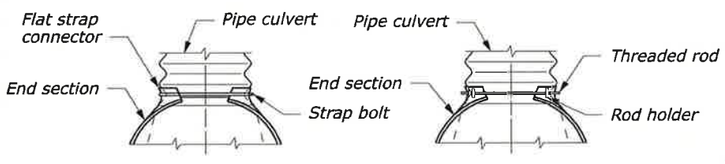

For 12" thru 24" round pipe and 17" x 13" thru 28" x 20" pipe arch

For 30" thru 60" round pipe and 35" x 24" thru 66" x 51" pipe arch

DESIGN A
CONNECTION TO ANNULAR CORRUGATED METAL PIPE

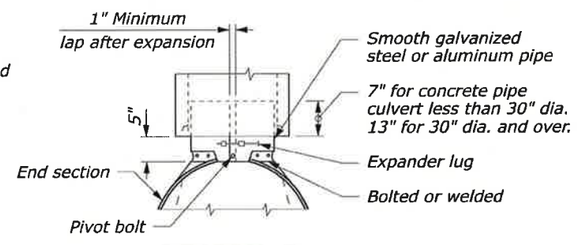

DESIGN B
CONNECTION TO CONCRETE PIPE INLET END

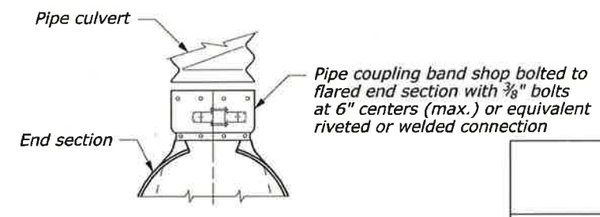

For all sizes of round pipe and pipe arch

DESIGN C
CONNECTION TO METAL PIPE OR OUTLET END OF CONCRETE PIPE

NO SCALE

NAVAJO DIVISION OF TRANSPORTATION

METAL END SECTIONS
USDOT 602-4

Designed by: MKC	Date: 7/19		
Drawn by: ELO	Date: 7/19		
Checked by: DDM	Date: 7/19		
File Name:			

NAVAJO D.O.T

REGION	STATE	RESERVATION	ROUTE	PROJECT NO.	SHEET	TOTAL SHEETS
NORTH	NEW MEXICO	NAVAJO	N5012	N5012(1)1,2&4	61A	75

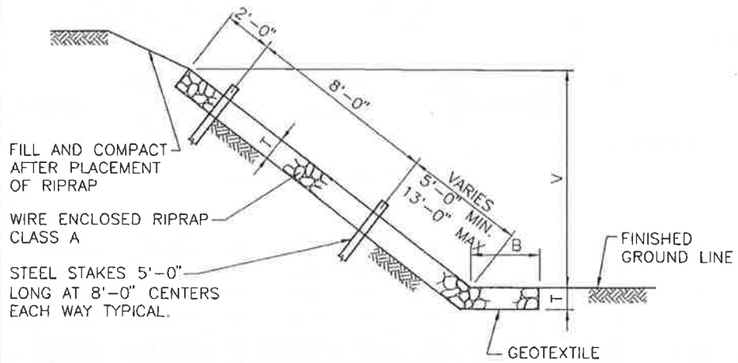

SECTION TYPE I

QUANTITIES PER LINEAR FOOT	
SLOPE	RIPRAP (CU. YDS.)
1.5 : 1	$\frac{T}{27}(B + 1.803\ V + 0.303\ T)$
1.75 : 1	$\frac{T}{27}(B + 2.016\ V + 0.266\ T)$
2 : 1	$\frac{T}{27}(B + 2.236\ V + 0.236\ T)$
3 : 1	$\frac{T}{27}(B + 3.162\ V + 0.162\ T)$
4 : 1	$\frac{T}{27}(B + 4.123\ V + 0.123\ T)$

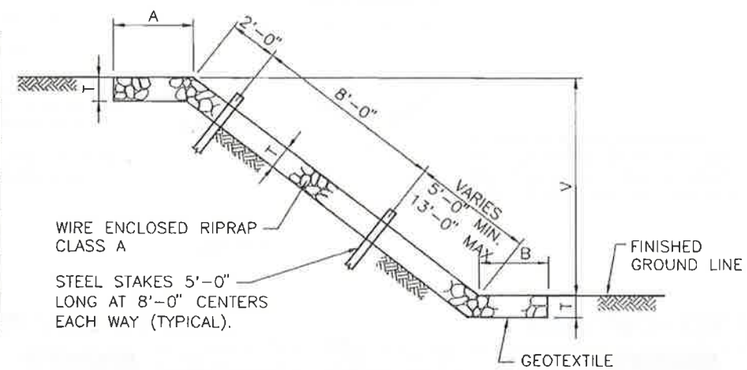

SECTION TYPE II

QUANTITIES PER LINEAR FOOT	
SLOPE	RIPRAP (CU. YDS.)
1 : 1	$\frac{T}{27}(A + B + 1.414V)$
1.5 : 1	$\frac{T}{27}(A + B + 1.803V)$
1.75 : 1	$\frac{T}{27}(A + B + 2.016V)$
2 : 1	$\frac{T}{27}(A + B + 2.236V)$
3 : 1	$\frac{T}{27}(A + B + 3.162V)$
4 : 1	$\frac{T}{27}(A + B + 4.123V)$

GENERAL NOTES

1. WIRE FABRIC FOR RIP RAP SHALL BE "W" OR HEXAGONAL MESH AND MEET THE REQUIREMENTS LISTED IN SECTION 602 OF THE NMDOT STANDARD SPECIFICATIONS FOR HIGHWAY AND BRIDGE CONSTRUCTON, CURRENT EDITION.
2. STEEL STAKES MAY BE RAILROAD RAILS WEIGHING NOT LESS THAN 30 LBS. PER YARD, 4" NOMINAL DIAMETER STANDARD STRENGTH GALVANIZED STEEL PIPE, OR L 4" x 4"x 3/8" STEEL ANGLES. STEEL STAKES SHALL PROJECT 6" ABOVE TOP OF RIPRAP. STEEL STAKES ARE CONSIDERED INCIDENTAL TO THE COMPLETION OF THE WORK AND NO DIRECT MEASUREMENT OR PAYMENT WILL BE MADE THEREFORE.
3. IF LENGTH OF SLOPE IS 15 FEET OR LESS, ONLY ONE ROW OF STEEL STAKES 2 FEET FROM THE TOP EDGE OF RIPRAP WILL BE REQUIRED UNLESS OTHERWISE NOTED ON PLANS.
4. FOR DIMENSIONS A, B, V, & T. SEE BRIDGE OR ROADWAY PLANS.
5. T=12" UNLESS OTHERWISE SHOWN ON PLANS; T=18" AT BRIDGES.
6. FASTENERS FOR SPLICES AND/OR SELVEDGE END CONNECTORS MAY BE WIRE TIES, INTERLOCKING WIRE CLIPS, HOG RINGS, OR LACING WIRE. ONLY FASTENERS WHICH APPEAR ON THE DEPARTMENT'S "APPROVED PRODUCTS LIST" MAY BE USED.
7. LACING SHALL BE CONTINUOUS AS FAR AS IS PRACTICAL AND SHALL PASS THROUGH EACH MESH OPENING.
8. WHERE SPLICING IS NECESSARY, AN OVERLAP OF LACING OF AT LEAST 1 FOOT SHALL BE PROVIDED.

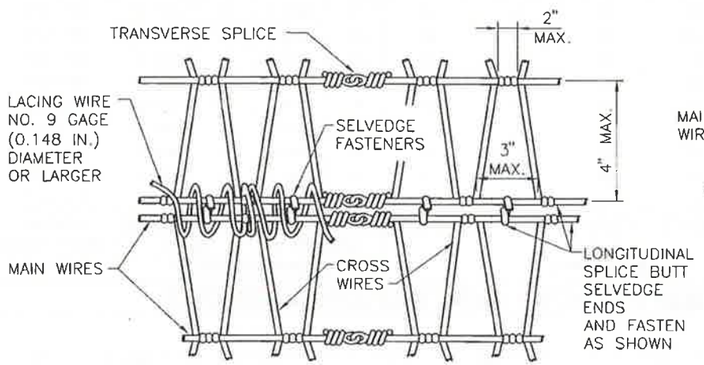

NORMAL INTERSECTION SPLICES

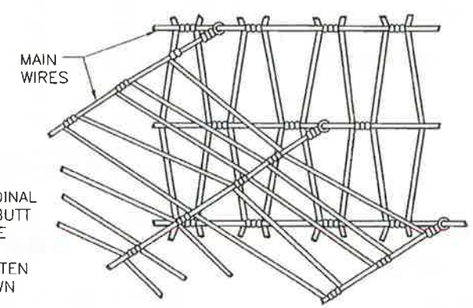

SKEWED INTERSECTION SPLICE

"W" MESH

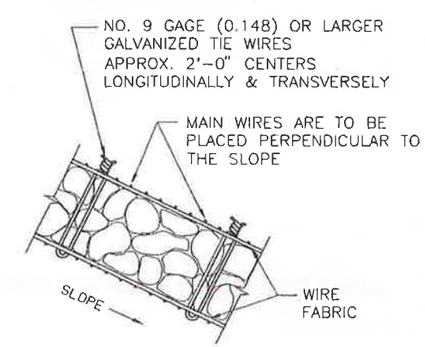

TYPICAL SECTION

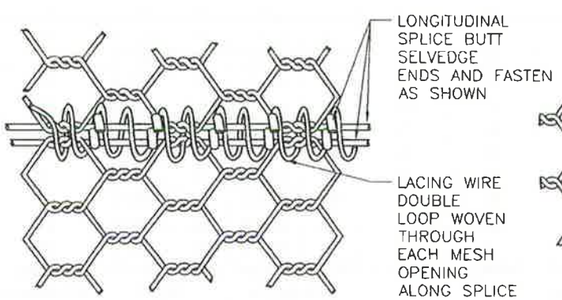

NORMAL INTERSECTION SPLICE

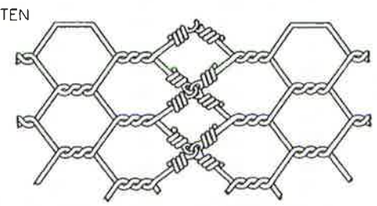

TRANSVERSE SPLICE

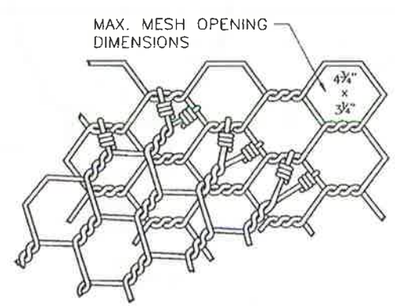

SKEWED INTERSECTION SPLICE

HEXAGONAL MESH

NOTE: REFERENCES WITHIN THIS DETAIL TO CLASS "A" RIPRAP IS EQUIVALENT TO BID ITEM 25112-2000 WIRE-ENCLOSED RIPRAP, CLASS 2

RAY M. TRUJILLO NEW MEXICO REGISTERED PROFESSIONAL ENGINEER 11/16/09

NAVAJO DIVISION OF TRANSPORTATION

WIRE ENCLOSE RIPRAP CLASS "A"
NMDOT 602-01 1/1

Designed by: MKC	Date: 7/19
Drawn by: ELD	Date: 4/19
Checked by: DBM	Date: 7/19
File Name:	

NAVAJO D.O.T

REGION	STATE	RESERVATION	ROUTE	PROJECT NO.	SHEET	TOTAL SHEETS
NORTH	NEW MEXICO	NAVAJO	N5012	N5012(1)1,2&4	61B	75

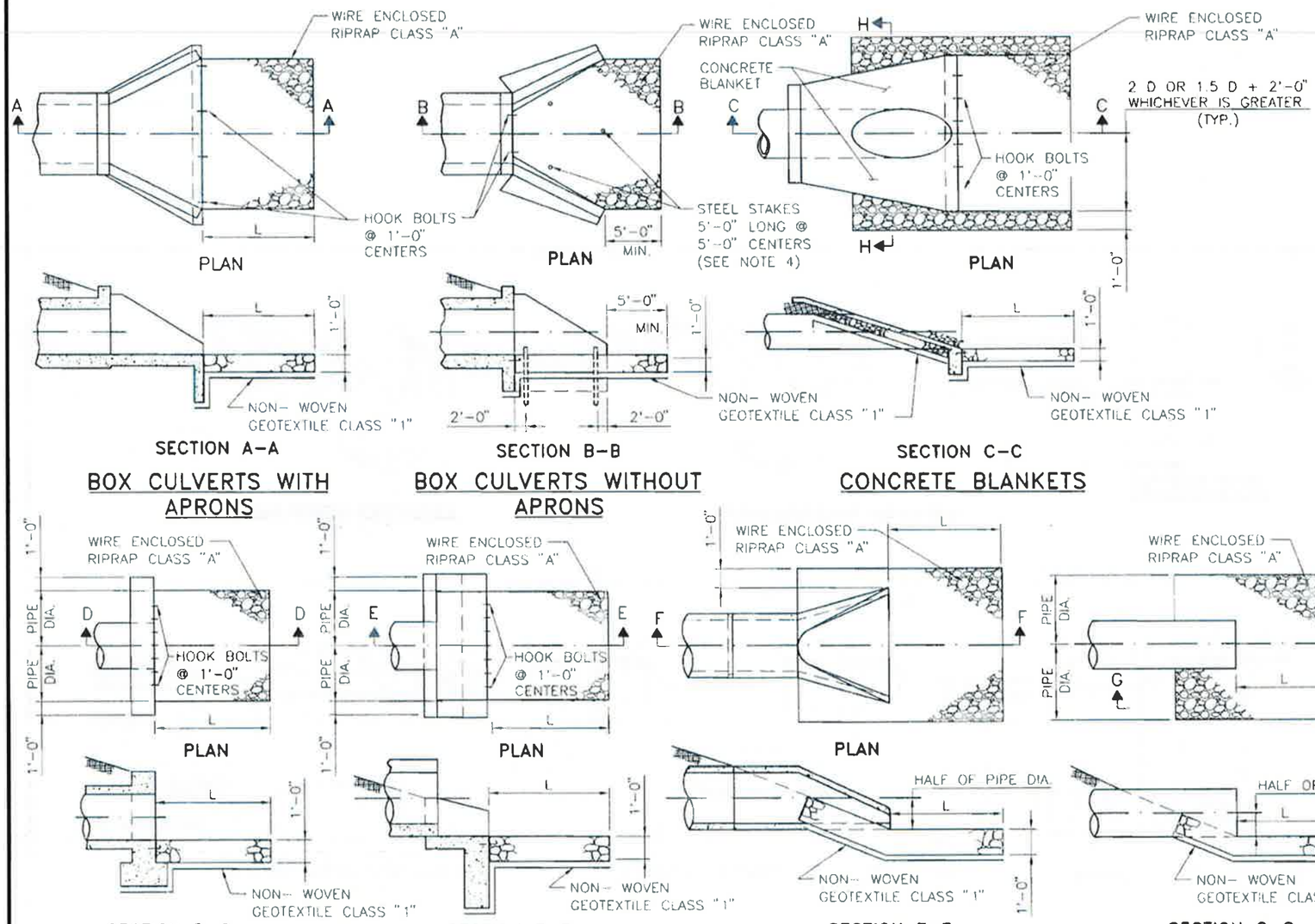

GENERAL NOTES

1. ALL RIPRAP SHALL BE CLASS "A" UNLESS SPECIFIED OTHERWISE IN THE PLANS. DIMENSIONS OF RIPRAP CLASS "A" SHALL BE VERIFIED IN FIELD.
2. RIPRAP ON THIS STANDARD IS SHOWN FOR SINGLE PIPES AND CULVERTS ONLY. FOR MULTIPLE PIPE AND CULVERT INSTALLATIONS, EXTEND RIPRAP BEYOND OUTLET OPENING AS SHOWN IN PLAN DETAILS AND PLACE RIPRAP BETWEEN OUTLET OPENINGS AS SHOWN IN ELEVATION DETAILS.
3. SERIAL 602-02-1/1 MAY BE REFERENCED FOR DESCRIPTIONS OF WIRE MESH AND ALTERNATE PATTERNS.
4. STEEL STAKES MAY BE RAILROAD RAILS WEIGHING NOT LESS THAN 30 LBS. PER YARD, 4" NOMINAL DIAMETER STANDARD STRENGTH GALVANIZED STEEL PIPE, OR L 4" X 4"X 3/8" STEEL ANGLES. STEEL STAKES SHALL PROJECT 6" ABOVE TOP OF RIPRAP. STEEL STAKES ARE CONSIDERED INCIDENTAL TO THE COMPLETION OF THE WORK AND NO DIRECT MEASUREMENT OR PAYMENT WILL BE MADE THEREFORE.
5. CONTRACTOR MAY SUBSTITUTE CONCRETE CHEMICAL ANCHORS WITH HOOK GEOMETRY SHOWN, WHICH MEET REQUIREMENTS OF SECTION 522.
6. TOE-IN OR PLACE EROSION CONTROL GEOTEXTILE UNDER FOOTINGS OR CUT-OFF WALL.
7. L (MIN.) = 10'-0" OR 1.5 x DIAMETER OR RISE, WHICHEVER IS GREATER.

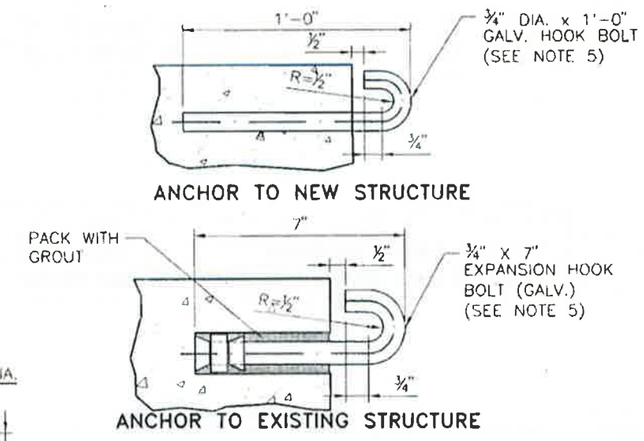

HOOK BOLT DETAILS

COST OF HOOK BOLT IN PLACE TO BE INCLUDED IN UNIT BID PRICE FOR RIPRAP.

NOTE: REFERENCES WITHIN THIS DETAIL TO CLASS "A" RIPRAP IS EQUIVALENT TO BID ITEM 25112-2000 WIRE-ENCLOSED RIPRAP, CLASS 2

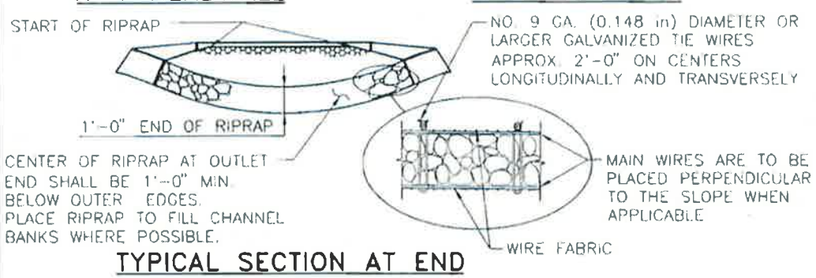

TYPICAL SECTION AT END OF RIPRAP

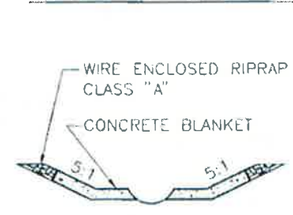

SECTION H-H

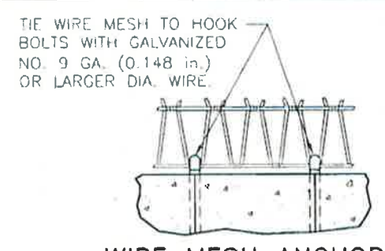

WIRE MESH ANCHOR

NOTE: SEE SHEET 602-01-1/1 FOR WIRE MESH SPLICE DETAILS.

RAY M. TRUJILLO NEW MEXICO 10313 REGISTERED PROFESSIONAL ENGINEER 11/16/09

NAVAJO DIVISION OF TRANSPORTATION

EROSION CONTROL AT CULVERT OUTLETS NMDOT 602-02 1/1

Designed by: MKC	Date: 7/19
Drawn by: LLG	Date: 7/19
Checked by: DBM	Date: 7/19
File Name:	

NAVAJO D.O.T

REGION	STATE	RESERVATION	ROUTE	PROJECT NO.	SHEET	TOTAL SHEETS
NORTH	NEW MEXICO	NAVAJO	N5012	N5012(1)1,2&4	62	75

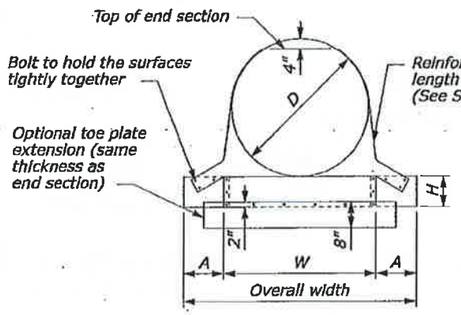

FRONT VIEW
ROUND PIPE CULVERT

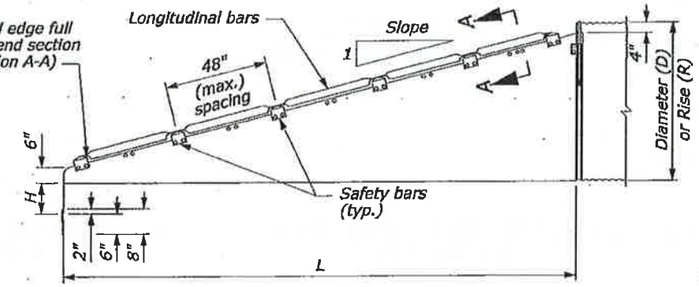

ELEVATION
CROSS DRAINAGE END SECTION

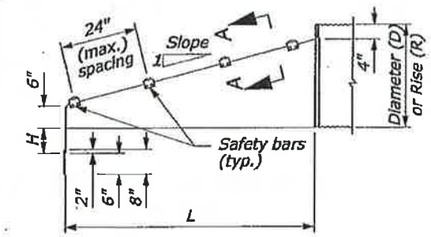

ELEVATION
PARALLEL DRAINAGE END SECTION

NOTE:

1. Use end sections on 1V:4H to 1V:6H slopes only. Use toe plate extension where shown on the plans.
2. Fabricate safety and longitudinal bars from steel pipe conforming to ASTM A53 schedule 40 specifications. Galvanize bars hot dipped after fabrication.
3. A longitudinal bar is required for cross drainage end sections when the span is greater than 30". Use additional longitudinal bars if spacing exceeds 30" on larger end sections.
4. Safety and longitudinal bars are not required on 30" and smaller cross drainage end sections.
5. Safety bars are not required on 18" and smaller parallel drainage end sections.
6. 18" diameter sleeves have a thickness of 0.079", all others are 0.109".

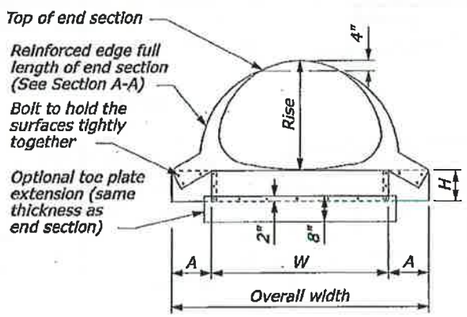

FRONT VIEW
PIPE ARCH CULVERT

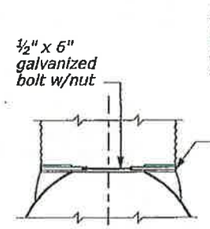

FOR METAL ROUND PIPES 15" THRU 24"
TYPE #1

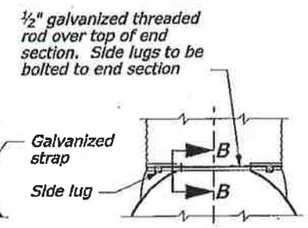

FOR METAL ROUND PIPES 30" AND LARGER. FOR PIPE ARCHES 21" X 15" AND LARGER
TYPE #2

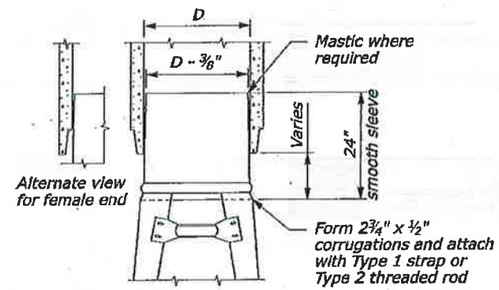

FOR ALL SIZES OF CONCRETE ROUND OR PIPE ARCHES
TYPE #3

CONNECTOR DETAILS

METAL END SECTIONS FOR ROUND PIPE CULVERT							
PIPE SIZE Ø INCHES	METAL THICK (MIN.) INCH/GAGE	DIMENSIONS IN INCHES					
		A	H	W	OVERALL WIDTH	L Slope=4	L Slope=6
18	0.064/16	8	6	24	40	32	47
24	0.064/16	8	6	30	46	55	83
30	0.109/12	12	9	36	60	79	118
36	0.109/12	12	9	42	66	102	154
42	0.109/12	16	12	48	80	126	189
48	0.109/12	16	12	54	86	150	224
54	0.109/12	16	12	60	92	173	260
60	0.109/12	16	12	66	98	197	295

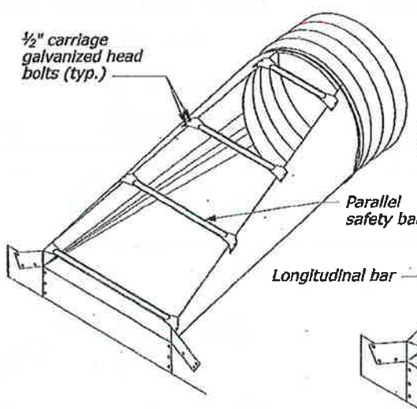

PARALLEL DRAINAGE END SECTION

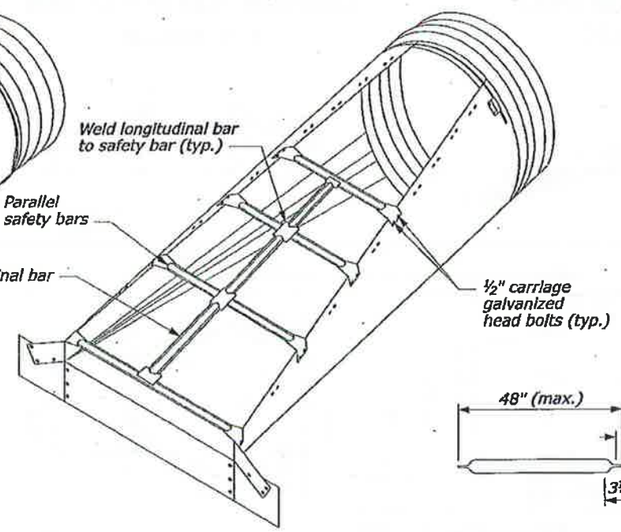

CROSS DRAINAGE END SECTION

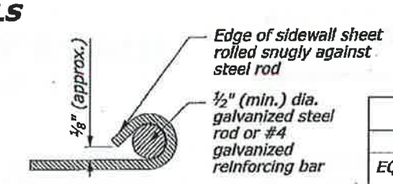

SECTION A-A

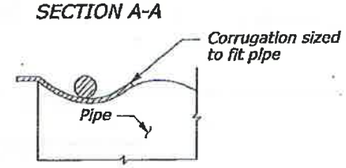

SECTION B-B

METAL END SECTIONS FOR PIPE ARCH CULVERT									
PIPE SIZE (INCHES)			METAL THICK (MIN.) INCH/GAGE	DIMENSIONS (INCHES)					
EQUIV. Ø	SPAN	RISE		A	H	W	OVERALL WIDTH	L Slope=4	L Slope=6
18	21	15	0.064/16	8	6	27	43	20	30
24	28	20	0.064/16	8	6	33	49	40	60
30	35	24	0.109/12	12	9	40	64	55	83
36	41	29	0.109/12	12	9	47	71	75	112
42	48	32	0.109/12	16	12	54	86	90	136
48	56	37	0.109/12	16	12	62	94	110	165
54	63	42	0.109/12	16	12	69	101	130	195
60	70	46	0.109/12	16	12	76	107	146	218
72	82	56	0.109/12	16	12	88	120	185	278

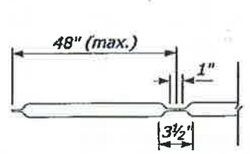

LONGITUDINAL DRAINAGE BAR

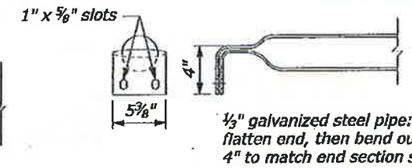

PARALLEL BARS

SAFETY BAR DETAILS

NO SCALE

NAVAJO DIVISION OF TRANSPORTATION

METAL END SECTIONS WITH SAFETY BARS USDOT 602-9

Designed By: NKC	Date: 7/09
Drawn By: LLG	Date: 7/19
Checked By: DAM	Date: 7/19
File Name:	

NAVAJO D.O.T

M:\TRN\17-100-090-10\2_DISCIPLINES_SHEETS\STANDARD DWGS\C-NMDOT-STD N5012.DWG 1/30/2020 5:03 PM

REGION	STATE	RESERVATION	ROUTE	PROJECT NO.	SHEET	TOTAL SHEETS
NORTH	NEW MEXICO	NAVAJO	N5012	N5012(1)1,2&4	63	75

CONSTRUCTION PLANS APPROVED
DATE: 09/03/2008

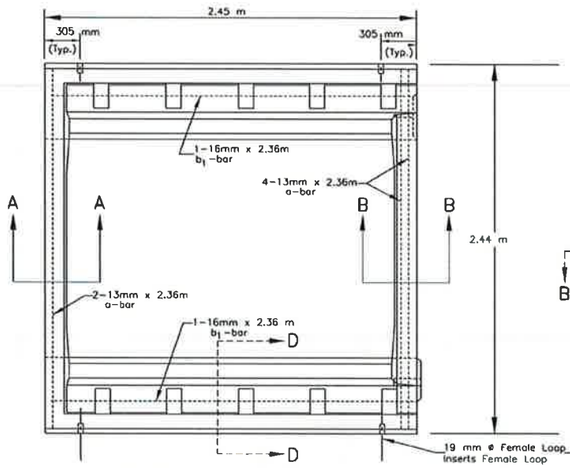

PLAN – END UNIT

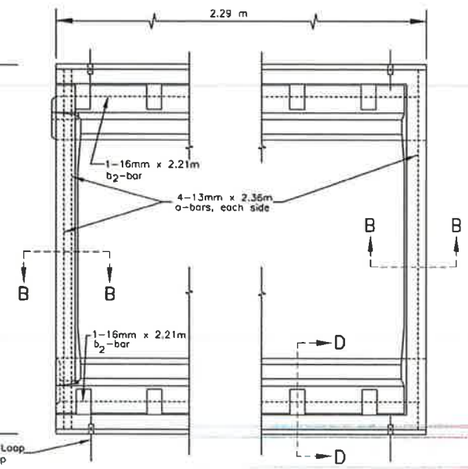

PLAN – INTERMEDIATE UNIT

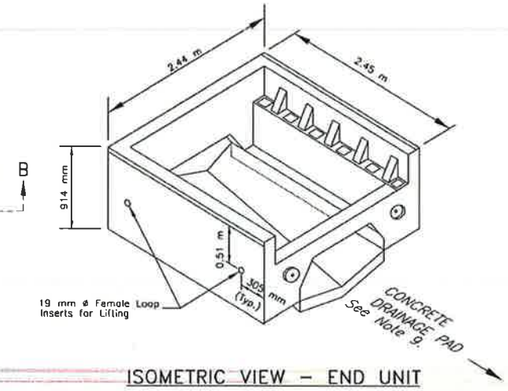

ISOMETRIC VIEW – END UNIT

REINFORCING STEEL SCHEDULE

STRAIGHT BARS				BENT BARS			
MARK	NO.	SIZE	LENGTH	MARK	NO.	SIZE	LENGTH
END UNIT							
a	6	13	2.36 m				
b_1	2	16	2.36 m				
				c	3	10	0.61 m
D_1	20	13	0.46 m				
INTERMEDIATE UNIT							
a	8	13	2.36 m				
b_2	2	16	2.21 m				
				c	6	10	0.61 m
D_1	18	13	0.46 m				

BENDING DIAGRAMS

ALL DIMENSIONS ARE OUT TO OUT

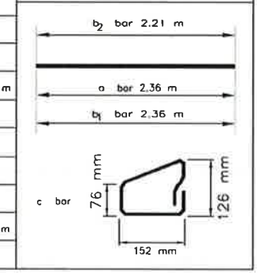

GENERAL NOTES

1. PRECAST CONCRETE SHALL ATTAIN A MINIMUM 28-DAY COMPRESSIVE STRENGTH OF 27.6 MPa, IN ACCORDANCE WITH AASHTO T22 (ASTM C-39). THE CONCRETE SHALL BE CLASS A(AE) CONFORMING TO SECTION 552 OF THE FP-14.
2. REINFORCING STEEL SHALL CONFORM TO ASTM SPECIFICATION A615, GRADE 300. ALL STRUCTURAL STEEL SHALL CONFORM TO AASHTO M270M, GRADE 250.
3. EACH UNIT SHALL CONFORM TO THE AASHTO MS-18 HIGHWAY LOADING REQUIREMENTS.
4. EACH UNIT SHALL BE FABRICATED TO CONFORM TO THE ROADWAY CROWN AS SHOWN ON THE PLANS, OR AS DESIGNATED BY THE CM.
5. BOLTS, WASHER, AND NUTS, SHALL BE GALVANIZED IN ACCORDANCE WITH AASHTO M-111.
6. ALL TRAFFIC GRILL UNIT, INCLUDING STEEL ANGLES SHALL BE SHOP PAINTED WITH ONE (1) PRIMER COAT, ONE (1) INTERMEDIATE COAT, AND ONE (1) FINISH COAT IN ACCORDANCE WITH SECTION 563, PAINT SYSTEM 2 OF FP-14.
7. WING BRACES SHALL BE CONSIDERED SUBSIDIARY ITEMS TO THE CATTLEGUARD UNIT.
8. NO STEEL CATTLEGUARDS TO BE USED AT PCC DRAINAGE PAD CATTLEGUARD LOCATIONS.
9. SEE SHEET 72 FOR CONCRETE DRAINAGE PAD LOCATIONS AND NOTES.
10. ALL STEEL CATTLEGUARDS MAYBE SUBSTITUTED PROVIDED THE CONTRACTOR CAN SHOW THEY ARE MORE COST EFFECTIVE WITH SUPPORTING DATA. THE CONTRACTOR IS RESPONSIBLE FOR PATENT PROTECTION RIGHTS AND ALL SHOP DRAWINGS AND MATERIAL CERTIFICATIONS.

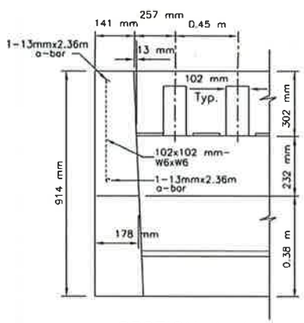

SECTION A–A

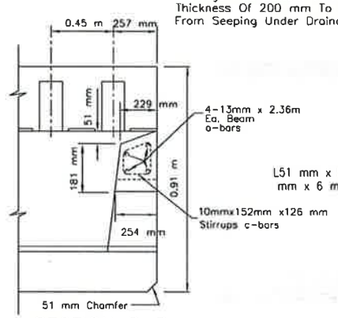

SECTION B–B

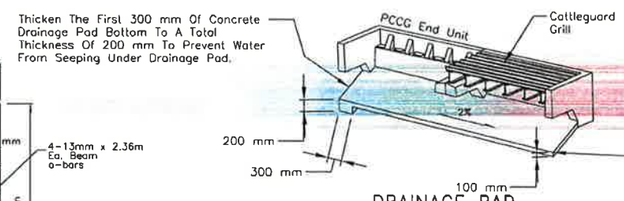

DRAINAGE PAD

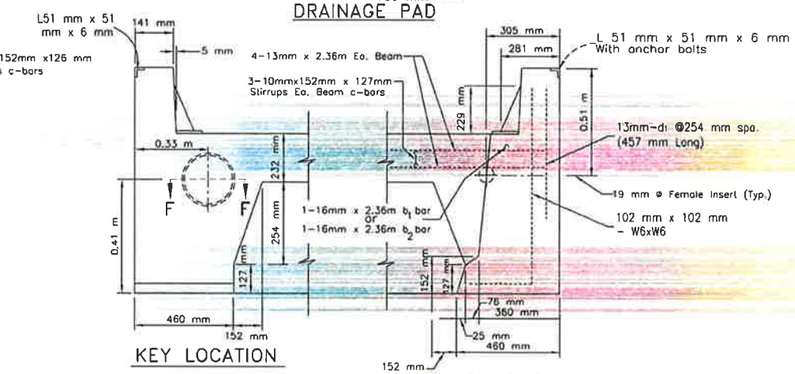

KEY LOCATION

SECTION D–D

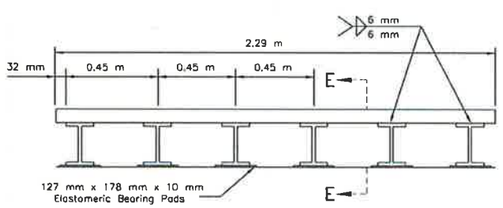

TRAFFIC GRILLE UNIT

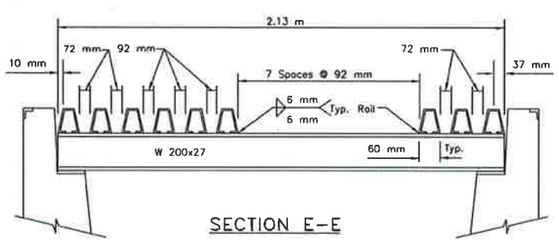

SECTION E–E

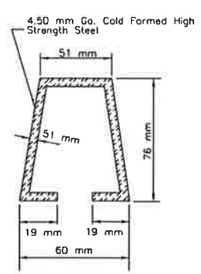

STEEL CROSSBAR SECTION

15 Req'd for 1 Grid

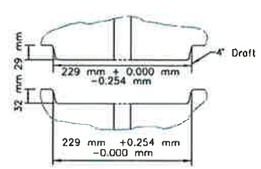

SECTION F–F

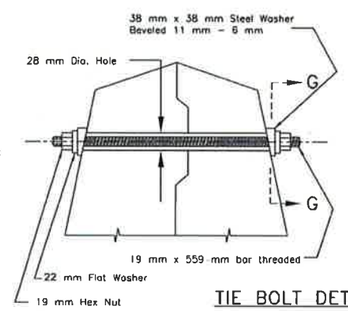

TIE BOLT DETAIL

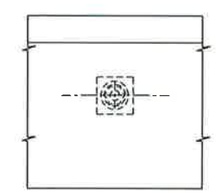

SECTION G–G

NOTE: THIS DETAIL IS METRIC

NAVAJO DIVISION OF TRANSPORTATION

PRECAST CONCRETE CATTLEGUARD DETAILS

Designed by: MHC		Date: 7/19	
Drawn by: LLO		Date: 7/19	
Checked by: ZLM		Date: 7/19	
File Name:			

NAVAJO D.O.T

W:\TRN\17-100-090-10\2_DISCIPLINES_SHEETS\STANDARD DWGS\C-NMDOT-STD N5012.DWG 1/30/2020 5:03 PM

REGION	STATE	RESERVATION	ROUTE	PROJECT NO.	SHEET	TOTAL SHEETS
NORTH	NEW MEXICO	NAVAJO	N5012	N5012(1)1,2&4	64	75

ESTIMATED MATERIAL LIST

PART NO.	MATERIAL	SIZE AND THICKNESS	LENGTH	QUANTITY
1	Structural Steel Pipe	64 mm ø Nominal	4.23 m	2
2	Structural Steel Pipe	32 mm ø Nominal	4.19 m	2
3	Steel Angle (See Note 6 & 7)	L 64 x 64 x 9.5 mm	2.29 m	2
4	Steel Plate	89 mm x 10 mm	178 mm	2
5	Steel Angle	L 152 x 89 x 9.5 mm	89 mm	4
6	Bar	25 mm x 6 mm	1.68 m	2
	Bolts, Nuts and Washers	As Shown		

GENERAL NOTES

1. Structural pipe shall conform to ASTM A53-93a, Grade B. All other structural steel shall conform to ASTM-A36.

2. Bolts, nuts, and washers shall be galvanized in accordance with AASHTO M111 (ASTM A123).

3. All wing brace structural steel and pipe shall receive one (1) primer coat, one (1) intermediate coat, and one (1) finish coat in accordance with Section 563, Paint System 2 of FP-14.

4. All structural pipe joints shall be fabricated in accordance with AISC Manual of Steel Construction, Latest Edition.

5. Welding design details shall conform to the AASHTO Standard Specifications for welding at Structural Steel Highway Bridges, Latest Edition.

6. The supporting wing brace posts length (part 3) shall be 2.3 meter (minimum). Under certain conditions (such as drain through cattleguard, high embankment, etc) the length of the post may vary to fully support the wing braces. This work shall be incidental to item 61903-1000.

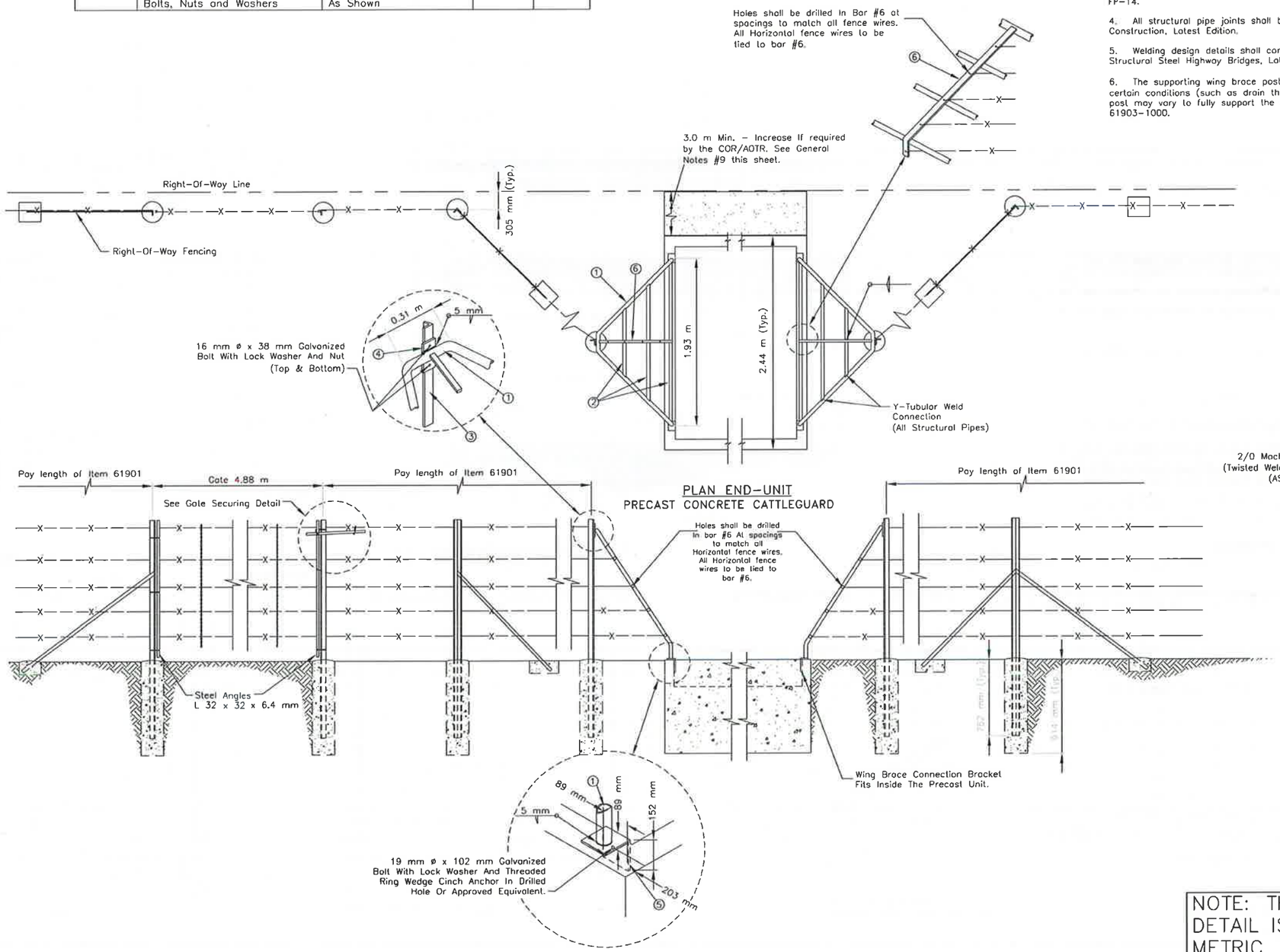

PLAN END-UNIT
PRECAST CONCRETE CATTLEGUARD

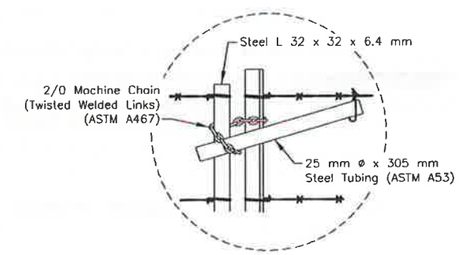

GATE SECURING DETAIL

NOTE: THIS DETAIL IS METRIC

NAVAJO DIVISION OF TRANSPORTATION

CATTLEGUARD WING BRACE DETAILS
BIA STANDARD DETAILS

Designed by: MKS	Date: 7/19
Drawn by: ELG	Date: 7/19
Checked by: DDM	Date: 7/19
File Name: n5012 sht 64.dgn	

NAVAJO D.O.T

M:\TRN\17-100-090-10\2_DISCIPLINES_SHEETS\STANDARD DWGS\C-NMDOT-STD N5012.DWG 1/30/2020 5:03 PM

REGION	STATE	RESERVATION	ROUTE	PROJECT NO.	SHEET	TOTAL SHEETS
NORTH	NEW MEXICO	NAVAJO	N5012	N5012(1)1,2&4	65	75

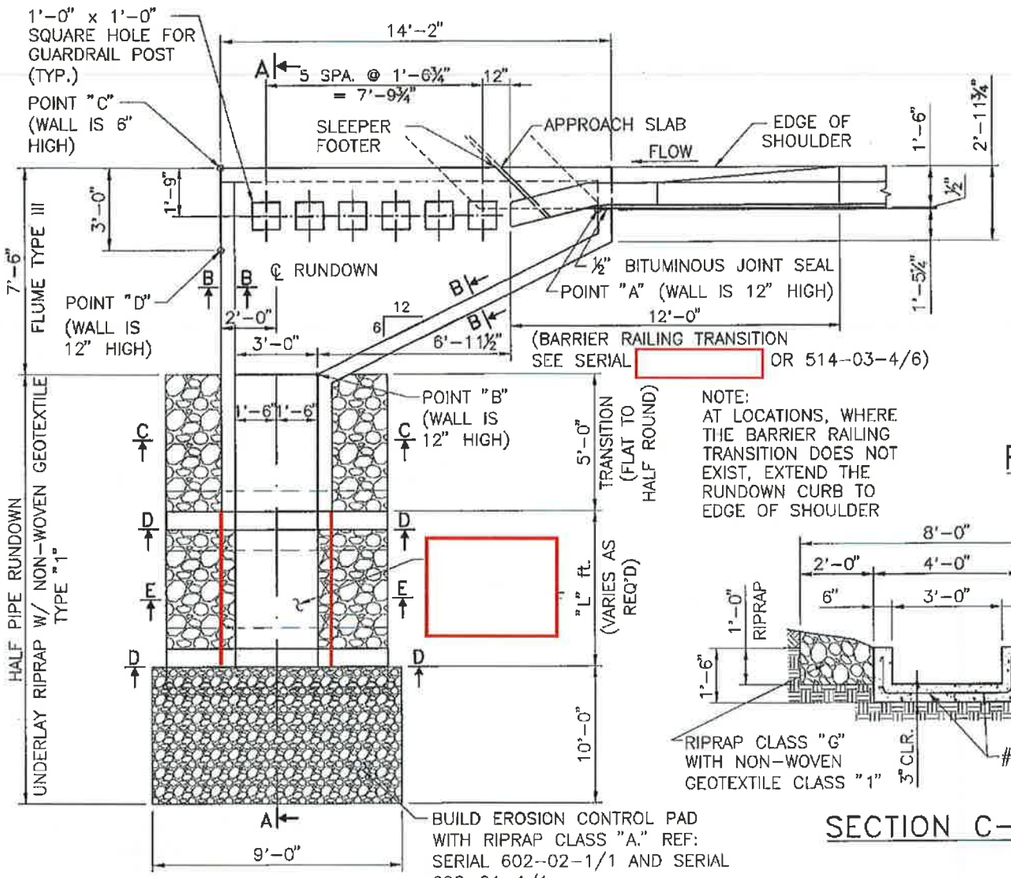

PLAN

NOTE:
AT LOCATIONS, WHERE THE BARRIER RAILING TRANSITION DOES NOT EXIST, EXTEND THE RUNDOWN CURB TO EDGE OF SHOULDER

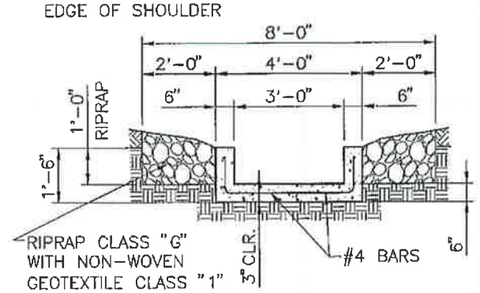

SECTION C-C

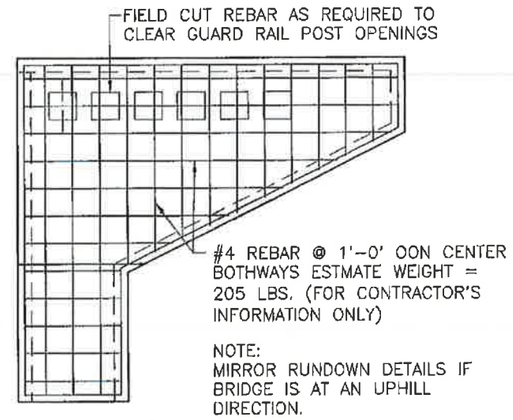

NOTE:
MIRROR RUNDOWN DETAILS IF BRIDGE IS AT AN UPHILL DIRECTION.

REBAR PLACING PLAN

GENERAL NOTES

1. STRUCTURAL CAST-IN-PLACE CONCRETE SHALL BE CLASS "A." CHAMFER ALL EXPOSED EDGES OF CONCRETE 3/4".
2. ALL REINFORCING BARS SHALL CONFORM TO AASHTO SPECIFICATION M 31, GRADE 60.
3. FIELD CUT AND BEND REINFORCING BARS AS REQUIRED FOR THE STRUCTURE.
4. INSTALLATION AS SHOWN IS TYPICAL AND DETAILS MAY BE VARIED TO FIT LOCATION. QUANTITIES WILL BE ADJUSTED IN THE FIELD.
5. RUNDOWN FLUMES WILL BE PAID FOR UNDER THE PAY ITEMS LISTED ON SHEET 17 OF THIS PLAN SET
6. CONCRETE PORTION OF FLUMES OR RUNDOWNS SHALL BE CONSTRUCTED IN ACCORDANCE WITH THE REQUIREMENTS FOR "MINOR CONCRETE STRUCTURES" - SECTION 601 OF THE FP-14 SPECIFICATIONS
7. STEEL STAKES FOR ANCHORING RIPRAP ARE ONLY REQUIRED FOR THE RIPRAP RUNDOWN WITH CLASS "A" RIPRAP.
8. NOTE DELETED FROM PLANS
9. THE BRIDGE JOINT STRIP SEAL SHALL DRAIN WATER INTO THE RUNDOWN AS SHOWN ON THE BRIDGE PLAN DETAILS. THE ½" BITUMINOUS JOINT FILLER SHALL BE LOCATED BETWEEN THE RUNDOWN, APPROACH SLAB, AND ASPHALT PAVING WHERE APPLICABLE. THE ½" BITUMINOUS JOINT FILLER SHALL BE CONSIDERED INCIDENTAL TO THE RUNDOWN FLUME.
10. EXCAVATION, ANCHOR BOLTS, AND HOOK BOLTS FOR RUNDOWN SHALL BE CONSIDERED INCIDENTAL AND NO DIRECT PAYMENT WILL BE MADE THEREFORE. NON-WOVEN GEOTEXTILE CLASS "1" SHALL BE INCLUDED IN THE UNIT BID PRICE FOR RIPRAP CLASS "A" AND RIPRAP CLASS "G."

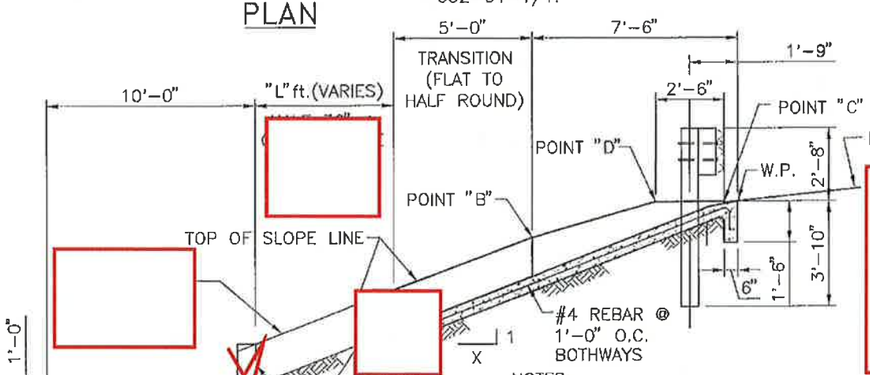

SECTION A-A

NOTES:
1. FOR DETAILS OF METAL BARRIER AND POST, SEE SHEETS 49 TO 51 THIS PLAN SET
2. FOR "X" VALUE SEE ROADWAY PLANS.
3. NOTE DELETED FROM PLANS

SECTION D-D

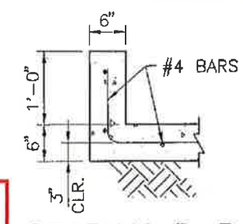

SECTION B-B

NOTE:
1. QUANTITIES FOR RIPRAP CLASS "A" OR "G" VARY DEPENDING UPON WHETHER THE RUNDOWN IS LOCATED AT PROTECTED OR UNPROTECTED SLOPES. SEE ROADWAY PLANS FOR QUANTITIES AND LOCATIONS.
2. NOTE DELETED FROM PLANS

RAY M. TRUJILLO
NEW MEXICO
13514
4/3/12
REGISTERED PROFESSIONAL ENGINEER

	DATE	BY	DESCRIPTION
2	2/02/12	TM	GENERAL NOTES
1	4/24/07	TM	GENERAL REVISIONS

REVISIONS (OR CHANGE NOTICES)

NEW MEXICO
DEPARTMENT OF TRANSPORTATION
STANDARD DRAWING

RUNDOWN FLUMES
TYPE III
FOR BRIDGES

DESIGNED BY: DRAWN BY: SKL CHECKED BY: YML/TM

515-04-1/2

REGION	STATE	RESERVATION	ROUTE	PROJECT NO.	SHEET	TOTAL SHEETS
NORTH	NEW MEXICO	NAVAJO	N5012	N5012(1)1,2&4	66	75

TABLE A (FOR CONTRACTOR'S INFORMATION ONLY)

ESTIMATED QUANTITIES OF FLUME STRUCTURES

PAY ITEM	PAY UNIT	STRUCTURE TYPES OF FLUME	
			FLUME TYPE III FOR BRIDGES ⓒ
REINFORCED CONCRETE FOR MINOR STRUCTURES	CU. YD.		$0.38 + 1.73\left(\frac{\sqrt{X^2+1}}{X}\right)$

(FOR THE DETAILS OF FLUME STRUCTURES, SEE SERIAL 515-04-1/2)

TABLE B (FOR CONTRACTOR'S INFORMATION ONLY)

ESTIMATED QUANTITIES OF RUNDOWN STRUCTURES

PAY ITEM	PAY UNIT	STRUCTURE TYPES OF RUNDOWN		
			CONCRETE RUNDOWN ③	
REINFORCED CONCRETE FOR MINOR STRUCTURES	CU. YD.		$0.56 + 0.11(L)\left(\frac{\sqrt{X^2+1}}{X}\right)$	
36" ø CULVERT PIPE	FT.			
24" ø CULVERT PIPE	FT.			
RIPRAP "A"	CU. YD.		3.33	
RIPRAP "G"	SD. YD.		$(2.22 + 0.44L)\left(\frac{\sqrt{X^2+1}}{X}\right)$	

TABLE C (FOR CONTRACTOR'S INFORMATION ONLY)

ESTIMATED QUANTITIES OF VARIOUS STRUCTURAL COMBINATIONS

RUNDOWN FLUME TYPE III (SERIAL 515-04-1/2)			
CONBINATION WITH RUNDOWN OPTIONS		CONC. RUNDOWN	
EST. QUANITITIES FROM TABLE A & B		COLUMN ⓒ + COLUMN ③	

NOTES

1. QUANTITIES FOR RIPRAP CLASS "A" OR "G" VARY DEPENDING UPON WHETHER THE RUNDOWN IS LOCATED AT PROTECTED OR UNPROTECTED SLOPES. SEE ROADWAY PLANS FOR QUANTITIES AND LOCATIONS.
2. QUANTITIES FOR "REINFORCED CONCRETE FOR MINOR STRUCTURES" INCLUDE THE FLUME AND TWO HALF HEADWALLS OR TWO HEADWALLS WITH FOOTINGS.
3. REFER TO SERIAL 515-04-1/2 FOR RUNDOWN DETAILS
4. THE ESTIMATED QUANTITY CALCULATIONS OF TABLE A AND TABLE B ARE BASED ON X:1 EMBANKMENT SLOPE SHOWN ON ROADWAY PLANS. ALSO, THE "L" VALUE IS TO BE FIGURED BY "X" VALUE OF EMBANKMENT SLOPE.
5. NOTE DELETED FROM PLANS

RAY M. TRUJILLO
NEW MEXICO
13514
4/3/12
REGISTERED PROFESSIONAL ENGINEER

	DATE	BY	DESCRIPTION
1	2/02/12	TM	GENERAL REVISIONS

REVISIONS (OR CHANGE NOTICES)

NEW MEXICO
DEPARTMENT OF TRANSPORTATION
STANDARD DRAWING

ESTIMATED QUANTITES
FOR
RUNDOWN FLUMES

DESIGNED BY: ____ DRAWN BY: SKL CHECKED BY: YML/TM

515-04-2/2

REGION	STATE	RESERVATION	ROUTE	PROJECT NO.	SHEET	TOTAL SHEETS
NORTH	NEW MEXICO	NAVAJO	N5012	N5012(1)1,2&4	67	75

GENERAL NOTES

1. WORKMANSHIP AND MATERIALS SHALL CONFORM TO THE FP-14 SPECIFICATIONS (CURRENT EDITION), APPLICABLE SUPPLEMENTAL SPECIFICATIONS AND SPECIAL PROVISIONS.

SECTION 556 - "BRIDGE RAILING" AND SECTION 552 - "STRUCTURAL CONCRETE" OF THE FP-14 SPECIFICATIONS

2. BRIDGE BARRIER RAILING SHALL CONFORM TO THE REQUIREMENTS CONTAINED IN ~~SECTION 511 OF THE STANDARD SPECIFICATIONS. CONCRETE FOR BRIDGE BARRIER RAILING SHALL BE SUPERSTRUCTURE CONCRETE CLASS "HPB."~~ BARRIER RAILING SHALL BE PAID FOR AT THE UNIT PRICE PER LINEAR FOOT, INCLUDING COMPLETELY EMBEDDED REINFORCING STEEL, ANCHOR BOLTS AND ANY OTHER COMPLETELY EMBEDDED OR APPURTENANT STEEL ITEMS.
3. REINFORCING BARS SHALL CONFORM TO THE REQUIREMENTS CONTAINED IN SECTION 554 OF THE STANDARD SPECIFICATIONS. REINFORCING BARS SHALL BE GRADE 60 UNLESS A DIFFERENT GRADE IS SPECIFIED ELSEWHERE IN THE PLANS. DIMENSIONS SHOWN REFER TO THE CENTERLINES OF BARS UNLESS NOTED OTHERWISE. USE THE SAME TYPE OF REINFORCEMENT FOR BRIDGE BARRIER RAILING AS USED IN DECK.
4. BARRIER RAILING INSTALLATION ON DECK SLABS MAY BE TYPE 42A AND 42B AT THE OPTION OF THE CONTRACTOR. DECK THICKNESS (NEW OR EXISTING) MUST BE APPROPRIATE FOR THE TYPE OF INSTALLATION SELECTED.
5. FOR DETAILS OF BRIDGE BARRIER RAILING CONNECTION TO THE APPROACH METAL BARRIER – SEE SHEET 4 OF 6.
6. COVER TO REINFORCING BARS SHALL BE 2 INCHES CLEAR UNLESS NOTED OTHERWISE.
7. REFLECTIVE BARRIER DELINEATORS SHALL BE MOUNTED ON TOP OF THE BARRIER RAILING IN CONFORMANCE WITH THE TRAFFIC PLANS.
8. APPLY PENETRATING WATER REPELLENT TREATMENT TO ALL EXPOSED SURFACES OF THE BRIDGE BARRIER RAILING.
9. DISCONTINUE HORIZONTAL REINFORCEMENT AT ALL EXPANSION AND CONSTRACTION JOINTS.
10. STRUCTURAL STEEL SHALL CONFORM TO THE REQUIREMENTS OF ASTM A 36. REMOVABLE COVER PLATES SHALL BE POWDER COATED IN ACCORDANCE WITH SECTION 555 OF THE STANDARD SPECIFICATION IN A COLOR TO MATCH THE COLOR OF THE BRIDGE BARRIER RAILING. ALL OTHER STEEL COMPONENTS SHALL BE GALVANIZED IN ACCORDANCE WITH 555 OF THE STANDARD SPECIFICATIONS.
11. COST OF EXPANSION PLATE ASSEMBLY, IN PLACE, SHALL BE INCLUDED IN THE UNIT BID PRICE FOR BRIDGE BARRIER RAILING.
12. CONSTRUCTION JOINTS BETWEEN BARRIER RAILING AND BRIDGE DECK CONCRETE SHALL BE CLEANED AND ROUGHENED PRIOR TO PLACEMENT OF BARRIER RAILING CONCRETE AS REQUIRED BY THE SPECIFICATIONS.
13. FOR DOWEL AND SLEEVE ASSEMBLY SEE SERIAL NO. 514-03-6/6 TITLED "DOWEL ASSEMBLY FOR EXPANSION JOINTS IN 42 INCH CONCRETE WALL BARRIER AND CONCRETE BRIDGE BARRIER RAILING."
14. CHAMFER EXPOSED EDGES OF STRUCTURES 3/4 INCH UNLESS NOTED OTHERWISE.

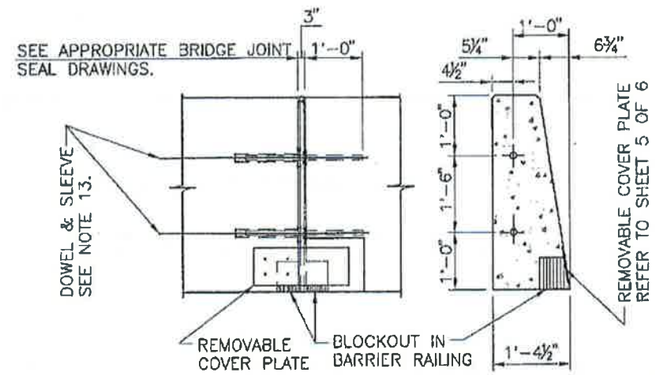

ELEVATION SECTION

EXPANSION JOINT DETAIL

PROVIDE EXPANSION JOINT IN BARRIER RAILING AT EACH BRIDGE EXPANSION JOINT. REFER TO SERIAL NO. 514-03-6/6, DOWEL ASSEMBLY FOR EXPANSION JOINTS IN 42 INCH CONCRETE WALL BARRIER AND CONCRETE BRIDGE BARRIER RAILING, FOR DETAILS OF THE JOINT, FORMING MATERIALS AND DOWELS.

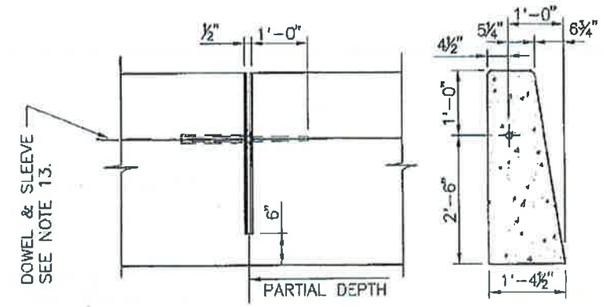

ELEVATION SECTION

CONTRACTION JOINT DETAIL

PROVIDE CONTRACTION JOINTS AT EQUALLY SPACED INTERVALS (15 FT. MIN, 30 FT. MAX), BETWEEN EXPANSION JOINTS OR FOR STRUCTURES WITH INTEGRAL ABUTMENTS. PROVIDE CONTRACTION JOINT AT JOINT BETWEEN DECK AND APPROACH SLAB.

ESTIMATED QUANTITIES

(FOR CONTRACTOR'S INFORMATION ONLY)

ITEM	UNIT	TOTAL
REINFORCING BARS	LBS./FT.	27.1
CONCRETE	CU. YD./FT.	0.14

THE QUANTITIES SHOWN IN THE ABOVE TABLE ARE BASED ON TYPE 42A WITH "T" = 10" AND VARY WITH THE TYPE OF BARRIER RAIL SELECTED.

RAY M. TRUJILLO NEW MEXICO 13514 4/3/12 REGISTERED PROFESSIONAL ENGINEER

	DATE	BY	DESCRIPTION

REVISIONS (OR CHANGE NOTICES)

NEW MEXICO
DEPARTMENT OF TRANSPORTATION
STANDARD DRAWING

42" CONCRETE BRIDGE BARRIER RAILING GENERAL DETAILS

DESIGNED BY: DRAWN BY: SKL CHECKED BY: YML/TM

514-03-1/6 1 of 8

REGION	STATE	RESERVATION	ROUTE	PROJECT NO.	SHEET	TOTAL SHEETS
NORTH	NEW MEXICO	NAVAJO	N5012	N5012(1)1,2&4	68	75

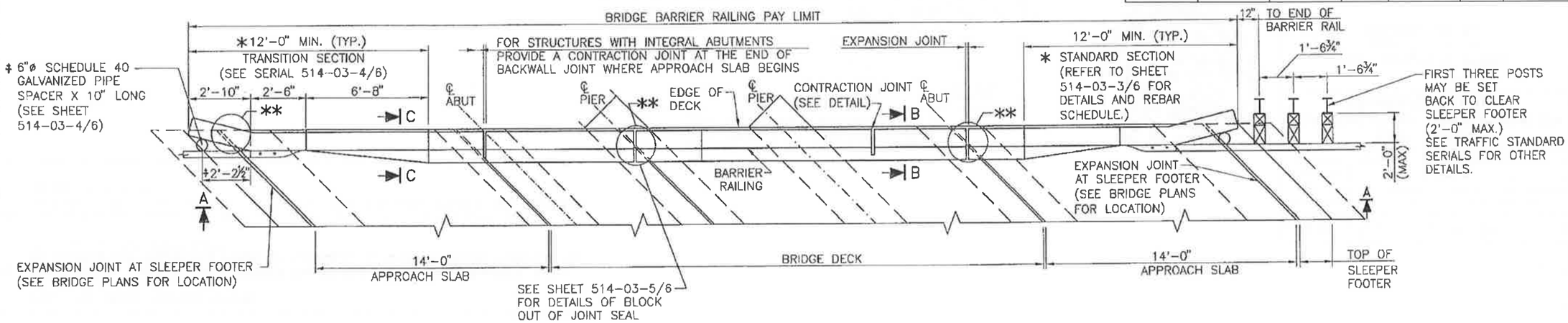

* USE TRANSITION SECTION ONLY WHERE AN ATTACHMENT TO METAL BARRIER IS TO BE MADE. AT ALL OTHER LOCATIONS CARRY STANDARD SECTION THROUGH APPROACH SLAB. (REFER TO SHEET 514-03-4/6 FOR DETAILS AND REBAR SCHEDULE.)

TYPICAL PARTIAL PLAN

** PROVIDE NOTCHES TO ACCOMODATE EXPANSION JOINT EXTENSION ON THE BARRIER RAILING 1'-0" WIDE x 8" HIGH AT EACH ELEMENT.

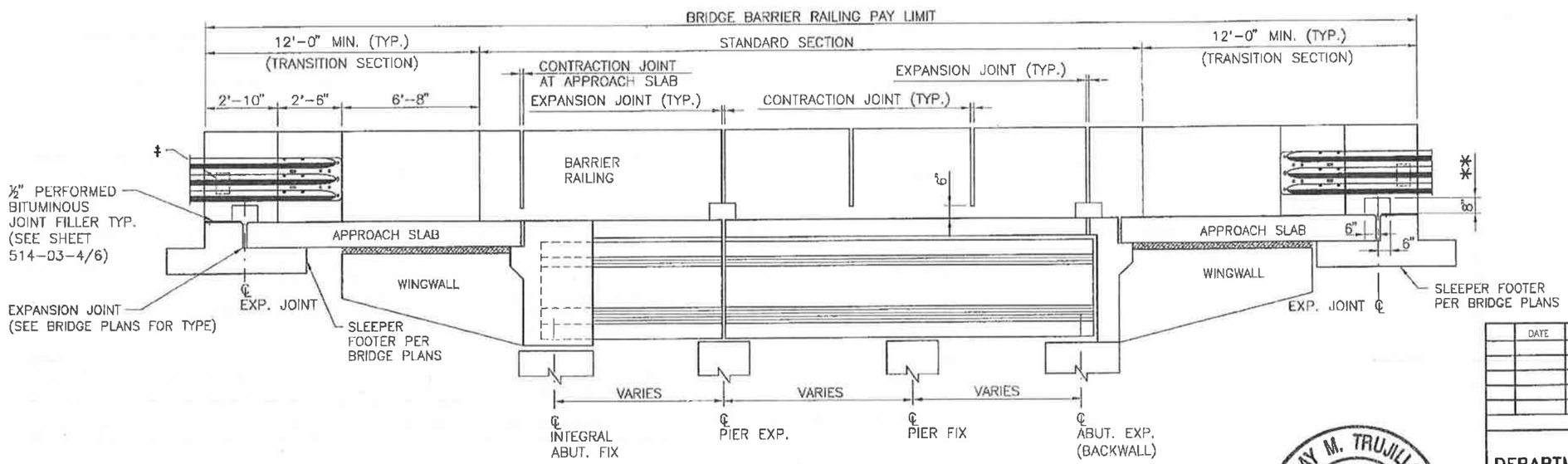

SECTION A-A

RAY M. TRUJILLO NEW MEXICO 13514 REGISTERED PROFESSIONAL ENGINEER 4/13/12

	DATE	BY	DESCRIPTION

REVISIONS (OR CHANGE NOTICES)

NEW MEXICO DEPARTMENT OF TRANSPORTATION STANDARD DRAWING

42" CONCRETE BRIDGE BARRIER RAILING GENERAL DETAILS

DESIGNED BY: DRAWN BY: SKL CHECKED BY: YML/TM

514-03-2/6 2 of 8

REGION	STATE	RESERVATION	ROUTE	PROJECT NO.	SHEET	TOTAL SHEETS
NORTH	NEW MEXICO	NAVAJO	N5012	N5012(1)1,2&4	69	75

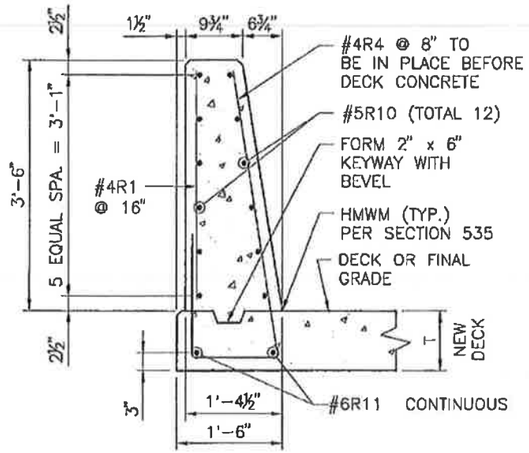

TYPE 42A

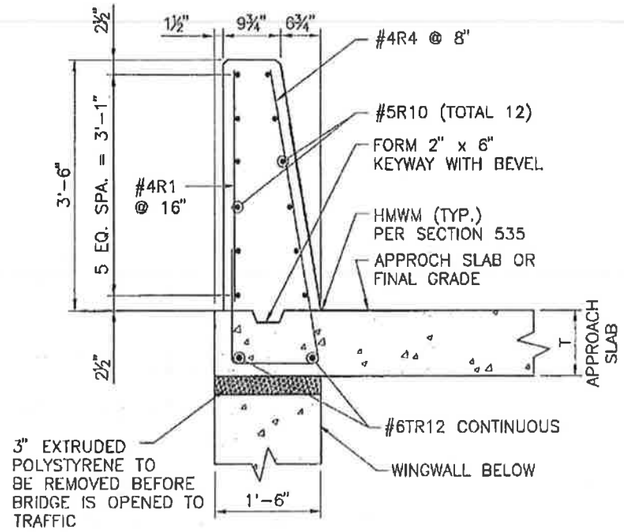

SECTION C-C

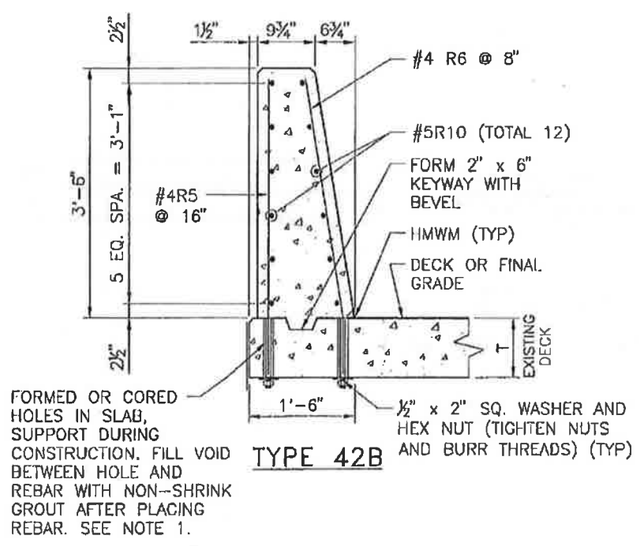

TYPE 42B

SECTION B-B

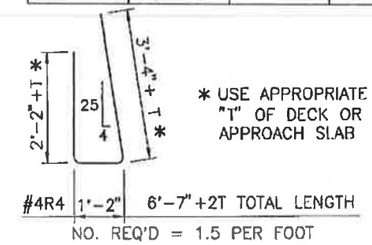

NO. REQ'D = 1.5 PER FOOT

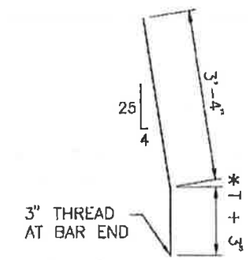

** #4R6 3'-7" + T (TOTAL LENGTH)

NO. REQ'D = 1.5 PER FOOT

REBAR SCHEDULE

MARK	LENGTH	NO. REQ'D PER FOOT
#4R1	3'-2"	0.75
** #4R5	3'-7" + T	0.75
#5R10	VARIES	12.00
#6R11	VARIES	2.00
#6TR12	VARIES	2.00

**THREAD ONE END 3"

NOTES:

1. MATERIAL TO BE USED FOR GROUTING SHALL COMPLY WITH SECTION 523 OF THE NEW MEXICO STATE DEPARTMENT OF TRANSPORTATION STANDARD SPECIFICATIONS FOR HIGHWAY AND BRIDGE CONSTRUCTION, LATEST EDITION AND SHALL BE APPROVED BY THE PROJECT MANAGER.
2. ALL METAL PARTS THAT ARE LEFT EXPOSED SHALL BE GALVANIZED.
3. USE THE SAME TYPE OF REINFORCEMENT FOR WALL BARRIER AS USED IN DECK.
4. HIGH MOLECULAR WEIGHT METHACRYLATE (HMWM), EXTRUDED POLYSTYRENE AND PREFORMED BITUMINOUS JOINT FILLER WILL BE INCIDENTAL TO THE COMPLETION OF THE WORK AND WILL NOT BE PAID FOR SEPARATELY.

	DATE	BY	DESCRIPTION

REVISIONS (OR CHANGE NOTICES)

NEW MEXICO DEPARTMENT OF TRANSPORTATION STANDARD DRAWING

42" CONCRETE BRIDGE BARRIER RAILING STANDARD SECTION AND DETAILS

DESIGNED BY: ___ DRAWN BY: SKL CHECKED BY: YML/TM

514-03-3/6

REGION	STATE	RESERVATION	ROUTE	PROJECT NO.	SHEET	TOTAL SHEETS
NORTH	NEW MEXICO	NAVAJO	N5012	N5012(1)1,2&4	70	75

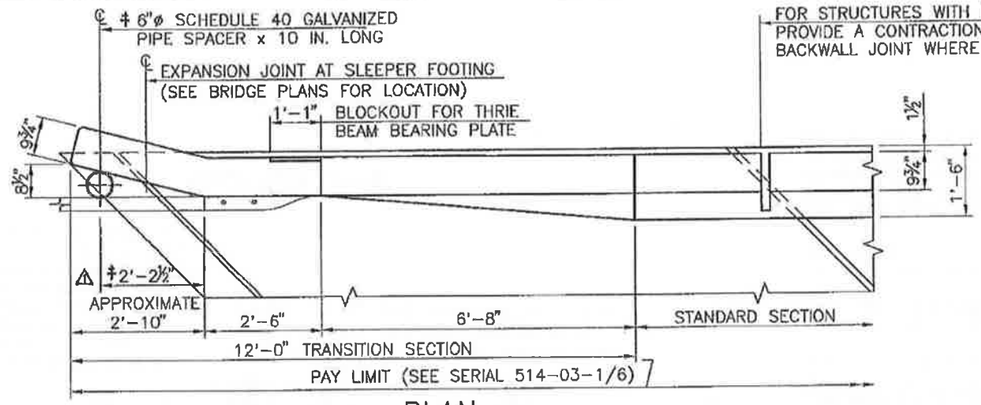

PLAN

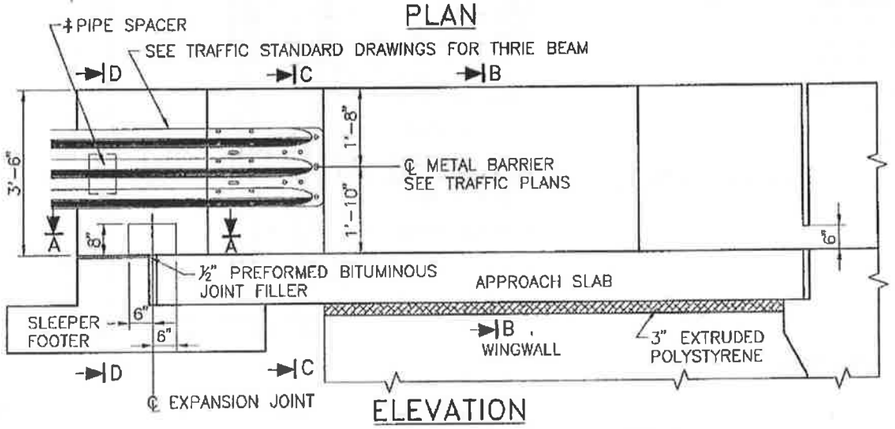

ELEVATION

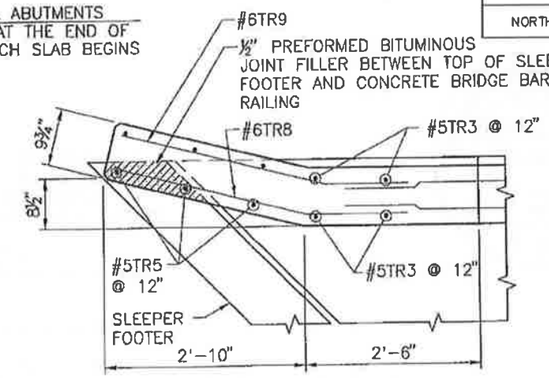

SECTION A-A

‡ ONE ⅞" HIGH TENSILE STRENGTH BOLT IS REQUIRED FOR THE ATTACHMENT OF THE SCHEDULE 40 PIPE SPACER TO THE CONCRETE BARRIER. LENGTH TO BE DETERMINED IN THE FIELD BY THE PROJECT MANAGER. HOLES FOR BOLTS SHALL BE 1" DIAMETER AND SHALL BE EITHER FORMED OR CORE DRILLED. MOVE SPACER RIGHT OR LEFT AS REQUIRED TO FIT SNUGLY BETWEEN BARRIER AND THRIE BEAM.

NOTE:
BEVEL VARIES FROM 4" TO 0" IN 11 EQUAL INCREMENTS. "V" VARIES FROM 1'-2" TO 5" IN 11 EQUAL INCREMENTS.

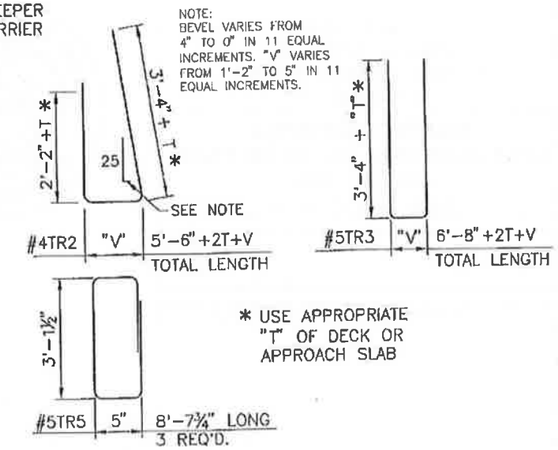

* USE APPROPRIATE "T" OF DECK OR APPROACH SLAB

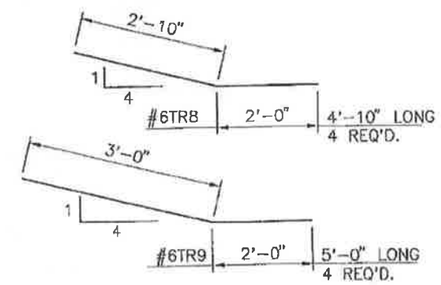

ESTIMATED QUANTITIES
(FOR ONE TRANSITION)

ITEM	UNIT	TOTAL
REINFORCING BARS	LBS.	295
CONCRETE	CU. YDS.	1.5

FOR CONTRACTOR'S INFORMATION ONLY

#4TR1	3'-2"	6 REQ'D.
#5TR10	VARIES	12 REQ'D.
#6TR12	VARIES	2 REQ'D.

REBAR SCHEDULE
(FOR ONE TRANSITION)

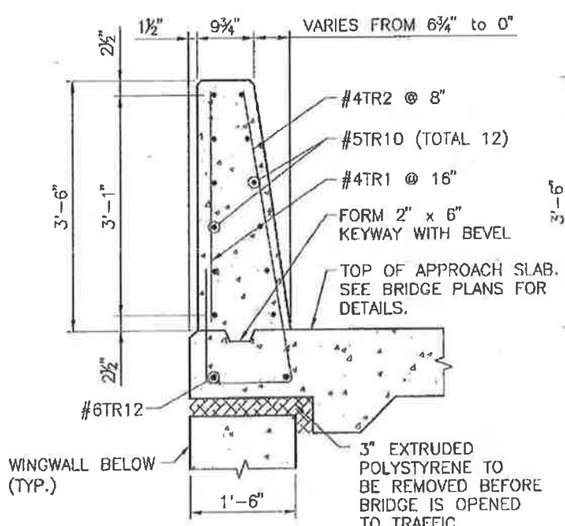

SECTION B-B

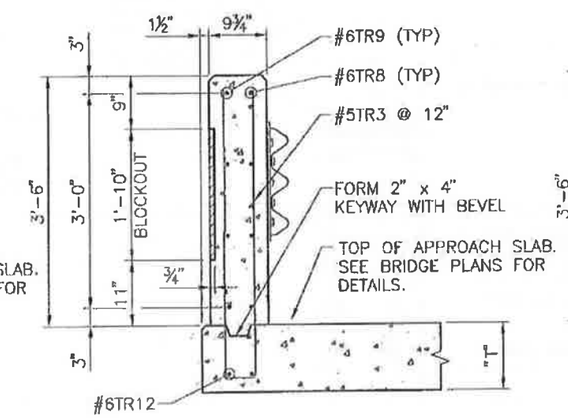

SECTION C-C

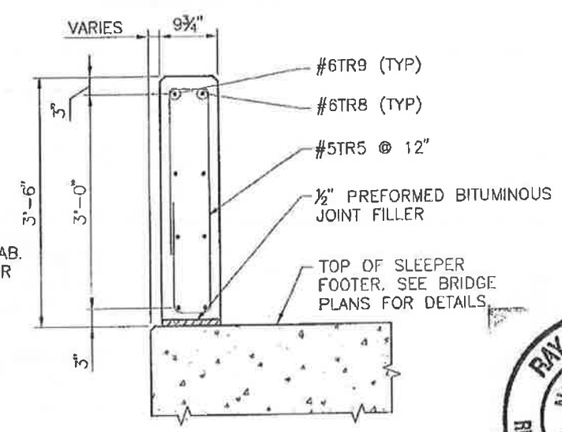

SECTION D-D

	DATE	BY	DESCRIPTION
1	12/27/12	TM	REVISED DIMENSION

REVISIONS (OR CHANGE NOTICES)

NEW MEXICO DEPARTMENT OF TRANSPORTATION STANDARD DRAWING

42" CONCRETE BRIDGE BARRIER RAILING TRANSITION SECTION AND DETAILS

DESIGNED BY: DRAWN BY: SKL CHECKED BY: YML/TM

514-03-4/6

REGION	STATE	RESERVATION	ROUTE	PROJECT NO.	SHEET	TOTAL SHEETS
NORTH	NEW MEXICO	NAVAJO	N5012	N5012(1)1,2&4	71	75

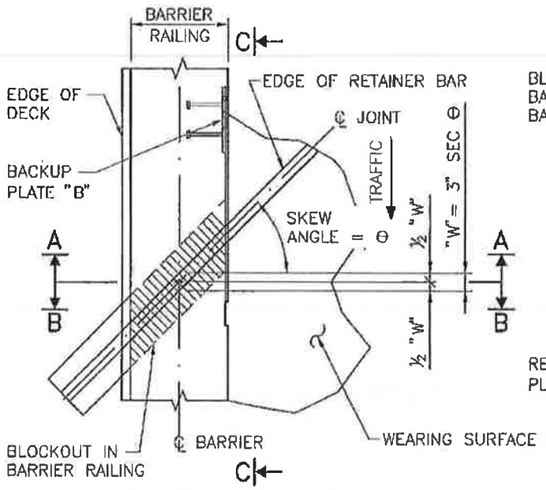

PART PLAN–SKEW JOINT AT CONCRETE BARRIER RAILING

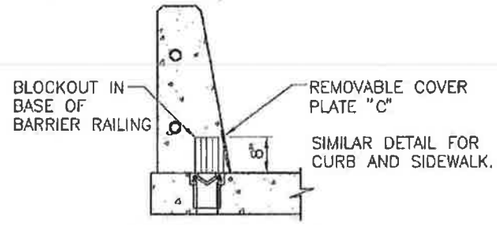

SECTION A–A

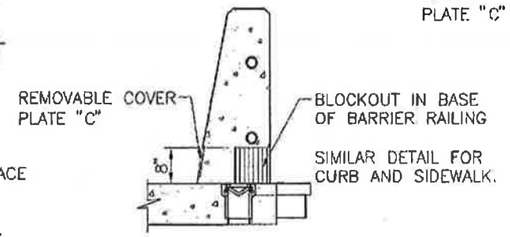

SECTION B–B

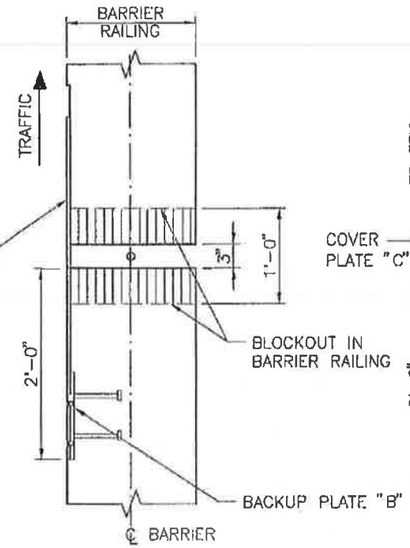

NORMAL

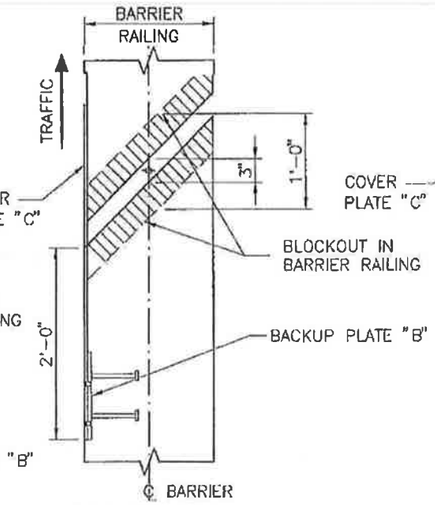

RF SKEW

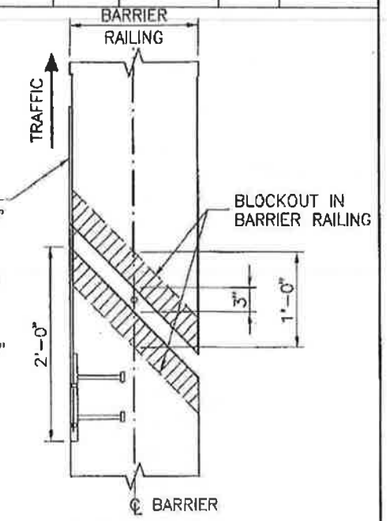

LF SKEW

BACKUP PLATE "B" LOCATIONS IN PLAN VIEW

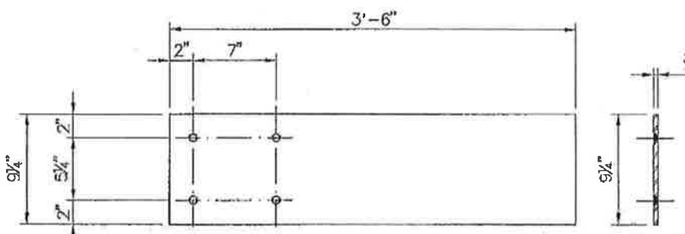

REMOVABLE COVER PLATE "C"

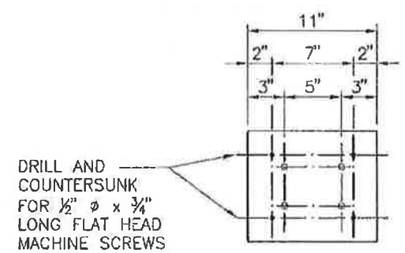

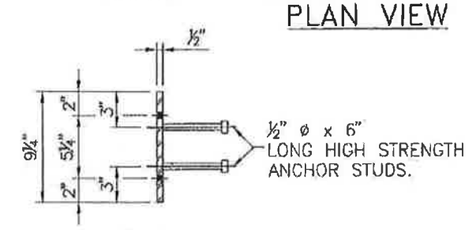

BACKUP PLATE "B"

NOTE:

1. SEE GENERAL NOTE 10 ON SHEET 514–03–1/6.
2. APPLICABLE FOR SKEWS UP TO 45 DEGREES. IF THE SKEW IS LARGER THAN 45 DEGREES THEN THE ENGINEER MUST ENSURE THAT THE STUDS ON THE BACKUP PLATE HAVE ADEQUATE CONCRETE COVER.

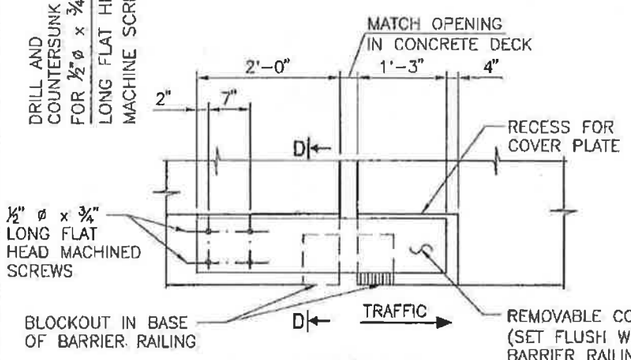

ELEVATION C–C

PROVIDE EXPANSION JOINT IN BARRIER RAILING AT EACH BRIDGE EXPANSION JOINT. REFER TO SERIAL NO. 514–03–6/6 DOWEL ASSEMBLY FOR EXPANSION JOINTS IN 42 INCH CONCRETE WALL BARRIER AND CONCRETE BRIDGE BARRIER RAILING FOR DETAILS OF THE JOINT, FORMING MATERIALS AND DOWELS.

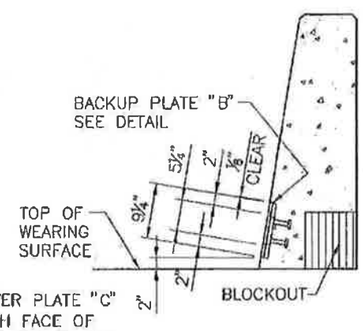

SECTION D–D

ESTIMATED QUANTITIES
(FOR ONE EXPANSION PLATE ASSEMBLY)

ITEM	UNIT	TOTAL
STRUCTURAL STEEL	LBS.	57

FOR CONTRACTOR'S INFORMATION ONLY

RAY M. TRUJILLO
NEW MEXICO
13514
4/3/12
REGISTERED PROFESSIONAL ENGINEER

	DATE	BY	DESCRIPTION

REVISIONS (OR CHANGE NOTICES)

NEW MEXICO DEPARTMENT OF TRANSPORTATION STANDARD DRAWING

42" CONCRETE BRIDGE BARRIER RAILING DETAILS AT JOINT SEALS

DESIGNED BY: ___ DRAWN BY: SKL CHECKED BY: YML/TM

514–03–5/6 5 of 6

REGION	STATE	RESERVATION	ROUTE	PROJECT NO.	SHEET	TOTAL SHEETS
NORTH	NEW MEXICO	NAVAJO	N5012	N5012(1)1,2&4	72	75

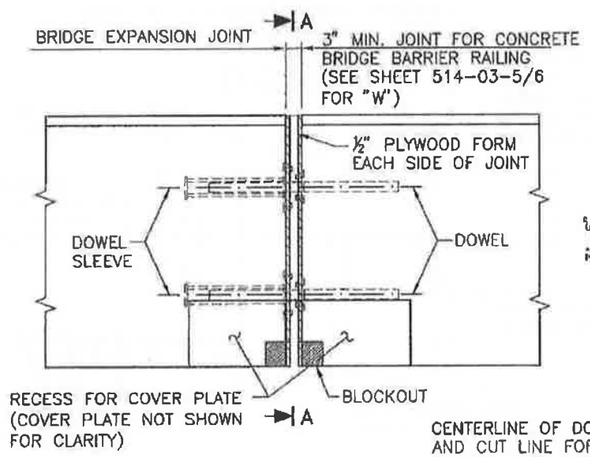

ASSEMBLY DETAIL

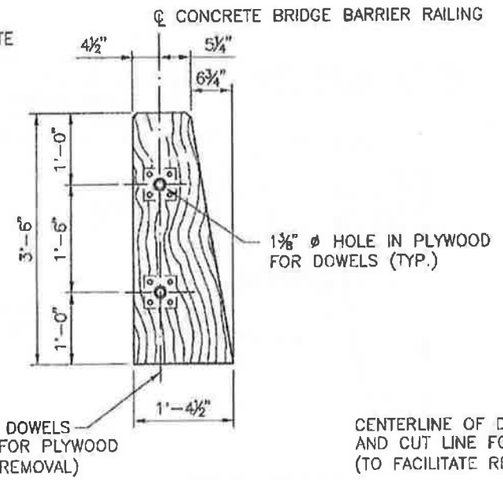

SECTION A-A

CONCRETE BRIDGE BARRIER RAILING

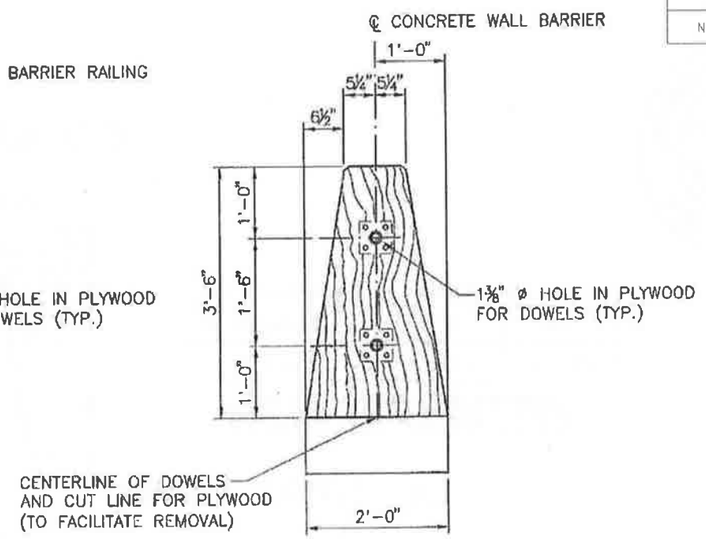

SECTION A-A

CONCRETE WALL BARRIER

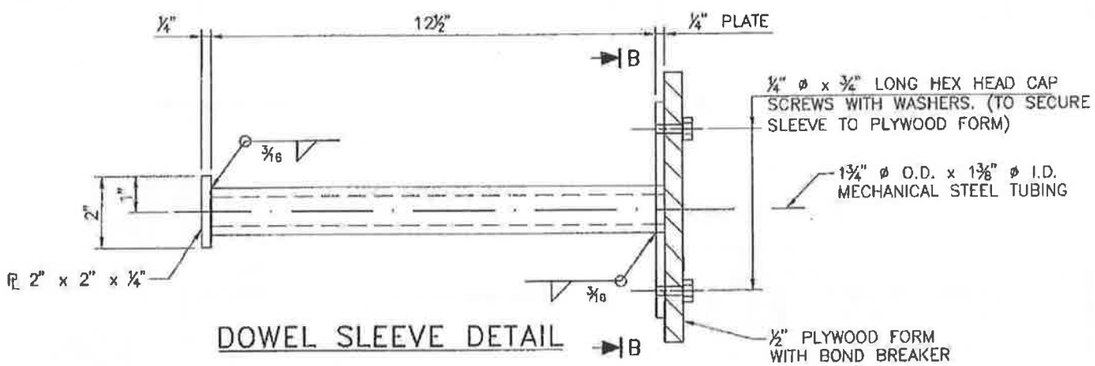

DOWEL SLEEVE DETAIL

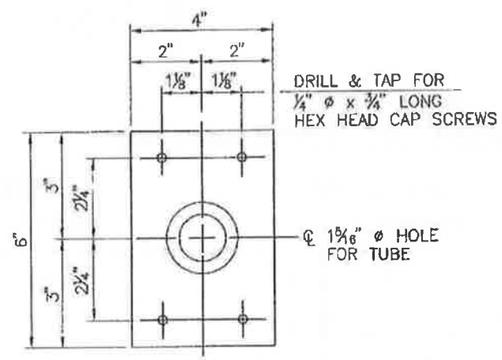

SECTION B-B

¼" THICK PLATE

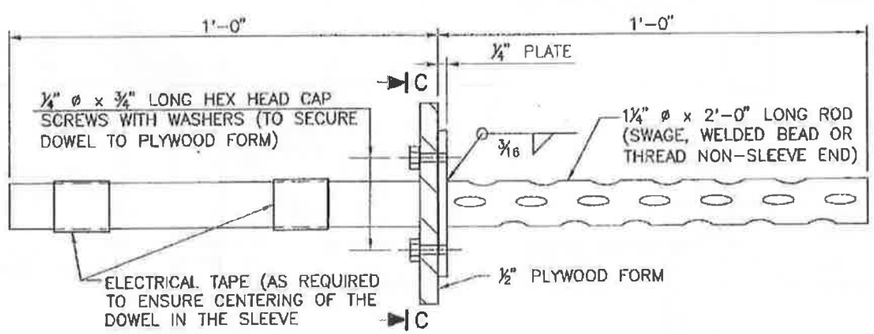

DOWEL DETAIL

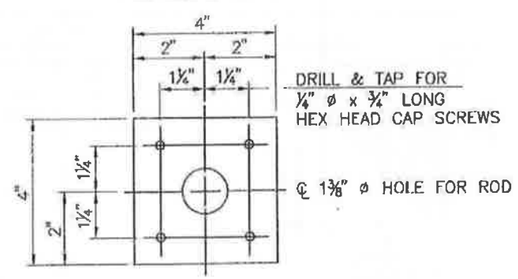

SECTION C-C

1/4 IN. THICK PLATE

GENERAL NOTES

1. WORKMANSHIP AND MATERIALS SHALL CONFORM TO THE FP-14 SPECIFICATIONS.
2. STRUCTURAL STEEL SHALL CONFORM TO ASTM A-36 UNLESS OTHERWISE NOTED ON THE DETAILS, AND SHALL BE GALVANIZED IN ACCORDANCE WITH SECTION 555 OF THE STANDARD SPECIFICATIONS.
3. THE SLEEVE ASSEMBLY SHALL BE SET PARALLEL TO THE BRIDGE DECK GRADE AND THE OUTSIDE FACE OF THE CONCRETE BARRIER RAILING.
4. AFTER CONCRETE HAS TAKEN INITIAL SET, REMOVE STYROFOAM FILLER AND PLYWOOD FORMS FROM THE JOINT.
5. PLYWOOD FORMS AND STYROFOAM FILLER SHALL BE CUT TO THE CROSS SECTION OF THE CONCRETE BARRIER RAILING. PLYWOOD FORMS SHALL BE COATED WITH AN APPROVED BOND-BREAKER.
6. FOR MOVEMENT LENGTHS IN EXCESS OF 300 FEET INCREASE JOINT OPENING "W" AS REQUIRED.
7. THE COST OF ALL MATERIALS AND INSTALLATION FOR THE JOINTS SHALL BE CONSIDERED INCIDENTAL TO THE COST OF THE BRIDGE BARRIER RAILING OR CONCRETE WALL BARRIER AND THEREFORE NO DIRECT PAYMENT WILL BE MADE.
8. GALVANIZE DOWEL AND DOWEL SLEEVE ASSEMBLY.

	DATE	BY	DESCRIPTION

REVISIONS (OR CHANGE NOTICES)

NEW MEXICO DEPARTMENT OF TRANSPORTATION STANDARD DRAWING

DOWEL ASSEMBLY FOR EXPANSION JOINTS IN 42" CONCRETE WALL BARRIER AND CONCRETE BRIDGE BARRIER RAILING

DESIGNED BY: ____ DRAWN BY: SKL CHECKED BY: YML/TM

514-03-6/6