KAYENTA WWTP
CONTINUOUS FEED-INTERMITTENT DISCHARGE (CFID) POND SYSTEM
NAVAJO TRIBAL UTILITY AUTHORITY
KAYENTA, ARIZONA

SITE LOCATION
NTS

VICINITY MAP
NTS

DATE OF PREPARATION:
ORIGINAL ISSUE: 07/14/2023

ENGINEER AND GEOTECHNICAL CONSULTANT:
WSP
43221 BALLOON PARK RD NE
ALBUQUERQUE, NM 87109
(505) 821-1801

THIS PLAN SET IS BASED ON AERIAL PHOTOGRAPHY.
THE CONTRACTOR IS SPECIFICALLY CAUTIONED THAT THE EXISTING INFORMATION SHOWN ON THESE PLANS IS NOT TO BE RELIED ON AS BEING EXACT OR COMPLETE.
THE CONTRACTOR WILL BE RESPONSIBLE FOR FIELD VERIFYING LOCATIONS AND DEPTHS OF EXISTING UTILITIES BEFORE COMMENCING CONSTRUCTION.
THE CONTRACTOR MUST ALSO CALL 811 AND NAVAJO TRIBAL UTILITY AUTHORITY, P.O. BOX 170, FORT DEFIANCE, AZ, 86504 AT 928-729-5721 AT LEAST 3 WORKING DAYS BEFORE ANY EXCAVATION TO REQUEST EXACT FIELD LOCATION OF UTILITIES.

SHEET INDEX

	SHEET NO.	SHEET TITLE
1	G-001	COVER SHEET
2	G-002	GENERAL NOTES AND LEGEND
3	C-100	EXISTING CONDITIONS & DEMOLITION PLAN
4	C-101	CFID POND SYSTEM
5	C-200	GRADING PLAN
6	C-201	GRADING PROFILES
7	C-202	SEWER LINE PLAN AND PROFILE
8	C-203	SEWER LINE PLAN AND PROFILE
9	C-204	SEWER LINE PLAN AND PROFILE
10	C-205	SEWER LINE PLAN AND PROFILE
11	C-206	SEWER LINE PLAN AND PROFILE
12	C-207	SEWER LINE PLAN AND PROFILE
13	C-208	SEWER LINE PLAN AND PROFILE
14	C-209	SEWER LINE PLAN AND PROFILE
15	C-210	SEWER LINE PLAN AND PROFILE
16	C-301	DISCHARGE STRUCTURE PLAN, PROFILE, AND DETAILS
17	C-302	DIFUSER DETAILS
18	C-303	DISCHARGE STRUCTURE DETAILS
19	C-304	MLSS PUMP STATION DETAILS
20	C-305	MLSS VALVE VAULT DETAILS
21	C-306	EFFLUENT PUMP STATION DETAILS
22	C-307	EFFLUENT VALVE VAULT DETAILS
23	C-308	DIVERSION BOX DETAILS
24	C-309	DETAILS
25	C-310	DETAILS
26	C-311	MANHOLE DETAILS
27	C-312	FLOATING DECANTER DETAILS
28	C-313	BAFFLE CURTAIN DETAILS
29	C-400	BIOFUSER DETAILS
30	C-401	BLOWER SYSTEM DETAILS
31	C-402	HDPE LINER DETAILS
32	E-100	KAYENTA SITE LAYOUT
33	E-101	KAYENTA SWITCHBOARD
34	E-102	KAYENTA CONTROL PANEL
35	K-A01	TITLE PAGE
36	K-A02	PROCESS FLOW SYMBOLS & NOTES PG. 1 - P & ID
37	K-A03	PROCESS FLOW SYMBOLS & NOTES PG. 2 - P & ID
38	K-A04	PROCESS FLOW SYMBOLS & NOTES PG. 3 - P & ID
39	K-A05	PROCESS FLOW SYMBOLS & NOTES PG.4 - P & ID
40	K-C01	AREA MAP AND CONSTRUCTION NOTES
41	K-C02	AERATOR PUMP PLACEMENT DIAGRAM
42	K-D01	NETWORK AND CONDUIT DIAGRAM: PANEL AND FIELD
43	K-E00	480VAC THREE-LINE DIAGRAM
44	K-E01	480VAC THREE-LINE DIAGRAM
45	K-E02	480VAC THREE-LINE DIAGRAM
46	K-F01	120VAC SCHEMATIC
47	K-G01	24VDC SCHEMATIC
48	K-H00	PLC POWER AND COMMUNICATION - RACK 1 MODULE 00
49	K-H01	I/O SCHEMATIC PLC RACK 1 MODULES 01 & 02
50	K-H02	I/O SCHEMATIC PLC RACK 1 MODULE 03
51	K-H03	I/O SCHEMATIC PLC RACK 1 MODULE 04
52	K-H04	I/O SCHEMATIC PLC RACK 1 MODULE 05
53	K-M01	ASSEMBLY DRAWING ENCLOSURE
54	K-M02	ASSEMBLY DRAWING BACKPLATE
55	K-M03	BILL OF MATERIALS

wsp
4221 BALLOON PARK RD NE
ALBUQUERQUE, NM 87109
TEL: (505) 821-1801

W. DANIEL BOIVIN
NEW MEXICO
12933
PROFESSIONAL ENGINEER
07/14/2023
FINAL

PROJECT:
KAYENTA WWTP
CFID
POND SYSTEM
FINAL DESIGN

NAVAJO TRIBAL UTILITY AUTHORITY
PO BOX 170
FT. DEFIANCE, AZ 86504
WSP PROJECT No:
2151700011

REVISIONS

NO.	DATE	BY	APPROVED

DESIGNED BY:	WSP – BM
DRAWN BY:	WSP – AO
CHECKED BY:	WSP – BM
APPROVED BY:	WSP – BM
DATE:	07/14/2023

SHEET TITLE:
COVER SHEET

SHEET NUMBER: G-001
REV. #
SHEET 1 OF 52 SHEETS

P:\consulting\projects\22\22-517-00011.NTUA-HPP Kayenta WWF\CAD\1.G-001_COVER SHEET.dwg

GENERAL NOTES:

QUALITY CONTROL

1.0 UNLESS OTHERWISE STATED, INDIAN HEALTH SERVICE (IHS)/NAVAJO ENGINEERING AND CONSTRUCTION AUTHORITY (NECA) SPECIFICATIONS (REV 1.5) AND INDIAN HEALTH SERVICE STANDARD DETAILS FOR WATER (REV 3.2) AND SEWER (REV 1.9) SHALL CONTROL THE MATERIALS AND WORKMANSHIP OF THIS PROJECT WHETHER SPECIFICALLY CALLED OUT OR NOT. THE IHS/NECA SPECIFICATIONS ARE A SEPARATE VOLUME AND NOT ISSUED AS PART OF THE CONSTRUCTION SET. SPECIFICATION SECTIONS AND STANDARD DRAWINGS, WHEN NOTED HEREIN, REFER TO CORRESPONDING PARTS OF THESE DOCUMENTS.

2.0 IF DURING THE COURSE OF WORK THE CONTRACTOR BECOMES AWARE OF A CONTRADICTION IN THE REQUIREMENTS BETWEEN THE STANDARD SPECIFICATIONS AND DRAWINGS AND THESE PLANS, THE CONTRACTOR SHALL NOTIFY THE ENGINEER.

SAFETY

3.0 THE CONTRACTOR IS SOLELY RESPONSIBLE FOR JOBSITE SAFETY AND FOR KNOWLEDGE AND COMPLIANCE WITH APPLICABLE O.S.H.A. STANDARDS AND OTHER FEDERAL, STATE, TRIBAL AND LOCAL SAFETY AND WORKPLACE COMPLIANCE REQUIREMENTS.

EXISTING CONDITIONS

4.0 THE LOCATION OF EXISTING UTILITIES, AS SHOWN ON THE DRAWINGS, ARE APPROXIMATE. THE CONTRACTOR IS RESPONSIBLE FOR THE ACCURATE LOCATION IN THE FIELD.

5.0 IF EVIDENCE OF SUBSURFACE ARCHAEOLOGICAL OR HISTORIC FEATURES ARE OBSERVED DURING CONSTRUCTION, THE CONTRACTOR SHALL IMMEDIATELY HALT CONSTRUCTION IN THE AREA, PROTECT THE SITE, AND NOTIFY THE ENGINEER. NO CONSTRUCTION ACTIVITY SHALL OCCUR WITHIN THE 50 FOOT BUFFER AROUND THE EXISTING ARCHAEOLOGICAL SITE UNTIL APPROVED.

PROJECT CONTROL

6.0 PROJECT CONTROL SHOWN HEREON WAS ESTABLISHED REAL TIME KINEMATIC OBSERVATIONS FROM NATIONAL GEODETIC SURVEY CONTROL POINTS .
HORIZONTAL DATUM: AZSPCS EAST ZONE MODIFIED,
C.S.F= 1.000364 TO BE UTILIZED AS "GROUND" COORDINATES.
VERTICAL DATUM: NAVD88 (2011)
BRASS CAP CONTROL POINTS THAT HAVE BEEN INSTALLED ONSITE ARE THE BASIS OF HORIZONTAL CONTROL. THE CONTROL POINTS SHALL BE MAINTAINED AND REMAIN UNDISTURBED DURING CONSTRUCTION AND WILL SERVE AS HORIZONTAL CONTROL POINTS FOR THE PROJECT.

CONTROL POINTS

PONT ID	NORTHING	EASTING	ELEVATION	DESCRIPTION
POINT #31	2086500.524	677621.233	5617.04	NGS DESIGNATION C 31 (PID GP0017) BENCHMARK DISK SET IN ROCK OUTCROP
POINT #14	2083176.851	673769.838	5684.56	NGS DESIGNATION K 513 (PID GP0401) FLANGED ENCASED STEEL ROD
POINT #99	2087492.206	679800.167	5596.96	SET 1/2" REBAR W/RED CONTROL CAP

7.0 SCALES IN THESE PLANS ARE VALID WHEN PLOTTED ON 22"X34" (ANSI).

WORK AREA

8.0 THE CONTRACTOR SHALL CONFINE WORK TO WITHIN THE PRESCRIBED CONSTRUCTION LIMITS, EASEMENT, RIGHT-OF-WAY OR PROPERTY.

9.0 THE CONTRACTOR SHALL COORDINATE ACTIVITIES WITH THE OWNER AND ENGINEER TO MINIMIZE ACCESS TO ADJACENT PROPERTIES AND TRAFFIC DISRUPTIONS.

10.0 THE CONTRACTOR SHALL ACQUIRE THE NECESSARY LICENSES OR PERMITS WHEN WORKING WITHIN OR NEAR A RIGHT-OF-WAY, STREET, ROAD OR HIGHWAY, SIDEWALK, TRAIL, OR OTHER PUBLIC THOROUGHFARE AND SHALL INCORPORATE THE REQUIREMENTS OF SAID LICENSE/PERMIT.

11.0 WHEN WORKING IN OR NEAR TRAFFIC THE CONTRACTOR SHALL (AT A MINIMUM) PROVIDE, ADEQUATE SIGNS, BARRICADES, WARNING LIGHTS, AND FLAGGERS TO ENSURE THE SAFETY/PROTECTION OF THE PUBLIC, EMPLOYEES, AND THE WORK IN ACCORDANCE WITH THE "MANUAL ON UNIFORM TRAFFIC CONTROL DEVICES" (MUTCD), LATEST EDITION.

12.0 IT WILL BE THE CONTRACTOR'S RESPONSIBILITY TO MAINTAIN ACCESS TO EXISTING RESIDENCES, BUSINESSES, TURNOUTS AND INTERSECTING ROADS AT ALL TIMES DURING CONSTRUCTION.

13.0 IF A FENCED/SECURE STORAGE AREA FOR MATERIALS AND EQUIPMENT IS DESIRED, THE CONTRACTOR SHALL BE RESPONSIBLE FOR OBTAINING AN AREA OFF THE PROJECT SITE. USING THE AREA FOR STORAGE SHALL COMPLY WITH LOCAL ZONING OR OTHER ORDINANCES AND SHALL BE PERMITTED, IF REQUIRED.

14.0 OVERNIGHT PARKING OF CONTRACTOR'S EQUIPMENT SHALL NOT OBSTRUCT ACCESS OR DESIGNATED TRAFFIC LANES. THE CONTRACTOR SHALL PARK OR STORE EQUIPMENT AT SAFE DISTANCES FROM THE TRAVELED WAY.

15.0 THE CONTRACTOR IS RESPONSIBLE FOR SOIL EROSION, DRAINAGE CONTROL AND DUST DURING CONSTRUCTION AND MUST, WHEN APPLICABLE, PREPARE AND ADHERE TO A STORM WATER POLLUTION PREVENTION PLAN (SWPPP) PREPARED ACCORDING TO THE U.S. ENVIRONMENTAL PROTECTION AGENCY'S CONSTRUCTION GENERAL PERMIT(CGP).

OTHER UTILITIES

16.0 THE CARE AND PROTECTION OF OTHER UTILITIES, STREET APPURTENANCES, DRAINAGE STRUCTURES AND OTHER INFRASTRUCTURE, WHETHER PUBLIC OR PRIVATE, THAT ARE NOT PART OF THE INTENDED WORK ARE THE RESPONSIBILITY OF THE CONTRACTOR.

17.0 WHERE TRENCHING AROUND OR BENEATH EXISTING UTILITY LINES OCCURS, THE CONTRACTOR WILL BE RESPONSIBLE FOR COORDINATING WITH THE UTILITY OWNER AND FOR SUPPORTING THE UTILITY LINE, AS REQUIRED BY THE UTILITY OWNER, DURING CONSTRUCTION. THE CONTRACTOR SHALL BE RESPONSIBLE FOR ASSURING THE UTILITY IS ADEQUATELY SUPPORTED BY COMPACTED BACKFILL OR OTHER MEANS AT THE COMPLETION OF CONSTRUCTION AS REQUIRED BY THE UTILITY OWNER. IF THE TECHNIQUES REQUIRED FOR STABILIZING OTHER UTILITIES CONFLICT WITH THE REQUIREMENTS OF THIS PROJECT THE CONTRACTOR SHALL NOTIFY THE ENGINEER.

EXCESS MATERIAL & DEBRIS

18.0 ANY EXTRA NATURAL SOIL (CLEAN OF OIL AND CHEMICALS) REMAINING AFTER BACKFILL AND COMPACTION MAY BE DISPOSED AT A SITE APPROVED BY THE OWNER. CONTRACTOR SHALL HAUL DEBRIS AND NON-NATURAL SOILS TO A CERTIFIED LANDFILL.

RECORD DRAWINGS

19.0 THE CONTRACTOR SHALL PREPARE AND MAINTAIN AN UP-TO-DATE SET OF RECORD DRAWINGS FOR THE PROJECT. THESE PLANS SHALL BE KEPT CURRENT DAILY AND SHALL BE MADE AVAILABLE FOR REVIEW AS REQUESTED BY THE ENGINEER. THE COST OF PREPARING AND MAINTAINING A RECORD DRAWING SET SHALL BE INCIDENTAL TO THE PROJECT.

STRUCTURAL NOTES:

FOUNDATIONS:

BELOW GRADE FOUNDATIONS SHALL BEAR ON A MINIMUM OF THREE (3) FEET OF GRANULAR NON-EXPANSIVE ENGINEERED FILL UNDERLAIN BY A REINFORCING GEOGRID.

SLABS SHOULD BEAR ON THREE (3) FEET OF NON-EXPANSIVE LOW PERMEABILITY ENGINEERED FILL.

FILL MATERIALS ARE TO CONFORM TO GRADATION AS FOLLOWS.

SIEVE SIZE	PERCENT PASSING
1"	100
NO. 4	50-100
NO.40	35 MAX.

ENGINEERED FILL OR OTHER APPROVED GRANULAR SOILS SHOULD BE PLACED IN A MAXIMUM LIFT NOT TO EXCEED 8", MATERIAL IS TO BE COMPACTED TO 95% ASTM D698 PER GETOECHNICAL REPORT.

THE GEOGRID SHOULD BE PER TESAR TRIAX TX 160 OR EQUIVALENT AS APPROVED BY THE ENGINEER.

ALL EARTH WORK, FOOTING DEPTHS, AND EXCAVATIONS FOR FOUNDATIONS SHALL BE INSPECTED BY THE ENGINEER TO VERIFY ASSUMED ALLOWABLE SOIL BEARING AND LOW SETTLEMENT AND SWELL POTENTIAL, AND TO MAKE ANY ADDITIONAL RECOMMENDATIONS.

CONCRETE:

SHALL MEET ALL THE REQUIREMENTS OF THE CURRENT ISSUE OF THE ACI MANUAL OF CONCRETE PRACTICE, WITH TYPE 1-11 CEMENT. MINIMUM 28 DAY STRENGTH, 3000 PSI, EXCEPT AS FOLLOWS:

FOUNDATIONS, GRADE BEAMS, OR ANY OTHER CONCRETE
IN CONTACT WITH EARTH.....3000 PSI (MAX W/C = 0.45)

CAST IN PLACE SLABS NOT ON GRADE.....4000 PSI

MAXIMUM SLUMP FOR ALL CONCRETE.....5"

CONTRACTOR SHALL SUBMIT FOR APPROVAL CONCRETE MIX DESIGNS FOR EACH CLASS OF CONCRETE. THE MIX SUBMITTAL SHALL INDICATE WHICH OF THE FOLLOWING ACI 318 METHODS THE CONCRETE SUPPLIER ALONG WITH THE TESTING LAB METHOD HE/SHE INTENDS TO USE FOR CONCRETE PROPORTIONING - THE FIELD EXPERIENCE METHOD, THE LABORATORY TRIAL MIXTURE METHOD OR A COMBINATION OF BOTH. IF CONSECUTIVE TESTS (15 TO 30) ARE BEING RELIED UPON PER ACI 318, SECTION 5.3 THOSE TESTS SHALL BE SUBMITTED ALONG WITH THE MIX DESIGNS. MIX DESIGNS SHALL BEAR THE STAMP OF A LICENSED ENGINEER.

NO ADMIXTURES SHALL BE USED WITHOUT APPROVAL. NO AIR ENTRAINMENT SHALL BE ALLOWED IN FLAT SLABS. ADMIXTURES CONTAINING CHLORIDES SHALL NOT BE USED. CONCRETE SHALL NOT BE IN CONTACT WITH ALUMINUM. MECHANICALLY VIBRATE ALL CONCRETE WHEN PLACED. EXCEPT THAT SLABS ON GRADE NEED BE VIBRATED ONLY AROUND EMBEDDED ITEMS. DO NOT TAMP SLABS. USE ROLLER BUG, VIBRATING SCREED OR BULL FLOAT TO FINISH. SEE SPECIFICATIONS FOR CURING.

MINIMUM STRENGTH FOR REMOVAL OF FORMS AND SHORING SHALL BE 75% OF SPECIFIED STRENGTH AT 28 DAYS.

FLY ASH (POZZOLAN) IF PERMITTED PER SPECIFICATIONS SHALL NOT EXCEED 25% REPLACEMENT OF TOTAL CEMENT CONTENT USING A 1:1 REPLACEMENT FACTOR.

REINFORCING:

LATEST ACI CODE AND DETAILING MANUAL APPLY. ALL REINFORCING BARS DEFORMED EXCEPT #2 BARS AND WIRE MESH.

ALL REINFORCING SHALL BE ASTM A-615 GRADE 60 EXCEPT AS FOLLOWS:

SPIRALS.....GRADE 60 OR COLD DRAWN A-82
#2 AND #3 BARS.....GRADE 40
WIRE MESH.....A-185
WELDED ANCHORS.....GRADE 40 CHEMICAL ANALYSIS LIMITED PER AWS SPECIFICATIONS FOR WELD WITHOUT PREHEAT.
WELDED ANCHORS #5 AND LARGER.....ASTM A-706

CLEAR CONCRETE COVER TO REINFORCING ARE AS FOLLOWS:

CAST-IN-PLACE CONCRETE (NONPRESTRESSED):

CAST AGAINST AND PERMANENTLY EXPOSED TO EARTH.....3"

EXPOSED TO EARTH OR WEATHER:
#6 THROUGH #18.....2"
#5 AND SMALLER.....1 1/2"

NOT EXPOSED TO WEATHER OR IN CONTACT WITH GROUND:
SLABS, WALLS: #11 AND SMALLER.....1 1/2"

LAP SPLICES IN CONCRETE SHALL BE CLASS B TENSION LAPS 70 BAR Ø MIN.

WHERE BARS ARE SHOWN SPLICED, THEY MAY RUN CONTINUOUS AT CONTRACTORS OPTION.

PROVIDE SHOP DRAWING AND FABRICATE AFTER THE CONTRACTORS REVIEW. ALL SPLICE LOCATIONS ARE SUBJECT TO APPROVAL, PLACE REBAR PER CRSI STANDARDS.

REBAR SPACING GIVEN IS MAXIMUM ON CENTER AND ALL REBAR IS CONTINUOUS UNLESS OTHERWISE NOTED. PROVIDE BENT CORNER REBAR TO MATCH AND LAP WITH HORIZONTAL REBAR AT CORNERS AND INTERSECTIONS OF WALLS. DOWEL ALL VERTICAL WALL REBAR TO FOUNDATIONS. SECURELY TIE ALL REBAR, INCLUDING DOWELS, IN LOCATION BEFORE PLACING CONCRETE OR GROUT.

LEGEND:

EXISTING		PROPOSED	
6314 6314	TOPOGRAPHIC CONTOUR	6311 6311	TOPOGRAPHIC CONTOUR
X	FENCE	X	FENCE
SS	SANITARY SEWER LINE	SS	SANITARY SEWER LINE
SS	MANHOLE	S	MANHOLE
	POWER POLE		GATE VALVE
OH	OVERHEAD ELECTRIC LINE		BIOLIC DIFFUSER
UE	UNDERGROUND ELECTRIC LINE		AERATOR
W	WATERLINE		

wsp
4221 BALLOON PARK RD NE
ALBUQUERQUE, NM 87109
TEL: (505) 821-1801

W. DANIEL BOIVIN
NEW MEXICO
12933
PROFESSIONAL ENGINEER
07/14/2023

FINAL

PROJECT:
KAYENTA WWTP CFID POND SYSTEM FINAL DESIGN

NAVAJO TRIBAL UTILITY AUTHORITY
PO BOX 170
FT. DEFIANCE, AZ 86504

WSP PROJECT No: 2151700011

REVISIONS

NO.	DATE	BY	APPROVED

DESIGNED BY:	WSP – BM
DRAWN BY:	WSP – AO
CHECKED BY:	WSP – BM
APPROVED BY:	WSP – BM
DATE:	07/14/2023

SHEET TITLE:
GENERAL NOTES & LEGEND

SHEET NUMBER:	REV. #
G-002	

SHEET 2 OF 52 SHEETS

P:\consulting\projects\22\22-517-00011.NTUA-HPP Kayenta WWF\CAD\2.G-002_GENERAL NOTES & LEGEND.dwg

SITE NOTES:

1. CELL 1: ACTIVE WASTE WATER TREATMENT POND
2. CELL 2: ACTIVE WASTE WATER TREATMENT POND
3. CELL 3: ACTIVE WASTE WATER TREATMENT POND
4. CELL 4: CELL TO BE CLEANED AND LINED WITH HDPE.
   THE GEOMETRY OF CELL 4 IS: L= 553', W=282', D=11', VOL.= 10.7 Mgal
5. CELL 5: OFFLINE TO BE USED FOR FILL MATERIAL, SEE SHEET C-200
6. CELL 6: ACTIVE WASTE WATER TREATMENT POND
7. 18" OUTFALL PIPE
8. PLANT DISCHARGE CHANNEL
9. TRANSFORMER AND EMERGENCY POWER GENERATOR
10. TAILWORKS
11. HEADWORKS

DEMOLITION NOTES:

12. ITEMS TO BE DEMOLISHED AND REMOVED FROM SITE

SHEET GENERAL NOTES:

1. UTILITIES ILLUSTRATED ON PLAN ARE PRESENTED FOR CONTRACTOR INFORMATION, IF APPLICABLE. SUBSURFACE UTILITY LOCATES HAVE NOT BEEN FIELD VERIFIED, ACTUAL UTILITIES ARE SUBJECT TO CHANGE AND UNMARKED, UNKNOWN UTILITIES SHOULD BE MITIGATED IN THE FIELD PRIOR TO GROUND DISTURBANCES. COORDINATE WITH NAVAJO TRIBAL UTILITY AUTHORITY (NTUA) IN KAYENTA, AZ, AND ARIZONA ONE-CALL UTILITY LOCATE.

wsp

4221 BALLOON PARK RD NE
ALBUQUERQUE, NM 87109
TEL: (505) 821-1801

W. DANIEL BOIVIN
NEW MEXICO
12933
PROFESSIONAL ENGINEER

07/14/2023

FINAL

PROJECT:
KAYENTA WWTP
CFID
POND SYSTEM
FINAL DESIGN

NAVAJO TRIBAL UTILITY AUTHORITY
PO BOX 170
FT. DEFIANCE, AZ 86504

WSP PROJECT No:
2151700011

REVISIONS			
NO.	DATE	BY	APPROVED

DESIGNED BY:	WSP – BM
DRAWN BY:	WSP – AO
CHECKED BY:	WSP – BM
APPROVED BY:	WSP – BM
DATE:	07/14/2023

SHEET TITLE:
EXISTING SITE CONDITIONS & DEMOLITION PLAN

SHEET NUMBER:	REV. #
C-100	

SHEET 3 OF 52 SHEETS

P:\consulting\projects\22\22-517-00011.NTUA-HPP Kayenta WWF\CAD\3.C-100_EXISTING CONDITIONS & DEMO.dwg

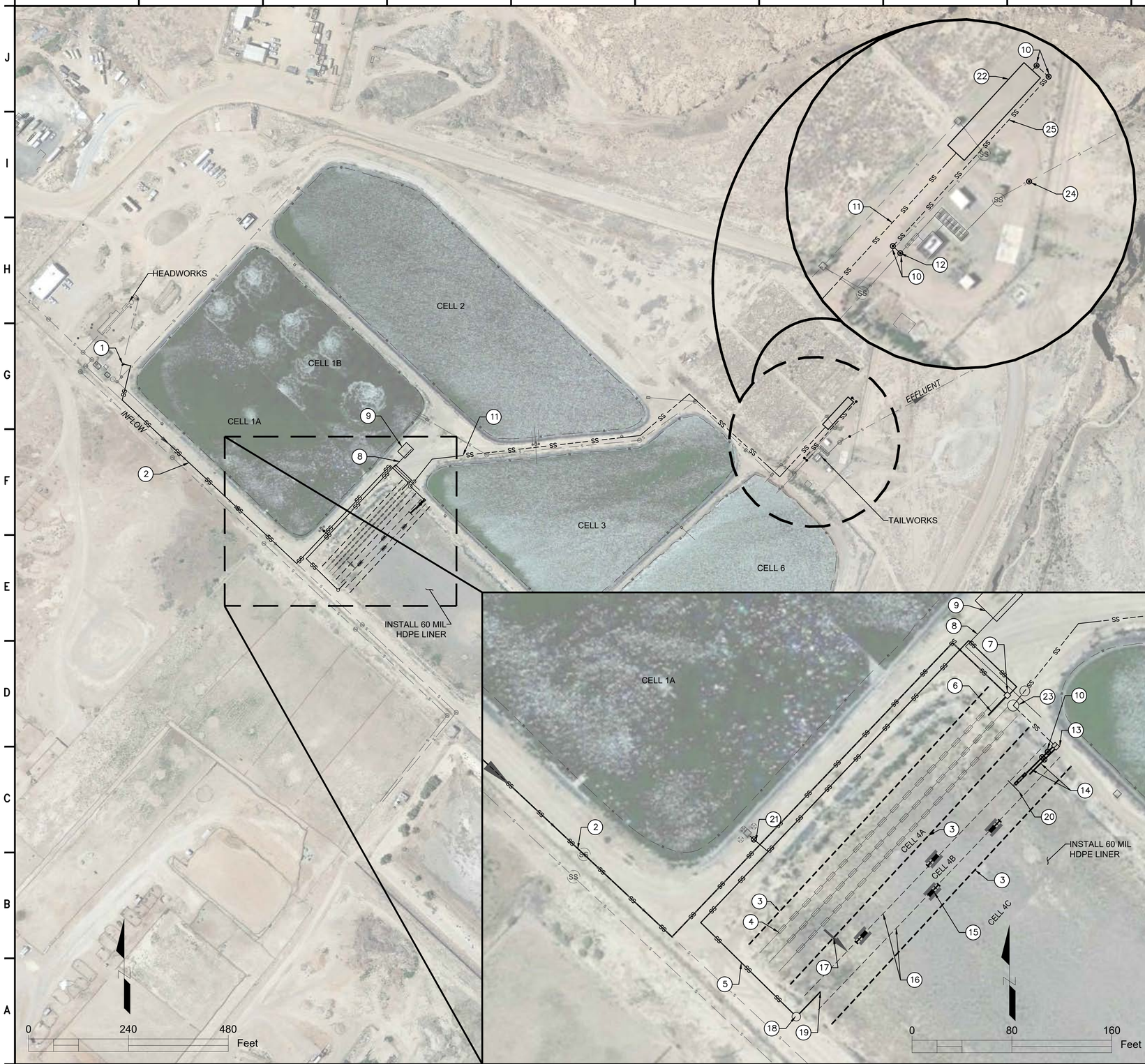

CONSTRUCTION NOTES:

1. CONNECT TO EXISTING 10" PVC FORCE MAIN
2. NEW 8" HDPE FORCE MAIN AND FLOW PATH
3. BAFFLES (FLOATING SYNTHETIC), SEE SHEET C-313
4. BIOLAC AERATION SYSTEM, SEE SHEET C-400
5. 6" SCH 40 PVC MLSS PIPING
6. 20' SECTION 12" DI SANITARY SEWER INLET
7. DIVERSION STRUCTURE, SEE SHEET C-308
8. 10" DI AIR PIPING
9. AERATION BLOWERS WITH CONCRETE PAD, SEE SHEET C-401
10. NEW MANHOLE
11. 12" DUCTILE IRON PIPE FORCE MAIN, 2x CERAMIC EPOXY LINING
12. CONNECT TO EXISTING SEWER LINE, SEE SHEET C-311
13. OUTLET STRUCTURE. SEE DISCHARGE STRUCTURE DETAILS SHEET C-303
14. 20' SECTION -12" DIP SANITARY SEWER WITH MJ GATE VALVE (RMJ x RMJ)
15. INSTALL 4 -15 HP AIRE-O2 ASPIRATING AERATOR BY AERATION INDUSTRIES INTERNATIONAL, LLC. INCLUDES AERATOR, ELECTRICAL CABLES, MOORING CABLES, ETC.
16. AERATOR MOORING CABLES
17. 4' x 3 ' WINDOW IN SYNTHETIC BAFFLE, SEE SHEET C-313
18. MLSS PUMP STATION. SEE SHEET C-304
19. 20' SECTION- 8" DIP WITH MJ GATE VALVE (RMJ x RMJ)
20. FLOATING DECANTER, SEE SHEET C-312
21. 3" PVC MLSS LINE, SEE SHEET C-309
22. NEW DISINFECTION EXTENDED CONTACT CHAMBER, SEE SHEET C-309
23. NEW EFFLUENT LIFT STATION, SHEET C-306
24. NEW METERING MANHOLE, SEE SHEET C-311
25. NEW 15" SDR 35 PVC SEWER LINE, MINIMUM 0.4% SLOPE

SHEET GENERAL NOTES:

1. UTILITIES ILLUSTRATED ON PLAN ARE PRESENTED FOR CONTRACTOR INFORMATION, IF APPLICABLE. SUBSURFACE UTILITY LOCATES HAVE NOT BEEN FIELD VERIFIED, ACTUAL UTILITIES ARE SUBJECT TO CHANGE AND UNMARKED, UNKNOWN UTILITIES SHOULD BE MITIGATED IN THE FIELD PRIOR TO GROUND DISTURBANCES. COORDINATE WITH NAVAJO TRIBAL UTILITY AUTHORITY (NTUA) IN KAYENTA, AZ, AND ARIZONA ONE-CALL UTILITY LOCATE.

wsp
4221 BALLOON PARK RD NE
ALBUQUERQUE, NM 87109
TEL: (505) 821-1801

W. DANIEL BOIVIN
NEW MEXICO
12933
PROFESSIONAL ENGINEER
07/14/2023

FINAL

PROJECT:
KAYENTA WWTP
CFID
POND SYSTEM
FINAL DESIGN

NAVAJO TRIBAL UTILITY AUTHORITY
PO BOX 170
FT. DEFIANCE, AZ 86504

WSP PROJECT No:
2151700011

REVISIONS

NO.	DATE	BY	APPROVED

DESIGNED BY:	WSP – BM
DRAWN BY:	WSP – AO
CHECKED BY:	WSP – BM
APPROVED BY:	WSP – BM
DATE:	07/14/2023

SHEET TITLE:
CFID
POND SYSTEM

SHEET NUMBER: C-101
REV. #
SHEET 4 OF 52 SHEETS

P:\consulting\projects\22\22-517-00011.NTUA-HPP Kayenta WWF\CAD\4.C-101_PROPOSED HPP SYSTEM.dwg

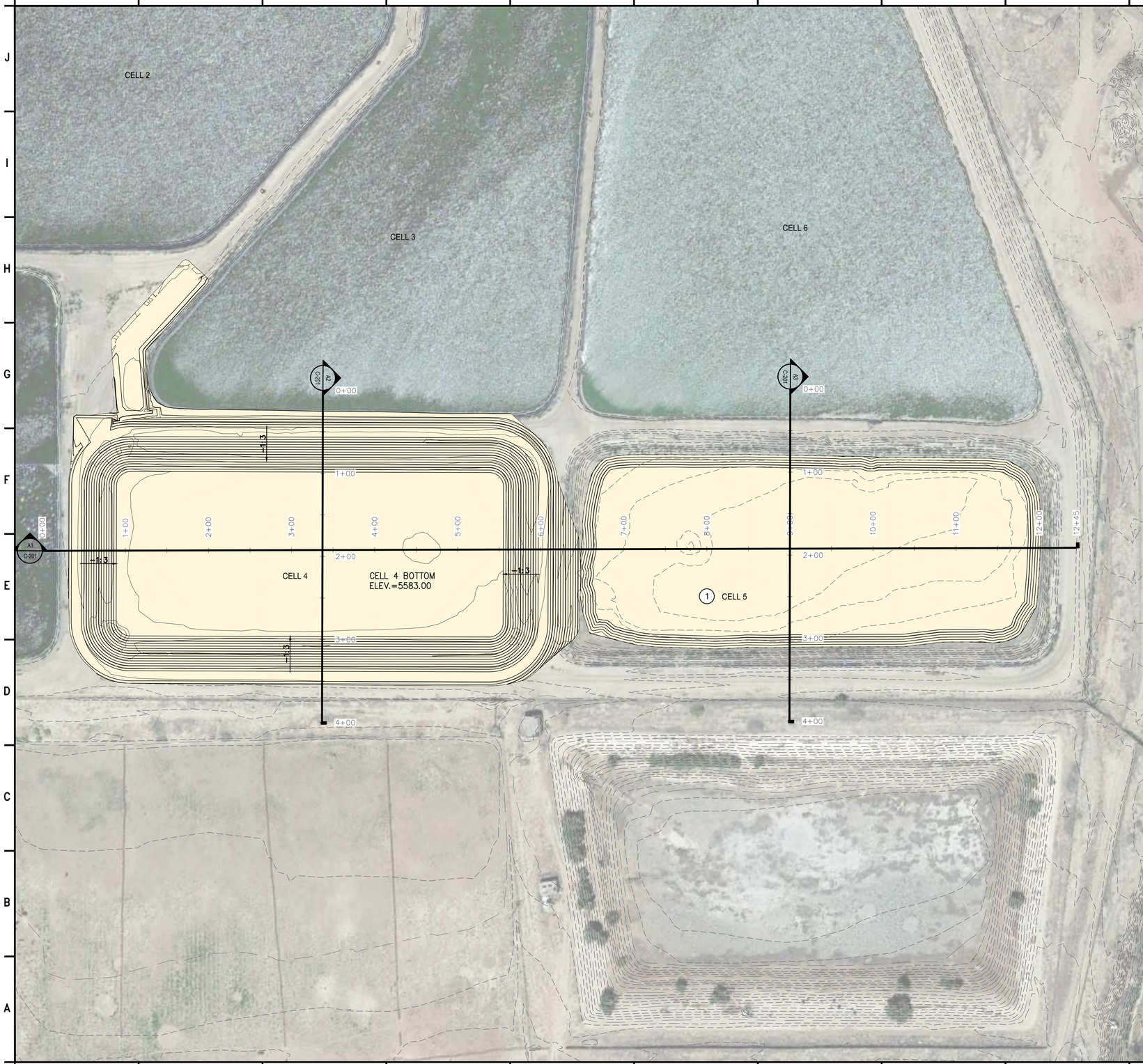

GRADING NOTES:

1. FILL MATERIAL TO COME FROM THIS CELL

SHEET GENERAL NOTES:

1. UTILITIES ILLUSTRATED ON PLAN ARE PRESENTED FOR CONTRACTOR INFORMATION, IF APPLICABLE. SUBSURFACE UTILITY LOCATES HAVE NOT BEEN FIELD VERIFIED, ACTUAL UTILITIES ARE SUBJECT TO CHANGE AND UNMARKED, UNKNOWN UTILITIES SHOULD BE MITIGATED IN THE FIELD PRIOR TO GROUND DISTURBANCES. COORDINATE WITH NAVAJO TRIBAL UTILITY AUTHORITY (NTUA) IN KAYENTA, AZ, AND ARIZONA ONE-CALL UTILITY LOCATE.

LEGEND

EXISTING GROUND TOPOGRAPHIC CONTOUR

PROPOSED GRADING TOPOGRAPHIC CONTOUR

0 120 240 Feet

wsp

4221 BALLOON PARK RD NE
ALBUQUERQUE, NM 87109
TEL: (505) 821-1801

W. DANIEL BOIVIN
NEW MEXICO
12933
PROFESSIONAL ENGINEER

07/14/2023

FINAL

PROJECT:
KAYENTA WWTP
CFID
POND SYSTEM
FINAL DESIGN

NAVAJO TRIBAL UTILITY AUTHORITY
PO BOX 170
FT. DEFIANCE, AZ 86504

WSP PROJECT No:
2151700011

REVISIONS

NO.	DATE	BY	APPROVED

DESIGNED BY:	WSP – BM
DRAWN BY:	WSP – AO
CHECKED BY:	WSP – BM
APPROVED BY:	WSP – BM
DATE:	07/14/2023

SHEET TITLE:

GRADING PLAN

SHEET NUMBER: C-200 REV. #

SHEET 5 OF 52 SHEETS

P:\consulting\projects\22\22-517-00011.NTUA-HPP Kayenta WWF\CAD\5 AND 6.C-200_C-201_PROPOSED GRADING PLAN & PROFILES.dwg

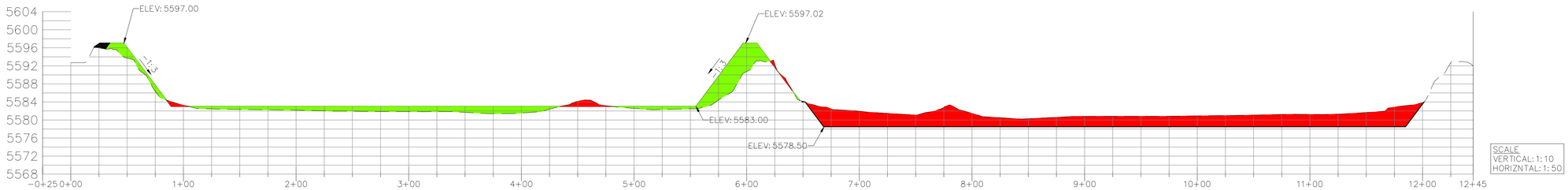

A1 C-200 NW to SE PROFILE

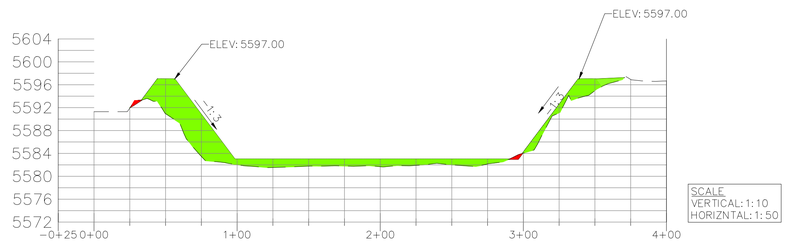

A2 C-200 NE to SW PROFILE

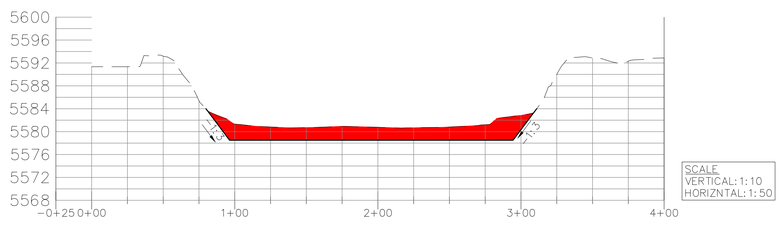

A3 C-200 NE to SW PROFILE 2

CUT/FILL REPORT

Volume Summary

Name	Type	Cut Factor	Fill Factor	2d Area (Sq. Ft.)	Cut (Cu. Yd.)	Fill (Cu. Yd.)	Net (Cu. Yd.)
Cell 5 Grading	full	1.000	1.000	122975.99	12639.07	0.69	12638.38<Cut>
Cell 4 Grading	full	1.000	1.000	200783.35	602.67	13305.06	12702.39<Fill>

Totals

	2d Area (Sq. Ft.)	Cut (Cu. Yd.)	Fill (Cu. Yd.)	Net (Cu. Yd.)
Total	323759.34	13241.74	13305.74	64.01<Fill>

* Value adjusted by cut or fill factor other than 1.0

LEGEND

- EXISTING GROUND TOPOGRAPHIC CONTOUR
- PROPOSED GRADING TOPOGRAPHIC CONTOUR
- PROPOSED FILL
- PROPOSED CUT

NOTES:

1. FOR POND LINER INFORMATION SEE HDPE LINER DETAILS, SHEET C-402.

wsp
4221 BALLOON PARK RD NE
ALBUQUERQUE, NM 87109
TEL: (505) 821-1801

W. DANIEL BOIVIN NEW MEXICO 12933 PROFESSIONAL ENGINEER
07/14/2023

FINAL

PROJECT:
KAYENTA WWTP
CFID
POND SYSTEM
FINAL DESIGN

NAVAJO TRIBAL UTILITY AUTHORITY
PO BOX 170
FT. DEFIANCE, AZ 86504

WSP PROJECT No: 2151700011

REVISIONS

NO.	DATE	BY	APPROVED

DESIGNED BY:	WSP – BM
DRAWN BY:	WSP – AO
CHECKED BY:	WSP – BM
APPROVED BY:	WSP – BM
DATE:	07/14/2023

SHEET TITLE:
GRADING PROFILES

SHEET NUMBER: C-201
REV. #
SHEET 6 OF 52 SHEETS

P:\consulting\projects\22\22-517-00011.NTUA-HPP Kayenta WWF\CAD\5 AND 6.C-200_C-201_PROPOSED GRADING PLAN & PROFILES.dwg

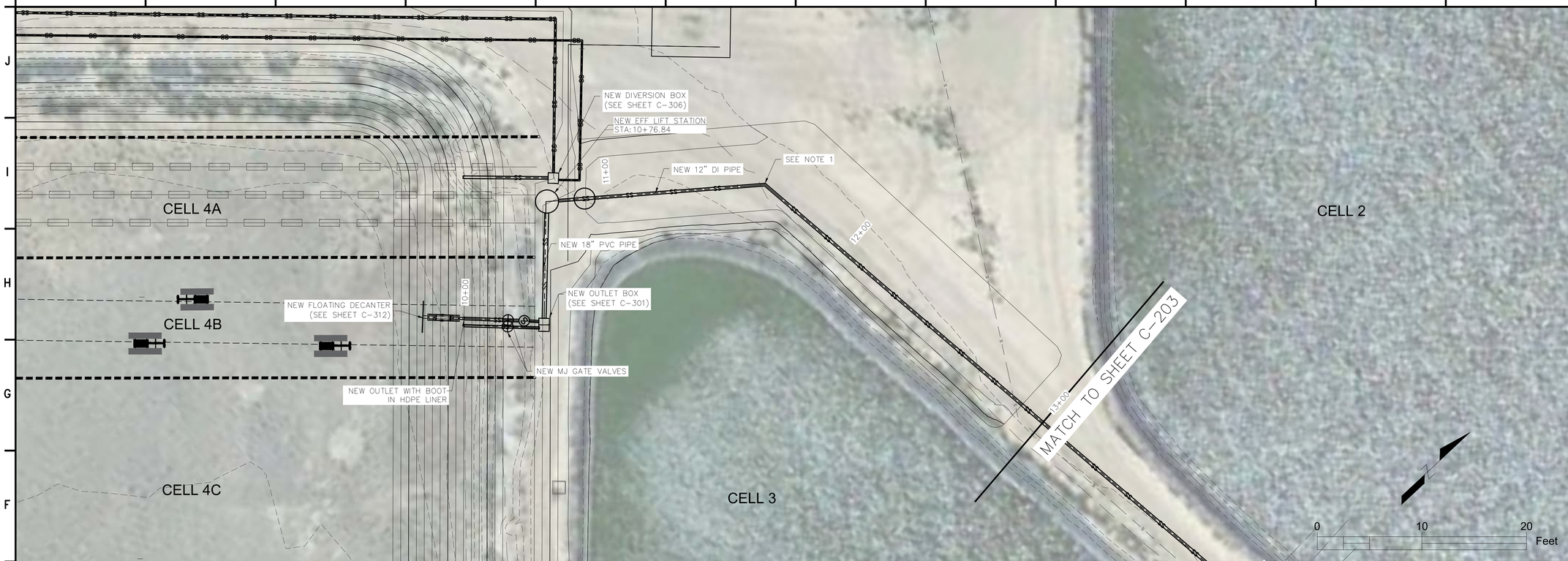

PROPOSED SEWER LINE

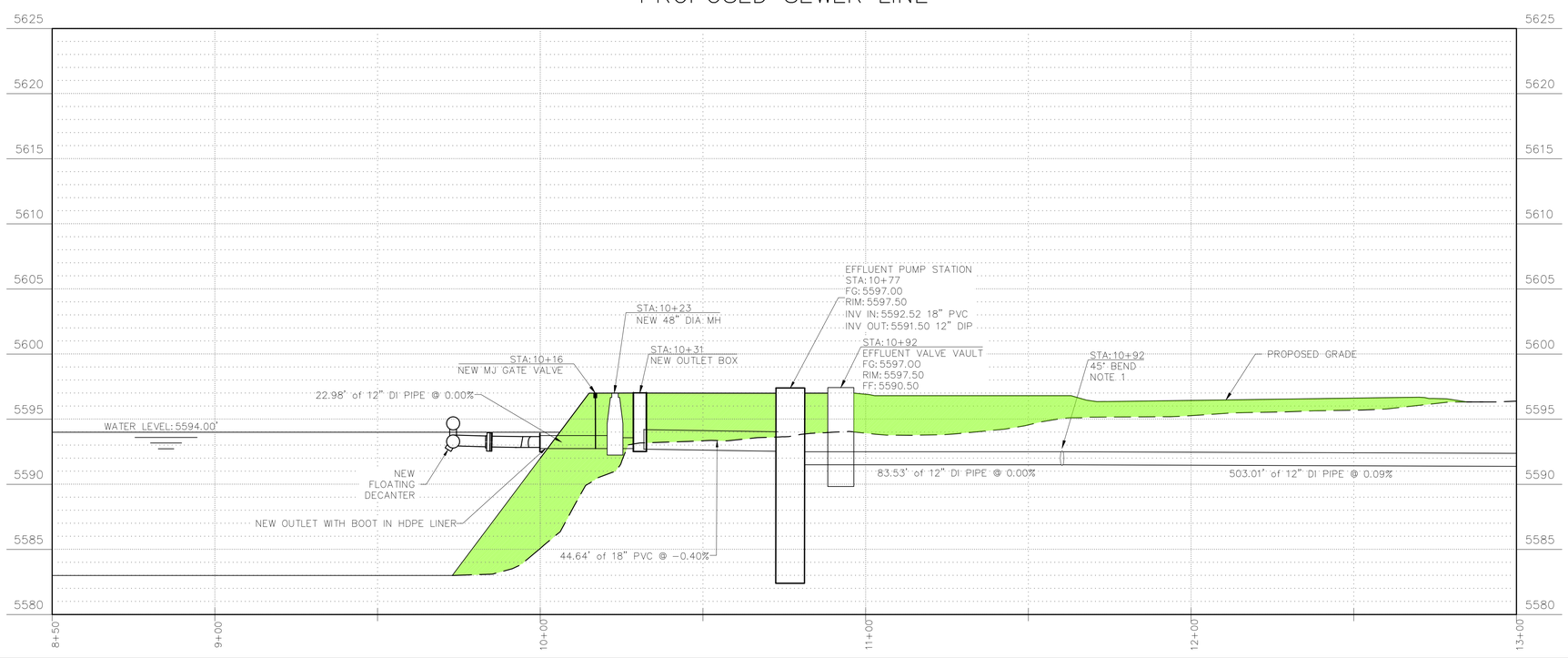

LEGEND

- EXISTING GROUND TOPOGRAPHIC CONTOUR
- PROPOSED GRADING TOPOGRAPHIC CONTOUR
- PROPOSED FILL
- PROPOSED CUT

SHEET GENERAL NOTES:

1. CONTRACTOR SHALL PROVIDE JOINT RESTRAINER PER REQUIRED LENGTH OF PIPE, TYP.

VERTICAL SCALE: 1:5
HORIZONTAL SCALE: 1:20

wsp
4221 BALLOON PARK RD NE
ALBUQUERQUE, NM 87109
TEL: (505) 821-1801

W. DANIEL BOIVIN
NEW MEXICO
12933
PROFESSIONAL ENGINEER
07/14/2023

FINAL

PROJECT:
KAYENTA WWTP
CFID
POND SYSTEM
FINAL DESIGN

NAVAJO TRIBAL UTILITY AUTHORITY
PO BOX 170
FT. DEFIANCE, AZ 86504

WSP PROJECT No:
2151700011

REVISIONS			
NO.	DATE	BY	APPROVED

DESIGNED BY:	WSP – BM
DRAWN BY:	WSP – AO
CHECKED BY:	WSP – BM
APPROVED BY:	WSP – BM
DATE:	07/14/2023

SHEET TITLE:
SEWER LINE
PLAN AND PROFILE

SHEET NUMBER:	REV. #
C-202	

SHEET 7 OF 52 SHEETS

P:\consulting\projects\22\22-517-00011.NTUA-HPP Kayenta WWF\CAD\7 & 8. C-202 & C-210_SEWER LINE PLAN AND PROFILE.dwg

PROPOSED SEWER LINE

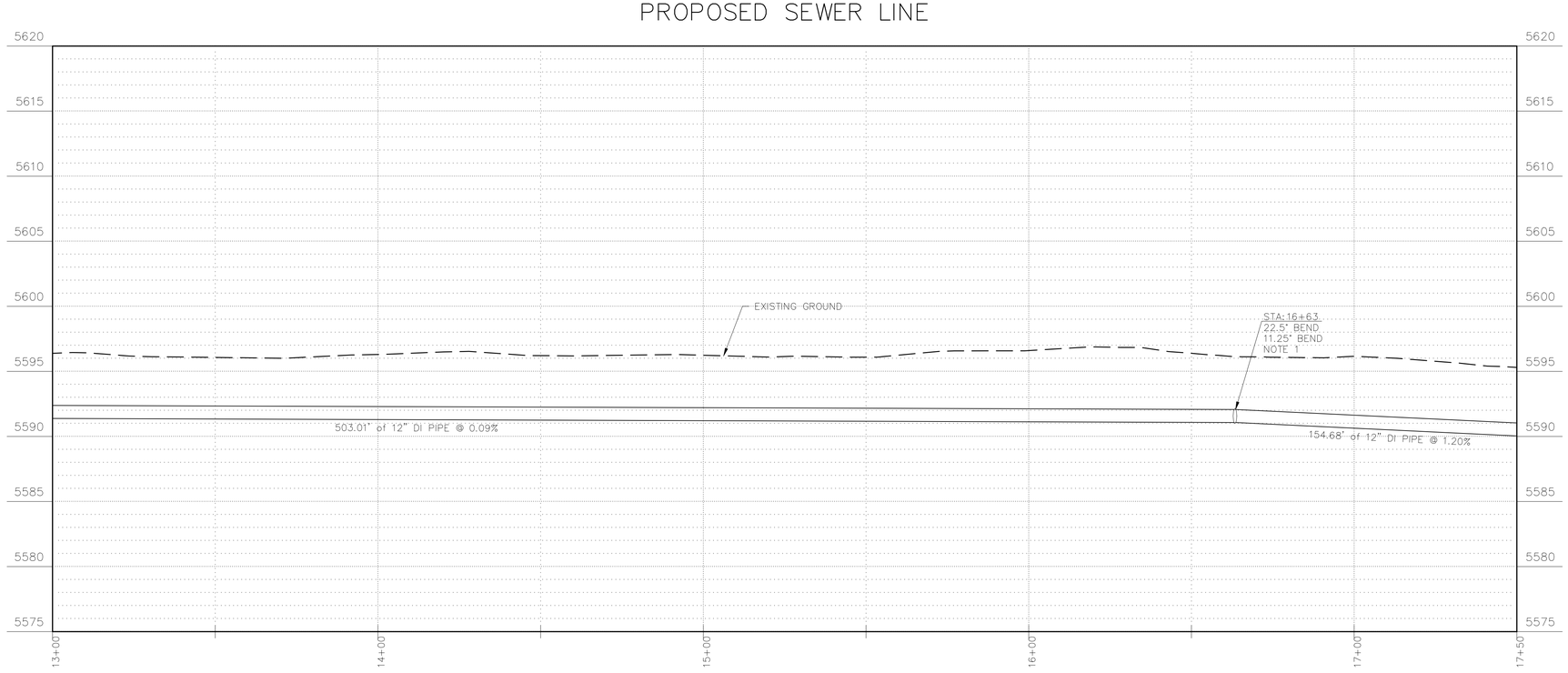

VERTICAL SCALE: 1:5
HORIZONTAL SCALE: 1:20

LEGEND

- EXISTING GROUND TOPOGRAPHIC CONTOUR
- PROPOSED GRADING TOPOGRAPHIC CONTOUR
- PROPOSED FILL
- PROPOSED CUT

SHEET GENERAL NOTES:

1. CONTRACTOR SHALL PROVIDE JOINT RESTRAINER PER REQUIRED LENGTH OF PIPE, TYP.

wsp
4221 BALLOON PARK RD NE
ALBUQUERQUE, NM 87109
TEL: (505) 821-1801

W. DANIEL BOIVIN
NEW MEXICO
12933
PROFESSIONAL ENGINEER
07/14/2023

FINAL

PROJECT:
KAYENTA WWTP
CFID
POND SYSTEM
FINAL DESIGN

NAVAJO TRIBAL UTILITY AUTHORITY
PO BOX 170
FT. DEFIANCE, AZ 86504

WSP PROJECT No:
2151700011

REVISIONS

NO.	DATE	BY	APPROVED

DESIGNED BY:	WSP – BM
DRAWN BY:	WSP – AO
CHECKED BY:	WSP – BM
APPROVED BY:	WSP – BM
DATE:	07/14/2023

SHEET TITLE:
SEWER LINE PLAN AND PROFILE

SHEET NUMBER: C-203
REV. #

SHEET 8 OF 52 SHEETS

P:\consulting\projects\22\22-517-00011.NTUA-HPP Kayenta WWF\CAD\7 & 8. C-202 & C-210_SEWER LINE PLAN AND PROFILE.dwg

PROPOSED SEWER LINE

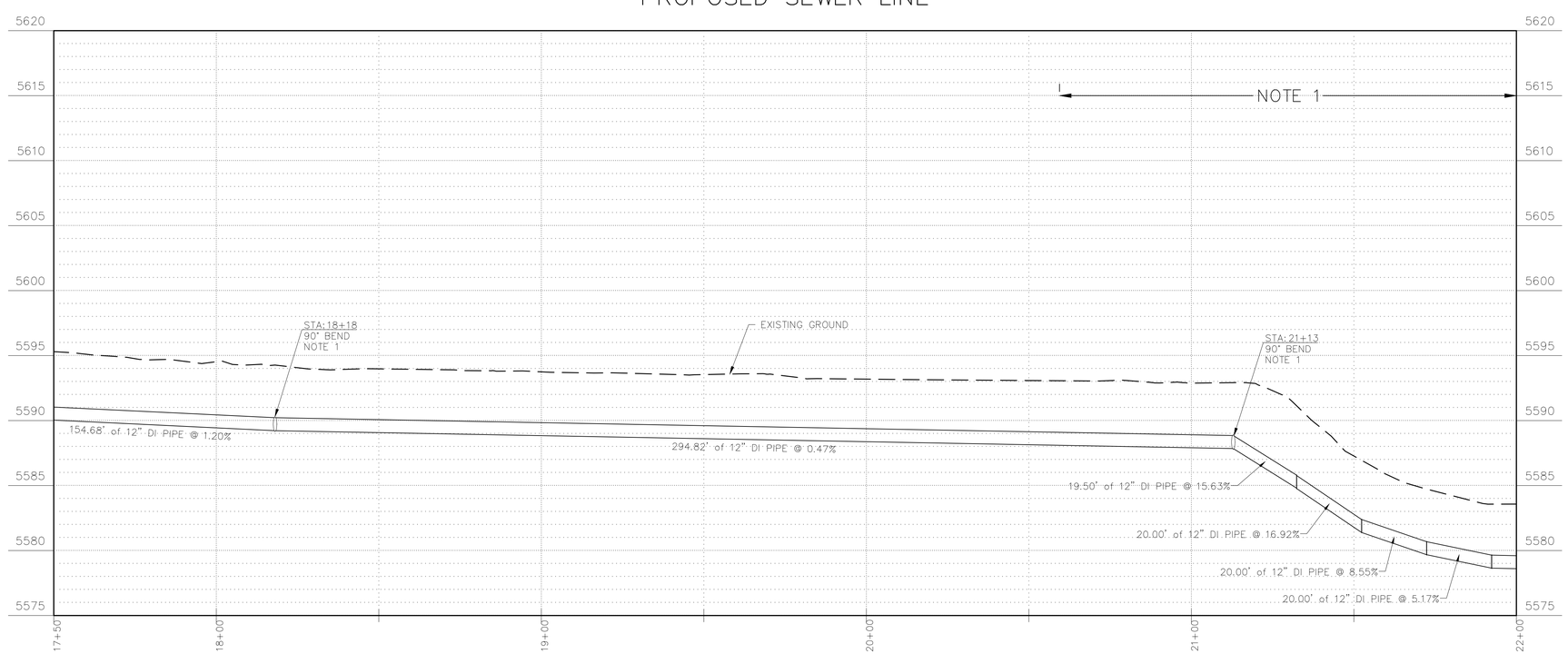

VERTICAL SCALE: 1:5
HORIZONTAL SCALE: 1:20

LEGEND

- EXISTING GROUND TOPOGRAPHIC CONTOUR
- PROPOSED GRADING TOPOGRAPHIC CONTOUR
- PROPOSED FILL
- PROPOSED CUT

SHEET GENERAL NOTES:

1. CONTRACTOR SHALL PROVIDE JOINT RESTRAINER PER REQUIRED LENGTH OF PIPE, TYP.

wsp
4221 BALLOON PARK RD NE
ALBUQUERQUE, NM 87109
TEL: (505) 821-1801

W. DANIEL BOIVIN
NEW MEXICO
12933
PROFESSIONAL ENGINEER
07/14/2023

FINAL

PROJECT:
KAYENTA WWTP
CFID
POND SYSTEM
FINAL DESIGN

NAVAJO TRIBAL UTILITY AUTHORITY
PO BOX 170
FT. DEFIANCE, AZ 86504

WSP PROJECT No:
2151700011

REVISIONS

NO.	DATE	BY	APPROVED

DESIGNED BY:	WSP – BM
DRAWN BY:	WSP – AO
CHECKED BY:	WSP – BM
APPROVED BY:	WSP – BM
DATE:	07/14/2023

SHEET TITLE:
SEWER LINE PLAN AND PROFILE

SHEET NUMBER: C-204
REV. #

SHEET 9 OF 52 SHEETS

P:\consulting\projects\22\22-517-00011.NTUA-HPP Kayenta WWF\CAD\7 & 8. C-202 & C-210_SEWER LINE PLAN AND PROFILE.dwg

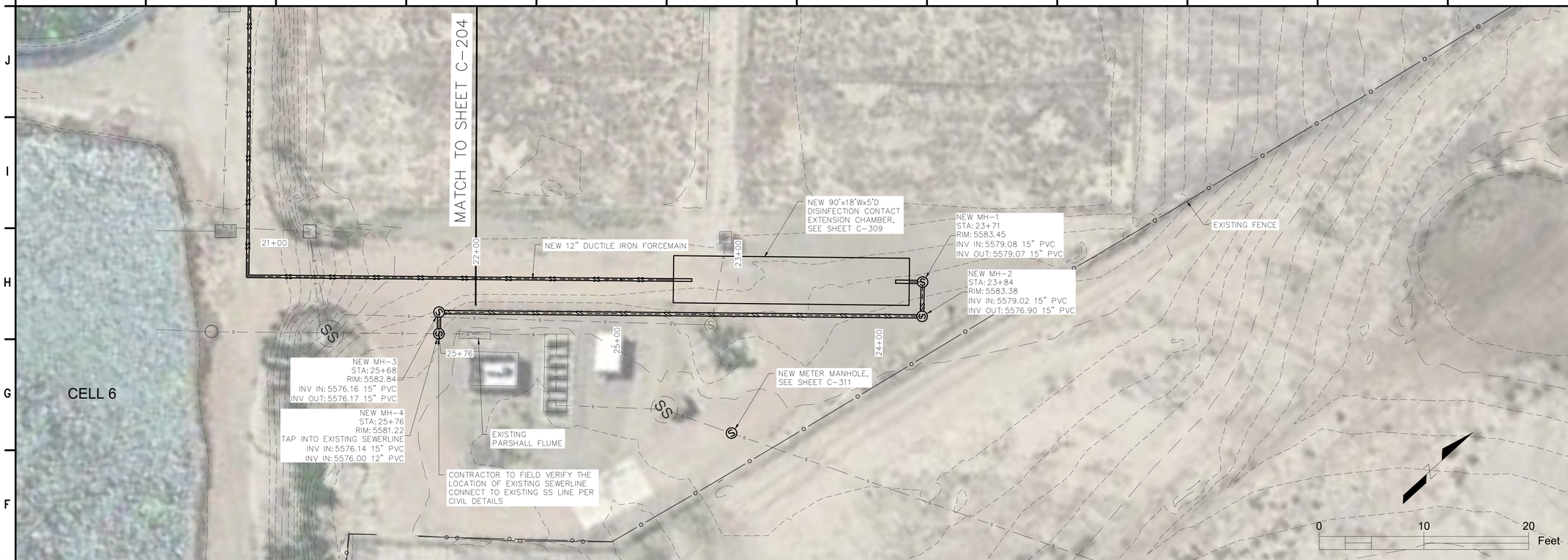

PROPOSED SEWER LINE

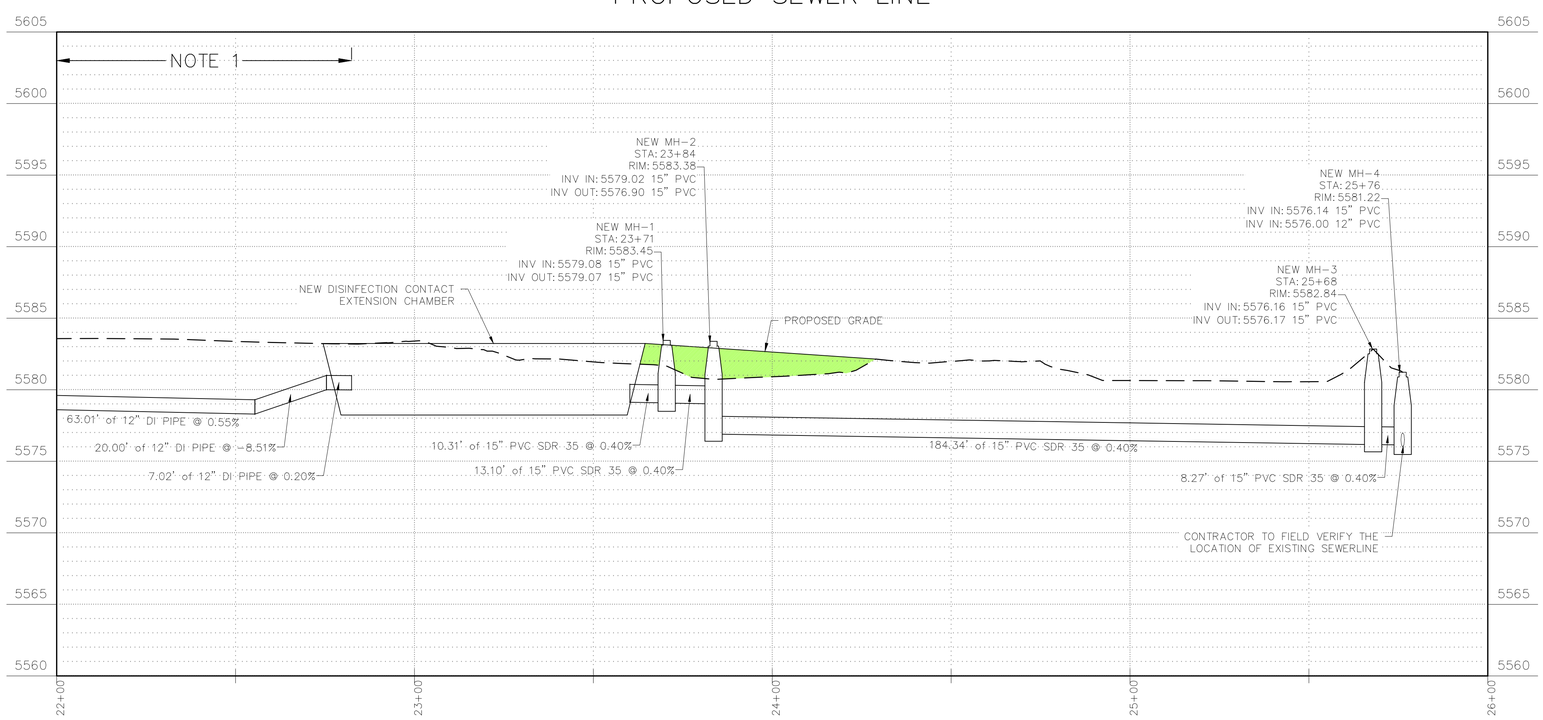

LEGEND

- EXISTING GROUND TOPOGRAPHIC CONTOUR
- PROPOSED GRADING TOPOGRAPHIC CONTOUR
- PROPOSED FILL
- PROPOSED CUT

SHEET GENERAL NOTES:

1. CONTRACTOR SHALL PROVIDE JOINT RESTRAINER PER REQUIRED LENGTH OF PIPE, TYP.

VERTICAL SCALE: 1:5
HORIZONTAL SCALE: 1:20

wsp
4221 BALLOON PARK RD NE
ALBUQUERQUE, NM 87109
TEL: (505) 821-1801

W. DANIEL BOIVIN
NEW MEXICO
12933
PROFESSIONAL ENGINEER
07/14/2023

FINAL

PROJECT:
KAYENTA WWTP
CFID
POND SYSTEM
FINAL DESIGN

NAVAJO TRIBAL UTILITY AUTHORITY
PO BOX 170
FT. DEFIANCE, AZ 86504

WSP PROJECT No:
2151700011

REVISIONS			
NO.	DATE	BY	APPROVED

DESIGNED BY:	WSP – BM
DRAWN BY:	WSP – AO
CHECKED BY:	WSP – BM
APPROVED BY:	WSP – BM
DATE:	07/14/2023

SHEET TITLE:
SEWER LINE PLAN AND PROFILE

SHEET NUMBER:	REV. #
C-205	

SHEET 10 OF 52 SHEETS

P:\consulting\projects\22\22-517-00011.NTUA-HPP Kayenta WWF\CAD\7 & 8. C-202 & C-210_SEWER LINE PLAN AND PROFILE.dwg

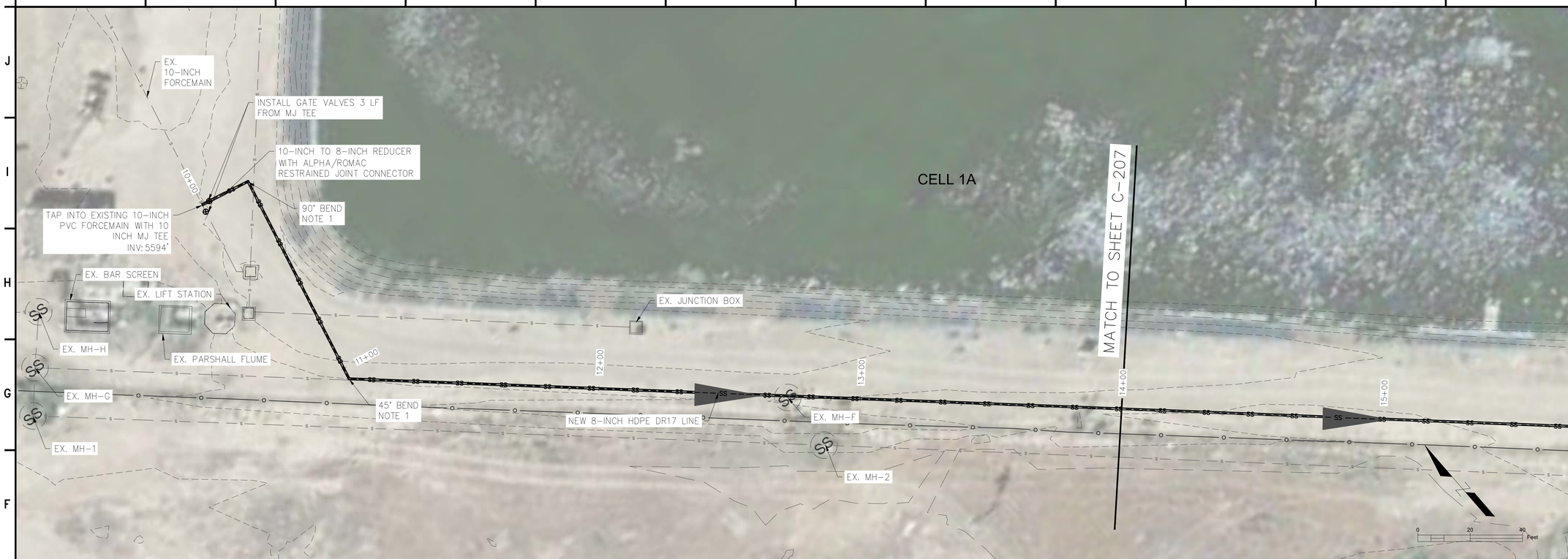

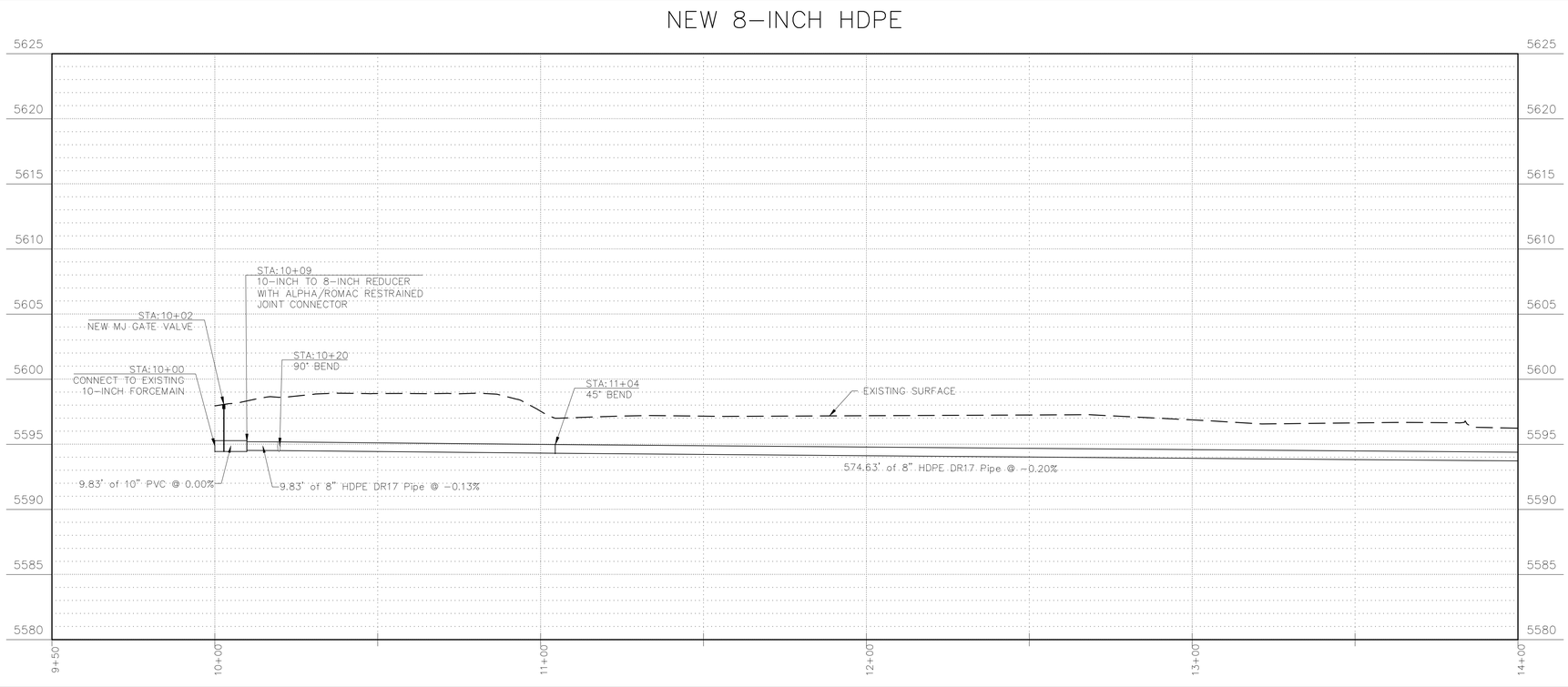

VERTICAL SCALE: 1:5
HORIZONTAL SCALE: 1:20

LEGEND

- EXISTING GROUND TOPOGRAPHIC CONTOUR
- PROPOSED GRADING TOPOGRAPHIC CONTOUR
- PROPOSED FILL
- PROPOSED CUT

SHEET GENERAL NOTES:

1. CONTRACTOR SHALL PROVIDE JOINT RESTRAINER PER REQUIRED LENGTH OF PIPE, TYP.
2. CONTRACTOR TO REGRADE GROUND ALONG NEW SEWER LINE ALIGNMENT TO A MINIMUM OF 4' BURY DEPTH FROM TOP OF NEW PIPE

wsp
4221 BALLOON PARK RD NE
ALBUQUERQUE, NM 87109
TEL: (505) 821-1801

W. DANIEL BOIVIN
NEW MEXICO
12933
PROFESSIONAL ENGINEER
07/14/2023

FINAL

PROJECT:
KAYENTA WWTP
CFID
POND SYSTEM
FINAL DESIGN

NAVAJO TRIBAL UTILITY AUTHORITY
PO BOX 170
FT. DEFIANCE, AZ 86504

WSP PROJECT No:
2151700011

REVISIONS			
NO.	DATE	BY	APPROVED

DESIGNED BY:	WSP – BM
DRAWN BY:	WSP – AO
CHECKED BY:	WSP – BM
APPROVED BY:	WSP – BM
DATE:	07/14/2023

SHEET TITLE:
SEWER LINE PLAN AND PROFILE

SHEET NUMBER: C-206
REV. #
SHEET 11 OF 52 SHEETS

P:\consulting\projects\22\22-517-00011.NTUA-HPP Kayenta WWF\CAD\7 & 8. C-202 & C-210_SEWER LINE PLAN AND PROFILE.dwg

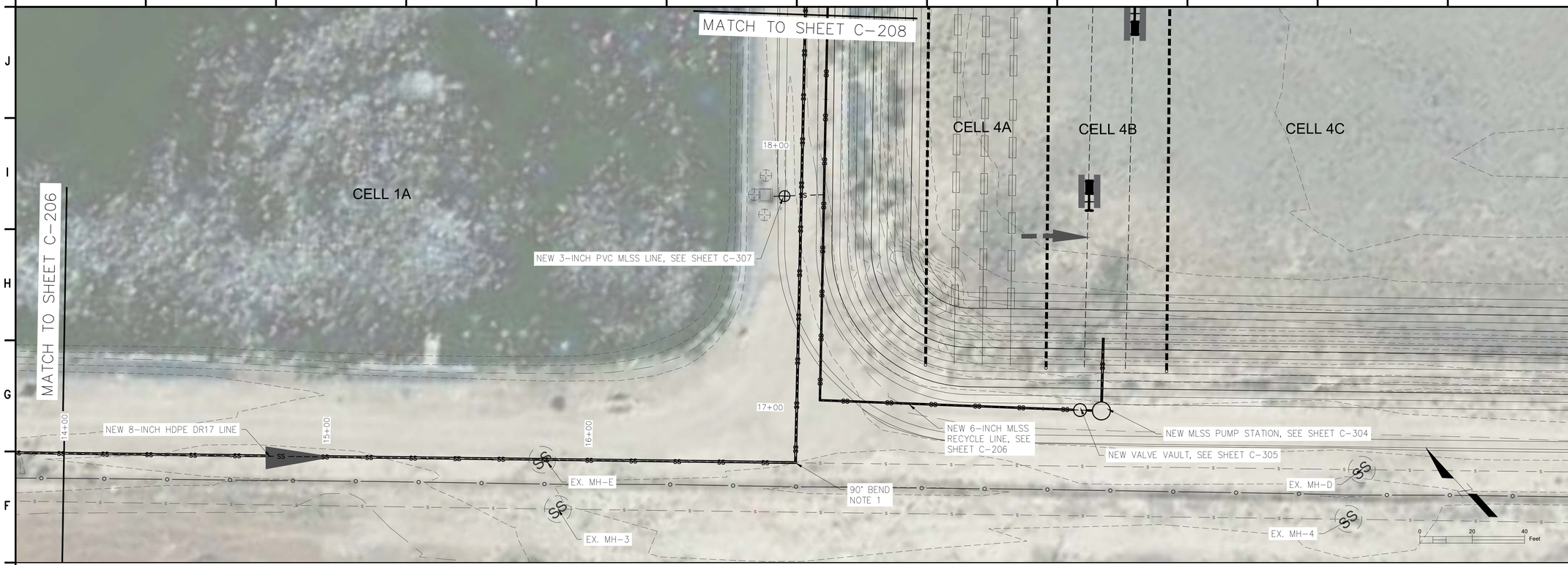

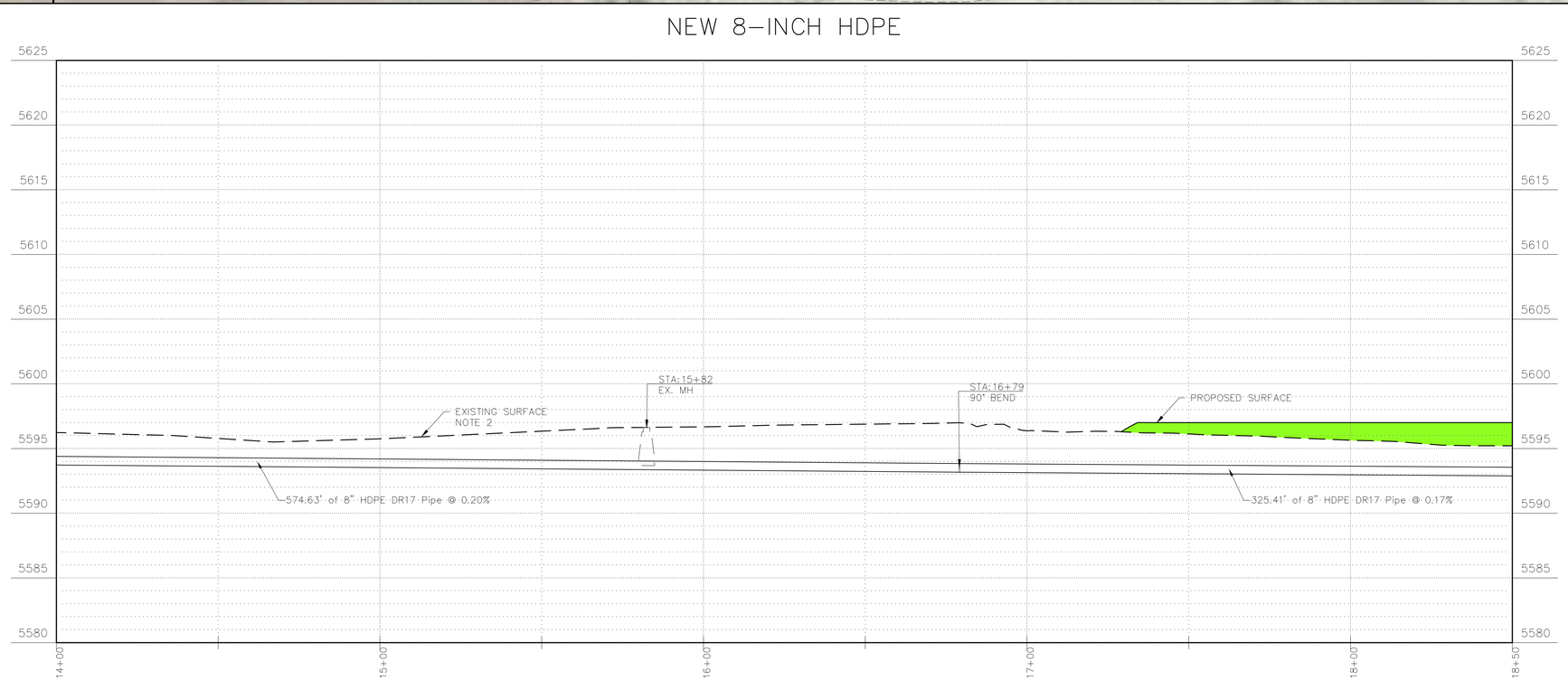

VERTICAL SCALE: 1:5
HORIZONTAL SCALE: 1:20

LEGEND

- EXISTING GROUND TOPOGRAPHIC CONTOUR
- PROPOSED GRADING TOPOGRAPHIC CONTOUR
- PROPOSED FILL
- PROPOSED CUT

SHEET GENERAL NOTES:

1. CONTRACTOR SHALL PROVIDE JOINT RESTRAINER PER REQUIRED LENGTH OF PIPE, TYP.
2. CONTRACTOR TO REGRADE GROUND ALONG NEW SEWER LINE ALIGNMENT TO A MINIMUM OF 4' BURY DEPTH FROM TOP OF NEW PIPE

wsp
4221 BALLOON PARK RD NE
ALBUQUERQUE, NM 87109
TEL: (505) 821-1801

W. DANIEL BOIVIN
NEW MEXICO
12933
PROFESSIONAL ENGINEER
07/14/2023

FINAL

PROJECT:
KAYENTA WWTP
CFID
POND SYSTEM
FINAL DESIGN

NAVAJO TRIBAL UTILITY AUTHORITY
PO BOX 170
FT. DEFIANCE, AZ 86504

WSP PROJECT No:
2151700011

REVISIONS

NO.	DATE	BY	APPROVED

DESIGNED BY:	WSP – BM
DRAWN BY:	WSP – AO
CHECKED BY:	WSP – BM
APPROVED BY:	WSP – BM
DATE:	07/14/2023

SHEET TITLE:
SEWER LINE PLAN AND PROFILE

SHEET NUMBER: C-207
REV. #
SHEET 12 OF 52 SHEETS

P:\consulting\projects\22\22-517-00011.NTUA-HPP Kayenta WWF\CAD\7 & 8. C-202 & C-210_SEWER LINE PLAN AND PROFILE.dwg

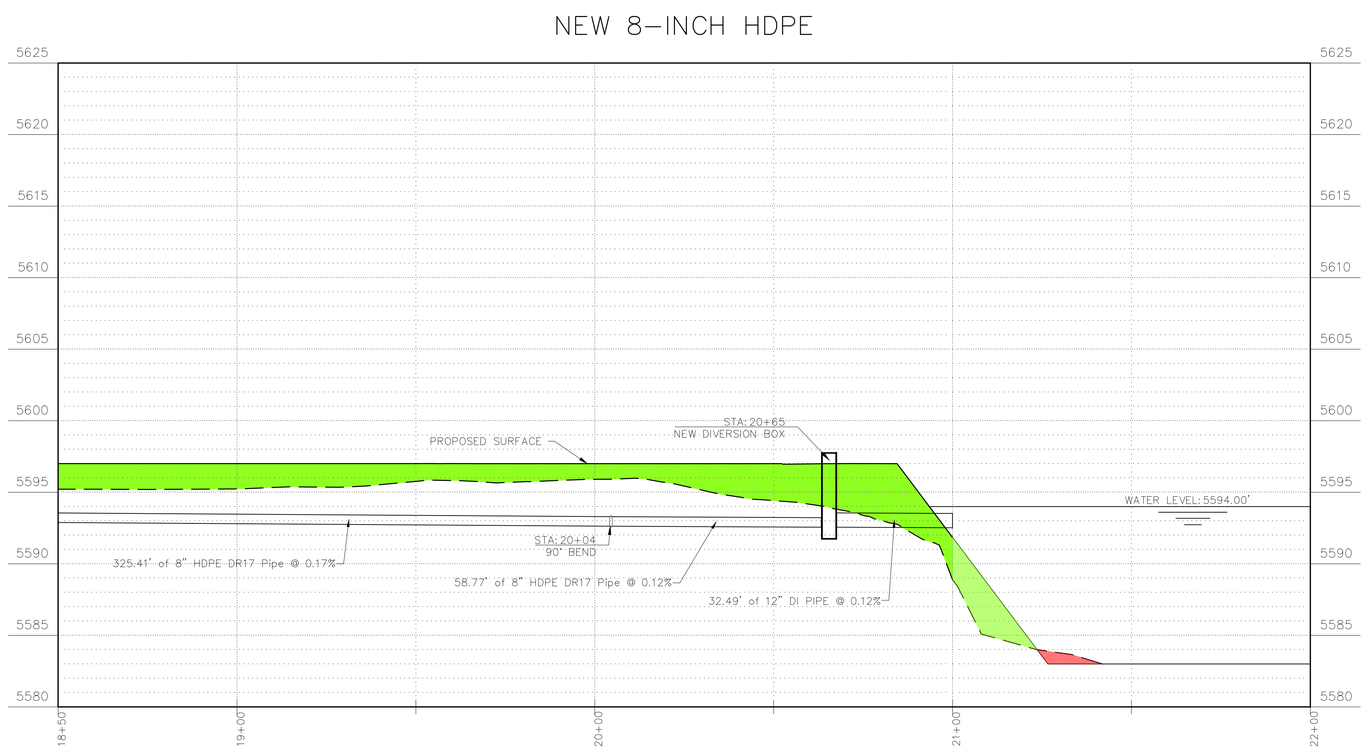

SHEET GENERAL NOTES:

1. CONTRACTOR SHALL PROVIDE JOINT RESTRAINER PER REQUIRED LENGTH OF PIPE, TYP.

LEGEND

- EXISTING GROUND TOPOGRAPHIC CONTOUR
- PROPOSED GRADING TOPOGRAPHIC CONTOUR
- PROPOSED FILL
- PROPOSED CUT

VERTICAL SCALE: 1:5
HORIZONTAL SCALE: 1:20

wsp
4221 BALLOON PARK RD NE
ALBUQUERQUE, NM 87109
TEL: (505) 821-1801

W. DANIEL BOIVIN
NEW MEXICO
12933
PROFESSIONAL ENGINEER
07/14/2023

FINAL

PROJECT:
KAYENTA WWTP
CFID
POND SYSTEM
FINAL DESIGN

NAVAJO TRIBAL UTILITY AUTHORITY
PO BOX 170
FT. DEFIANCE, AZ 86504

WSP PROJECT No:
2151700011

REVISIONS

NO.	DATE	BY	APPROVED

DESIGNED BY:	WSP – BM
DRAWN BY:	WSP – AO
CHECKED BY:	WSP – BM
APPROVED BY:	WSP – BM
DATE:	07/14/2023

SHEET TITLE:
SEWER LINE
PLAN AND PROFILE

SHEET NUMBER: C-208
REV. #
SHEET 13 OF 52 SHEETS

P:\consulting\projects\22\22-517-00011.NTUA-HPP Kayenta WWF\CAD\7 & 8. C-202 & C-210_SEWER LINE PLAN AND PROFILE.dwg

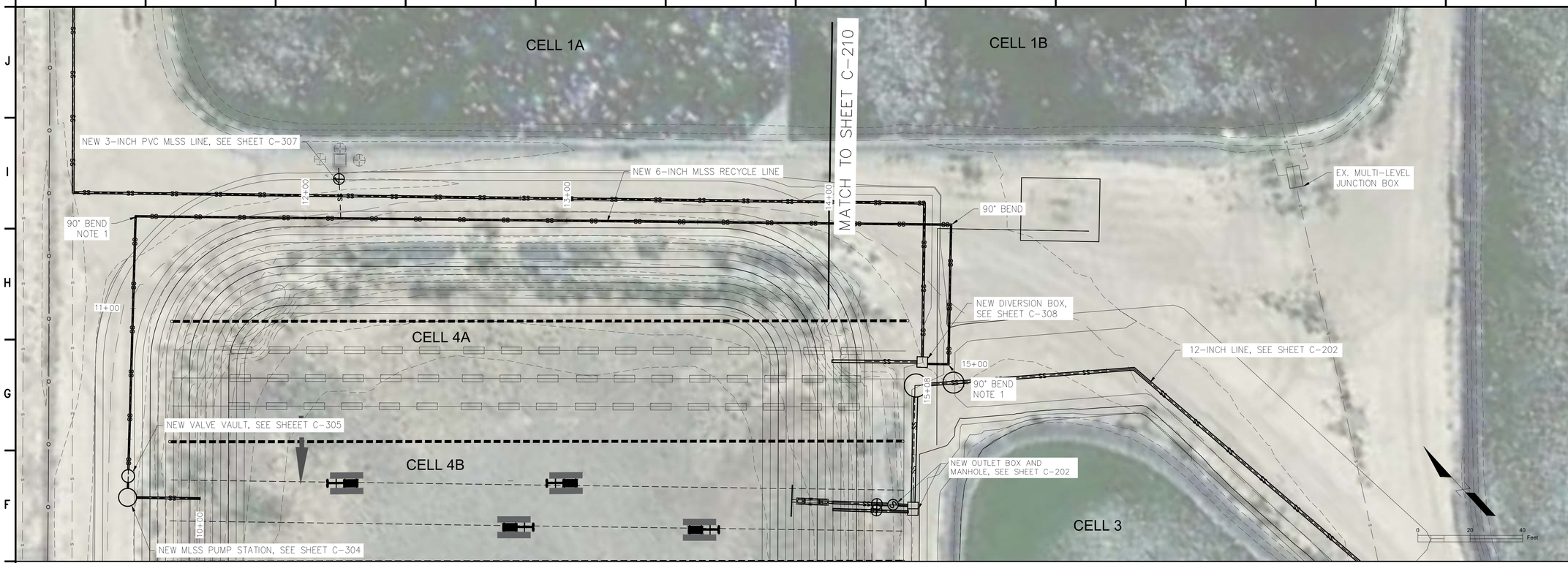

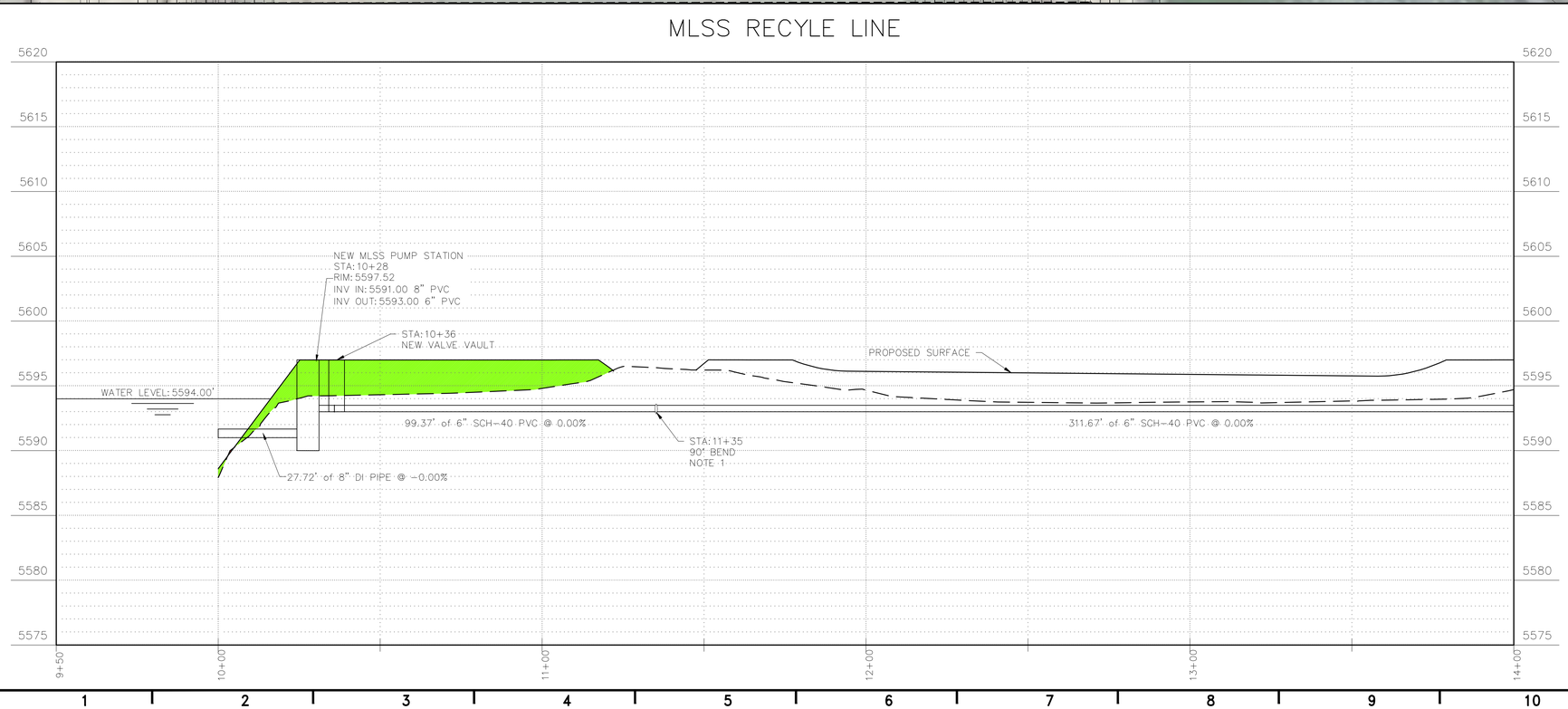

LEGEND

- EXISTING GROUND TOPOGRAPHIC CONTOUR
- PROPOSED GRADING TOPOGRAPHIC CONTOUR
- PROPOSED FILL
- PROPOSED CUT

SHEET GENERAL NOTES:

1. CONTRACTOR SHALL PROVIDE JOINT RESTRAINER PER REQUIRED LENGTH OF PIPE, TYP.

VERTICAL SCALE: 1:5
HORIZONTAL SCALE: 1:20

wsp
4221 BALLOON PARK RD NE
ALBUQUERQUE, NM 87109
TEL: (505) 821-1801

W. DANIEL BOIVIN
NEW MEXICO
12933
PROFESSIONAL ENGINEER
07/14/2023

FINAL

PROJECT:
KAYENTA WWTP
CFID
POND SYSTEM
FINAL DESIGN

NAVAJO TRIBAL UTILITY AUTHORITY
PO BOX 170
FT. DEFIANCE, AZ 86504

WSP PROJECT No:
2151700011

REVISIONS			
NO.	DATE	BY	APPROVED

DESIGNED BY:	WSP – BM
DRAWN BY:	WSP – AO
CHECKED BY:	WSP – BM
APPROVED BY:	WSP – BM
DATE:	07/14/2023

SHEET TITLE:
SEWER LINE PLAN AND PROFILE

SHEET NUMBER: C-209
REV. #

SHEET 14 OF 52 SHEETS

P:\consulting\projects\22\22-517-00011.NTUA-HPP Kayenta WWF\CAD\7 & 8. C-202 & C-210_SEWER LINE PLAN AND PROFILE.dwg

MLSS RECYLE LINE

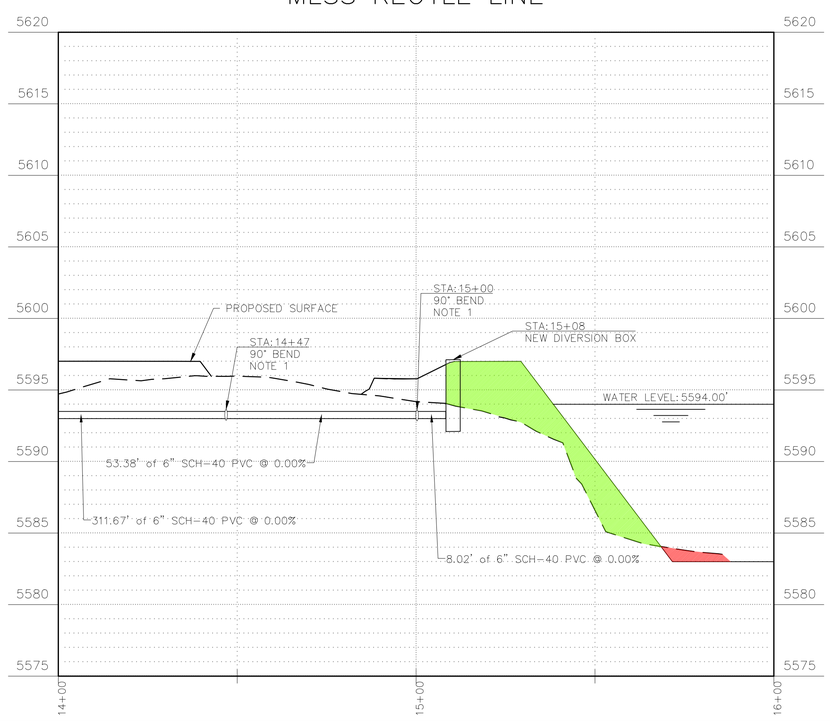

SHEET GENERAL NOTES:

1. CONTRACTOR SHALL PROVIDE JOINT RESTRAINER PER REQUIRED LENGTH OF PIPE, TYP.

LEGEND

- EXISTING GROUND TOPOGRAPHIC CONTOUR
- PROPOSED GRADING TOPOGRAPHIC CONTOUR
- PROPOSED FILL
- PROPOSED CUT

VERTICAL SCALE: 1:5
HORIZONTAL SCALE: 1:20

wsp
4221 BALLOON PARK RD NE
ALBUQUERQUE, NM 87109
TEL: (505) 821-1801

W. DANIEL BOIVIN
NEW MEXICO
12933
PROFESSIONAL ENGINEER
07/14/2023

FINAL

PROJECT:
KAYENTA WWTP
CFID
POND SYSTEM
FINAL DESIGN

NAVAJO TRIBAL UTILITY AUTHORITY
PO BOX 170
FT. DEFIANCE, AZ 86504

WSP PROJECT No:
2151700011

REVISIONS

NO.	DATE	BY	APPROVED

DESIGNED BY:	WSP – BM
DRAWN BY:	WSP – AO
CHECKED BY:	WSP – BM
APPROVED BY:	WSP – BM
DATE:	07/14/2023

SHEET TITLE:
SEWER LINE
PLAN AND PROFILE

SHEET NUMBER: C-210
REV. #
SHEET 15 OF 52 SHEETS

P:\consulting\projects\22\22-517-00011.NTUA-HPP Kayenta WWF\CAD\7 & 8. C-202 & C-210_SEWER LINE PLAN AND PROFILE.dwg

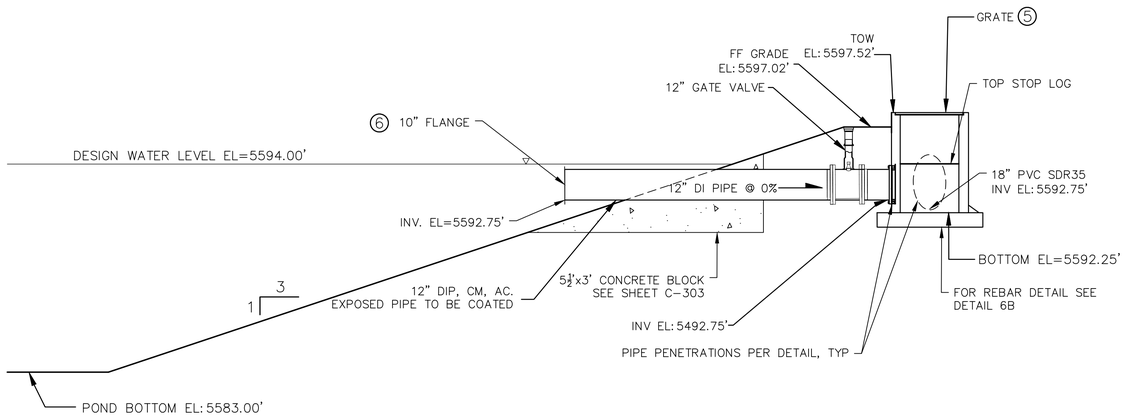

6 DISCHARGE STRUCTURE PROFILE
NOT TO SCALE

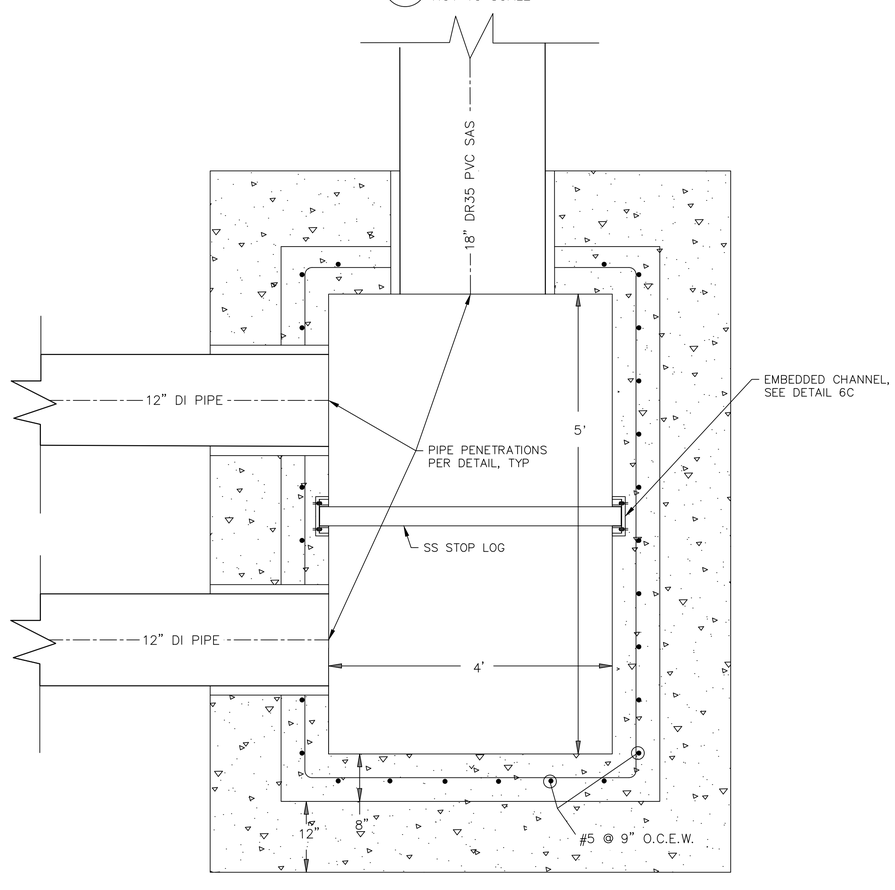

6A DISCHARGE STRUCTURE STRUCTURAL DETAILS (PLAN)
NOT TO SCALE

6D STOP LOG
NOT TO SCALE

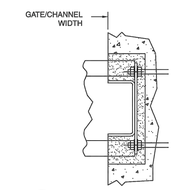

6C EMBEDDED CHANNEL
NOT TO SCALE

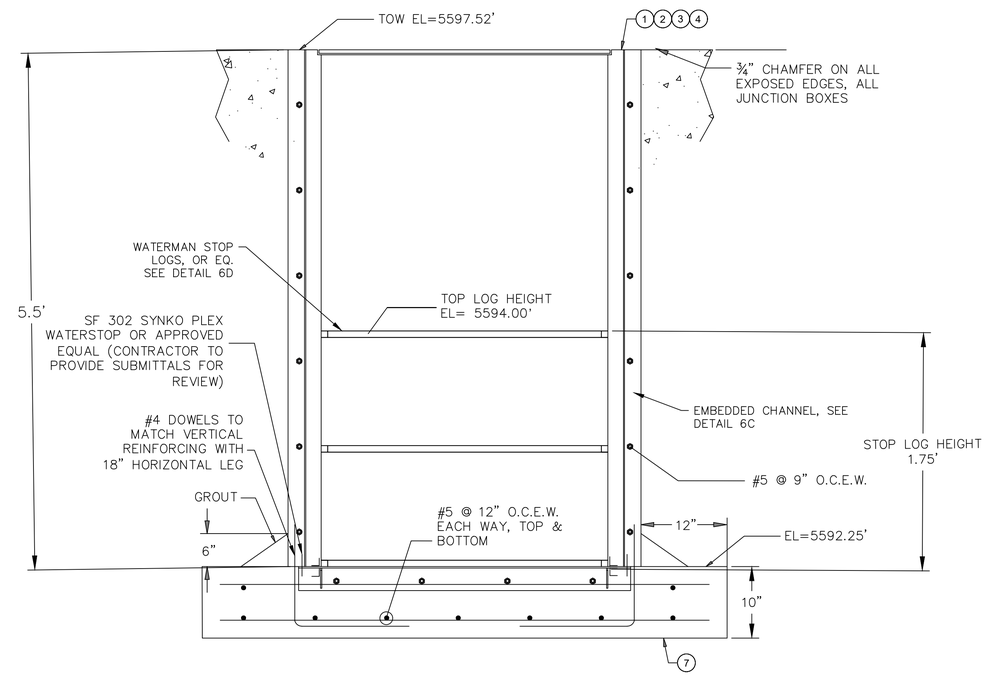

6B DISCHARGE STRUCTURE STRUCTURAL DETAILS (PROFILE)
NOT TO SCALE

BUILD NOTES

1. STRUCTURAL CONCRETE: FURNISH AND INSTALL REINFORCED PORTLAND CEMENT CONCRETE PER STRUCTURAL SHEETS, COMPLETE IN PLACE.
2. SUBGRADE PREP: PREPARE SUBGRADE FOR STRUCTURES INCLUDES EXCAVATION (3FT BELOW BOTTOM FOUNDATION ELEV.) AND COMPACT TO 95% ASTM D698 PER GEOTECHNICAL REPORT
3. STRUCTURAL FILL: FILL CONSTRUCTION FOR STRUCTURES INCLUDING PLACEMENT AND COMPACTION OF SUITABLE ENGINEERED FILL MATERIAL AND REINFORCED GEOGRID.
4. EXCAVATE AND SPOIL UNSUITABLE MATERIAL.
5. FURNISH AND INSTALL GRATE, SEE SHEET C-310 FOR GRATE DETAILS.
6. FLOATING DECANTER TO BE INSTALLED, SEE SHEET C-310.
7. 24" COMPACTED FILL AT 95%.

wsp
4221 BALLOON PARK RD NE
ALBUQUERQUE, NM 87109
TEL: (505) 821-1801

W. DANIEL BOIVIN
NEW MEXICO
12933
PROFESSIONAL ENGINEER
07/14/2023

FINAL

PROJECT:
KAYENTA WWTP
CFID
POND SYSTEM
FINAL DESIGN

NAVAJO TRIBAL UTILITY AUTHORITY
PO BOX 170
FT. DEFIANCE, AZ 86504

WSP PROJECT No:
2151700011

REVISIONS			
NO.	DATE	BY	APPROVED

DESIGNED BY:	WSP – BM
DRAWN BY:	WSP – AO
CHECKED BY:	WSP – BM
APPROVED BY:	WSP – BM
DATE:	07/14/2023

SHEET TITLE:
DISCHARGE STRUCTURE PLAN, PROFILE AND DETAILS

SHEET NUMBER: C-301
REV. #
SHEET 16 OF 52 SHEETS

P:\consulting\projects\22\22-517-00011.NTUA-HPP Kayenta WWF\CAD\C-301_DISCHARGE STRUCTURE PLAN, PROFILE, AND DETAILS.dwg

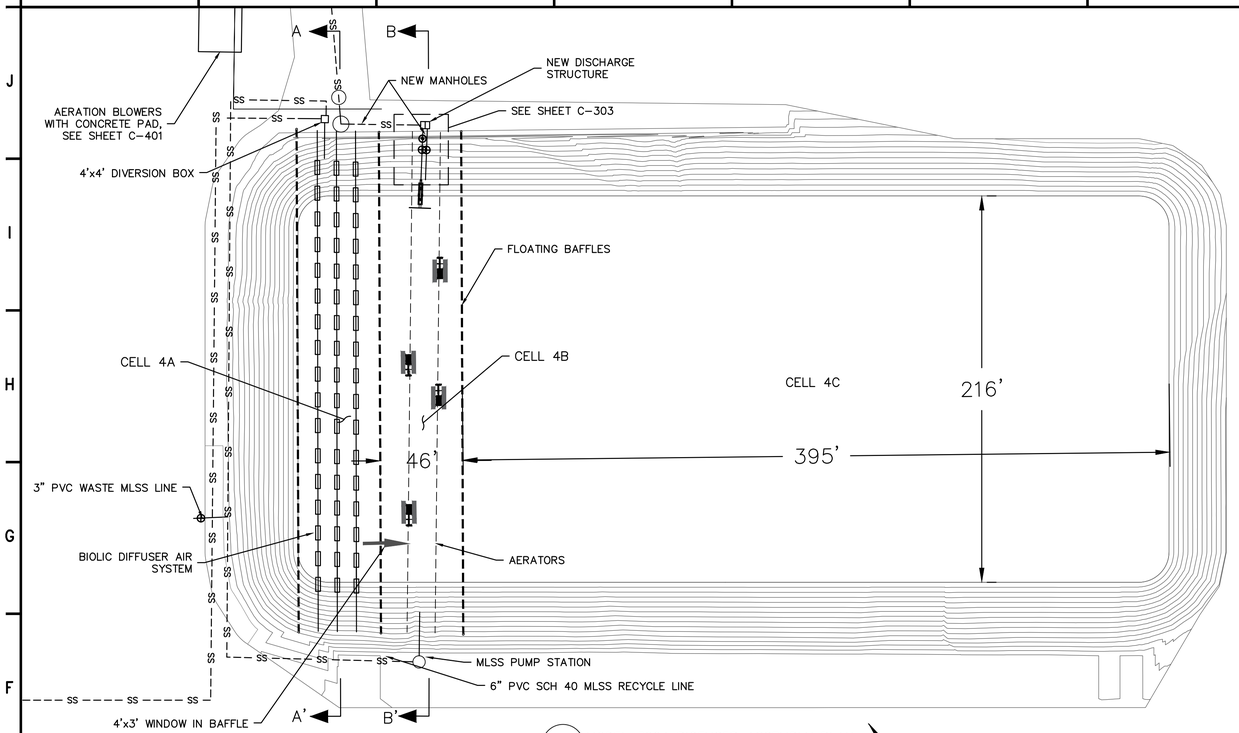

1 MODEL 3204 BIOFUSER ASSEMBLY PLAN
1"=40'

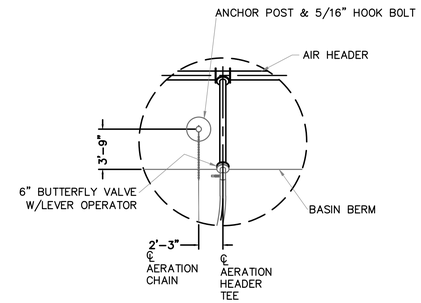

DETAIL "C" (PLAN)
TYP

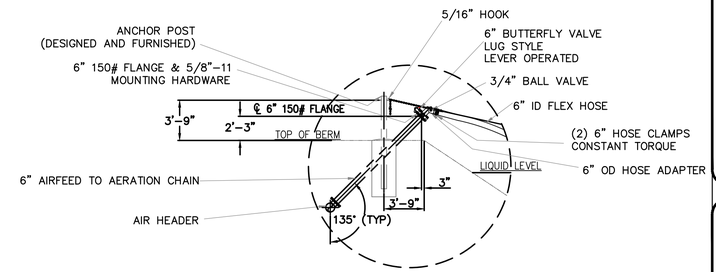

DETAIL "C"
(TYP)

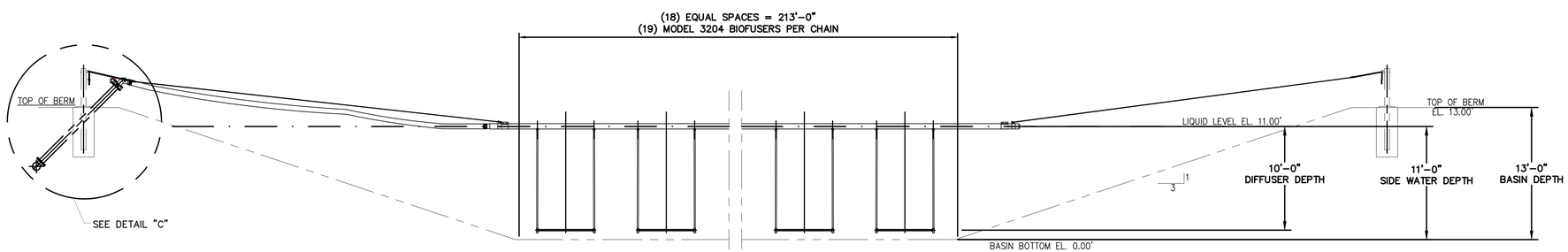

SECTION A-A'
NTS

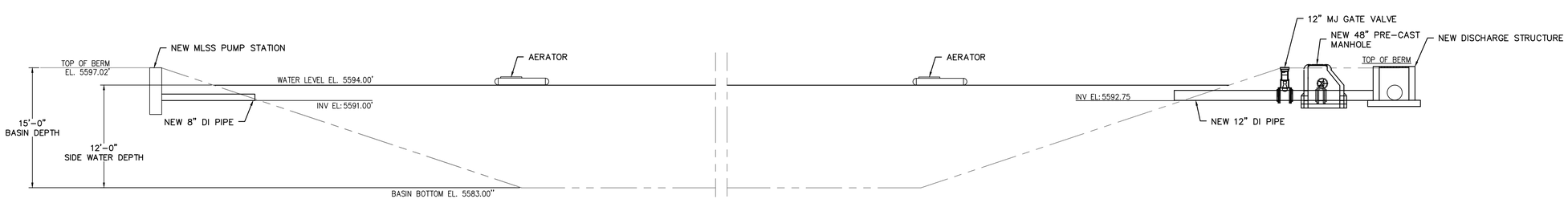

SECTION B-B'
NTS

wsp
4221 BALLOON PARK RD NE
ALBUQUERQUE, NM 87109
TEL: (505) 821-1801

W. DANIEL BOIVIN
NEW MEXICO
12933
PROFESSIONAL ENGINEER
07/14/2023

FINAL

PROJECT:
KAYENTA WWTP CFID POND SYSTEM FINAL DESIGN

NAVAJO TRIBAL UTILITY AUTHORITY
PO BOX 170
FT. DEFIANCE, AZ 86504

WSP PROJECT No:
2151700011

REVISIONS

NO.	DATE	BY	APPROVED

DESIGNED BY:	WSP – BM
DRAWN BY:	WSP – AO
CHECKED BY:	WSP – BM
APPROVED BY:	WSP – BM
DATE:	07/14/2023

SHEET TITLE:
DIFUSER DETAILS

SHEET NUMBER:	REV. #
C-302	

SHEET 17 OF 52 SHEETS

P:\consulting\projects\22\22-517-00011.NTUA-HPP Kayenta WWF\CAD\C-302_DIFUSER DETAILS.dwg

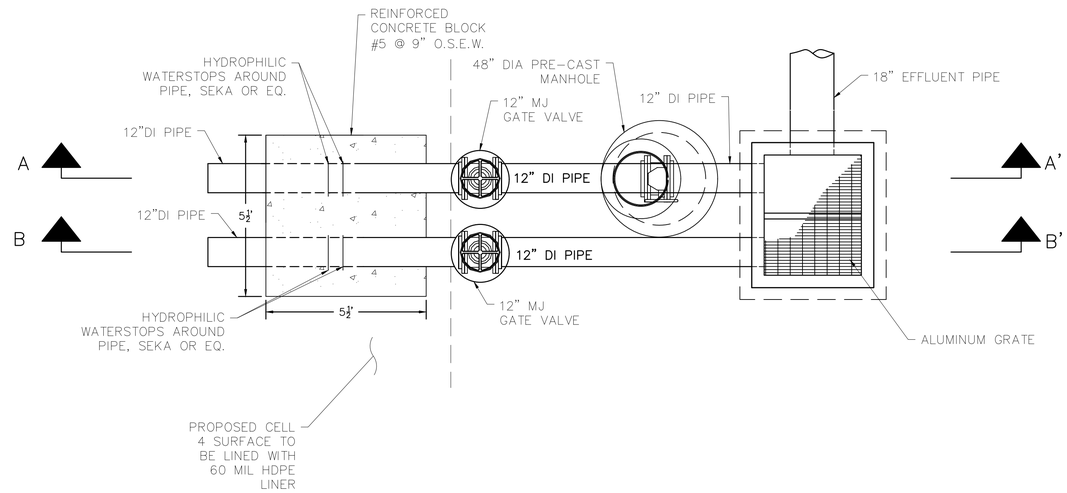

1 DISCHARGE STRUCTURE ASSEMBLY PLAN
NOT TO SCALE

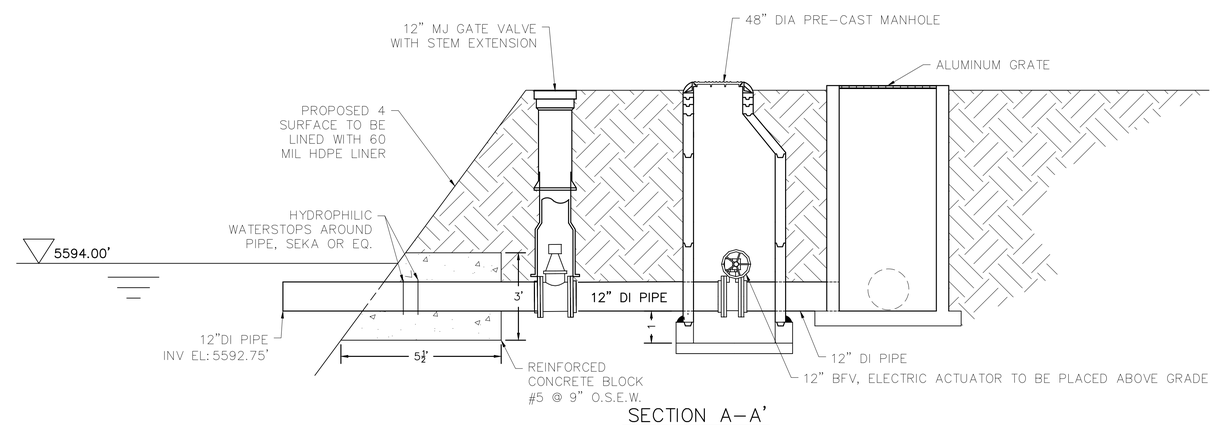

SECTION A–A'
NOT TO SCALE

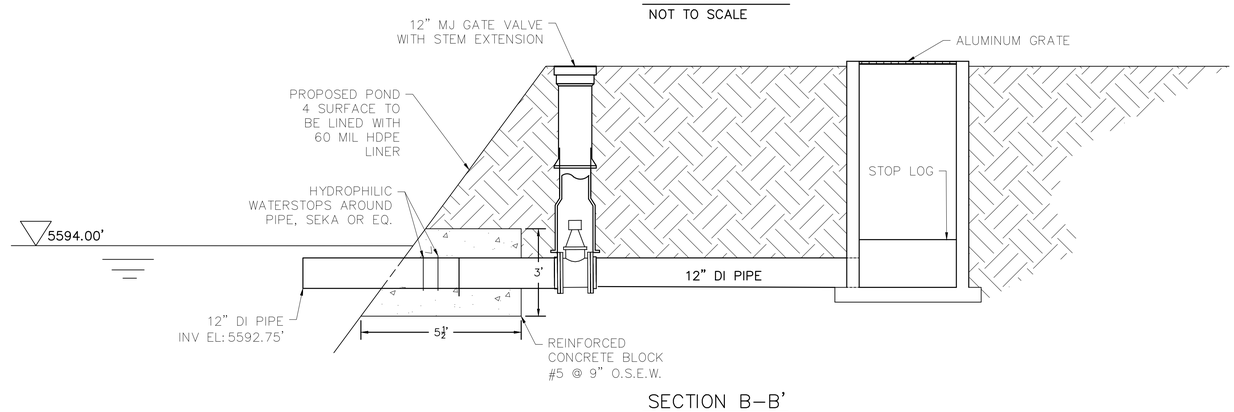

SECTION B–B'
NOT TO SCALE

wsp
4221 BALLOON PARK RD NE
ALBUQUERQUE, NM 87109
TEL: (505) 821-1801

W. DANIEL BOIVIN
NEW MEXICO
12933
PROFESSIONAL ENGINEER
07/14/2023

FINAL

PROJECT:
KAYENTA WWTP CFID POND SYSTEM FINAL DESIGN

NAVAJO TRIBAL UTILITY AUTHORITY
PO BOX 170
FT. DEFIANCE, AZ 86504

WSP PROJECT No: 2151700011

REVISIONS

NO.	DATE	BY	APPROVED

DESIGNED BY:	WSP – BM
DRAWN BY:	WSP – AO
CHECKED BY:	WSP – BM
APPROVED BY:	WSP – BM
DATE:	07/14/2023

SHEET TITLE:
DISCHARGE STRUCTURE DETAILS

SHEET NUMBER: C-303
REV. #
SHEET 18 OF 52 SHEETS

P:\consulting\projects\22\22-517-00011.NTUA-HPP Kayenta WWF\CAD\C-303_DISCHARGE STRUCTURE DETAILS.dwg

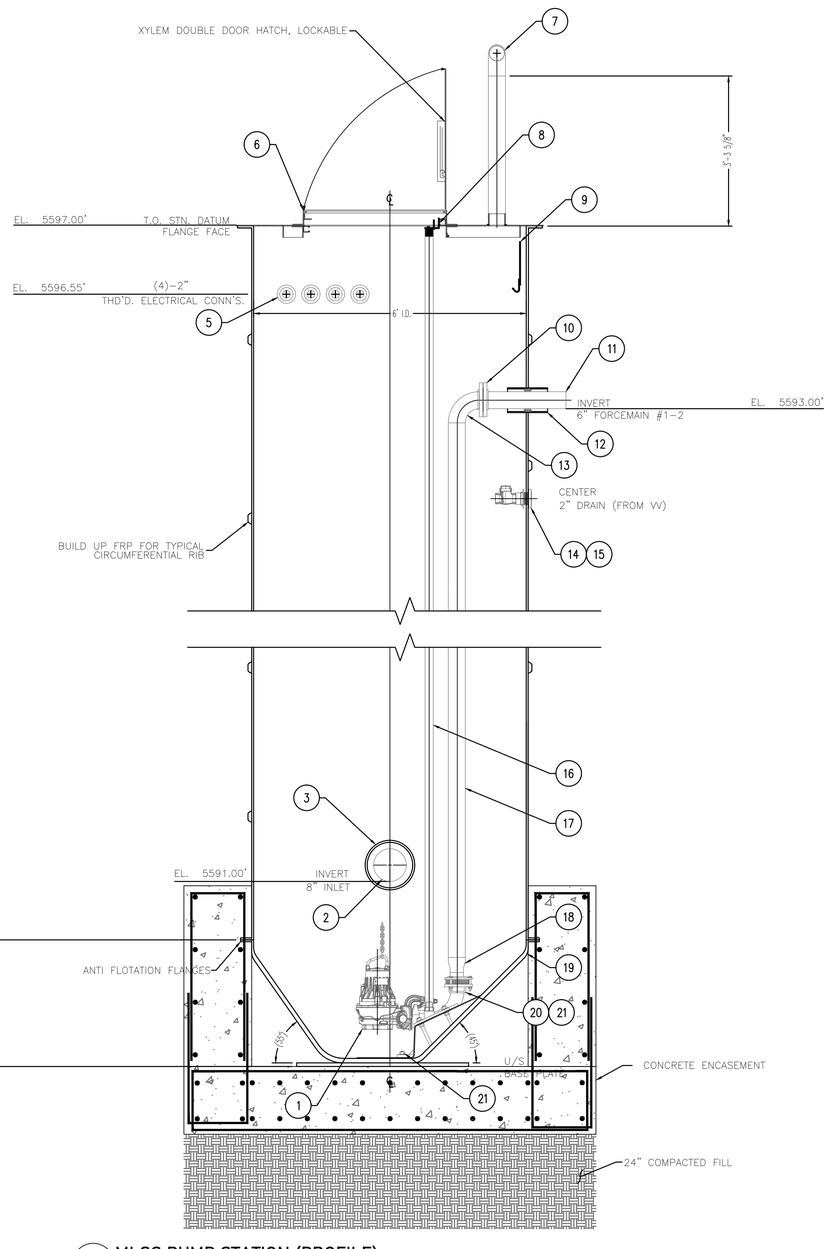

1 MLSS PUMP STATION (PROFILE)
NOT TO SCALE

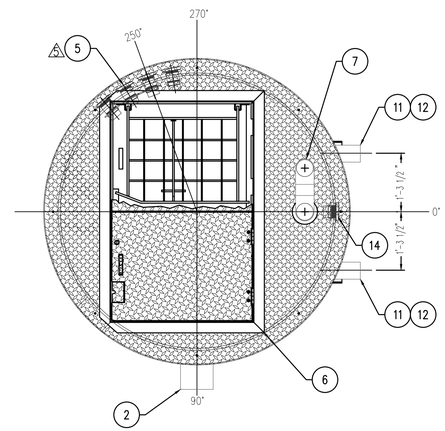

1A MLSS PUMP STATION (PLAN)
NOT TO SCALE

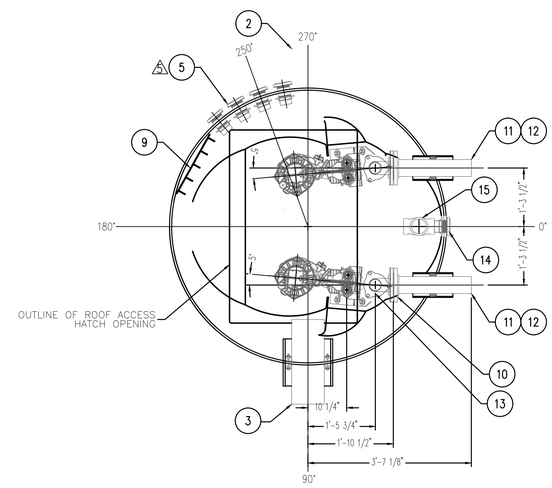

1B PUMPS LAYOUT
NOT TO SCALE

BILL OF MATERIALS

ITEM	DESCRIPTION	QTY.
1	FLYGT PUMPS NP-3085 SH, DN80 [3"]	2
2	8" INLET (SDR 35 HDPE PIPE)	1
3	10" I.D. FRP SLEEVE c/w WRAP-IT LINK WL-475, 12 LINK	2
4	*ITEM REMOVED*	–
5	2" THREADED PVC ELECTRICAL CONNECTION	4
6	FBC-AOSH 33.75x51" ALUMINUM EJ SAFE HATCH, PEDESTRIAN RATED, DOUBLE DOOR, COVER STAY, SS HARDWARE, SLAM LOCK, HANDLE, c/w (1)-4" VENT CONN., (MODEL FBC-33.75x51AOSH-72)	1
7	4" GOOSENECK VENT, SCH.10, 316 SS c/w 180° RETURN BEND & SST BIRDSCREEN	1
8	2" UPPER GUIDE BAR SUPPORT BRACKET, 316 SS	2
9	CABLE HANGER, 316 SS	1
10	6"-150# RF FLANGE, 316 SS	4
11	6" FORCEMAIN #1 & #2, SCH.10 316 SS	2
12	8" I.D. FRP SLEEVE c/w WRAP-IT LINK WL-300, 10 LINK	2
13	6" SR 90 ELBOW, SCH.10 316 SS	2
14	2" BULKHEAD FITTING, FRP (DRAIN FROM VALVE VAULT)	1
15	2" CHECK VALVE (DRAIN FROM VALVE VAULT), SST	1
16	2" GUIDE BARS, SCH.40, 316 SS	4
17	6 RISERS, SCH.10, 316 SS	2
18	6x3" CONCENTRIC REDUCER, SCH.10, 316 SS	2
19	FLYGT T.O.P STYLE BASE c/w FRP REINFORCED BOTTOM & INTEGRAL ANTI-FLOTATION FLANGE	1
20	TOP DISCHARGE ELBOW – 619 99 10-R DN80 [3"]	1
21	TOP DISCHARGE ELBOW – 620 00 10-L DN80 [3"]	1
22	3/4" PUMP BASE BOLTS, 316 SS	8

FABRICATION DESIGN STANDARDS

1. XYLEM SPECIFICATION GE-1008-04, REVISION MAY 2002
2. AMEC 4S-10.01 MANUFACTURE AND INSTALLATION FOR FRP STRUCTURES
3. AMEC 4S-10.02 FRP PRESSURE PIPE, FITTINGS AND FLANGES

GENERAL NOTES

1. WINDING ANGLE – 75°
2. TANK WALL – VARIES WITH ELEVATION
3. LINER – C-GLASS VEIL AND (2)-1 1/2 oz. MATT
4. RESIN – ISOPHTHALIC
5. INTERIOR FINISH – WHITE ISOPHTHALIC NPG GELCOAT
6. EXTERIOR (ABOVE GRADE) TO HAVE DARK GREEN GELCOAT
7. DIMENSIONS ARE IN MILLIMETERS U.N.O.
8. APPROX. SHIPPING WEIGHT: 3,200 lbs

INSTALLATION PROCEDURES

1. USE THE LIFTING LUGS PROVIDED FOR VERTICAL HANDLING.
2. USE SLINGS AROUND THE MAIN TANK FOR HORIZONTAL HANDLING.
3. ENSURE UNIT IS STANDING VERTICAL ON CONCRETE PAD.
4. BOLT UNIT FIRMLY AND SQUARELY IN PLACE, SHIM WHERE NECESSARY.
5. ENCASE BOTTOM RIB IN CONCRETE TO A MIN. HEIGHT OF 150mm ABOVE RIB TO PROVIDE ANCHORAGE. REBAR TO CONNECT SECOND POUR TO THE CONCRETE BASE PAD.
6. WHEN EXTERNAL VALVES ARE MOUNTED, SUPPORT PIPING CONNECTIONS DIRECT TO CONCRETE PAD.
7. MAINTAIN A DRY SITE UNTIL BACKFILLING OPERATIONS COMMENCE.
8. USE A GOOD QUALITY SCREENING OR SAND AS BACKFILL MATERIAL TO REACH 90% COMPACTION.
9. PLACE THE BACKFILL IN EQUAL INCREMENTS NOT EXCEEDING 300mm THICK AROUND THE STATION TO PREVENT UNBALANCED LOADS BEING IMPOSED DURING BACKFILLING OPERATIONS. PROGRESSIVELY TAMP BACKFILL AROUND STATION TO FULL HEIGHT TO REDUCE SETTLEMENT TO AN ABSOLUTE MINIMUM.

wsp
4221 BALLOON PARK RD NE
ALBUQUERQUE, NM 87109
TEL: (505) 821-1801

W. DANIEL BOIVIN
NEW MEXICO
12933
PROFESSIONAL ENGINEER
07/14/2023

FINAL

PROJECT:
KAYENTA WWTP
CFID
POND SYSTEM
FINAL DESIGN

NAVAJO TRIBAL UTILITY AUTHORITY
PO BOX 170
FT. DEFIANCE, AZ 86504

WSP PROJECT No:
2151700011

REVISIONS

NO.	DATE	BY	APPROVED

DESIGNED BY:	WSP – BM
DRAWN BY:	WSP – AO
CHECKED BY:	WSP – BM
APPROVED BY:	WSP – BM
DATE:	07/14/2023

SHEET TITLE:
MLSS PUMP STATION DETAILS

SHEET NUMBER: C-304
REV. #
SHEET 19 OF 52 SHEETS

P:\consulting\projects\22\22-517-00011.NTUA-HPP Kayenta WWF\CAD\C-304_C-305_MLSS PUMP STATION DETAILS.dwg

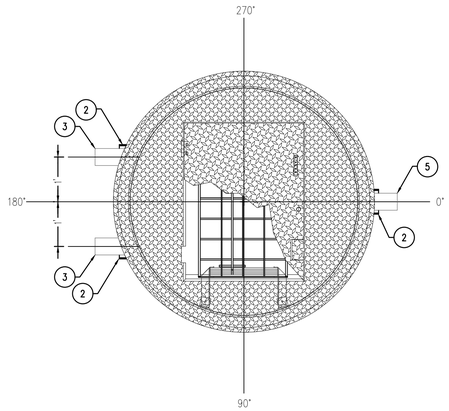

1B MLSS VALVE VAULT LAYOUT (PLAN)
NOT TO SCALE

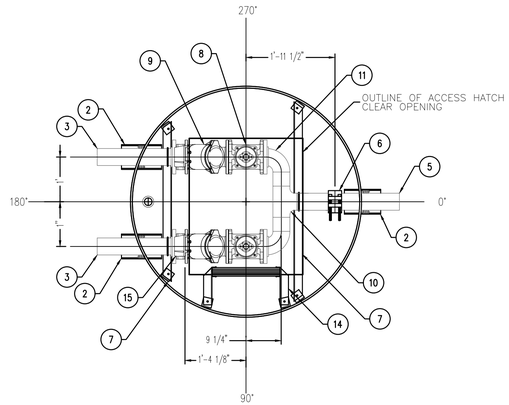

1A MLSS VALVE VAULT PIPING LAYOUT
NOT TO SCALE

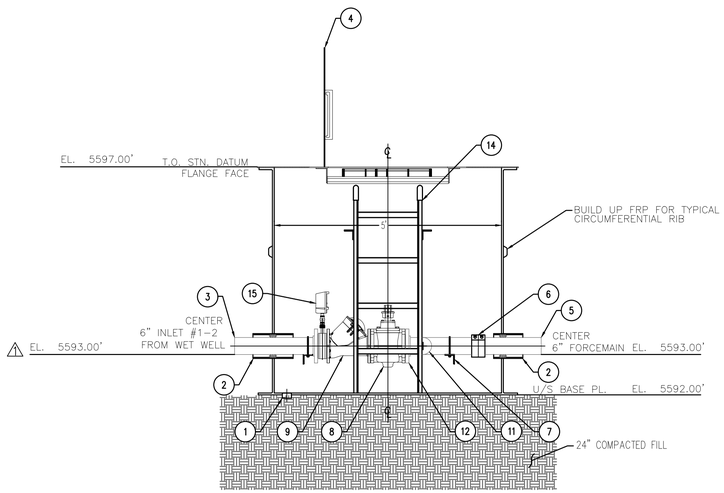

1 MLSS VALVE BOX (PROFILE)
NOT TO SCALE

BILL OF MATERIALS

ITEM	DESCRIPTION	QTY.
1	2" NPT DRAIN, FRP (PIPING TO WET WELL)	1
2	8" FRP SLEEVE c/w WRAP-IT LINK, MODEL WL-300/10 LINK (FIELD INSTALL)	3
3	6" INLET #1-2, SCH.10, 316 SS	2
4	69" O.D. ALUMINUM COVER c/w EJ SAFE HATCH, PEDESTRAIN RATED, SINGLE DOOR, COVER STAY, SS HARDWARE, SLAM LOCK, HANDLE, (MODEL FBC-30X36A05H-60R)	1
5	6" FORCEMAIN, SCH.10, 316 SS, TRANSITION TO 6" SCH 40 PVC	1
6	6" AXILOCK COUPLER, SST	1
7	HEADER SUPPORT (2.5x2.5x1/4"), ALUMINUM c/w PIPE CLAMPS	2
8	6" PLUG VALVE (AIS COMPLIANT), DEZURIK	2
9	6" CHECK VALVE, HDL 5087	2
10	6" STRAIGHT TEE, SCH.10, 316 SS	1
11	6" SR 90° ELBOW, SCH.10, 316 SS	2
12	6" -150# FLANGE, 316 SS	6
13	6" HYMAX COUPLERS, NOT SHOWN ON DRAWING (SHIPED LOOSE)	2
14	ALUMINUM LADDER, FULL LENGTH	1
15	6" ONYX PRESSURE ISOLATOR VALVE WITH GAUGE	2

FABRICATION DESIGN STANDARDS

1. XYLEM SPECIFICATION GE-1008-04, REVISION MAY 2002
2. AMEC 4S-10.01 MANUFACTURE AND INSTALLATION FOR FRP STRUCTURES
3. AMEC 4S-10.02 FRP PRESSURE PIPE, FITTINGS AND FLANGES

GENERAL NOTES

1. WINDING ANGLE – 75°
2. TANK WALL – VARIES WITH ELEVATION
3. LINER – C-GLASS VEIL AND (2)-1 1/2 oz. MATT
4. RESIN – ISOPHTHALIC
5. INTERIOR FINISH – WHITE ISOPHTHALIC NPG GELCOAT
6. EXTERIOR (ABOVE GRADE) TO HAVE DARK GREEN GELCOAT
7. DIMENSIONS ARE IN MILLIMETERS U.N.O.
8. APPROX. SHIPPING WEIGHT: 1,250 lbs

INSTALLATION PROCEDURES

1. USE THE LIFTING LUGS PROVIDED FOR VERTICAL HANDLING.
2. USE SLINGS AROUND THE MAIN TANK FOR HORIZONTAL HANDLING.
3. ENSURE UNIT IS STANDING VERTICAL ON CONCRETE PAD.
4. BOLT UNIT FIRMLY AND SQUARELY IN PLACE, SHIM WHERE NECESSARY.
5. ENCASE BOTTOM RIB IN CONCRETE TO A MIN. HEIGHT OF 150mm ABOVE RIB TO PROVIDE ANCHORAGE. REBAR TO CONNECT SECOND POUR TO THE CONCRETE BASE PAD.
6. WHEN EXTERNAL VALVES ARE MOUNTED, SUPPORT PIPING CONNECTIONS DIRECT TO CONCRETE PAD.
7. MAINTAIN A DRY SITE UNTIL BACKFILLING OPERATIONS COMMENCE.
8. USE A GOOD QUALITY SCREENING OR SAND AS BACKFILL MATERIAL TO REACH 90% COMPACTION.
9. PLACE THE BACKFILL IN EQUAL INCREMENTS NOT EXCEEDING 8" THICK AROUND THE STATION TO PREVENT UNBALANCED LOADS BEING IMPOSED DURING BACKFILLING OPERATIONS. PROGRESSIVELY TAMP BACKFILL AROUND STATION TO FULL HEIGHT TO REDUCE SETTLEMENT TO AN ABSOLUTE MINIMUM.

wsp
4221 BALLOON PARK RD NE
ALBUQUERQUE, NM 87109
TEL: (505) 821-1801

W. DANIEL BOIVIN
NEW MEXICO
12933
PROFESSIONAL ENGINEER
07/14/2023

FINAL

PROJECT:
KAYENTA WWTP CFID POND SYSTEM FINAL DESIGN

NAVAJO TRIBAL UTILITY AUTHORITY
PO BOX 170
FT. DEFIANCE, AZ 86504

WSP PROJECT No: 2151700011

REVISIONS			
NO.	DATE	BY	APPROVED

DESIGNED BY:	WSP – BM
DRAWN BY:	WSP – AO
CHECKED BY:	WSP – BM
APPROVED BY:	WSP – BM
DATE:	07/14/2023

SHEET TITLE:
MLSS VALVE VAULT DETAILS

SHEET NUMBER: C-305
REV. #
SHEET 20 OF 52 SHEETS

P:\consulting\projects\22\22-517-00011.NTUA-HPP Kayenta WWF\CAD\C-304_C-305_MLSS PUMP STATION DETAILS.dwg

NOTES:

1) STATION TO SHIP COMPLETE WITH PIPING PRE-INSTALLED.
2) STATION TO FEATURE 4:1 SAFETY FACTOR AGAINST WORST CASE LOADING CONDITIONS WITH WATER TABLE TO GRADE.
3) BASE PAD TO BE DESIGNED TO PROVIDE ADEQUATE BALLAST TO RESIST UPLIFT WITH WATER TABLE TO GRADE.
4) STATION TO SHIP COMPLETE WITH OPTIMIZED HYDRAULIC BENCHING.
5) STATION TO BE OFFERED WITH 25 YEAR WARRANTY ON THE STRUCTURE.

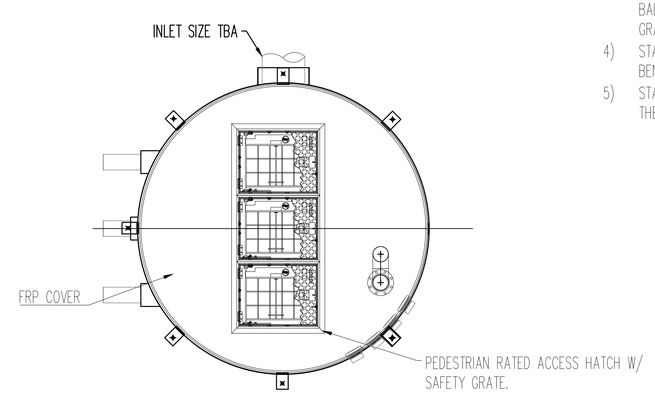

1A EFFLUENT PUMP STATION (PLAN)
NOT TO SCALE

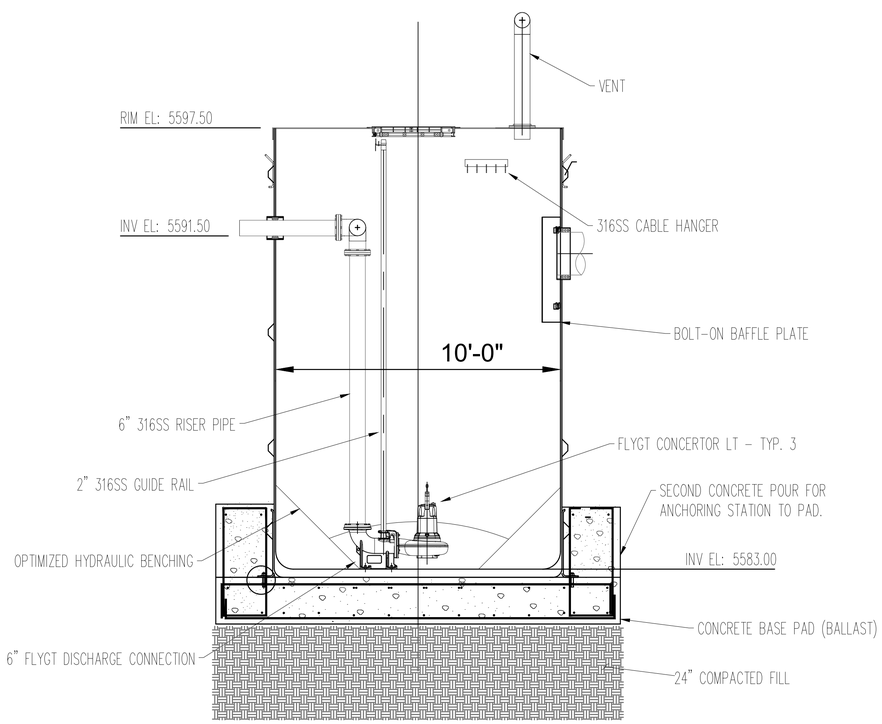

1 EFFLUENT PUMP STATION (PROFILE)
NOT TO SCALE

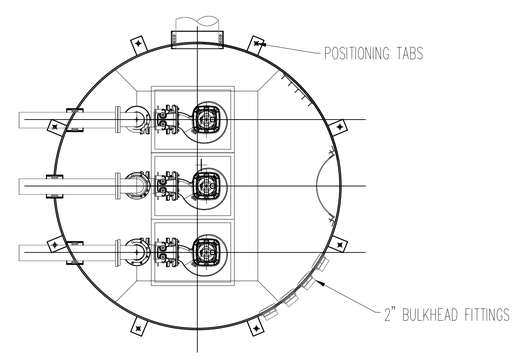

1B PUMPS LAYOUT
NOT TO SCALE

wsp
4221 BALLOON PARK RD NE
ALBUQUERQUE, NM 87109
TEL: (505) 821-1801

W. DANIEL BOIVIN
NEW MEXICO
12933
PROFESSIONAL ENGINEER
07/14/2023

FINAL

PROJECT:
KAYENTA WWTP CFID POND SYSTEM FINAL DESIGN

NAVAJO TRIBAL UTILITY AUTHORITY
PO BOX 170
FT. DEFIANCE, AZ 86504

WSP PROJECT No: 2151700011

REVISIONS

NO.	DATE	BY	APPROVED

DESIGNED BY:	WSP – BM
DRAWN BY:	WSP – AO
CHECKED BY:	WSP – BM
APPROVED BY:	WSP – BM
DATE:	07/14/2023

SHEET TITLE:
EFFLUENT PUMP STATION DETAILS

SHEET NUMBER: C-306
REV. #

P:\consulting\projects\22\22-517-00011.NTUA-HPP Kayenta WWF\CAD\C-306_C-307_EFFLUENT PUMP STATION & VALVE VAULT DETAIL.dwg

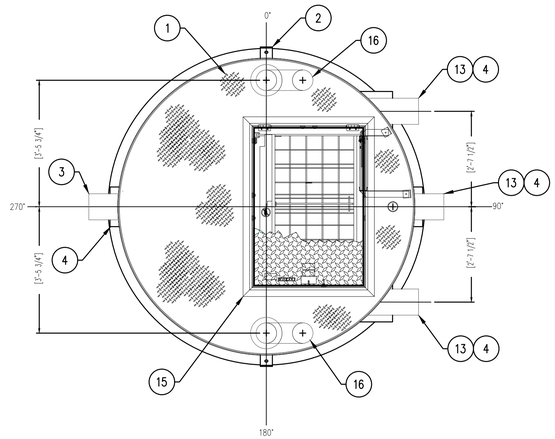

PLAN

1B EFFLUENT VALVE VAULT LAYOUT (PLAN)
NOT TO SCALE

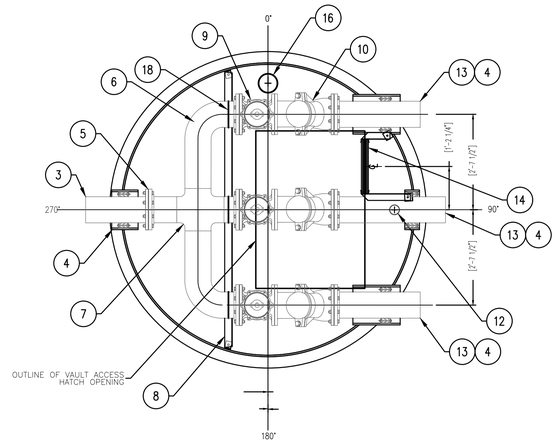

SECTION "A–A"

1A EFFLUENT VALVE VAULT PIPING LAYOUT
NOT TO SCALE

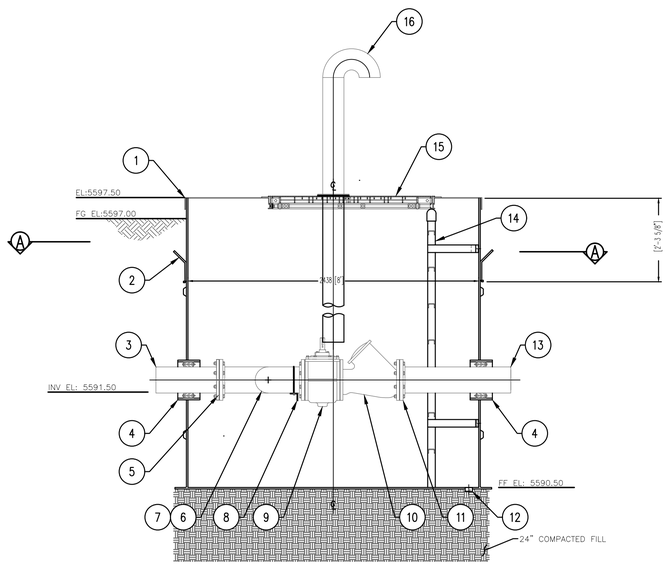

ELEVATION

NOTES:
SEE PLAN VIEW FOR TRUE ORIENTATION.
CONCRETE SHOWN FOR ILLUSTRATIVE PURPOSE ONLY.
FOUNDATION TO BE DESIGNED & SUPPLIED BY OTHERS.

1 EFFLUENT VALVE BOX (PROFILE)
NOT TO SCALE

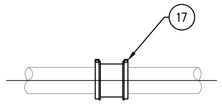

INCLUDED FLEXIBLE COUPLER
PIPING BETWEEN VALVE VAULT & WET WELL

BILL OF MATERIALS

QTY	DESCRIPTION	
1	BARSKI ALUMINUM CHECKER PLATE TOP c/w XYLEM (SAFE-HATCH), ALUM., PEDESTRIAN RATED	1
2	LIFTING LUGS (BOLT ON), MS., EPOXY COTED	2
3	200mmø [12"] FORCEMAIN, DIP	1
4	304.8mmø I.D. [12" I.D.] FRP SLEEVE c/w WRAP-IT, 12 LINK, WS-475 SEAL	4
5	200mmø [12"] SSP TO DIP FLANGE ADAPTER AND CONNECTION	1
6	200mmø [12"] SR 90° ELBOW, SCH.10, 316 SS	2
7	200mmø [12"] CROSS, SCH.10, 316 SS	1
8	HEADER SUPPORT (L64x64x6.4mm [2.5x2.5x1/4"]), ALUMINUM c/w PIPE CLAMPS	1
9	200mmø [6"] PLUG VALVE, VALMATIC, MODEL 5808RN	3
10	200mmø [6"] CHECK VALVE, HDL, MODEL 5087	3
11	200mm–150ø [6"] FLANGE, 316 SS	6
12	50mmø [2"] THREADED HALF COUPLING (DRAIN), FRP	1
13	200mmø [6"] INLET ø1–3, SCH.10, 316 SS	3
14	MARINE GRADE SAFETY LADDER, FULL LENGTH, ALUMINUM	1
15	XYLEM (SAFE-HATCH), ALUM./STEEL, PEDESTRIAN RATED, MODEL 13-43 00 83	1
16	150mmø [6"] GOOSENECK VENT, 316 SS c/w 150mm–150ø FLANGE, BIRDSCREEN & FRP DROP PIPE	2
17	200mmø [6"] FLEXIBLE COUPLER FOR CONNECTION TO WET WELL (NOT SHOWN/SHIPPED LOOSE)	3
18	12"x6" REDUCER, SCH.10, 316 SS	

FABRICATION DESIGN STANDARDS
1. FLYGT SPECIFICATION GE-1008-04, REVISION MAY 2002
2. AMEC 4S-10.01 MANUFACTURE AND INSTALLATION FOR FRP STRUCTURES
3. AMEC 4S-10.02 FRP PRESSURE PIPE, FITTINGS AND FLANGES

GENERAL NOTES
1. WINDING ANGLE – 75°
2. TANK WALL – VARIES WITH ELEVATION
3. LINER – C-GLASS VEIL AND (2)-1 1/2 oz. MATT
4. RESIN – ISOPHTHALIC
5. INTERIOR FINISH – WHITE ISOPHTHALIC NPG GELCOAT
6. EXTERIOR (ABOVE GRADE) TO HAVE DARK GREEN GELCOAT
7. DIMENSIONS ARE IN MILLIMETERS U.N.O.
8. APPROX. SHIPPING WEIGHT: 1,315 kg (2,900 lbs)

INSTALLATION PROCEDURES

THE FOLLOWING RECOMMENDATIONS ARE IN NO WAY MEANT TO REPLACE THE ENGINEERS INSTRUCTIONS OR SPECIFICATIONS AND MUST BE USED IN CONJUNCTION WITH THE EXISTING AND ANTICIPATED CONDITIONS AT THE JOBSITE.

1. USE SLINGS FOR VERTICAL AND HORIZONTAL HANDLING.
2. ENSURE UNIT IS STANDING VERTICAL ON CONCRETE PAD OR HARD PACKED GROUND.
3. LEVEL THE STATION.
4. MAINTAIN A DRY SITE UNTIL BACKFILLING OPERATIONS COMMENCE.
5. USE A GOOD QUALITY SCREENING OR SAND AS BACKFILL MATERIAL TO 90% COMPACTION.
6. PLACE THE BACKFILL IN EQUAL INCREMENTS NOT EXCEEDING 300mm THICK AROUND THE STATION TO PREVENT UNBALANCED LOADS BEING IMPOSED DURING BACKFILLING OPERATIONS. PROGRESSIVELY TAMP BACKFILL AROUND STATION TO FULL HEIGHT TO REDUCE SETTLEMENT TO AN ABSOLUTE MINIMUM.

wsp
4221 BALLOON PARK RD NE
ALBUQUERQUE, NM 87109
TEL: (505) 821-1801

W. DANIEL BOIVIN
NEW MEXICO
12933
PROFESSIONAL ENGINEER
07/14/2023

FINAL

PROJECT:
KAYENTA WWTP
CFID
POND SYSTEM
FINAL DESIGN

NAVAJO TRIBAL UTILITY AUTHORITY
PO BOX 170
FT. DEFIANCE, AZ 86504

WSP PROJECT No:
2151700011

REVISIONS

NO.	DATE	BY	APPROVED

DESIGNED BY:	WSP – BM
DRAWN BY:	WSP – AO
CHECKED BY:	WSP – BM
APPROVED BY:	WSP – BM
DATE:	07/14/2023

SHEET TITLE:
MLSS VALVE VAULT DETAILS

SHEET NUMBER: C-307
REV. #
SHEET 22 OF 52 SHEETS

P:\consulting\projects\22\22-517-00011.NTUA-HPP Kayenta WWF\CAD\C-306_C-307_EFFLUENT PUMP STATION & VALVE VAULT DETAIL.dwg

BUILD NOTES

1. PREPARE SUBGRADE FOR STRUCTURE INCLUDES EXCAVATION (3-FT BELOW BOTTOM FOUNDATION ELEV.
2. FILL CONSTRUCTION FOR STRUCTURES INCLUDING PLACEMENT AND COMPACTION OF SUITABLE ENGINEERED FILL MATERIAL.
3. EXCAVATE AND SPOIL UNSUITABLE MATERIAL.

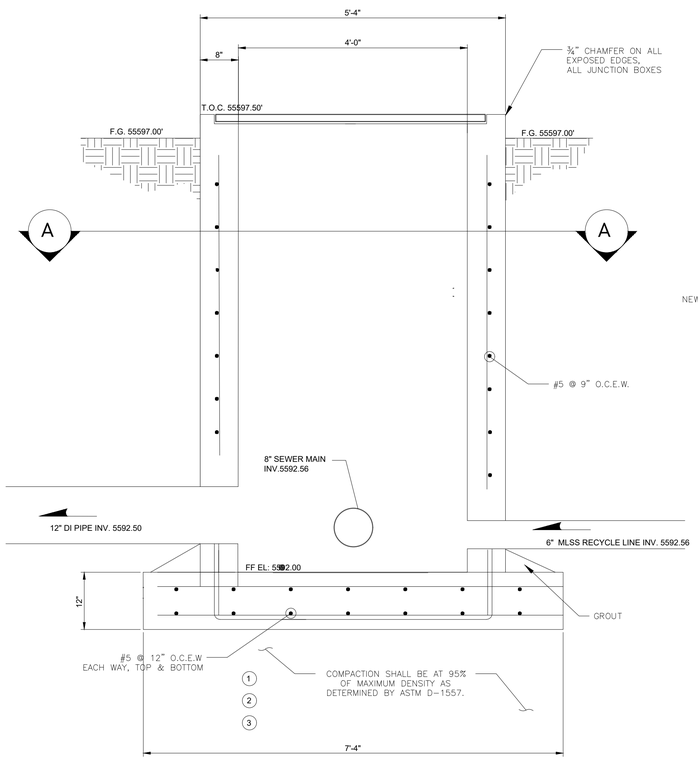

1 DIVERSION BOX STUCTURAL DETAILS (PROFILE)
NOT TO SCALE

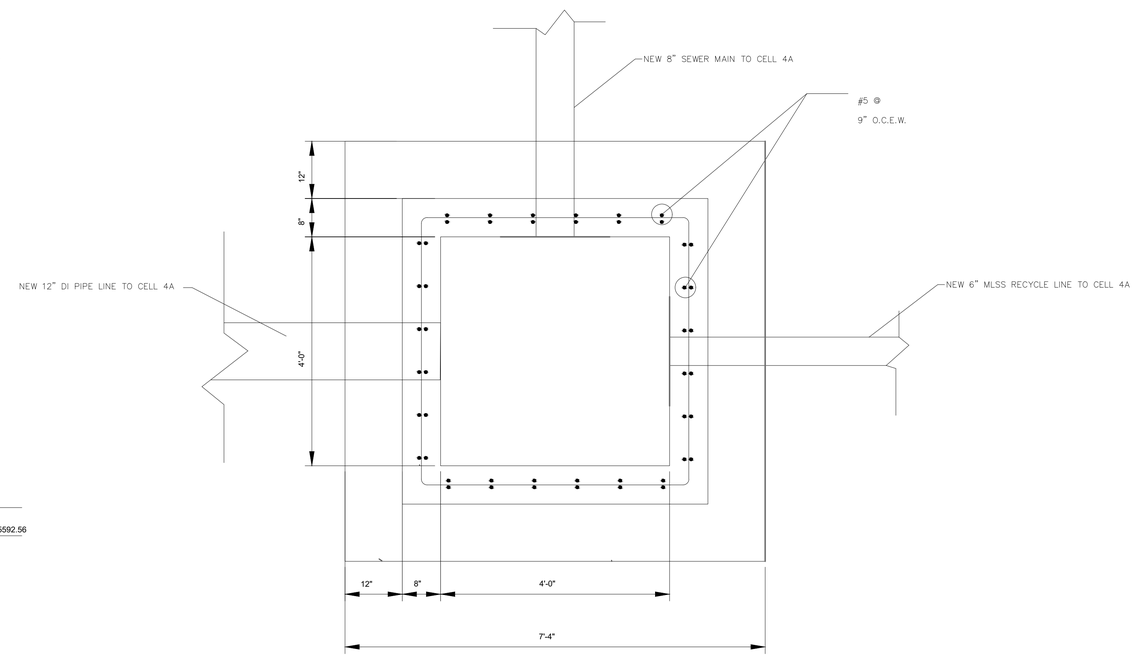

SECTION A-A'
NOT TO SCALE

wsp
4221 BALLOON PARK RD NE
ALBUQUERQUE, NM 87109
TEL: (505) 821-1801

07/14/2023

FINAL

PROJECT:
KAYENTA WWTP
CFID
POND SYSTEM
FINAL DESIGN

NAVAJO TRIBAL UTILITY AUTHORITY
PO BOX 170
FT. DEFIANCE, AZ 86504

WSP PROJECT No:
2151700011

REVISIONS			
NO.	DATE	BY	APPROVED

DESIGNED BY:	WSP – BM
DRAWN BY:	WSP – AO
CHECKED BY:	WSP – BM
APPROVED BY:	WSP – BM
DATE:	07/14/2023

SHEET TITLE:
DIVERSION BOX DETAILS

SHEET NUMBER:	REV. #
C-308	
SHEET 23 OF 52 SHEETS	

P:\consulting\projects\22\22-517-00011.NTUA-HPP Kayenta WWF\CAD\C-308_DIVERSION_BOX_DETAILS.dwg

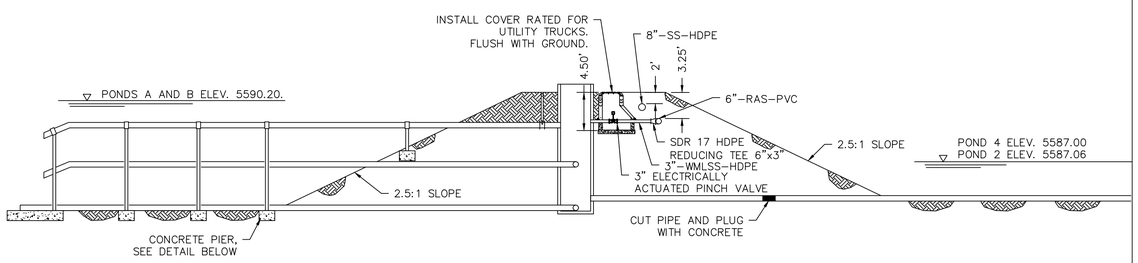

1 TYPICAL INTERIOR DIKE PONDS B TO 4 & PONDS A TO 2
NOT TO SCALE

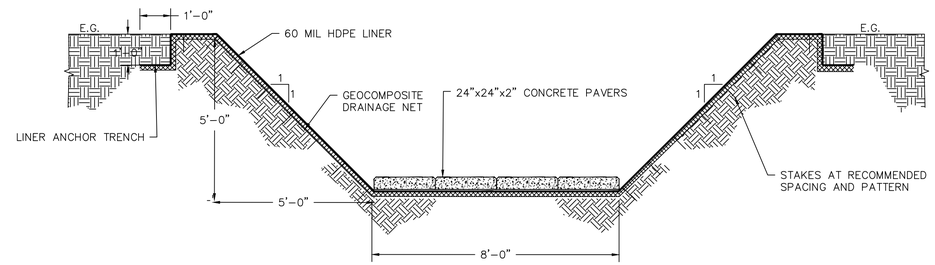

2 DISINFECTION EXTENSION CHAMBER DETAIL
NOT TO SCALE

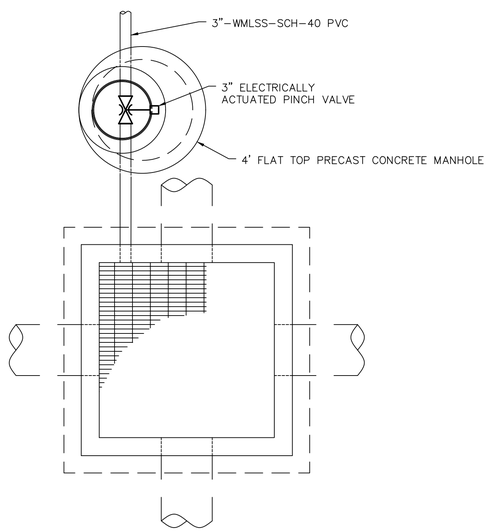

3 PLAN VIEW JUNCTION BOX
NOT TO SCALE

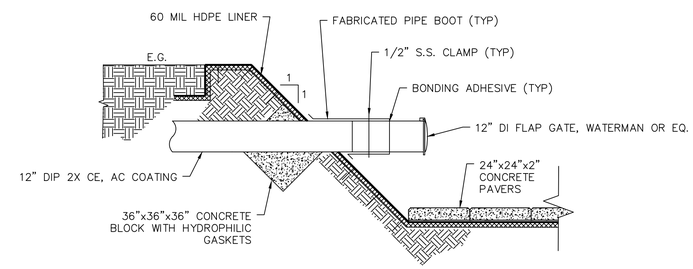

2A INLET PIPE DETAIL
NOT TO SCALE

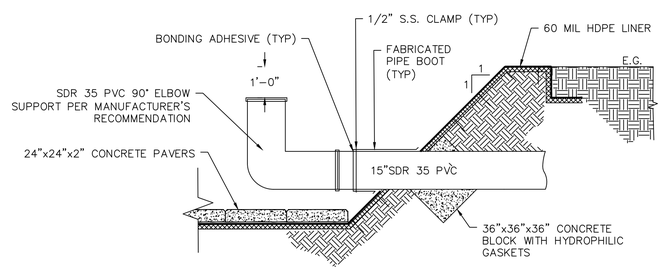

2B OUTLET PIPE DETAIL
NOT TO SCALE

wsp
4221 BALLOON PARK RD NE
ALBUQUERQUE, NM 87109
TEL: (505) 821-1801

W. DANIEL BOIVIN
NEW MEXICO
12933
PROFESSIONAL ENGINEER
07/14/2023

FINAL

PROJECT:
KAYENTA WWTP CFID POND SYSTEM FINAL DESIGN

NAVAJO TRIBAL UTILITY AUTHORITY
PO BOX 170
FT. DEFIANCE, AZ 86504

WSP PROJECT No:
2151700011

REVISIONS			
NO.	DATE	BY	APPROVED

DESIGNED BY:	WSP – BM
DRAWN BY:	WSP – AO
CHECKED BY:	WSP – BM
APPROVED BY:	WSP – BM
DATE:	07/14/2023

SHEET TITLE:
DETAILS

SHEET NUMBER:	REV. #
C-309	
SHEET 24 OF 52 SHEETS	

P:\consulting\projects\22\22-517-00011.NTUA-HPP Kayenta WWF\CAD\C-309_DETAILS.dwg

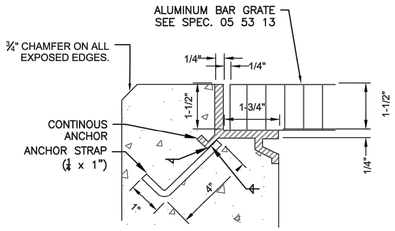

NOTES:
1. ALL NEW STRUCTURES WITH GRATING SHALL USE EMBEDDED GRATING FRAMES.
2. FRAMES SHALL HAVE MITRED CORNERS AND WELDED JOINTS AND SHALL BE SIZED TO MATCH GRATING DEPTHS.
3. VERTICAL AND HORIZONTAL LEGS OF THE FRAME SHAPE SHALL HAVE 1/4–INCH WALL THICKNESS. FRAME SHALL BE DESIGNED TO PROVIDE CONTINUOUS SLOT TO ACCOMMODATE FASTENERS, AND SHALL HAVE A CONTINUOUS EXTRUDED ANCHOR. SURFACES COMING INTO CONTACT WITH CONCRETE SHALL BE PAINTED WITH ONE COAT OF BITUMINOUS PAINT.

1 TYPICAL GRATE INSET (NEW STRUCTURES)
NOT TO SCALE

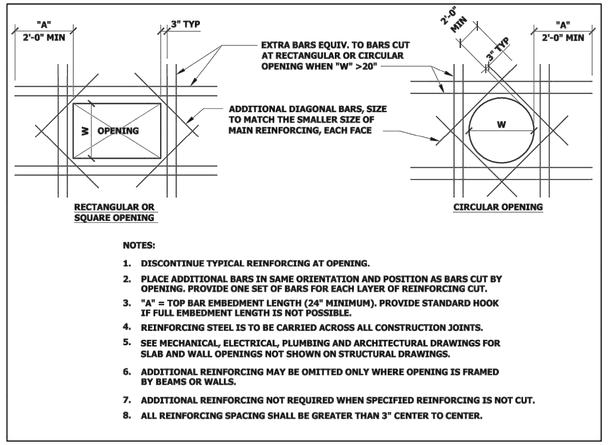

NOTES:
1. DISCONTINUE TYPICAL REINFORCING AT OPENING.
2. PLACE ADDITIONAL BARS IN SAME ORIENTATION AND POSITION AS BARS CUT BY OPENING. PROVIDE ONE SET OF BARS FOR EACH LAYER OF REINFORCING CUT.
3. "A" = TOP BAR EMBEDMENT LENGTH (24" MINIMUM). PROVIDE STANDARD HOOK IF FULL EMBEDMENT LENGTH IS NOT POSSIBLE.
4. REINFORCING STEEL IS TO BE CARRIED ACROSS ALL CONSTRUCTION JOINTS.
5. SEE MECHANICAL, ELECTRICAL, PLUMBING AND ARCHITECTURAL DRAWINGS FOR SLAB AND WALL OPENINGS NOT SHOWN ON STRUCTURAL DRAWINGS.
6. ADDITIONAL REINFORCING MAY BE OMITTED ONLY WHERE OPENING IS FRAMED BY BEAMS OR WALLS.
7. ADDITIONAL REINFORCING NOT REQUIRED WHEN SPECIFIED REINFORCING IS NOT CUT.
8. ALL REINFORCING SPACING SHALL BE GREATER THAN 3" CENTER TO CENTER.

4 CONCRETE PIPE PENETRATION (OPENINGS 12" TO 48")
NOT TO SCALE

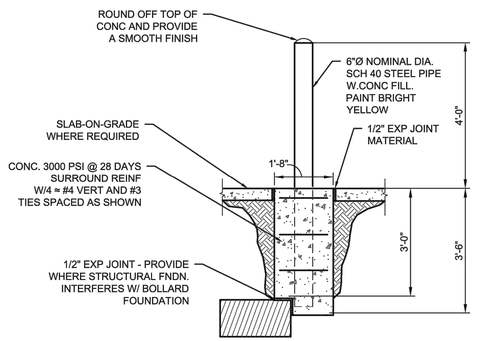

2 TYPICAL STATIONARY BOLLARD DETAIL
NOT TO SCALE

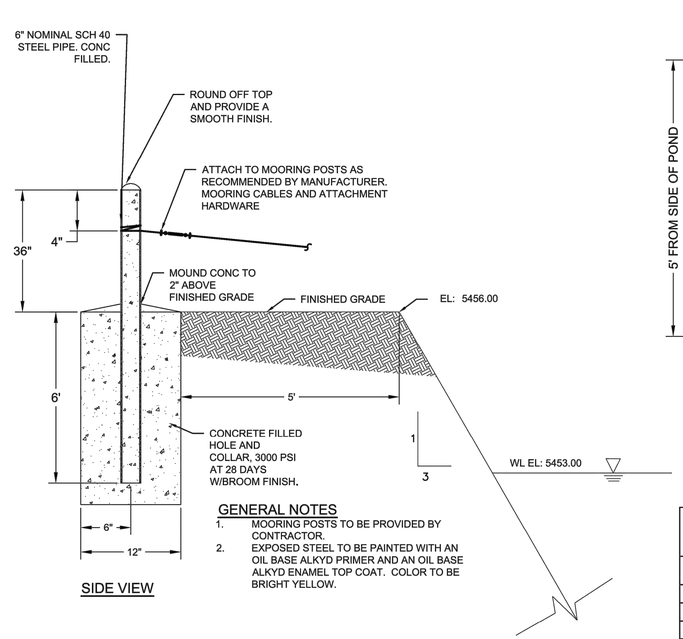

SIDE VIEW

GENERAL NOTES
1. MOORING POSTS TO BE PROVIDED BY CONTRACTOR.
2. EXPOSED STEEL TO BE PAINTED WITH AN OIL BASE ALKYD PRIMER AND AN OIL BASE ALKYD ENAMEL TOP COAT. COLOR TO BE BRIGHT YELLOW.

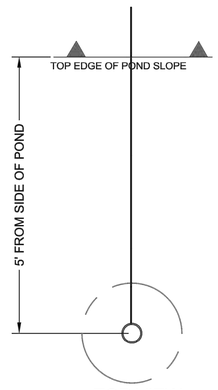

2 TOP VIEW

TABLE 1
DISTANCE BETWEEN MOORS (ANCHOR POSTS)

ROW	DISTANCE (FT)
1	300
2	300
3	300

NOTE: DOES NOT INCLUDE ADDITIONAL LENGTHS FOR SLACKING OF CABLING OR FOR ATTACHING TO MOORING POSTS.

5 AERATOR ANCHOR POST WEST SIDE OF POND
NOT TO SCALE

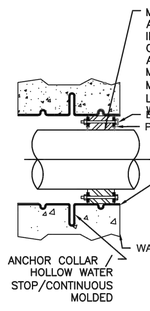

MODULAR/MECHANICAL SEALS SHALL BE MODULAR, ADJUSTABLE, BOLTED, MECHANICAL TYPE CONSISTING OF INTERLOCKING SYNTHETIC RUBBER LINKS SHAPED TO CONTINUOUSLY FILL THE ANNULAR SPACE BETWEEN THE PIPE AND SLEEVE. THE SEAL SHALL BE RATED BY THE MANUFACTURER FOR 40–FT OF HEAD OR 20 PSIG. MODULAR/MECHANICAL SEALS SHALL BE LINK–SEAL MODEL LS–(300,400,500)–S–316, O.E.A.E., FOR USE WITH WASTEWATER.

FOR OPENINGS WITH DIAMETERS UP TO 24.81" INSTALL MOLDED NON–METALLIC HIGH DENSITY POLYETHYLENE SLEEVES (HDPE) WITH INTEGRAL HOLLOW, MOLDED WATER–STOP RING FOUR INCHES LARGER THAN THE OUTSIDE DIAMETER OF THE SLEEVE ITSELF, CENTURY–LINE SLEEVE, OEAE. FOR OPENING FROM 29.25" TO 64.74" IN DIAMETER, USE A MODULAR HOLE–FORMING SYSTEM CONSISTING OF INTERLOCKING HDPE PLASTIC DISCS, CELL–CAST HOLE FORMING DISCS, O.E.A.E.

3 PIPE PENETRATION NEW WALLS OR FLOORS
NOT TO SCALE

NOTE:
THE ABOVE DETAIL APPLIES TO ALL NEW WALL AND FLOOR PIPE PENETRATIONS OTHER THAN THOSE IDENTIFIED IN THE "PVC INSERT LOCATION CHART" ON SHEET 177–BNR–718.

wsp
4221 BALLOON PARK RD NE
ALBUQUERQUE, NM 87109
TEL: (505) 821-1801

W. DANIEL BOIVIN
NEW MEXICO
12933
PROFESSIONAL ENGINEER
07/14/2023

FINAL

PROJECT:
KAYENTA WWTP
CFID
POND SYSTEM
FINAL DESIGN

NAVAJO TRIBAL UTILITY AUTHORITY
PO BOX 170
FT. DEFIANCE, AZ 86504

WSP PROJECT No:
2151700011

REVISIONS

NO.	DATE	BY	APPROVED

DESIGNED BY:	WSP – BM
DRAWN BY:	WSP – AO
CHECKED BY:	WSP – BM
APPROVED BY:	WSP – BM
DATE:	07/14/2023

SHEET TITLE:
DETAILS

SHEET NUMBER: C-310
REV. #
SHEET 25 OF 52 SHEETS

P:\consulting\projects\22\22-517-00011.NTUA-HPP Kayenta WWF\CAD\C-310_DETAILS.dwg

FREE-FLOW CAPACITY: 24.32 GPM [1.534 L/S] MINIMUM - 1,754 GPM [110.7 L/S] MAXIMUM

① STAFF GAUGE

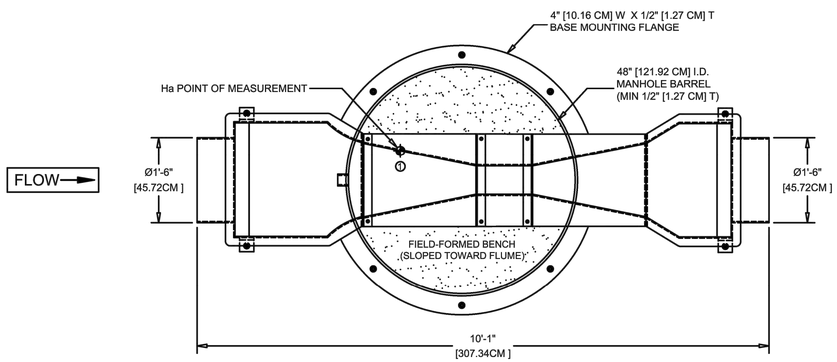

PLAN VIEW
(DOMED TOP NOT SHOWN FOR CLARITY)

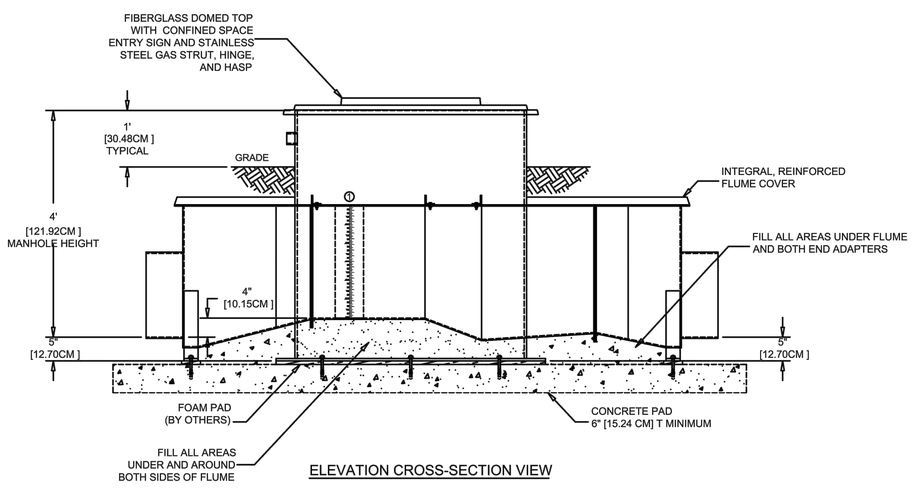

ELEVATION CROSS-SECTION VIEW

D 1941
D 3753

REV	REVISION DESCRIPTION	BY	DATE
1			

NOTES:
1) SIZING AND PROVISION FOR CONCRETE PAD BY OTHERS
2) FIELD-FORMED, SLOPPED BENCH TO TOP OF FLUME (CONCRETE OR SAND CAPPED BY CONCRETE), FILLING ALL AREAS UNDER AND AROUND BOTH SIDES OF FLUME, SHORING UP THE FLUME

This drawing and the data contained within is the sole, confidential property of OPENCHANNELFLOW (OCF) and may not be copied, reproduced, disclosed to others, in whole or in part, without the prior written consent of OCF. OCF reserves the right to change any dimension, finish, material, or method of construction indicated on this drawing at will and without notice. This drawing is provided in confidence with the understanding it shall be returned to OCF upon demand.

OPENCHANNELFLOW
BOISE | ATLANTA

DWG NO. PMM-4-D-P6-18P-N-S-N-N (4) DATE 22.08.29

DOMED TOP MANHOLE, Ø48", W/ 6" PARSHALL, Ø18" STUBS, & GAUGE

Unless otherwise indicated, dimensions are in feet and inches, with centimeters indicated in [ ]. Angles are in degrees.

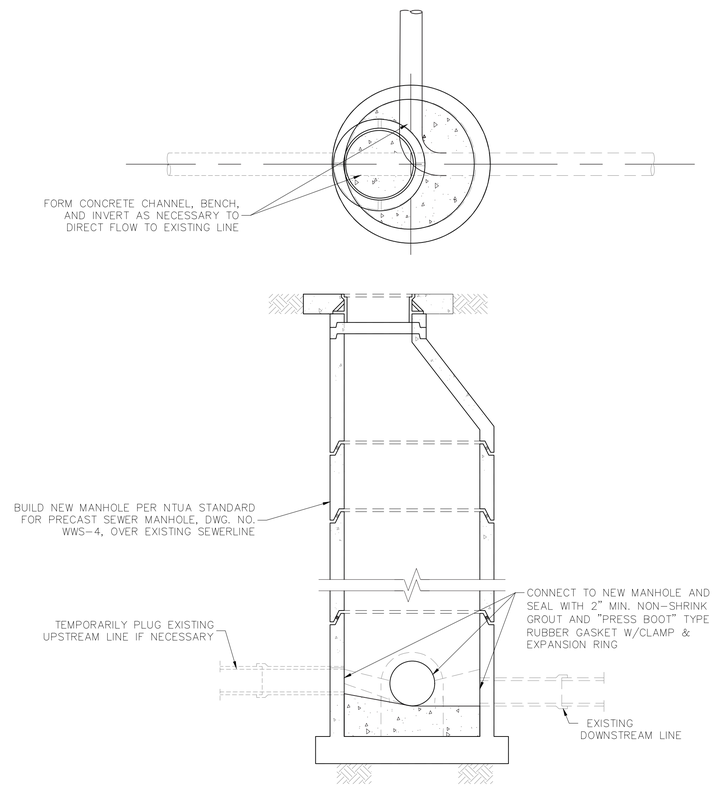

2 CONNECTION TO EXISTING SEWERLINE WITH NEW MH
NOT TO SCALE

wsp
4221 BALLOON PARK RD NE
ALBUQUERQUE, NM 87109
TEL: (505) 821-1801

W. DANIEL BOIVIN
NEW MEXICO
12933
PROFESSIONAL ENGINEER
07/14/2023

FINAL

PROJECT:
KAYENTA WWTP
CFID
POND SYSTEM
FINAL DESIGN

NAVAJO TRIBAL UTILITY AUTHORITY
PO BOX 170
FT. DEFIANCE, AZ 86504

WSP PROJECT No:
2151700011

REVISIONS

NO.	DATE	BY	APPROVED

DESIGNED BY:	WSP – BM
DRAWN BY:	WSP – AO
CHECKED BY:	WSP – BM
APPROVED BY:	WSP – BM
DATE:	07/14/2023

SHEET TITLE:
MANHOLE DETAILS

SHEET NUMBER: C-311
REV. #
SHEET 26 OF 52 SHEETS

P:\consulting\projects\22\22-517-00011.NTUA-HPP Kayenta WWF\CAD\C-311_METER MANHOLE DETAIL.dwg

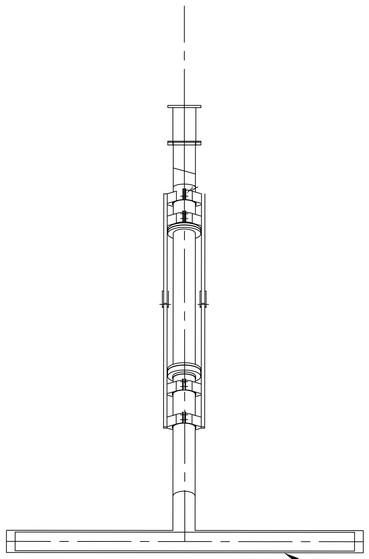

1 FLOATING DECANTER (PLAN)
NOT TO SCALE

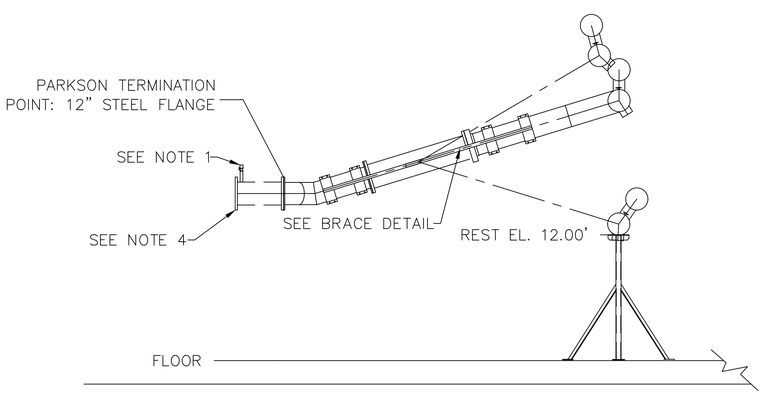

2 FLOATING DECANTER (PROFILE)
NOT TO SCALE

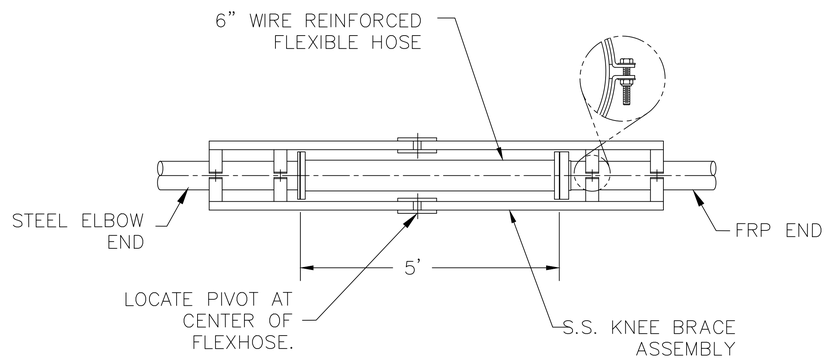

3 BRACE DETAIL
NOT TO SCALE

NOTES:

1) ALL FLANGES SHALL MEET OUTSIDE DIAMETER, BOLT CIRCLE DIAMETER, NUMBER AND SIZE OF HOLES PER ANSI B.16.1 125 LB. CAST IRON, AND ANSI B16.5 150 LB. STEEL FLANGE SPECIFICATIONS.

2) CONTRACTOR NEEDS TO PROVIDE A 3/4 " NIPPLE AND GLOBE VALVE BETWEEN OUTSIDE OF DECANTER SPOOL PENETRATION AND EFFLUENT CONTROL VALVE TO SERVE AS A FILL PORT TO SINK DECANTER AT START-UP.

3) DECANTER OUTLET PIPING MUST BE DESIGNED WITH A SUBMERGED OUTLET OR TRAPS TO PREVENT AIR FROM ENTERING THE DECANTER.

4) CONTRACTOR TO SUPPLY ALL INTERCONNECTING HARDWARE AND GASKETS.

5) DECANTER REST ASSEMBLY SHALL BE PROVIDED AND INSTALLED IN ACCORDANCE TO MANUFACTURER'S RECOMMENDATIONS.

wsp
4221 BALLOON PARK RD NE
ALBUQUERQUE, NM 87109
TEL: (505) 821-1801

W. DANIEL BOIVIN
NEW MEXICO
12933
PROFESSIONAL ENGINEER
07/14/2023

FINAL

PROJECT:
KAYENTA WWTP
CFID
POND SYSTEM
FINAL DESIGN

NAVAJO TRIBAL UTILITY AUTHORITY
PO BOX 170
FT. DEFIANCE, AZ 86504

WSP PROJECT No:
2151700011

REVISIONS			
NO.	DATE	BY	APPROVED

DESIGNED BY:	WSP – BM
DRAWN BY:	WSP – AO
CHECKED BY:	WSP – BM
APPROVED BY:	WSP – BM
DATE:	07/14/2023

SHEET TITLE:
FLOATING DECANTER DETAILS

SHEET NUMBER:	REV. #
C-312	
SHEET 27 OF 52 SHEETS	

P:\consulting\projects\22\22-517-00011.NTUA-HPP Kayenta WWF\CAD\C-312_FLOATING_DECANTER_DETAIL.dwg

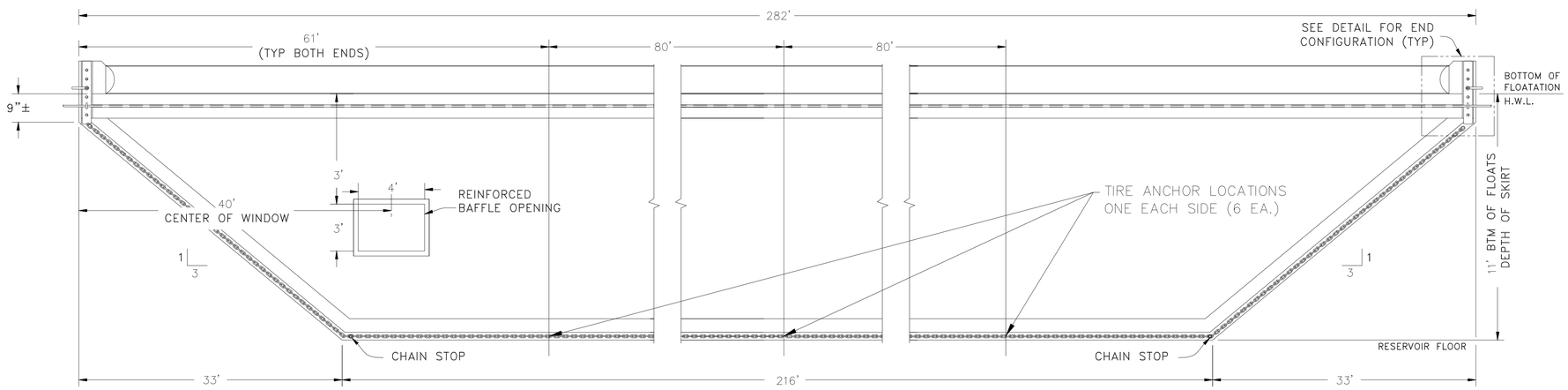

7 BAFFLE CURTAIN DETAIL PROFILE
NOT TO SCALE

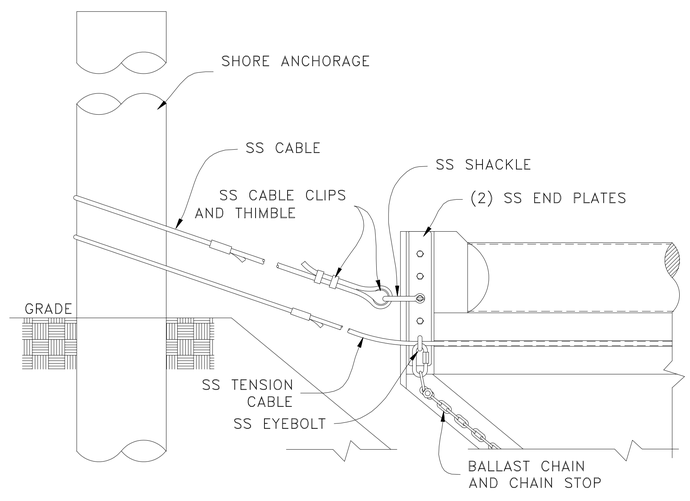

9 END CONNECTION DETAIL
NOT TO SCALE

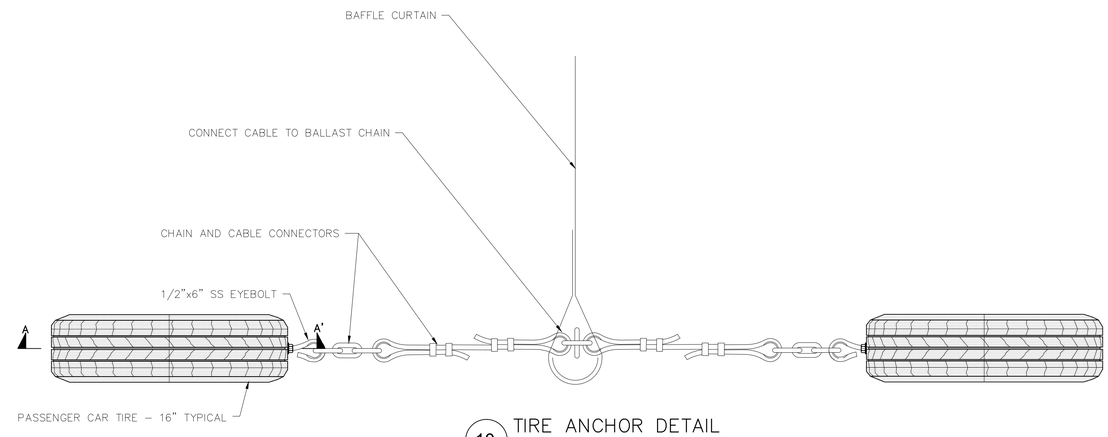

10 TIRE ANCHOR DETAIL
NOT TO SCALE

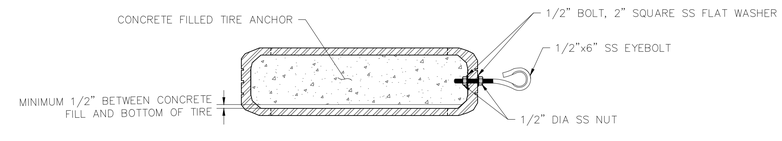

SECTION A–A'
NOT TO SCALE

wsp
4221 BALLOON PARK RD NE
ALBUQUERQUE, NM 87109
TEL: (505) 821-1801

W. DANIEL BOIVIN
NEW MEXICO
12933
PROFESSIONAL ENGINEER
07/14/2023

FINAL

PROJECT:
KAYENTA WWTP
CFID
POND SYSTEM
FINAL DESIGN

NAVAJO TRIBAL UTILITY AUTHORITY
PO BOX 170
FT. DEFIANCE, AZ 86504

WSP PROJECT No:
2151700011

REVISIONS			
NO.	DATE	BY	APPROVED

DESIGNED BY:	WSP – BM
DRAWN BY:	WSP – AO
CHECKED BY:	WSP – BM
APPROVED BY:	WSP – BM
DATE:	07/14/2023

SHEET TITLE:
BAFFLE CURTAIN DETAILS

SHEET NUMBER:	REV. #
C-313	
SHEET 28 OF 52 SHEETS	

P:\consulting\projects\22\22-517-00011.NTUA-HPP Kayenta WWF\CAD\C-313_BAFFLE CURTAIN DETAILS.dwg

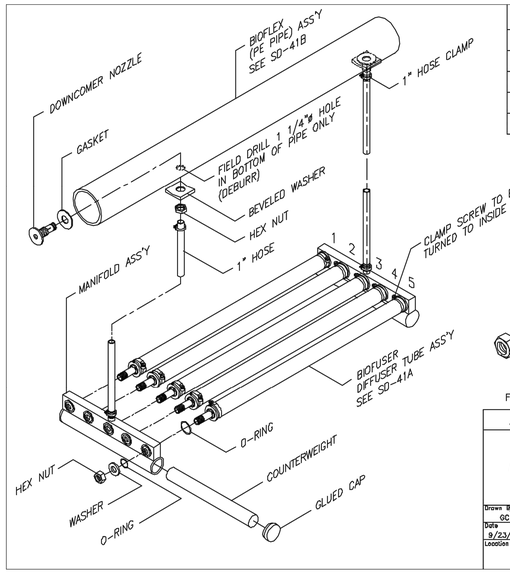

ASSEMBLY DESCRIPTION		
SERIES No.	DIFFUSER TUBES	PLUG BOLT
2002/3002	1 & 5	2, 3, & 4
2003/3003	1, 3 & 5	2 & 4
2004/3004	1, 2, & 4, 5	3
2005/3005	1 THRU 5	NONE

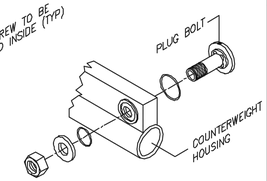

PLUG BOLT DETAIL
TO BE USED WHEN LESS THAN FIVE(5) DIFFUSER TUBES ARE REQUIRED

PARKSON CORPORATION
BIOLAC ®SYSTEM
BIOFLEX®BIOFUSER™ASS'Y
SERIES 2000/3000

Drawn By	Checked By	Approved By	Micro Rev.	CAD No.	REF No.
GC	JSD	MCC			
Date 9/23/97	Date 9/23/97	Date 9/23/97	Date	DWG Scale NONE	CAD Scale 12
Location				DWG No. SD-41	Rev. A

BIOFUSER™ASSEMBLY

THE BIOFUSER DIFFUSER ASSEMBLY IS SHIPPED LOOSE AND ASSEMBLED IN THE FIELD BY CONTRACTOR. THE BIOFUSER ASSEMBLY SHOULD BE ASSEMBLED BEFORE THE PE PIPE IS WELDED TOGETHER. THE COUNTERWEIGHT CAN BE INSTALLED AT THIS TIME, OR FOR HANDLING PURPOSES, INSTALLED JUST BEFORE THE DOWNCOMER HOSES ARE CONNECTED.

TO ASSEMBLE USE THIS WITH S.D. DRAWING SD-41

A. TO ASSEMBLE THE DIFFUSER TUBES INTO THE MANIFOLD, SELECT A FLAT SURFACE (TABLE). MAKE SURE THE TABLE IS SMOOTH AND NO SHARP EDGES THAT COULD CUT THE DIFFUSER SHEATHS.

B. PLACE TWO MANIFOLDS ON THE TABLE ONE AT EACH END AND AS MANY DIFFUSER TUBES AS REQUIRED PER APPROPRIATE DRAWING. PLACE TWO WOODEN 2x4"s UNDER AND PERPENDICULAR TO THE TUBES TO RAISE THE TUBES OFF THE TABLE.

C. SLIDE THE LARGE O-RING OVER THE BOSS ON THE END OF THE DIFFUSER TUBE. THEN INSERT ONE END OF THE DIFFUSER TUBE INTO THE MANIFOLD. MAKE SURE THE O-RING IS PROPERLY SEATED AND THE SCREW ON THE CLAMP IS FACING TO THE INSIDE. NEXT, INSTALL THE OUTSIDE(SMALL) O-RING AND PROPERLY SEAT INTO THE O-RING GROOVE IN THE MANIFOLD. THEN SLIDE THE WASHER OVER THE BOLT AND AGAINST THE O-RING. START THE NUT ONTO THE BOLT, APPLY MAX. TWO(2) DROPS LOCTITE #425 ON THE BOLT THREADS, OUTSIDE THE WASHER.

MAKE SURE THAT THE LOCATING GROOVES ON THE TUBES LINE UP WITH THE LOCATING PINS ON THE MANIFOLD. THEN SCREW THE NUT UNTIL HAND TIGHT.

INSTALL ALL THE DIFFUSER TUBES, AND PLUG BOLTS IF REQUIRED, INTO ONE MANIFOLD THEN INSTALL THE MANIFOLD ONTO THE OTHER END USING THE SAME PROCEDURE.
AFTER THE TUBES ARE ASSEMBLED TO THE MANIFOLDS HAND TIGHT, TORQUE ALL NUTS TO 135 IN-LBS.

CAUTION: AFTER THE BIOFUSERS ARE ASSEMBLED, DO NOT STACK THE ASSEMBLIES ON TOP OF ONE ANOTHER, AS THIS CAN DAMAGE THE SHEATHS. LAY THE ASSEMBLIES ON THEIR SIDE, MAKING SURE THAT NOTHING MAKES CONTACT AGAINST THE DIFFUSER SHEATHS.

PARKSON CORPORATION
BIOLAC ®SYSTEM
BIOFUSER™DIFFUSER ASS'Y
SERIES 2000

Drawn By	Checked By	Approved By	Micro Rev.	CAD No.	REF No.
GC	JSD	MCC			
Date 10/10/96	Date 10/16/96	Date 10/16/96	Date	DWG Scale NONE	CAD Scale 12
Location				DWG No. SD-41A	Rev.

BIOFLEX©(PE PIPE) ASSEMBLY

The floating lateral consists of HDPE pipe, end fittings and downcomer fittings. The pipe will be shipped in 20 ft or 40 ft length (normally 40 ft), and must be field welded (fusion welded) together by installation contractor.

In order to inspect the integrity of the fusion welds, the following procedure should be followed: Each welder will be required to make one test sample weld at the start and end of each days welding. An additional test sample should be made for every twenty(20) welds. The samples should be least 6' long overall.
Each weld sample should have three straps, 1" wide, cut lengthwise. Each strap is bent 90'. If there are any voids or gaps, the weld is unacceptable. These samples should then be sent back to Parkson for inspection.

A. Field drill and match mark the PE pipe as per the pipe hole layout drawings furnished. Most of the pipe will have lettering in line full length of the pipe. This can be used as a hole centerline,as it is important that all the drilled holes be in line. Layout and drill the holes (1 1/4") using a hole saw. After drilling, deburr the hole inside and outside the pipe to provide a good seal. The downcomer fittings can be installed as they are drilled or as the pipe is being welded.

B. To install the downcomer fittings use an electrician's steel fish tape or heavy wire of sufficient length to extend the full length of the unwelded pipe (max. 40 ft).

Slide the nut and beveled washer onto the fish tape, then insert the fish tape into the hole in the pipe until is accessible from the end of the pipe. Slide the downcomer fitting with rubber washer over the end of the fish tape and secure with a wire hook so the fitting will not slide off the fish tape. Pull the fish tape back through the hole untill the downcomer fitting is pulled through the hole.

Position the fittting so the two(2)raised bosses on the trough of the fitting are parallel to the length of the pipe. Then slide the washer over the fitting, apply Loctite Assure #425 to the threads on the fitting under the nut then screw the nut onto the fitting and torque to 135 in-lbs.

C. The pipe should be welded together at the edge of the basin, starting with the closed end so it can be floated into the basin as it is welded together. Note a special hose adapter is to be welded to the open of the pipe. When the PE pipe has been completely welded together cut the Hi-temp hose to length as shown on drawings. Attach one end of hose to the PE pipe adapter and other end to hose adapter at the air header on shore. Assemble and attach the restraining cable/chain to both ends of the PE pipe as shown on the assembly drawing.

D. The downcomer hose can be attached to the pipe downcomer fitting as the pipe is being welded together and before it enters the basin. Plug the end of the hose to prevent waste from entering the hose. Coil the hose and tie the hose to the PE pipe with twine.
The diffuser assemblies can be attached to the downcomer hoses from a boot or could be attached to the downcomer hose then tied to the PE pipe on shore before it enters the basin. It is absolutely critical that the downcomer hoses are straight and free of twists and kinks. If it is attached on shore, special care must be taken so that the diffuser sheath does not drag on the ground and get damaged.

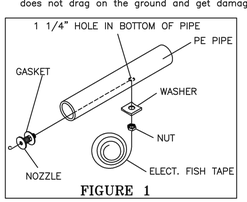

FIGURE 1

PARKSON CORPORATION
BIOLAC ®SYSTEM
BIOFLEX®ASSEMBLY

Drawn By	Checked By	Approved By	Micro Rev.	CAD No.	REF No.
G.C.	JSD	MCC			
Date 9/25/97	Date 9/25/97	Date 9/25/97	Date	DWG Scale	CAD Scale
Location				DWG No. SD-41B	Rev.

E. Pull the entire aeration chain into position in the basin by pulling the restraining chain. Make sure that you also pull and position the aeration chain hose. Attach the restraining chain to the hooks located on the sides of the basin. Repeat the above until all the aeration chains are

F. Once the aeration chains are secured into position and the hose attached to the air header, they are ready to be tested for air leaks. Fully open all butterfly valves at each aeration chain connection. Turn on blowers, (refer to Part II Section 2 prior to starting blowers) and start checking for air bubbles and/or hissing sounds. The leak will be fairly easy to detect as bubbling at the leaks. Also check that all the diffuser assemblies have identical bubble patterns.

G. If the basin has been dewatered, or if new construction, the chains can be assembled in the bottom of the basin. If the basin has a liner, special care must be taken so as not to damage or cut the liner. The PE pipe can be drilled and welded together in the bottom of the basin, but not recommended if basin is lined.

Connect the downcomer hoses to the PE pipe then strecth the hose and connect to the diffuser assembly, making sure there are no twists or kinks in the hose. The diffuser assemblies should then be placed near the PE pipe.

Connect one end of the air feed hose to the PE pipe. Plug the other end of the hose so it cannot fill with water. Attach a rope to the end of the hose and secure to shore.

Attach the restraining chains to the PE pipe. Tie a rope to the end of the chain and secure to the anchor post on shore. As the basin is being filled with water occasionally retie the ropes to shore.

When the water has reached the required side water (S.W.D.) per drawing, adjust and secure the restraining chains to the anchor post. Attach the air feed hose to the air adapter at shore. Adjust and cut hose if necessary at startup per Parkson Representative instruction.

PARKSON CORPORATION
BIOLAC ®SYSTEM
BIOFLEX®ASSEMBLY

Drawn By	Checked By	Approved By	Micro Rev.	CAD No.	REF No.
G.C.	JSD	MCC			
Date 9/25/97	Date 9/25/97	Date 9/25/97	Date	DWG Scale	CAD Scale
Location				DWG No. SD-41C	Rev.

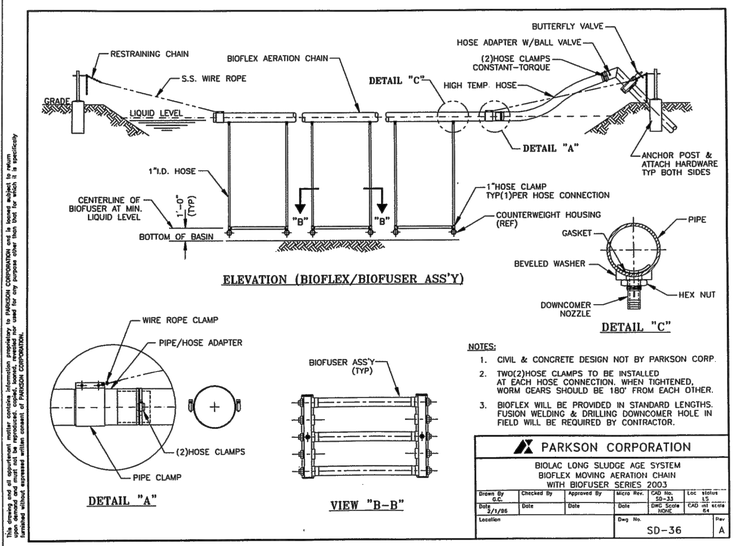

This drawing and all specifications and/or contents, information provided by PARSON CORPORATION and is hereby subject to patent and other proprietary rights. Any reproduction, publication, or disclosure to third parties, in whole or in part, is prohibited without expressed written consent of PARSON CORPORATION.

NOTES:
1. CIVIL & CONCRETE DESIGN NOT BY PARKSON CORP.
2. TWO(2)HOSE CLAMPS TO BE INSTALLED AT EACH HOSE CONNECTION. WHEN TIGHTENED, WORM GEARS SHOULD BE 180' FROM EACH OTHER.
3. BIOFLEX WILL BE PROVIDED IN STANDARD LENGTHS. FUSION WELDING & DRILLING DOWNCOMER HOLE IN FIELD WILL BE REQUIRED BY CONTRACTOR.

PARKSON CORPORATION
BIOLAC LONG SLUDGE AGE SYSTEM
BIOFLEX MOVING AERATION CHAIN
WITH BIOFUSER SERIES 2003

Drawn By	Checked By	Approved By	Micro Rev.	CAD No.	Loc station
G.C.				SD-33	L5
Date 3/1/96	Date	Date	Date	DWG Scale NONE	CAD Scale 1=1/8 A4
Location				Dwg No. SD-36	Rev. A

4221 BALLOON PARK RD NE
ALBUQUERQUE, NM 87109
TEL: (505) 821-1801

W. DANIEL BOIVIN
NEW MEXICO
12933
PROFESSIONAL ENGINEER
07/14/2023

FINAL

PROJECT:
KAYENTA WWTP
CFID
POND SYSTEM
FINAL DESIGN

NAVAJO TRIBAL UTILITY AUTHORITY
PO BOX 170
FT. DEFIANCE, AZ 86504
WSP PROJECT No:
2151700011

REVISIONS			
NO.	DATE	BY	APPROVED

DESIGNED BY:	WSP – BM
DRAWN BY:	WSP – AO
CHECKED BY:	WSP – BM
APPROVED BY:	WSP – BM
DATE:	07/14/2023

SHEET TITLE:
BIOFUSER DETAILS

SHEET NUMBER:	REV. #
C-400	
SHEET 29 OF 52 SHEETS	

P:\consulting\projects\22\22-517-00011.NTUA-HPP Kayenta WWF\CAD\C-400_BIOFUSER DETAILS.dwg

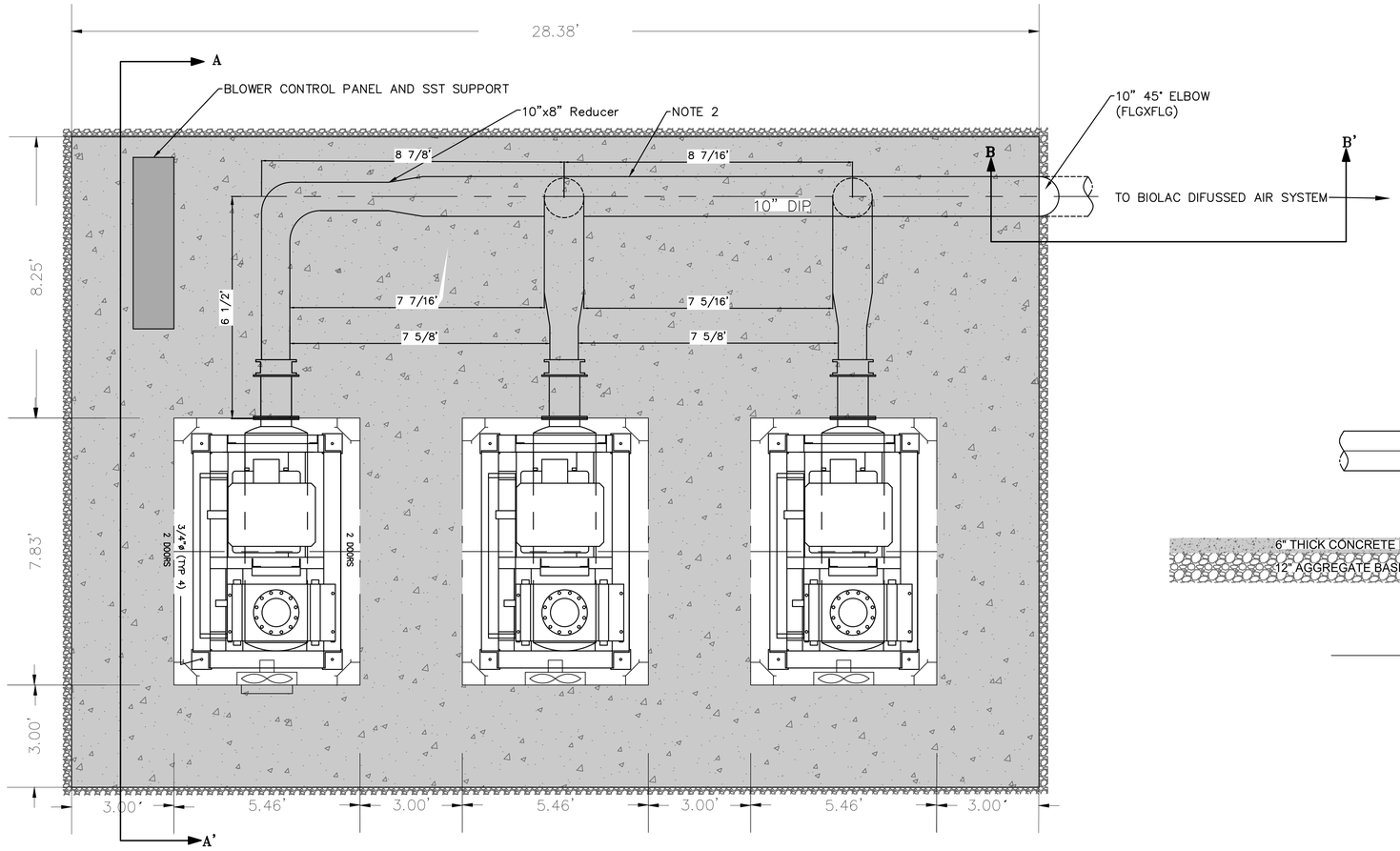

PLAN VIEW

NOTES:

1. CONTRACTOR TO FIELD MEASURE AND CUT LENGTHS OF SPOOL PIECES NEEDED BETWEEN THE FLANGE AT BLOWER AND THE CENTERLINE OF AIR HEADER AS SHOWN IN THE PLANS.
2. CONTRACTOR SHALL DESIGN, SUPPLY AND INSTALL PIPE SUPPORT SYSTEM USING MANUFACTURER'S STANDARD AVAILABLE PIPE SUPPORT HARDWARE, COMPLYING WITH ANSI/MSS SP-69.
3. ALL EXPOSED PIPING AND SUPPORT ASSEMBLIES SHALL BE COATED PER MANUFACTURER'S RECOMMENDATIONS.
4. ALL EXPOSED AIR PIPING SHALL BE FLANGED CONNECTION.
5. BLOWER MAKE/MODEL: GARDNER DENVER "HELIFLOW" 624-A-10x8E SERIES BY PARKSON CORPORATION OR EQUAL WITH WEATHER PROOF ENCLOSURE AND COOLING FAN.
6. INSTALL SIGNAGE OF CAUTION FOR EXTREMELY HOT AIR PIPING.

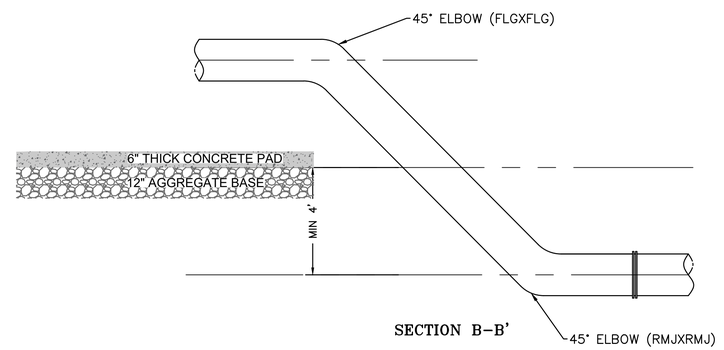

SECTION B-B'

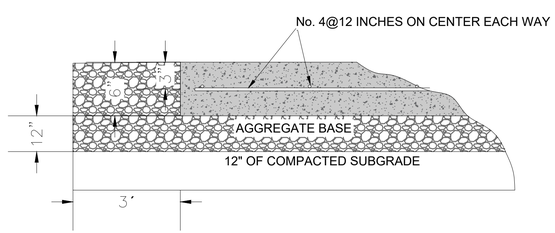

BLOWER PAD SLAB ON GRADE DETAIL

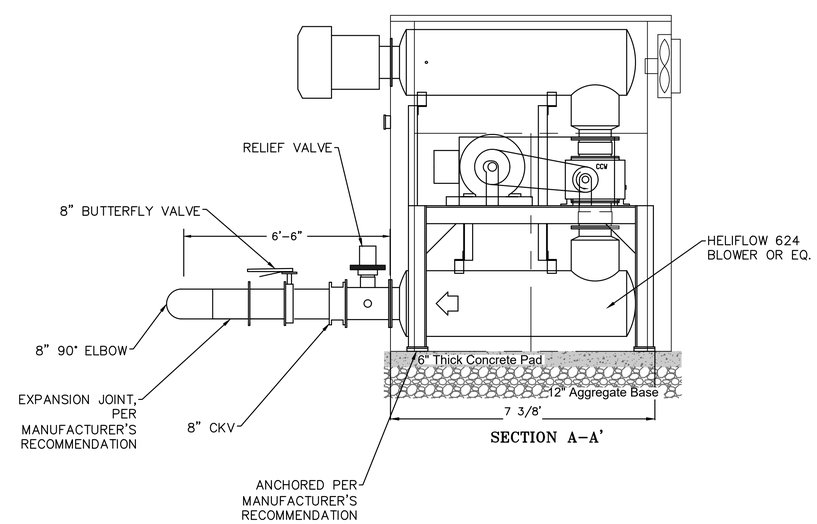

SECTION A-A'

wsp
4221 BALLOON PARK RD NE
ALBUQUERQUE, NM 87109
TEL: (505) 821-1801

W. DANIEL BOIVIN
NEW MEXICO
12933
PROFESSIONAL ENGINEER
07/14/2023

FINAL

PROJECT:
KAYENTA WWTP
CFID
POND SYSTEM
FINAL DESIGN

NAVAJO TRIBAL UTILITY AUTHORITY
PO BOX 170
FT. DEFIANCE, AZ 86504

WSP PROJECT No:
2151700011

REVISIONS			
NO.	DATE	BY	APPROVED

DESIGNED BY:	WSP – BM
DRAWN BY:	WSP – AO
CHECKED BY:	WSP – BM
APPROVED BY:	WSP – BM
DATE:	07/14/2023

SHEET TITLE:
BLOWER SYSTEM

SHEET NUMBER:	REV. #
C-401	
SHEET 30 OF 52 SHEETS	

P:\consulting\projects\22\22-517-00011.NTUA-HPP Kayenta WWF\CAD\C-401_BLOWER SYSTEM.dwg

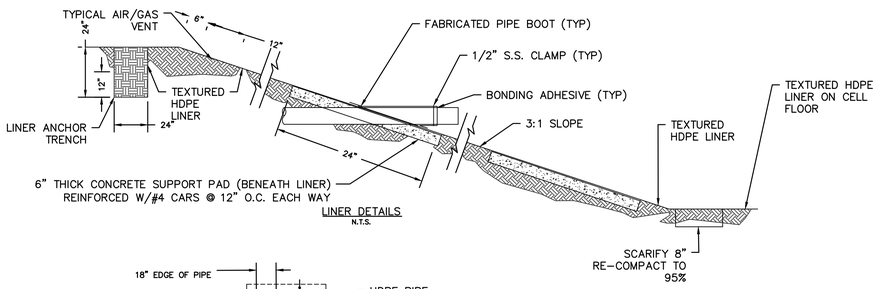

LINER DETAILS
N.T.S.

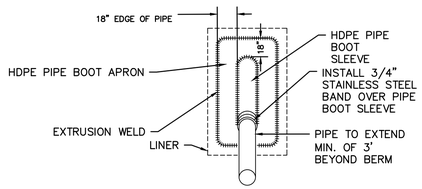

PIPE PENETRATION BOOT NOTES:

1. CONCRETE SURFACES TO BE STEEL TROWEL FINISHED WITH ROUNDED AND SMOOTHED EDGES
2. MINIMUM CONCRETE STRENGTH 4000 PSI – ALL CONCRETE WORK SHALL CONFORM TO TP–02
3. COAT EXPOSED PVC PIPE WITH WHITE PAINT
4. CONCRETE PAD FOR DRAIN PIPE SHALL BE TERMINATED AT THE BOTTOM OF THE LAGOON

1 PIPE PENETRATION BOOT DETAIL
NOT TO SCALE

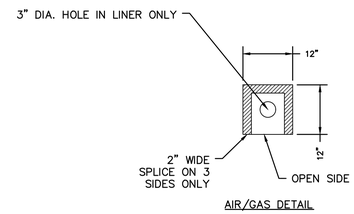

AIR/GAS DETAIL

NOTE:
RECOMMENDED SPACING IS ONE (1) VENT EVERY 100 LF CENTERED OVER 3" DIA HOLE.

3 AIR/GAS DETAIL
NOT TO SCALE

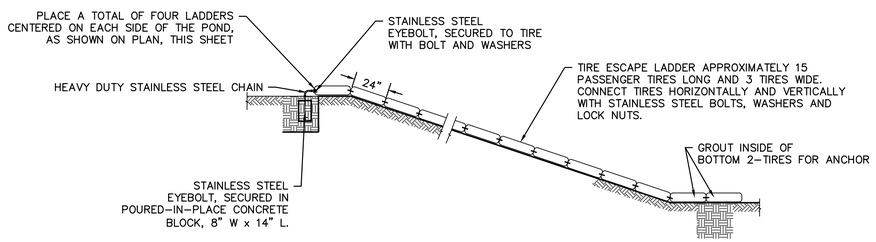

LINER DETAIL
N.T.S.

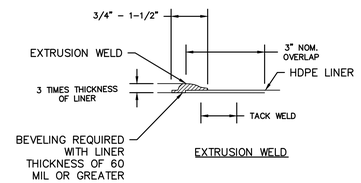

EXTRUSION WELD

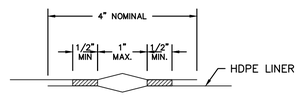

HDPE FIELD SPLICE

LINER DETAILS
N.T.S.

4 HDPE FIELD SPLICE
NOT TO SCALE

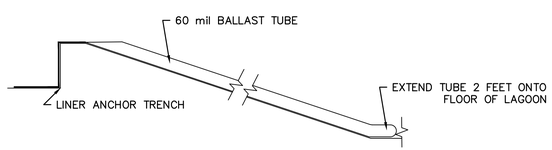

NOTES:
1. BALLAST TUBES ARE 8" IN DIAMETER AND FILLED WITH EITHER SAND OR PEA GRAVEL. TUBES ARE ANCHORED IN THE LINER ANCHOR TRENCH AND SHALL EXTEND TWO FEET ONTO THE LAGOON FLOOR.
2. PLACE TUBES IN THE CORNERS OF THE POND.

2 BALLAST TUBE DETAIL
NOT TO SCALE

wsp
4221 BALLOON PARK RD NE
ALBUQUERQUE, NM 87109
TEL: (505) 821-1801

W. DANIEL BOIVIN
NEW MEXICO
12933
PROFESSIONAL ENGINEER
07/14/2023

FINAL

PROJECT:
KAYENTA WWTP
CFID
POND SYSTEM
FINAL DESIGN

NAVAJO TRIBAL UTILITY AUTHORITY
PO BOX 170
FT. DEFIANCE, AZ 86504

WSP PROJECT No:
2151700011

REVISIONS			
NO.	DATE	BY	APPROVED

DESIGNED BY:	WSP – BM
DRAWN BY:	WSP – AO
CHECKED BY:	WSP – BM
APPROVED BY:	WSP – BM
DATE:	07/14/2023

SHEET TITLE:
HDPE LINER DETAILS

SHEET NUMBER:	REV. #
C-402	
SHEET 31 OF 52 SHEETS	

P:\consulting\projects\22\22-517-00011.NTUA-HPP Kayenta WWF\CAD\C-402_HDPE LINER DETAILS.dwg

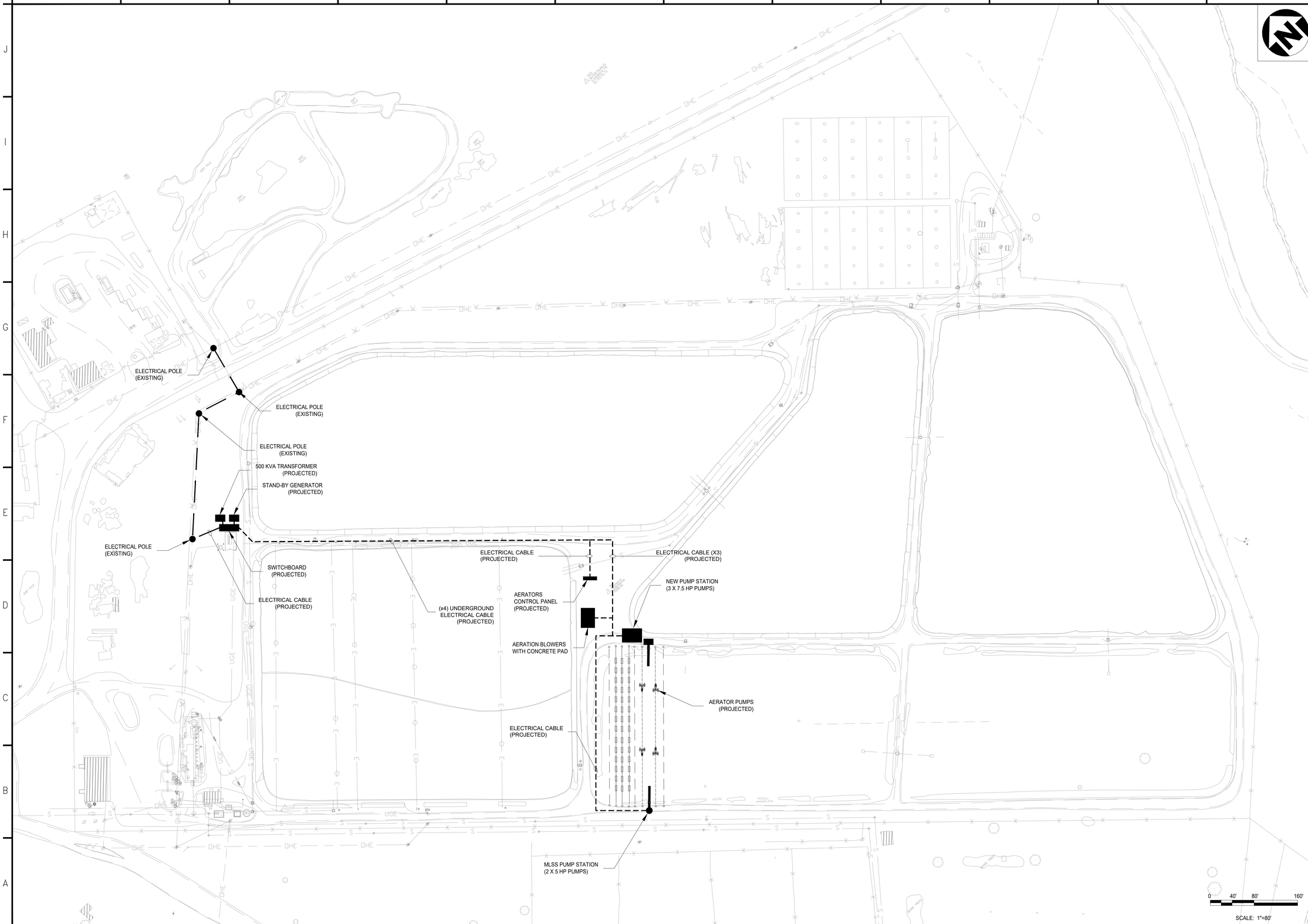

\\ussicfs002\Users\SAlvarado\WWTP NTUA\High Performance\Kayenta\10-GEN-E-AAAA.dwg

wsp

4221 BALLOON PARK RD NE
ALBUQUERQUE, NM 87109

JEFFREY L JORGENSEN
NEW MEXICO
19288
PROFESSIONAL ENGINEER
06/28/23

PROJECT:
KAYENTA WWTP
CFID
POND SYSTEM
FINAL DESIGN

NAVAJO TRIBAL UTILITY AUTHORITY

PO BOX 170
FT. DEFIANCE, AZ 86504
WSP PROJECT No:
2151700051

REVISIONS

NO.	DATE	DESCRIPTION

DESIGNED BY:	SA
DRAWN BY:	SA
CHECKED BY:	JJ
DATE:	26MAY2023

SHEET TITLE:
ELECTRICAL SITE LAYOUT DRAWING

SHEET NUMBER:	REV. #
E-100	

SHEET 32 OF 52

LOAD DESCRIPTION	NON MOTOR LOAD KVA	NON MOTOR LOAD AMPS	MOTOR HP	MOTOR AMPS	DEMAND FACTOR	DEMAND SERVICE ENTRANCE AMPS	CONNECTED SERVICE ENTRANCE AMPS	POWER SOURCE
Blower #1			100	124.00	1.00	124.00	124.00	SB-001
Blower #2			100	124.00	1.00	124.00	124.00	SB-001
Blower #3			100	124.00	1.00	124.00	124.00	SB-001
MLSS Pump #1			5	7.60	1.00	7.60	7.60	SB-001
MLSS Pump #2			5	7.60	1.00	7.60	7.60	SB-001
New Pump #1			7.5	11.00	1.00	11.00	11.00	SB-001
New Pump #2			7.5	11.00	1.00	11.00	11.00	SB-001
New Pump #3			7.5	11.00	1.00	11.00	11.00	SB-001
XFMR-101	1.5	1.80			1.00	1.80	1.80	SB-001
Aerators Control Panel	104	125.09			1.00	125.09	125.09	SB-001
SERVICE ENTRANCE						547	547	
25% OF LARGEST MOTOR AMPS						31	31	
NEC SERVICE ENTRANCE AMPS						**578**	**578**	
UTILITY SERVICE ENTRANCE AMPS REQUESTED						600	600	

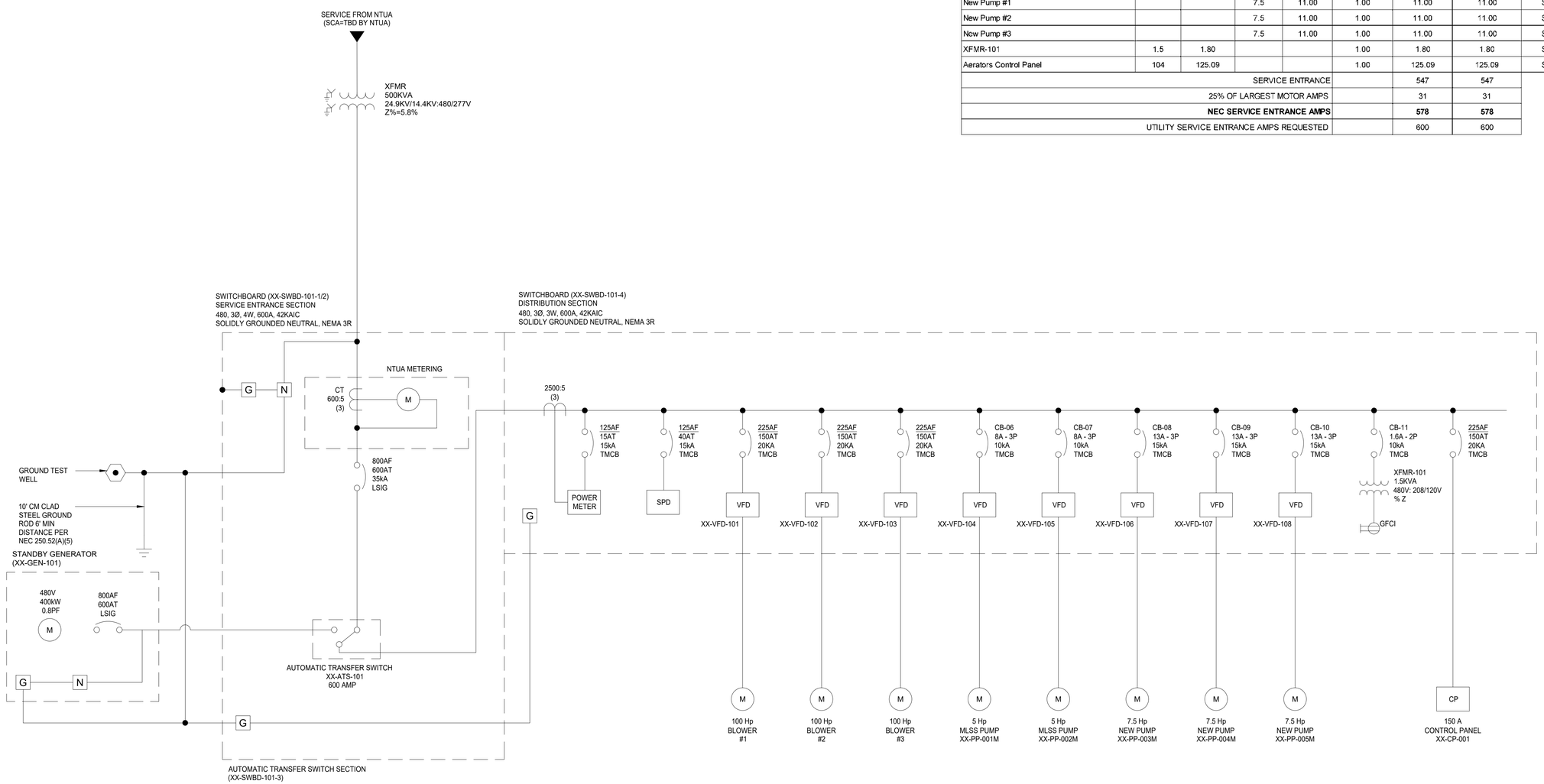

wsp

4221 BALLOON PARK RD NE
ALBUQUERQUE, NM 87109

JEFFREY L. JORGENSEN
NEW MEXICO
19288
PROFESSIONAL ENGINEER
06/28/23

PROJECT:
KAYENTA WWTP
CFID
POND SYSTEM
FINAL DESIGN

NAVAJO TRIBAL UTILITY AUTHORITY

PO BOX 170
FT. DEFIANCE, AZ 86504
WSP PROJECT No:
2151700051

REVISIONS

NO.	DATE	DESCRIPTION

DESIGNED BY:	SA
DRAWN BY:	JJ
CHECKED BY:	JJ
DATE:	26MAY2023

SHEET TITLE:
SWITCHBOARD SINGLE LINE DIAGRAM

SHEET NUMBER:	REV. #
E-101	

SHEET 33 OF 52

\\ussicfs002\Users\SAlvarado\WWTP NTUA\High Performance\Kayenta\10-GEN-E-XXXX.dwg

LOAD DESCRIPTION	NON MOTOR LOAD KVA	NON MOTOR LOAD AMPS	MOTOR HP	MOTOR AMPS	DEMAND FACTOR	DEMAND SERVICE ENTRANCE AMPS	CONNECTED SERVICE ENTRANCE AMPS	POWER SOURCE
Aerator #1			15	21.00	1.00	21.00	21.00	PP-001
Aerator #2			15	21.00	1.00	21.00	21.00	PP-001
Aerator #3			15	21.00	1.00	21.00	21.00	PP-001
Aerator #4			15	21.00	1.00	21.00	21.00	PP-001
Decanter Valve	16	19.25			1.00	19.25	19.25	PP-001
Pinch Valve	16	19.25			1.00	19.25	19.25	PP-001
XFMR-001	2	2.41			1.00	2.41	2.41	PP-001
SERVICE ENTRANCE						125	125	
25% OF LARGEST MOTOR AMPS						5	5	
NEC SERVICE ENTRANCE AMPS						**130**	**130**	
UTILITY SERVICE ENTRANCE AMPS REQUESTED						150	150	

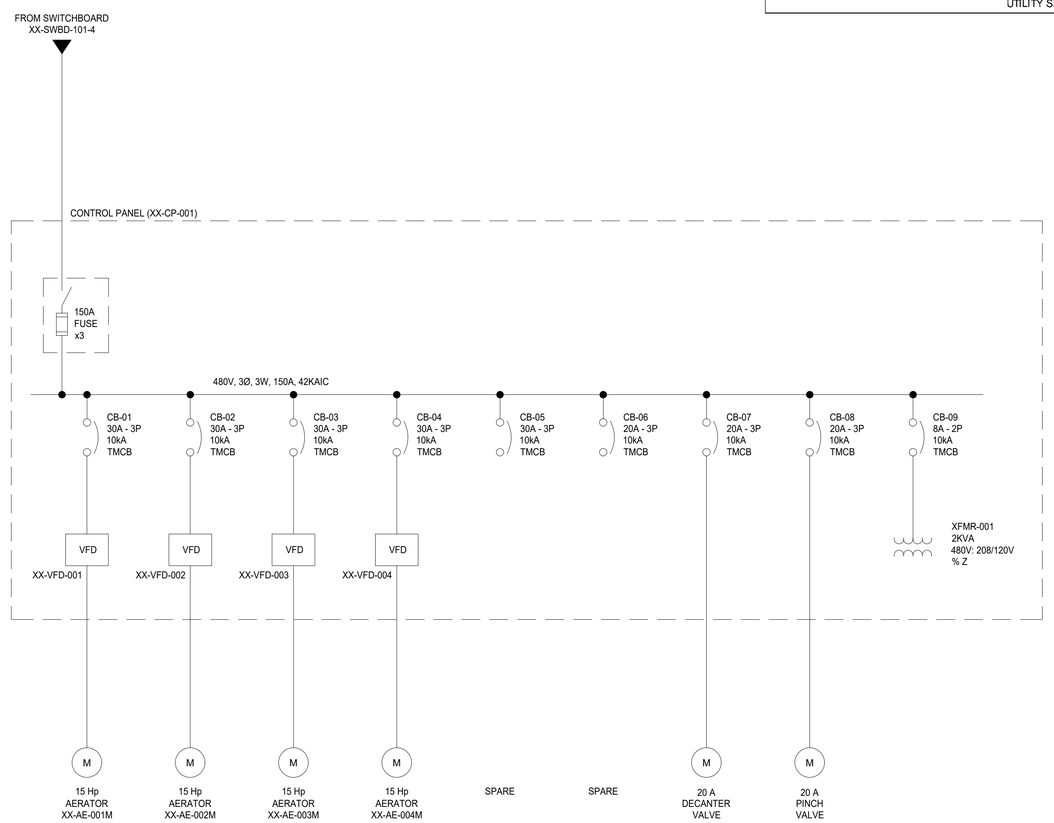

wsp

4221 BALLOON PARK RD NE
ALBUQUERQUE, NM 87109

JEFFREY L JORGENSEN
NEW MEXICO
19288
PROFESSIONAL ENGINEER
06/28/23

PROJECT:
KAYENTA WWTP
CFID
POND SYSTEM
FINAL DESIGN

NAVAJO TRIBAL UTILITY AUTHORITY

PO BOX 170
FT. DEFIANCE, AZ 86504
WSP PROJECT No:
2151700051

REVISIONS

NO.	DATE	DESCRIPTION

DESIGNED BY:	SA
DRAWN BY:	JJ
CHECKED BY:	JJ
DATE:	26MAY2023

SHEET TITLE:
CONTROL PANEL SINGLE LINE DIAGRAM

SHEET NUMBER:	REV. #
E-102	
SHEET 34 OF 52	

\\ussicfs002\Users\SAlvarado\WWTP NTUA\High Performance\Kayenta\10-GEN-E-XXXX.dwg

NAVAJO TRIVAL UTILITY AUTHORITY
HIGH-PERFORMANCE POND SYSTEM - KAYENTA

FOR: N.T.U.A.
LOCATION: KAYENTA, AZ
PROJECT No.: 2151700011
DRAWING PKG No.: 23-046_KYNTA

TABLE OF CONTENTS

DRAWING NO.	SEC	DRAWING TITLE
K-A01	A	TITLE PAGE
K-A02	A	PROCESS FLOW SYMBOLS & NOTES PG. 1 - P & ID
K-A03	A	PROCESS FLOW SYMBOLS & NOTES PG. 2 - P & ID
K-A04	A	PROCESS FLOW SYMBOLS & NOTES PG. 3 - P & ID
K-A05	A	PROCESS FLOW SYMBOLS & NOTES PG. 4 - P & ID
K-C01	C	AREA MAP AND CONSTRUCTION NOTES
K-C02	C	AERATOR PUMP PLACEMENT DIAGRAM
K-D01	D	NETWORK AND CONDUIT DIAGRAM: PANEL AND FIELD
K-E00	E	480VAC THREE-LINE DIAGRAM
K-E01	E	480VAC THREE-LINE DIAGRAM
K-E02	E	480VAC THREE-LINE DIAGRAM
K-F01	F	120VAC SCHEMATIC
K-G01	G	24VDC SCHEMATIC
K-H00	H	PLC POWER AND COMMUNICATION - RACK 1 MODULE 00
K-H01	H	I/O SCHEMATIC PLC RACK 1 MODULES 01 & 02
K-H02	H	I/O SCHEMATIC PLC RACK 1 MODULE 03
K-H03	H	I/O SCHEMATIC PLC RACK 1 MODULE 04
K-H04	H	I/O SCHEMATIC PLC RACK 1 MODULE 05
K-M01	M	ASSEMBLY DRAWING ENCLOSURE
K-M02	M	ASSEMBLY DRAWING BACKPLATE
K-M03	M	BILL OF MATERIALS

8519 JEFFERSON NE
ALBUQUERQUE, NM 87113
TEL: (505) 821-1801

JEFFREY L. JORGENSEN
NEW MEXICO
19288
03/21/23
PROFESSIONAL ENGINEER

PROJECT:
KAYENTA WWTP
HIGH-PERFORMANCE
POND SYSTEM
FINAL DESIGN

NAVAJO TRIBAL UTILITY AUTHORITY
PO BOX 170
FT. DEFIANCE, AZ 86504
WSP PROJECT No:
2151700011

REVISIONS

NO.	DATE	BY	APPROVED
RCA	20230324	RSB	PP

DESIGNED BY:	RSB
DRAWN BY:	RSB
CHECKED BY:	PP
APPROVED BY:	PP
DATE:	20230324

SHEET TITLE:
TITLE PAGE

K-A01

SHEET NUMBER:	REV. #
K-A01	RCA

SHEET 1 OF 21 SHEETS

C:\I&C Solutions\2023 CAD\23-031 to 23-060\23-045 NTUA\KAYENTA\K-A01.dwg

3/21/2023 3:21:32 AM, PDF CREATED

ELECTRICAL SYMBOLS LEGEND

SYMBOL	DESCRIPTION
	EXISTING
X X X	REMOVE
	NEW WORK
	HIDDEN OR BURIED
	HOMERUN CONDUIT
	GROUND
	PHASE
	SWITCHED
	NEUTRAL
	ISOLATED GROUND
	FLEXIBLE CONDUIT
	CONDUIT TURNING DOWN
	CONDUIT TURNING UP
	CONDUIT UP AND DOWN
	CONDUIT SEAL
	CONDUIT CAP
480V 600A	BUSWAY WITH DESCRIPTION
G	GROUNDING CONDUCTOR
6 X 24	CABLE TRAY WITH DESCRIPTION
J	CEILING JUNCTION BOX
J	WALL JUNCTION BOX
	DUPLEX RECEPTACLE OUTLET
	SINGLE RECEPTACLE OUTLET
	DOUBLE DUPLEX RECEPTACLE OUTLET
GFCI WP	GROUND FAULT CIRCUIT INTERRUPTER DUPLEX OUTLET WITH WEATHERPROOF COVER
	SPLIT WIRED DUPLEX RECEPTACLE
IG	DUPLEX ISOLATED GROUND
A	SPECIAL PURPOSE OUTLET – USE SUBSCRIPT TO IDENTIFY TYPE IN SPECS
A	FLOOR RECEPTACLE OUTLET USE SUBSCRIPT TO IDENTIFY TYPE IN SPECS
	RECEPTACLE RACEWAY
$a	SINGLE POLE SWITCH – USE SUBSCRIPT TO DESIGNATE CONTROL OF PARTICULAR OUTLETS
$2	DOUBLE POLE SWITCH
$3	THREE-WAY SWITCH
$4	FOUR-WAY SWITCH
$WP	WEATHERPROOF SWITCH
$K	KEY OPERATED SWITCH
600	DIMMER SWITCH – NUMBER INDICATES WATTAGE
M	OCCUPANCY SENSING SWITCH
P	PHOTOCELL
6 30	REMOTE CONTROL SWITCH 6 POLE, 30 AMPS
A 1, b	FLUORESCENT LUMINAIRE A=FIXTURE TYPE 1=CIRCUIT NUMBER b=SWITCH CONTROLLING FIXTURE
	FLUORESCENT STRIP LUMINAIRE
	WALL MOUNTED FLUORESCENT LUMINAIRE
	CEILING MOUNTED LUMINAIRE
	WALL MOUNTED LUMINAIRE
	EMERGENCY LUMINAIRE
	LIGHT POLE WITH LUMINAIRE

SYMBOL	DESCRIPTION
	EMERGENCY LIGHTING UNIT
	CEILING MOUNTED EXIT SIGN – ARROW AS INDICATED
	TWO FACED EXIT SIGN
H	WALL MOUNTED EXIT SIGN
	SWITCHBOARD, POWER PANELBOARD
LP–XX	LIGHTING PANELBOARD
T	TRANSFORMER
30	NON–FUSIBLE SAFETY SWITCH (NUMBER INDICATES SWITCH SIZE)
F 40/60	FUSED SAFETY SWITCH (NUMBERS INDICATE FUSE/SWITCH SIZES)
20	COMBINATION MAGNETIC STARTER AND CIRCUIT BREAKER 2 – INDICATES NEMA STARTER SIZE 20 – INDICATES CIRCUIT BREAKER TRIP
	MAGNETIC STARTER
ASD	ADJUSTABLE SPEED DRIVE
3	MOTOR (NUMBER INDICATES HP)
	BELL
H	HORN "H" OR SIREN "S"
	BUZZER
	PUSHBUTTON
F	MANUAL PULL STATION
V	FIRE ALARM HORN (V=VISUAL SIGNAL)
P	PHOTOELECTRIC SMOKE DETECTOR
I	IONIZATION SMOKE DETECTOR
T	THERMAL DETECTOR
P D	DUCT SMOKE DETECTOR (PHOTOELECTRIC)
DH	MAGNETIC DOOR HOLDER
PS	PRESSURE SWITCH
FS	FLOW SWITCH
S	VALVE SUPERVISORY SWITCH
FACP	FIRE ALARM CONTROL PANEL
F	FIRE ALARM RACEWAY
S	CEILING SPEAKER
S	WALL SPEAKER
	TELECOMMUNICATIONS OUTLET
	FLOOR MOUNTED TELECOMMUNICATIONS OUTLET
	INTERCOM OUTLET
T	TELECOMMUNICATIONS RACEWAY
D	PROTECTED TRANSMISSION SYSTEM (PTS) DATA TERMINAL CONNECTION
TV	TELEVISION OUTLET
CR	CARD READER
ES	ELECTRIC DOOR STRIKE
DC	DOOR CONTACTS
RAP	REMOTE ACCESS PANEL
HG	HAND GEOMETRY UNIT
MD	MOTION DETECTOR
C	CLOSED CIRCUIT TV CAMERA

SYMBOL	DESCRIPTION
100/3	MEDIUM VOLTAGE DISCONNECT SWITCH
600	MEDIUM VOLTAGE DRAWOUT CIRCUIT BREAKER
480V 500 KVA 208Y/120V	TRANSFORMER (DELTA–WYE CONN.)
	SHIELDED TRANSFORMER
1000/1600	DRAWOUT CIRCUIT BREAKER (TRIP/FRAME)
300/400 GFI	CIRCUIT BREAKER (TRIP/FRAME) WITH GROUND FAULT INTERRUPTER
7/MCP	MOTOR CIRCUIT PROTECTOR
30/MCP	MOTOR CONTROL CENTER STARTER UNIT
	FUSE
	GROUND
G	GENERATOR
3000/5 3	CURRENT TRANSFORMER (NUMBERS INDICATE RATIO AND QUANTITY)
3	POTENTIAL TRANSFORMER (NUMBER INDICATES QUANTITY)
AS	AMMETER SWITCH
VS	VOLTMETER SWITCH
V	VOLTMETER
A	AMMETER
KW	KILOWATT METER
N E L	TRANSFER SWITCH
K1	KEY INTERLOCK #1
	BATTERY
	NORMALLY CLOSED CONTACT
	NORMALLY OPEN CONTACT
	PROTECTIVE RELAY, SOLENOID COIL
	THERMAL OVERLOAD
	CONNECTION
	CROSS, NO CONNECTION
	SURGE ARRESTOR
TVSS	TRANSIENT VOLTAGE SURGE SUPPRESSOR
	CAPACITOR
CR1	CONTROL RELAY #1
	BUS PLUG CIRCUIT BREAKER
T	THERMOSTAT
1	KEYED NOTE DESIGNATION
3	ELECTRICAL EQUIPMENT DESIGNATION (SEE SCHEDULE)
5	MECHANICAL EQUIPMENT DESIGNATION (SEE SCHEDULE)
7	NAMEPLATE DESIGNATION (SEE SCHEDULE)
WP	WEATHERPROOF
AFF	ABOVE FINISH FLOOR

GENERAL ELECTRICAL NOTES

(NOT ALL SYMBOLS & NOTES WILL APPLY TO THIS PROJECT)

1. PERFORM INSTALLATION IN ACCORDANCE WITH THE CURRENT EDITION OF THE NATIONAL ELECTRICAL CODE (NEC), THE OCCUPATIONAL SAFETY AND HEALTH ACT (OSHA), AND APPLICABLE DOE ORDERS. EQUIPMENT SHALL BE LISTED BY A NATIONALLY RECOGNIZED TESTING LABORATORY (NRTL).
2. PROVIDE AND MAINTAIN A CLEAR WORKING SPACE ABOUT ELECTRIC EQUIPMENT (SWITCHBOARDS,PANELBOARDS, ETC.) IN ACCORDANCE WITH NEC ARTICLES 110.26 AND 110.34.
3. USE 600 VAC CIRCUIT BREAKERS IN 480V AND 480Y/277V SWITCHBOARDS, PANELBOARDS AND MOTOR CONTROL CENTERS.
4. PROVIDE CIRCUIT BREAKERS WITH UL LISTED INTERRUPTING RATING (RMS SYMMETRICAL AMPERES) GREATER THAN THE AVAILABLE FAULT CURRENT SHOWN ON THE ELECTRICAL ONE–LINE DIAGRAM.
5. PROVIDE PADLOCKING PROVISIONS FOR EACH TWO– AND THREE–POLE CIRCUIT BREAKER.
6. BOND RACEWAYS AND THE FRAMES AND ENCLOSURES OF MOTORS, BREAKERS, SWITCHES, AND OTHER ELECTRICAL EQUIPMENT TO THE BUILDING GROUNDING SYSTEM. INSTALL AN INSULATED EQUIPMENT GROUND CONDUCTOR IN EACH RACEWAY OR CONDUIT. SIZE EQUIPMENT GROUND CONDUCTOR IN ACCORDANCE WITH NEC TABLE 250.122.
7. IDENTIFY NEW BRANCH CIRCUITS AT THE PANEL AND AT THE LOAD OUTLET, RECEPTACLE AND SWITCH. IDENTIFY THE PURPOSE OF INDIVIDUAL CIRCUIT BREAKERS, SAFETY SWITCHES AND MOTOR STARTERS BY MEANS OF NAMEPLATES AS INDICATED.
8. ROUTE CONDUITS TO SUIT EQUIPMENT AND BUILDING STRUCTURE. LIMIT THE USE OF ELECTRICAL METALLIC TUBING (EMT) TO AREAS WHERE IT WILL NOT BE SUBJECT TO PHYSICAL DAMAGE OR CORROSION. USE INTERMEDIATE METAL CONDUIT (IMC) OR RIGID GALVANIZED STEEL CONDUIT (RGS) FOR WORK EMBEDDED IN CONCRETE OR EXPOSED TO PHYSICAL DAMAGE. USE MINIMUM 3/4 INCH CONDUIT EXCEPT AS FOLLOWS: 1/2" CONDUIT MAY BE USED FOR 20 AMP GENERAL LIGHT AND POWER CIRCUITS AND FOR CONTROL CIRCUITS; 3/8" FLEXIBLE METAL CONDUIT MAY BE USED TO CONNECT LIGHT FIXTURES IN SUSPENDED CEILINGS. USE LIQUID–TIGHT FLEXIBLE METAL CONDUIT FOR FLEXIBLE CONNECTIONS TO EQUIPMENT IN MECHANICAL ROOMS OR OUTDOORS.
9. SEAL AROUND CONDUIT PENETRATIONS THROUGH INTERIOR WALLS AND FLOORS SEPARATING AREAS TO RESTORE ORIGINAL FIRE RATING; USE A UL CLASSIFIED FIRE SEALANT. SEAL PENETRATIONS THROUGH ROOF AND EXTERIOR WALLS TO MAKE WATERPROOF. REQUEST INSPECTION OF FIRE SEALS BY ELECTRICAL INSPECTOR FROM AUTHORITY HAVING JURISDICTION BEFORE AND AFTER PLACEMENT OF FIRE SEAL MATERIALS.
10. USE 12 AWG OR LARGER CONDUCTORS FOR POWER WIRING. USE 14 AWG STRANDED CONDUCTORS FOR CONTROL WIRING UNLESS OTHERWISE SPECIFIED OR SHOWN ON THE DRAWINGS.
11. USE ONLY COPPER CONDUCTORS ON CIRCUITS 600V AND LESS. CONDUCTORS 10 AWG AND SMALLER SHALL BE SOLID AND 8 AWG AND LARGER AWG SHALL BE STRANDED. PROVIDE TYPE THHN/THWN WIRE INSULATION; XHHW INSULATION MAY BE USED FOR 1 AWG AND LARGER.
12. USE THE FOLLOWING CONDUCTOR COLOR CODES:

	208Y/120 VOLT	480Y/277 VOLT
PHASE A	BLACK	BROWN
PHASE B	RED	ORANGE
PHASE C	BLUE	YELLOW
NEUTRAL	WHITE	GRAY
EQUIP. GROUND	GREEN	GREEN

ISOLATED GROUND SHALL BE GREEN WITH YELLOW TRACER.

13. ARRANGE CONNECTIONS FOR SINGLE PHASE CIRCUITS TO ACHIEVE THREE PHASE LOAD BALANCE WITHIN 20% OF THE AVERAGE PHASE LOAD CURRENT. UNGROUNDED CONDUCTORS USING A COMMON NEUTRAL MUST ORIGINATE FROM DIFFERENT PHASES.
14. INSTALL OUTDOOR EQUIPMENT TO BE WEATHERPROOF AND TO EXCLUDE BIRDS AND RODENTS WITH MAXIMUM 1/2" DIAMETER UNPROTECTED OPENINGS IN ENCLOSURES.
15. PROVIDE LIGHTNING PROTECTION IN ACCORDANCE WITH NFPA 780. PROVIDE MATERIAL THAT IS UL LABELED FOR LIGHTNING PROTECTION SERVICE. THE LIGHTNING PROTECTION SYSTEM DESIGN AND INSTALLATION SHALL FOLLOW THAT SHOWN ON THE DRAWINGS.
16. TEST CONDUCTORS FOR CONTINUITY AND FREEDOM FROM SHORTS AND UNINTENTIONAL GROUNDS.
17. ELECTRICAL EQUIPMENT SPECIFIED IN THIS DOCUMENT SHALL BE ACCEPTANCE TESTED AND INSPECTED IN ACCORDANCE WITH UL.
18. ELECTRICAL MATERIALS AND CONSTRUCTION SHALL CONFORM TO OWNERS/PROJECT MANAGERS STANDARD CONSTRUCTION SPECIFICATIONS WHERE APPLICABLE.
19. DISPOSE OF ITEMS REMOVED AS DIRECTED BY THE OWNER/PROJECT CONSTRUCTION INSPECTOR.
20. REPAIR AREAS DAMAGED DURING CONSTRUCTION TO MATCH ADJACENT AREAS WITH RESPECT TO BOTH COLOR AND FINISH.
21. KEEP JOB SITE IN AN ORDERLY CONDITION AND AT PROJECT COMPLETION, REMOVE ALL WASTE. LEAVE THE JOB SITE IN A CONDITION ACCEPTABLE TO THE OWNER/PROJECT CONSTRUCTION INSPECTOR.
22. IF A CONFLICT ARISES BETWEEN THE FIELD CONDITIONS AND THESE GENERAL ELECTRICAL REQUIREMENTS, CONTACT THE OWNER/PROJECT LEADER FOR DIRECTIONS.
23. TIE–INS TO EXISTING POWER SYSTEMS WILL BE PERFORMED BY THE PROJECT SUPPORT SERVICES SUB–CONTRACTOR.

DRAWING NOTES

1. DRAWINGS ARE MEANT TO BE A REPRESENTATION ONLY, DEVICES MAY LOOK DIFFERENT THAN WHAT WE HAVE SHOWN.
2. REFER TO PRODUCT SPECIFICATIONS FOR EXACT DIMENSIONS OF ENCLOSURE, BACK PANEL & ALL DEVICES DRAWN IN THESE DRAWINGS.

NOTING SYMBOLS & DESIGNATIONS

(#) CORRESPONDS TO A BILL OF MATERIALS #

(55) CORRESPONDS TO A KEYED NOTE #

X / X–X — TITLE NOTATION & SEE DETAIL SYMBOL
(INDICATES DETAIL DESIGNATION)
(INDICATES SHEET NUMBER)

wsp
8519 JEFFERSON NE
ALBUQUERQUE, NM 87113
TEL: (505) 821-1801

JEFFREY L JORGENSEN NEW MEXICO 19288 PROFESSIONAL ENGINEER 03/21/23

PROJECT:
KAYENTA WWTP HIGH-PERFORMANCE POND SYSTEM FINAL DESIGN

NAVAJO TRIBAL UTILITY AUTHORITY
PO BOX 170
FT. DEFIANCE, AZ 86504

WSP PROJECT No: 2151700011

REVISIONS

NO.	DATE	BY	APPROVED
RCA	20230324	RSB	PP

DESIGNED BY:	RSB
DRAWN BY:	RSB
CHECKED BY:	PP
APPROVED BY:	PP
DATE:	20230324

SHEET TITLE:
PROCESS FLOW SYMBOLS & NOTES PG. 1 - P & ID

K-A02

SHEET NUMBER:	REV. #
K-A02	RCA

SHEET 2 OF 21 SHEETS

C:\I&C Solutions\2023 CAD\23-031 to 23-060\23-045 NTUA\KAYENTA\K-A02.dwg

3/21/2023 3:21:37 AM, PDF CREATED

SIGNAGE & LABELS KEY

1 — 120 VAC POWER	1A — 120 VAC POWER	1B — 120 VAC POWER
2 — 120 VAC SURGE PROTECTOR	2A — 120 VAC SURGE PROTECTOR	2B — 120 VAC SURGE PROTECTOR
3 — POWER SUPPLY	3A — POWER SUPPLY	3B — POWER SUPPLY
4 — TB-DI 1	4A — TB-DI 2	4B — TB-DI 3
5 — TB-DO 1	5A — TB-DO 2	5B — TB-DO 3
6 — TB-AI 1	6A — TB-AI 2	6B — TB-AI 3
7 — TB-AO 1	7A — TB-AO 2	7B — TB-AO 3

8 — XXX PANEL NAME

9 — SITE NAME XXX

10 — WARNING, THERE MAY BE VOLTAGE IN THIS PANEL FROM MULTIPLE SOURCES

LINE TYPES

SYMBOL	LINE TYPE	DESCRIPTION
	CONTINUOUS	PRIMARY PROCESS FLOW LINE
	CONTINUOUS	SECONDARY PROCESS FLOW LINE
	CONTINUOUS	INSTRUMENT SUPPLY OR CONNECTION TO PROCESS
	CONTINUOUS	UNDEFINED SIGNAL
	CONTINUOUS	PNEUMATIC SIGNAL *
	HIDDENX2	ELECTRIC SIGNAL
	CONTINUOUS	HYDRAULIC SIGNAL
	CONTINUOUS	CAPILLARY TUBE
	CONTINUOUS	ELECTROMAGNETIC OR SONIC SIGNAL** (GUIDED)
	CONTINUOUS	ELECTROMAGNETIC OR SONIC SIGNAL** (NOT GUIDED)
	CONTINUOUS	INTERNAL SYSTEM LINK (SOFTWARE OR DATA LINK
	CONTINUOUS	MECHANICAL LINK
OPTIONAL BINARY (ON-OFF) SYMBOLS		
	CONTINUOUS	PNEUMATIC BINARY SIGNAL
	DASHED2	ELECTRIC BINARY SIGNAL
—E—E—	CONTINUOUS	ELECTRICAL HEAT TRACING
—S—S—	CONTINUOUS/DASHED2	STEAM HEAT TRACING
	DASHED2	BURIED LINES
	PHANTOM	EXISTING
XX	CENTER	FP – FLOOR PENETRATION RP – ROOF PENETRATION WP – WALL PENETRATION SB – SYSTEM BREAK

NOTES:
"OR" MEANS USER CHOICE. CONSISTENCY IS RECOMMENDED.

* THE PNEUMATIC SIGNAL SYMBOL APPLIES TO A SIGNAL USING ANY GAS AS THE * SIGNAL MEDIUM. IF GAS OTHER THAN AIR IS USED, THE GAS MAY BE IDENTIFIED BY A NOTE ON THE SIGNAL SYMBOL OR OTHERWISE.

* ELECTROMECHANIC PHENOMENA INCLUDE HEAT, RADIO WAVES, NUCLEAR RADIATION, ** AND LIGHT.

PROCESS FLOW DIAGRAMS AND P&ID SYMBOLS

(GENERAL INSTRUMENT OR FUNCTION SYMBOLS) (NOT ALL SYMBOLS & NOTES WILL APPLY TO THIS PROJECT)

ACRONYMS

EQUIPMENT

AHU – AIR HANDLING UNIT
ASV – AIR SWITCH VALVE
CA – AIR COMPRESSOR
CAE – COOLER, AIR EVAPORATIVE
D – DAMPER
DAD – DESICCANT AIR DRYER
DAMD – DUCT AIR MONITOR DEVICE
ES – EXHAUST STACK
FAB – FILTER AIR BOX
FANE – FAN EVALUATOR
FAR – FILTER AIR REPLACEABLE
FC – FAN CIRCULATING
FD – FIRE DAMPER
FE – FAN EXHAUST
FRA – FAN, RETURN AIR
FRL – FILTER AIR ROLL
FS – FAN SUPPLY
HEPA – HIGH EFFICIENCY PARTICULATE AIR FILTER
HX – HEAT EXCHANGER
MT – MOISTURE TRAP
OIM – OPERATOR INTERFACE MODULE
SST – SYSTEM STATIC TOTALIZER
TCA – TANK COMPRESSED AIR
TK – TANK
T – TRAP
V – VALVE
VFD – VARIABLE FREQUENCY DRIVE/MOTOR CONTROLLER
YS – PLC CONTROL OUTPUT

MINOR EQUIPMENT

OPEN DRAIN ANNOTATIONS
RD – RADIOACTIVE DRAIN TO DRAIN HEADER
ND – NONRADIOACTIVE DRAIN
AW – ACID WASTE
NW – NORMAL WASTE
OW – OIL WASTE
SW – SANITARY WASTE

P

TYPICAL VALVE ANNOTATIONS
FO – FAIL OPEN
FC – FAIL CLOSED
FL – FAIL LOCKED (POSITION DOES NOT CHANGE)
FI – FAIL INDETERMINATE
FAI – FAIL AS IS
NO – NORMALLY OPEN
NC – NORMALLY CLOSED
LO – LOCKED OPEN
LC – LOCKED CLOSED

MISCELLANEOUS ACRONYMS

WP – WALL PENETRATION
FP – FLOOR PENETRATION
RP – ROOF PENETRATION
AO – ANALOG OUTPUT
AI – ANALOG INPUT
DI – DIGITAL INPUT
RO – RELAY OUTPUT

SYMBOL / DESCRIPTION

SYMBOL	DESCRIPTION
X	P =PURGE OR FLUSHING DEVICE R =RESET FOR LATCH-TYPE ACTUATOR I =UNDEFINED INTERLOCK LOGIC
X	S=SOLENOID D=DIGITAL P=PILOT T=TRAP M=MAGNETIC FLOWMETER SP=SET POINT
√	ROOT EXTRACTION
±	BIAS
X	MULTIPLY
>	HIGH SELECTING
<	LOW SELECTING
>X	HIGH LIMITING
<X	LOW LIMITING
K	PROPORTIONAL
-K	REVERSE PROPORTIONAL
+	SUMMING
÷	DIVIDING
CA-1	EQUIPMENT TAG
X Y-#	PIPE OR WIRE IS CONTINUED ON DRAWING X (INCLUDING SHEET NUMBER), GRID COORDINATE (Y-#); FLOW IS TO THAT DRAWING.
X Y-#	PIPE OR WIRE IS CONTINUED ON DRAWING X (INCLUDING SHEET NUMBER), GRID COORDINATE (Y-#); FLOW IS FROM THAT DRAWING.
X Y-#	PIPE OR WIRE IS CONTINUED ON DRAWING X (INCLUDING SHEET NUMBER), GRID COORDINATE (Y-#); FLOW IS IN BOTH DIRECTIONS

INSTRUMENT/FUNCTION SYMBOLS

	PRIMARY LOCATION NORMALLY ACCESSIBLE TO OPERATOR	FIELD MOUNTED	AUXILIARY LOCATION NORMALLY ACCESSIBLE TO OPERATOR	AUXILIARY LOCATION NORMALLY INACCESSIBLE TO OPERATOR
DISCRETE INSTRUMENTS	J1 J2 J2A	J1 J2 J2A	J1 J2 J2A	J1 J2 J2A
SHARED DISPLAY, SHARED CONTROL	J1 J2 J2A	J1 J2 J2A	J1 J2 J2A	J1 J2 J2A
COMPUTER FUNCTION	J1 J2 J2A	J1 J2 J2A	J1 J2 J2A	J1 J2 J2A
PROGRAMMABLE LOGIC CONTROL	J1 J2 J2A	J1 J2 J2A	J1 J2 J2A	J1 J2 J2A

SYMBOL	DESCRIPTION
	FLOW INDICATOR TO BE USED IN CONJUNCTION WITH P016
J1 J2 J2A J1 J2 J2A	INSTRUMENTS SHARING COMMON HOUSING
J1 J2 J2A	PANEL MOUNTED PATCHBOARD POINT 12

INSTRUMENTATION IDENTIFICATION

TABLE

J-9, J-3, J-4, J-7, J-1, J-2, J-2A, J-8, J-6, J-5

J-1 COMPONENT FUNCTION NUMBER
J-2 COMPONENT SEQUENCE NUMBER
J-2A COMPONENT SEQUENCE # CONT'D
J-3 VENDOR DESIGNATION
J-4 PANEL NUMBER
J-5 APPLICABLE NOTES
J-6 SYSTEM ACRONYM
J-7 ASME TEST SYMBOL FOR TEST ONLY OR TEST PLUS NORMAL USE
J-8 SET-POINT(S)
J-9 FUNCTION (SEE INSTRUMENT/FUNCTION SYMBOLS)

NOTE:
INSTRUMENTATION FUNCTION IDENTIFIERS (J-1) AND FUNCTION SYMBOLS PER ANSI/ISA S5.1.

GENERAL NOTES

XX

wsp
8519 JEFFERSON NE
ALBUQUERQUE, NM 87113
TEL: (505) 821-1801

JEFFREY L JORGENSEN NEW MEXICO 19288 PROFESSIONAL ENGINEER 03/21/23

PROJECT:
KAYENTA WWTP HIGH-PERFORMANCE POND SYSTEM FINAL DESIGN

NAVAJO TRIBAL UTILITY AUTHORITY
PO BOX 170
FT. DEFIANCE, AZ 86504

WSP PROJECT No: 2151700011

REVISIONS

NO.	DATE	BY	APPROVED
RCA	20230324	RSB	PP

DESIGNED BY:	RSB
DRAWN BY:	RSB
CHECKED BY:	PP
APPROVED BY:	PP
DATE:	20230324

SHEET TITLE:
PROCESS FLOW SYMBOLS & NOTES PG. 2 - P & ID

K-A03

SHEET NUMBER:	REV. #
K-A03	RCA

SHEET 3 OF 21 SHEETS

PROCESS FLOW DIAGRAMS AND P&ID SYMBOLS

(GENERAL INSTRUMENT OR FUNCTION SYMBOLS)

(NOT ALL SYMBOLS & NOTES WILL APPLY TO THIS PROJECT)

SYMBOL	DESCRIPTION
	ANGLE VALVE
	BUTTERFLY VALVE
	ROTARY VALVE
	3-WAY VALVE
	4-WAY VALVE
	OS & Y VALVE
	DIAPHRAGM VALVE
	PRESSURE RELIEF
	DIAPHRAGM ACTUATOR
	TWO-WAY VALVE, FAIL CLOSED
	TWO-WAY VALVE, FAIL OPEN
	3-WAY VALVE W/DIAPHRAM ACTUATOR
	4-WAY VALVE W/DIAPHRAM ACTUATOR
	SPRING-OPPOSED SINGLE-ACTING ACTUATOR
	SPRING-OPPOSED DOUBLE-ACTING ACTUATOR
E/H	ELECTROHYDRAULIC ACTUATOR
	HAND ACTUATOR OR HANDWHEEL
	RESTRICTION ORIFICE IN PROCESS LINE
	RESTRICTION ORIFICE DRILLED IN VALVE
	FLOW STRAIGHTING VANE
	DIAPHRAGM PRESSURE-BALANCED
	PRESSURE-REDUCING REGULATOR, SELF-CONTAINED, WITH HANDWHEEL ADJUSTABLE SET POINT
	PRESSURE REDUCING REGULATOR WITH EXTERNAL PRESSURE TAP
	DIFFERENTIAL-PRESSURE-REDUCING REGULATOR WITH INTERNAL AND EXTERNAL TAPS
	BACKPRESSURE REGULATOR, SELF-CONTAINED
	BACKPRESSURE REGULATOR WITH EXTERNAL PRESSURE TAP
PI	PRESSURE-REDUCING REGULATOR WITH INTEGRAL OUTLET PRESSURE RELIEF VALVE, AND OPTIONAL PRESSURE INDICATOR
PI	PRESSURE INDICATOR
	FLOW DIRECTION
	PRESSURE RELIEF OR SAFETY VALVE
	VACUUM RELIEF VALVE
	PRESSURE RELIEF OR SAFETY VALVE, STRAIGHT-THROUGH PATTERN, SPRING- OR WEIGHT-LOADED, OR WITH INTEGRAL PILOT
	RUPTURE DISK OR SAFETY HEAD FOR VACUUM RELIEF

SYMBOL	DESCRIPTION
	RUPTURE DISK OR SAFETY HEAD FOR PRESSURE RELIEF
	PILOT LIGHT X=COLOR R=RED G=GREEN
	FLEX CONNECTION (RUBBER)
	FLEX CONNECTION (STEEL BRAIDED)
	SINGLE PITOT TUBE OR PITOT VENTURI TUBE
	FLOW METER
	FLOW NOZZLE OR VENTURI
	REDUCER
	SCREWED CAP
	PIPE CAP
	HOSE CONNECTION
	FLANGED CONNECTION (PIPING OR EQUIP)
	FLOW ORIFICE FIXED
	STRAINER WITH VALVE
	Y-STRAINER
	COMPRESSED AIR
	DUCTED AIR FLOW FROM SPACE
	CAPPED AIR DUCT
	GATE VALVE (OPEN)
	GATE VALVE (CLOSED)
	GLOBE VALVE (OPEN)
	GLOBE VALVE (CLOSED)
	NEEDLE VALVE (OPEN)
	NEEDLE VALVE (CLOSED)
	PLUG VALVE (OPEN)
	PLUG VALVE (CLOSED)
	BALL VALVE (OPEN)
	BALL VALVE (CLOSED)
	CHECK VALVE
	SPRING CHECK VALVE
	ANGLE VALVE (OPEN)
	ANGLE VALVE (CLOSED)
	SAFETY OR RELIEF VALVE (INLET PORT SHOWN CLOSED)
	THREE-WAY VALVE (CLOSED PORT DARKENED)
	FOUR-WAY VALVE (ARROWS INDICATE FLOW DIRECTION)
	BALL-CHECK VALVE
	DUAL PURGE VALVE
	ALARM VALVE
	AIR INTAKE FILTER
	ALARM
	BUBBLE GAUGE

SYMBOL	DESCRIPTION
	IN-LINE FILTER
	ATMOSPHERIC FILTER
	DOUBLE BASKET STRAINER
	HOSE REEL
	OPEN DRAIN (SHOWN)
XX	XX- DRAIN SYSTEM ANNOTATIONS
	DRAIN (PLAN VIEW)
	CLEANOUT (PLAN VIEW)
	SANITARY VENT
	SILENCER/MUFFLER
	SPACE PENETRATIONS
	FIXED LOUVERS
XX	TRAP XX ANNOTATES FUNCTION
L	LUBRICATOR
	55 GALLON DRUM
	THERMOSTATIC VENT
	SPRINKLER ALARM (WATER MOTOR GONG)
	FLOW ALARM VALVE
	COOLING TOWER
	CHILLER
	HORIZONTAL CENTRIFUGAL PUMP
	CENTRIFUGAL FAN WITH VARIABLE INLET VANES
	BLOWER/CENTRIFUGAL FAN
	ROTARY PUMP
	VERTICAL WET PIT PUMP
	PROGRESSIVE CAVITY PUMP
	VERTICAL SUMP PUMP
	HEATER
	HEAT EXCHANGER

SYMBOL	DESCRIPTION
	AXIAL FAN
	AXIAL FAN WITH VARIABLE INLET VANES
	2-STAGE RECIPROCATING AIR COMPRESSOR
	SINGLE STAGE RECIPROCATING AIR COMPRESSOR
	2-STAGE ROTARY SCREW AIR COMPRESSOR
	RECIPROCATING PUMP
	PRESSURE VESSELS, VERTICAL (SHOWN) OR HORIZONTAL (TANKS, RECEIVERS, SEPARATORS, SUMPS ETC.)
	TANK
A/B	HVAC COIL (A) HW HEATING WATER DX DIRECT EXPANSION CH CHILLED WATER STM STEAM (B) HCL HEATING COIL CCL COOLING COIL
A/B	UNIT HEATER (A) HW HEATING WATER DX DIRECT EXPANSION STM STEAM (B) HCL HEATING COIL
	PRESSURIZED GAS BOTTLE
	DOUBLE CONTAINMENT TANK
H	HUMIDIFIER
	MANUAL BALANCE DAMPER
	MULTI POINT PITOT TUBE ARRAY
NO/NC	DAMPER (NORMALLY OPEN) OR NORMALLY CLOSED
	EVAPORATIVE AIR COOLER
	OPPOSED BLADE DAMPER FOR HVAC EQUIPMENT
	BACKDRAFT DAMPER

SYMBOL	DESCRIPTION
	SINGLE DUCT VARIABLE VOLUME BOX
A/B	WING TYPE FACE AND BYPASS DAMPER (A) HW HEATING WATER DX DIRECT EXPANSION CH CHILLED WATER STM STEAM (B) HCL HEATING COIL CCL COOLING COIL
	COLLECTION BIN
	CYCLONE SEPARATOR
	FLUID RECOVERY PUMP
	DUAL SERVICE HEAT EXCHANGER
	MULTI BLADE DAMPER
	SINGLE BLADE DAMPER
M	MOTOR
	TEST PORT
	PILOT LIGHT
	SEPARATOR
	MIST ELIMINATOR
	HEPA FILTER
	CARBON ABSORBER FILTER
	FILTER
SD	SUCTION DIFFUSER

GENERAL NOTES

XX

wsp

8519 JEFFERSON NE
ALBUQUERQUE, NM 87113
TEL: (505) 821-1801

JEFFREY L. JORGENSEN NEW MEXICO 19288 PROFESSIONAL ENGINEER 03/21/23

PROJECT:
KAYENTA WWTP HIGH-PERFORMANCE POND SYSTEM FINAL DESIGN

NAVAJO TRIBAL UTILITY AUTHORITY
PO BOX 170
FT. DEFIANCE, AZ 86504

WSP PROJECT No: 2151700011

REVISIONS			
NO.	DATE	BY	APPROVED
RCA	20230324	RSB	PP

DESIGNED BY:	RSB
DRAWN BY:	RSB
CHECKED BY:	PP
APPROVED BY:	PP
DATE:	20230324

SHEET TITLE:
PROCESS FLOW SYMBOLS & NOTES PG. 3 - P & ID

K-A04

SHEET NUMBER:	REV. #
K-A04	RCA
SHEET 4 OF 21 SHEETS	

C:\I&C Solutions\2023 CAD\23-031 to 23-060\23-045 NTUA\KAYENTA\K-A04.dwg

3/21/2023 3:21:44 AM, PDF CREATED

VALVE & INSTRUMENTATION FUNCTION IDENTIFIERS (SELECTED)

FIRST-LETTERS	INDICATING MEASURED OR CONTROLLED VARIABLE	CONTROLLERS RECORDING	CONTROLLERS INDICATING	CONTROLLERS BLIND	VALVES	READOUT DEVICE RECORDING	READOUT DEVICE INDICATING	SWITCHES AND * ALARM DEVICES HIGH**	SWITCHES AND * ALARM DEVICES LOW	SWITCHES AND * ALARM DEVICES COMB	TRANSMITTERS RECORDING	TRANSMITTERS INDICATING	TRANSMITTERS BLIND	SOLENOIDS RELAYS COMPUTING DEVICES	PRIMARY ELEMENT	TEST POINT	WELL OR PROBE	VIEWING DEVICE GLASS	SAFETY DEVICE	FINAL ELEMENT
A	ANALYSIS	ARC	AIC	AC		AR	AI	ASH	ASL	ASHL	ART	AIT	AT	AY	AE	AP	AW			AV
B	BURNER/ COMBUSTION	BRC	BIC	BC		BR	BI	BSH	BSL	BSHL	BRT	BIT	BT	BY	BE		BW	BG		BZ
C	CONDUCTIVITY		CIC	CC											CE					
D	USER'S CHOICE																			
E	VOLTAGE	ERC	EIC	EC		ER	EI	ESH	ESL	ESHL	ERT	EIT	ET	EY	EE					EZ
F	FLOW RATE	FRC	FIC	FC	FCV FICV	FR	FI	FSH	FSL	FSHL	FRT	FIT	FT	FY	FE	FP		FG		FV
FQ	FLOW QUANTITY	FQRC	FQIC			FQR	FQI	FQSH	FQSL			FQIT	FQT	FQY	FQE					FQV
FF	FLOW RATIO	FFRC	FFIC	FFC		FFR	FFI	FFSH	FFSL						FE					FFV
G	USER'S CHOICE																			
H	HAND		HIC	HC	HV					HS										HV
I	CURRENT	IRC	IIC			IR	II	ISH	ISL	ISHL	IRT	IIT	IT	IY	IE					IZ
J	POWER	JRC	JIC	ARC		JR	JI	JSH	JSL	JSHL	JRT	JIT	JT	JY	JE					JV
K	TIME	KRC	KIC	KC	KCV	KR	KI	KSH	KSL	KSHL	KRT	KIT	KT	KY	KE					KV
L	LEVEL	LRC	LIC	LC	LCV	LR	LI	LSH	LSL	LSHL	LRT	LIT	LT	LY	LE		LW	LG		LV
M	NOISTURE/ HUMIDITY						MI						MT							
N	USER'S CHOICE																			
O	USER'S CHOICE																			
P	PRESSURE VACUUM	PRC	PIC	PC	PCV	PR	PI	PSH	PSL	PSHL	PRT	PIT	PT	PY	PE	PTP			PSV PSE	PV
PD	PRESSURE DIFFERENTIAL	PDRC	PDIC	PDC	PDCV	PDR	PDI	PDSH	PDSL		PDRT	PDIT	PDT	PDY	PE	PTP				PDV
Q	QUALITY	QRC	QIC			QR	QI	QSH	QSL	QSHL	QRT	QIT	QT	QY	QE					QZ
R	RADIATION	RRC	RIC	RC		RR	RI	RSH	RSL	RSHL	RRT	RIT	RT	RY	RE		RW			RZ
S	SPEED	SRC	SIC	SC	SCV	SR	SI	SSH	SSL	SSHL	SRT	SIT	ST	SY	SE					SV
T	TEMPERATURE	TRC	TIC	TC	TCV	TR	TI	TSH	TSL	TSHL	TRT	TIT	TT	TY	TE	TP	TW		TSE	TV
T	TEMPERATURE DIFFERENTIAL	TDRC	TDIC	TDC	TDCV	TDR	TDI	TDSH	TDSL		TDRT	TDIT	TDT	TDY	TDE	TDP TP	TDW TW			TDV
U	MULTIVARIABLE					UR	UI							UY						UV
V	MACHINERY VIBRATION ANALYSIS					VR	VI	VSH	VSL	VSHL	VRT	VIT	VT	VY	VE					VZ
W	WEIGHT FORCE	WRC	WIC	WC	WCV	WR	WI	WSH	WSL	WSHL	WRT	WIT	WT	WY	WE					WZ
WD	WEIGHT FORCE DIFFERENTIAL	WDRC	WDIC	WDC	WDCV	WDR	WDI	WDSH	WDSL		WDRT	WDIT	WDT	WDY	WDE WE					WDZ
X	USER'S CHOICE																			
Y	EVENT STATE PRESENCE		YIC	YC		YR	YI	YSH	YSL				YT	YY	YE					YZ
Z	POSITION DIMENSION	ZRC	ZIC	ZC	ZCV	ZR	ZI	ZSH	ZSL	ZSHL	ZRT	ZIT	ZT	ZY	ZE					ZV
ZD	GAUGING DEVIATION	ZDRC	ZDIC	ZDC	ZDCV	ZDR	ZDI	ZDSH	ZDSL		ZDRT	ZDIT	ZDT	ZDY	ZDE					ZDV

GENERAL NOTES

XX

THIS TABLE IS NOT ALL-INCLUSIVE, SEE ANSI/ISA STANDARD ISA-S5.1-1984 (R 1992)

*A, ALARM, THE ANNUNCIATING DEVICE, MAY BE USED IN THE SAME FASHION AS, SWITCH, THE ACTING DEVICE.

** THE LETTERS H AND L MAY BE OMITTED IN THE UNDEFINED CASE.

OTHER POSSIBLE COMBINATIONS:

FO	(RESTRICTION ORIFICE)	PFR	(RATIO)
FRK, HIK	(CONTROL STATIONS)	KQI	(RUNNING TIME INDICATOR)
FX	(ACCESSORIES)	QQI	(INDICATING COUNTER)
TJR	(SCANNING RECORDER)	WKIC	(RATE-OF-WEIGHT-LOSS CONTROLLER)
LLH	(PILOT LIGHT)	HMS	(HAND MOMENTARY SWITCH)

wsp

8519 JEFFERSON NE
ALBUQUERQUE, NM 87113
TEL: (505) 821-1801

JEFFREY L. JORGENSEN NEW MEXICO 19288 PROFESSIONAL ENGINEER 03/21/23

PROJECT:
KAYENTA WWTP HIGH-PERFORMANCE POND SYSTEM FINAL DESIGN

NAVAJO TRIBAL UTILITY AUTHORITY
PO BOX 170
FT. DEFIANCE, AZ 86504
WSP PROJECT No: 2151700011

REVISIONS

NO.	DATE	BY	APPROVED
RCA	20230324	RSB	PP

DESIGNED BY:	RSB
DRAWN BY:	RSB
CHECKED BY:	PP
APPROVED BY:	PP
DATE:	20230324

SHEET TITLE:
PROCESS FLOW SYMBOLS & NOTES PG. 4 - P & ID

K-A05

SHEET NUMBER:	REV. #
K-A05	RCA

SHEET 5 OF 21 SHEETS

C:\I&C Solutions\2023 CAD\23-031 to 23-060\23-045 NTUA\KAYENTA\K-A05.dwg

3/21/2023 3:21:47 AM, PDF CREATED

CONSTRUCTION NOTES:

1. TAP EXISTING 10" PVC FORCE MAIN
2. TRANSFORMER AND EMERGENCY POWER GENERATOR
3. POWER EXTENSION
4. NEW 8" HDPE FORCE MAIN AND FLOW PATH
5. BAFFLES (FLOATING SYNTHETIC)
6. BIOLAC AERATION SYSTEM
7. 6" SCH 40 PVC MLSS PIPING
8. 20' SECTION 12" DI SANITARY SEWER INLET
9. INLET STRUCTURE
10. 12" DI AIR PIPING
11. AERATION BLOWERS WITH CONCRETE PAD
12. NEW MANHOLE
13. 12" PVC SDR 35 SEWER
14. TAP EXISTING SEWER MANHOLE
15. OUTLET STRUCTURE. SEE DISCHARGE STRUCTURE DETAILS SHEET C-XXX
16. ANCHOR MOORING POST FOR BAFFLES, AERATORS, AND DIFFUSERS
17. 20' SECTION 10" DI SANITARY SEWER OUTLET
18. INSTALL 6-15 HP AIRE-O2 ASPIRATING AERATOR BY AERATION INDUSTRIES INTERNATIONAL, LLC. INCLUDES AERATOR, ELECTRICAL CABLES, MOORING CABLES, ETC.
19. AERATOR MOORING CABLES
20. 4' X 3 ' WINDOW IN SYNTHETIC BAFFLE
21. MLSS PUMP STATION

SHEET GENERAL NOTES:

1. UTILITIES ILLUSTRATED ON PLAN ARE PRESENTED FOR CONTRACTOR INFORMATION, IF APPLICABLE. SUBSURFACE UTILITY LOCATES HAVE NOT BEEN FIELD VERIFIED, ACTUAL UTILITIES ARE SUBJECT TO CHANGE AND UNMARKED, UNKNOWN UTILITIES SHOULD BE MITIGATED IN THE FIELD PRIOR TO GROUND DISTURBANCES. COORDINATE WITH NAVAJO TRIBAL UTILITY AUTHORITY (NTUA) IN CHINLE, AZ, AND ARIZONA ONE-CALL UTILITY LOCATE.

N

0 240 480 Feet

wsp

8519 JEFFERSON NE
ALBUQUERQUE, NM 87113
TEL: (505) 821-1801

JEFFREY L. JORGENSEN
NEW MEXICO
19288
PROFESSIONAL ENGINEER
03/21/23

PROJECT:
KAYENTA WWTP HIGH-PERFORMANCE POND SYSTEM FINAL DESIGN

NAVAJO TRIBAL UTILITY AUTHORITY
PO BOX 170
FT. DEFIANCE, AZ 86504
WSP PROJECT No:
2151700011

REVISIONS			
NO.	DATE	BY	APPROVED
RCA	20230324	RSB	PP

DESIGNED BY:	RSB
DRAWN BY:	RSB
CHECKED BY:	PP
APPROVED BY:	PP
DATE:	20230324

SHEET TITLE:
AREA MAP AND CONSTRUCTION NOTES

K-C01

SHEET NUMBER:	REV. #
K-C01	RCA

SHEET 6 OF 21 SHEETS

C:\I&C Solutions\2023 CAD\23-031 to 23-060\23-045 NTUA\KAYENTA\K-C01.dwg

3/21/2023 3:21:51 AM, PDF CREATED

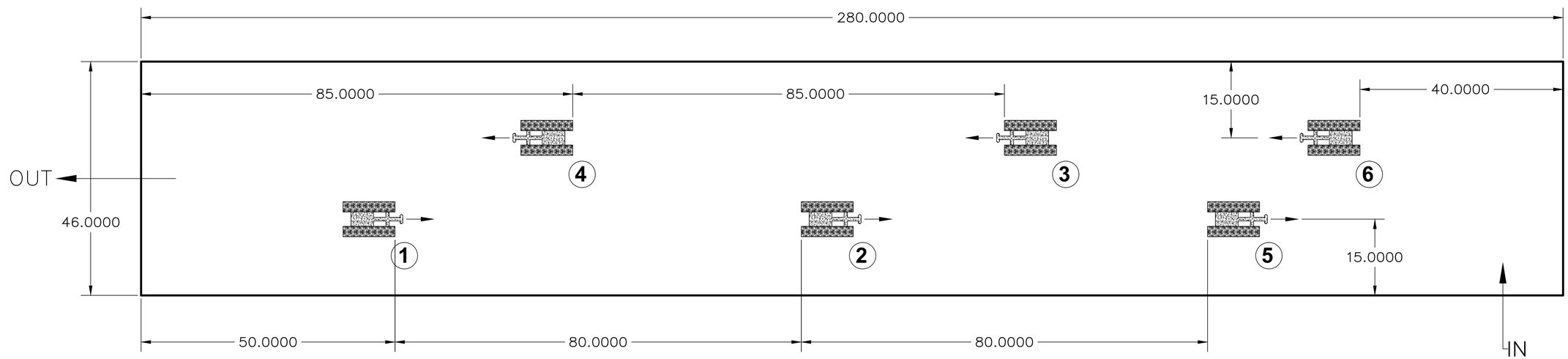

AERATOR SPACING DIAGRAM - KAYENTA
MEASUREMENTS IN FEET
PUMPS 1-4: 15HP
PUMP 5-6: 10HP

wsp
8519 JEFFERSON NE
ALBUQUERQUE, NM 87113
TEL: (505) 821-1801

JEFFREY L. JORGENSEN
NEW MEXICO
19288
03/21/23
PROFESSIONAL ENGINEER

PROJECT:
KAYENTA WWTP HIGH-PERFORMANCE POND SYSTEM FINAL DESIGN

NAVAJO TRIBAL UTILITY AUTHORITY
PO BOX 170
FT. DEFIANCE, AZ 86504

WSP PROJECT No:
2151700011

REVISIONS

NO.	DATE	BY	APPROVED
RCA	20230324	RSB	PP

DESIGNED BY:	RSB
DRAWN BY:	RSB
CHECKED BY:	PP
APPROVED BY:	PP
DATE:	20230324

SHEET TITLE:
AERATOR PUMP PLACEMENT DIAGRAM

K-C02

SHEET NUMBER:	REV. #
K-C02	RCA

SHEET 7 OF 21 SHEETS

C:\I&C Solutions\2023 CAD\23-031 to 23-060\23-045 NTUA\KAYENTA\K-C02.dwg

3/21/2023 3:21:56 AM, PDF CREATED

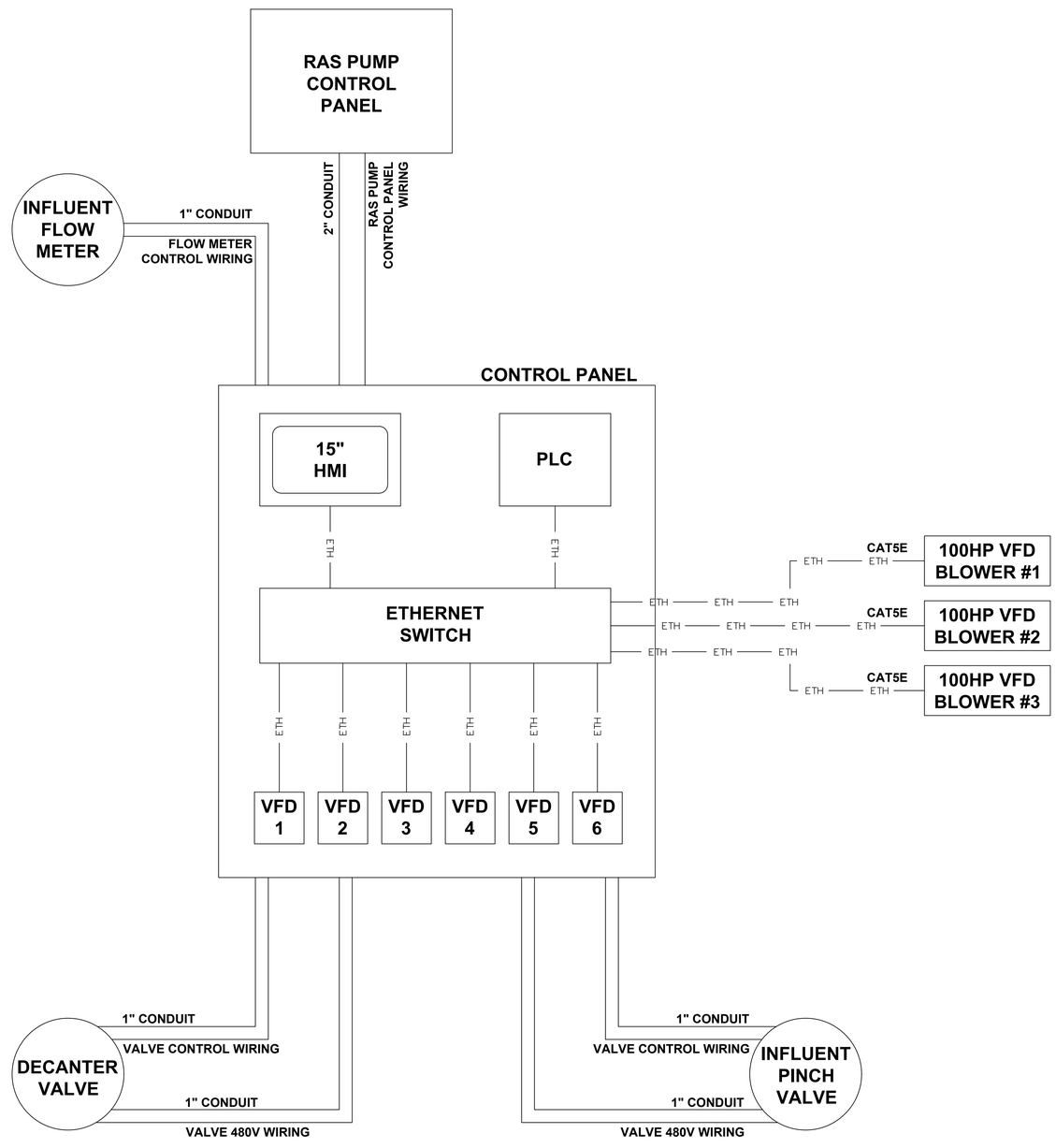

wsp
8519 JEFFERSON NE
ALBUQUERQUE, NM 87113
TEL: (505) 821-1801

JEFFREY L. JORGENSEN
NEW MEXICO
19288
PROFESSIONAL ENGINEER
03/21/23

PROJECT:
KAYENTA WWTP
HIGH-PERFORMANCE
POND SYSTEM
FINAL DESIGN

NAVAJO TRIBAL UTILITY AUTHORITY
PO BOX 170
FT. DEFIANCE, AZ 86504
WSP PROJECT No:
2151700011

REVISIONS

NO.	DATE	BY	APPROVED
RCA	20230324	RSB	PP

DESIGNED BY:	RSB
DRAWN BY:	RSB
CHECKED BY:	PP
APPROVED BY:	PP
DATE:	20230324

SHEET TITLE:
NETWORK AND CONDUIT
DIAGRAM: PANEL AND FIELD

K-D01

SHEET NUMBER:	REV. #
K-D01	RCA

SHEET 8 OF 21 SHEETS

C:\I&C Solutions\2023 CAD\23-031 to 23-060\23-045 NTUA\KAYENTA\K-D01.dwg

3/21/2023 3:21:59 AM, PDF CREATED

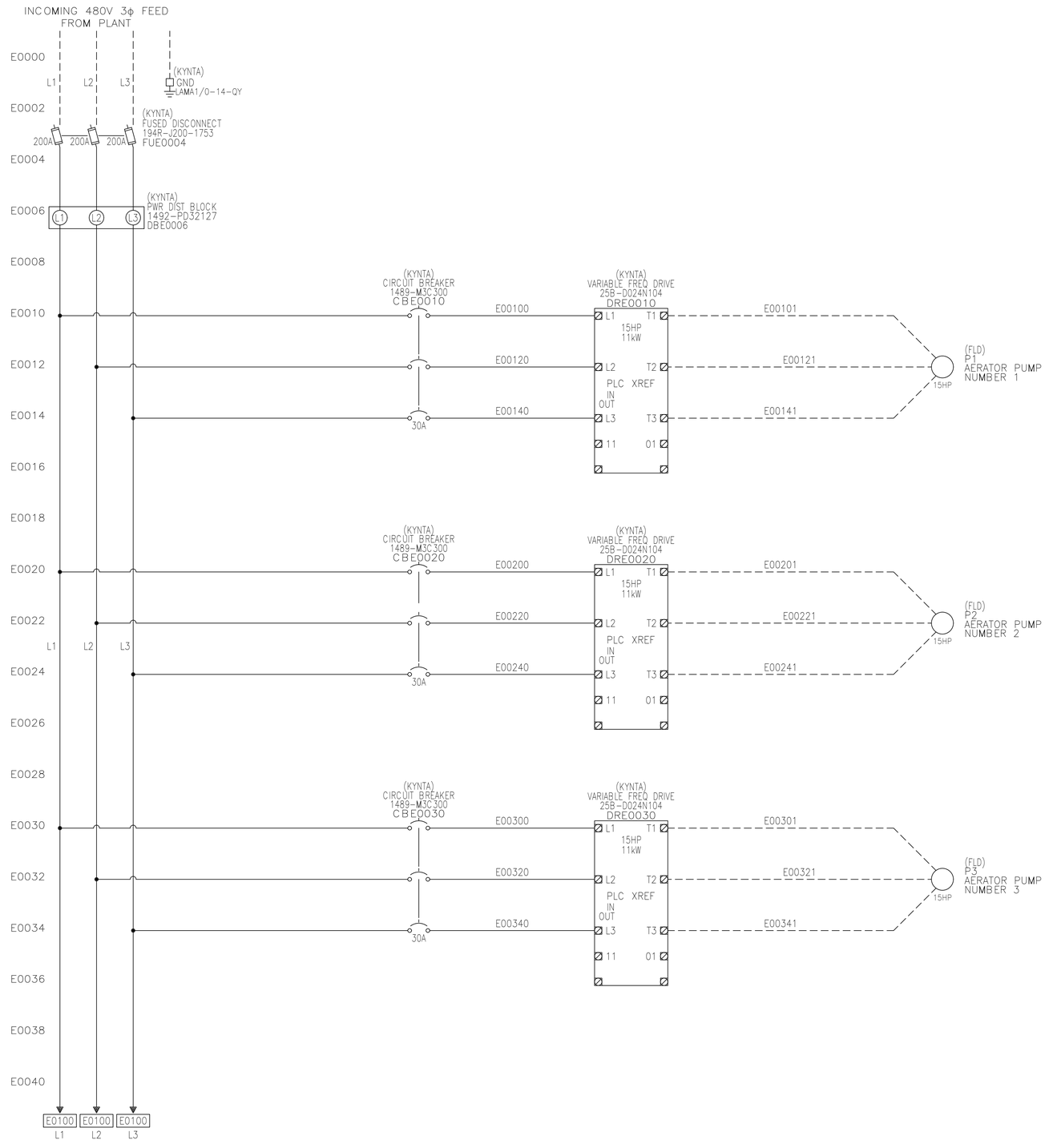

wsp

8519 JEFFERSON NE
ALBUQUERQUE, NM 87113
TEL: (505) 821-1801

JEFFREY L. JORGENSEN
NEW MEXICO
19288
PROFESSIONAL ENGINEER
03/21/23

PROJECT:
KAYENTA WWTP HIGH-PERFORMANCE POND SYSTEM FINAL DESIGN

NAVAJO TRIBAL UTILITY AUTHORITY
PO BOX 170
FT. DEFIANCE, AZ 86504

WSP PROJECT No:
2151700011

REVISIONS

NO.	DATE	BY	APPROVED
RCA	20230324	RSB	PP

DESIGNED BY:	RSB
DRAWN BY:	RSB
CHECKED BY:	PP
APPROVED BY:	PP
DATE:	20230324

SHEET TITLE:
480VAC
THREE-LINE
SCHEMATIC

K-E00

SHEET NUMBER:	REV. #
K-E00	RCA

SHEET 9 OF 21 SHEETS

C:\I&C Solutions\2023 CAD\23-031 to 23-060\23-045 NTUA\KAYENTA\K-E00.dwg

3/21/2023 3:22:02 AM, PDF CREATED

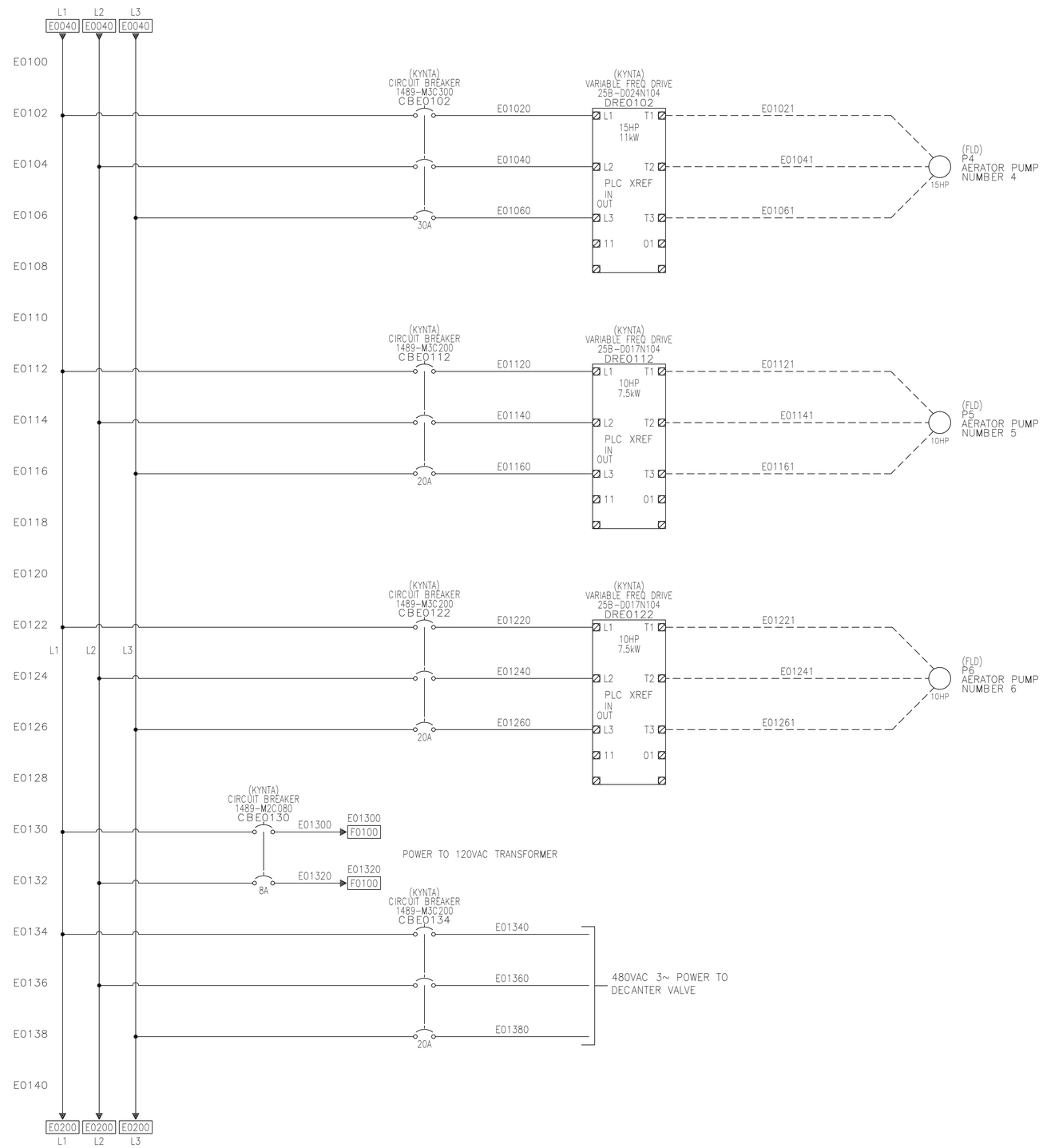

wsp
8519 JEFFERSON NE
ALBUQUERQUE, NM 87113
TEL: (505) 821-1801

JEFFREY L JORGENSEN NEW MEXICO 19288 PROFESSIONAL ENGINEER
03/21/23

PROJECT:
KAYENTA WWTP HIGH-PERFORMANCE POND SYSTEM FINAL DESIGN

NAVAJO TRIBAL UTILITY AUTHORITY
PO BOX 170
FT. DEFIANCE, AZ 86504
WSP PROJECT No:
2151700011

REVISIONS

NO.	DATE	BY	APPROVED
RCA	20230324	RSB	PP

DESIGNED BY:	RSB
DRAWN BY:	RSB
CHECKED BY:	PP
APPROVED BY:	PP
DATE:	20230324

SHEET TITLE:
480VAC
THREE-LINE
SCHEMATIC

K-E01

SHEET NUMBER:	REV. #
K-E01	RCA

SHEET 10 OF 21 SHEETS

C:\I&C Solutions\2023 CAD\23-031 to 23-060\23-045 NTUA\KAYENTA\K-E01.dwg

3/21/2023 3:22:06 AM, PDF CREATED

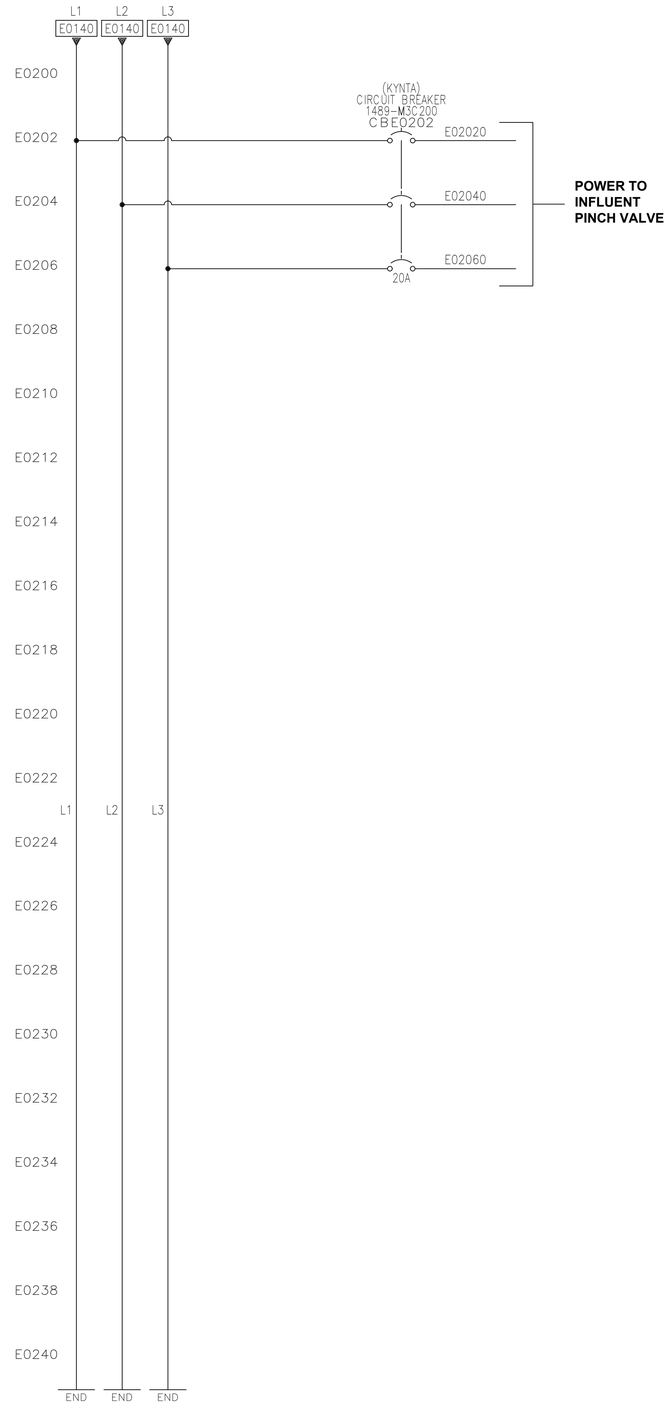

wsp

8519 JEFFERSON NE
ALBUQUERQUE, NM 87113
TEL: (505) 821-1801

JEFFREY L. JORGENSEN
NEW MEXICO
19288
03/21/23
PROFESSIONAL ENGINEER

PROJECT:
KAYENTA WWTP HIGH-PERFORMANCE POND SYSTEM FINAL DESIGN

NAVAJO TRIBAL UTILITY AUTHORITY
PO BOX 170
FT. DEFIANCE, AZ 86504
WSP PROJECT No:
2151700011

REVISIONS

NO.	DATE	BY	APPROVED
RCA	20230324	RSB	PP

DESIGNED BY:	RSB
DRAWN BY:	RSB
CHECKED BY:	PP
APPROVED BY:	PP
DATE:	20230324

SHEET TITLE:
480VAC
THREE-LINE
SCHEMATIC

K-E02

SHEET NUMBER:	REV. #
K-E02	RCA

SHEET 11 OF 21 SHEETS

C:\I&C Solutions\2023 CAD\23-031 to 23-060\23-045 NTUA\KAYENTA\K-E02.dwg

3/21/2023 3:22:09 AM, PDF CREATED

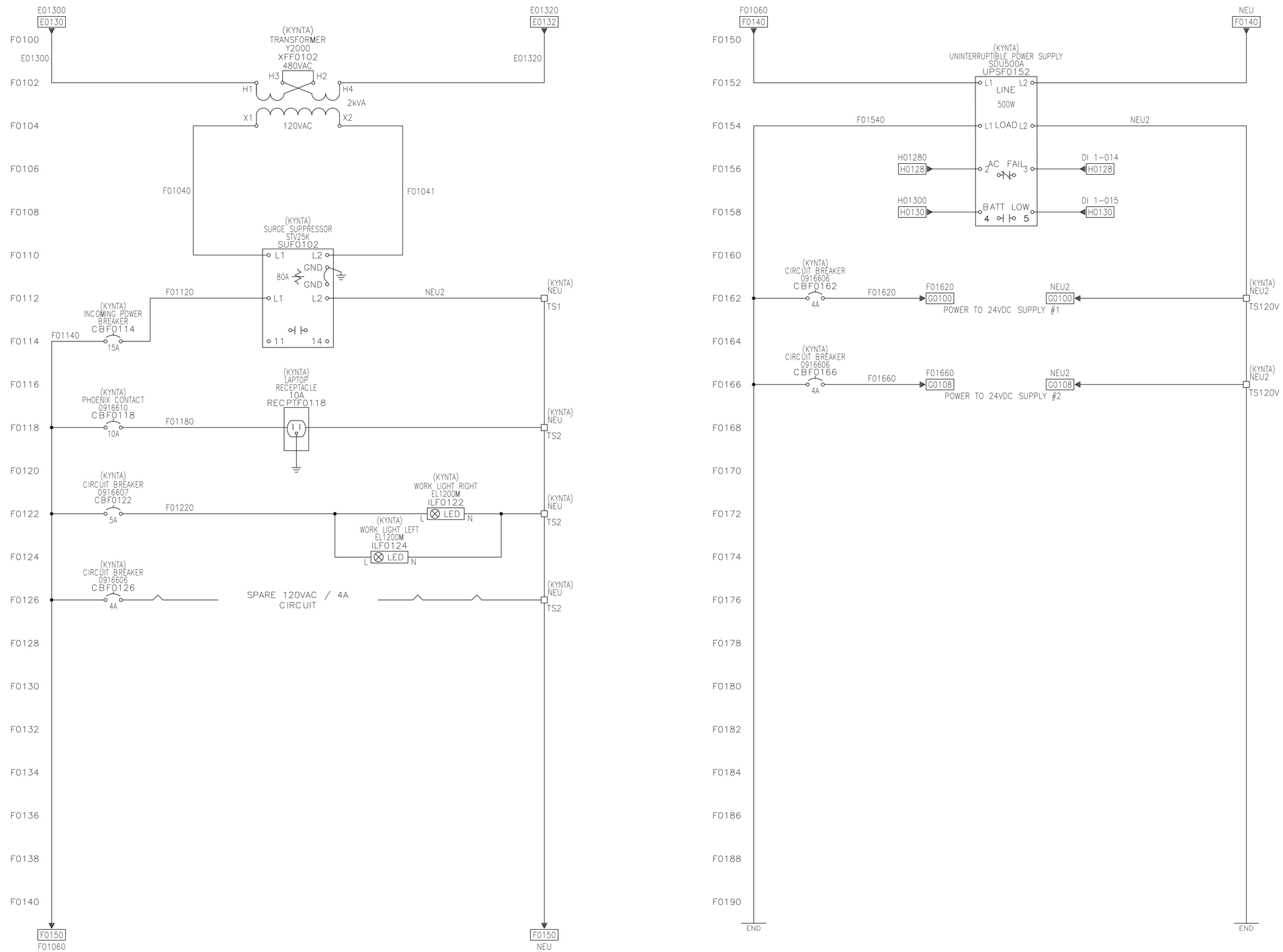

8519 JEFFERSON NE
ALBUQUERQUE, NM 87113
TEL: (505) 821-1801

JEFFREY L. JORGENSEN
NEW MEXICO
19288
PROFESSIONAL ENGINEER
03/21/23

PROJECT:
KAYENTA WWTP HIGH-PERFORMANCE POND SYSTEM FINAL DESIGN

NAVAJO TRIBAL UTILITY AUTHORITY
PO BOX 170
FT. DEFIANCE, AZ 86504
WSP PROJECT No:
2151700011

REVISIONS

NO.	DATE	BY	APPROVED
RCA	20230324	RSB	PP

DESIGNED BY:	RSB
DRAWN BY:	RSB
CHECKED BY:	PP
APPROVED BY:	PP
DATE:	20230324

SHEET TITLE:
120VAC
SCHEMATIC

K-F01

SHEET NUMBER:	REV. #
K-F01	RCA

SHEET 12 OF 21 SHEETS

C:\I&C Solutions\2023 CAD\23-031 to 23-060\23-045 NTUA\KAYENTA\K-F01.dwg

3/21/2023 3:22:12 AM, PDF CREATED

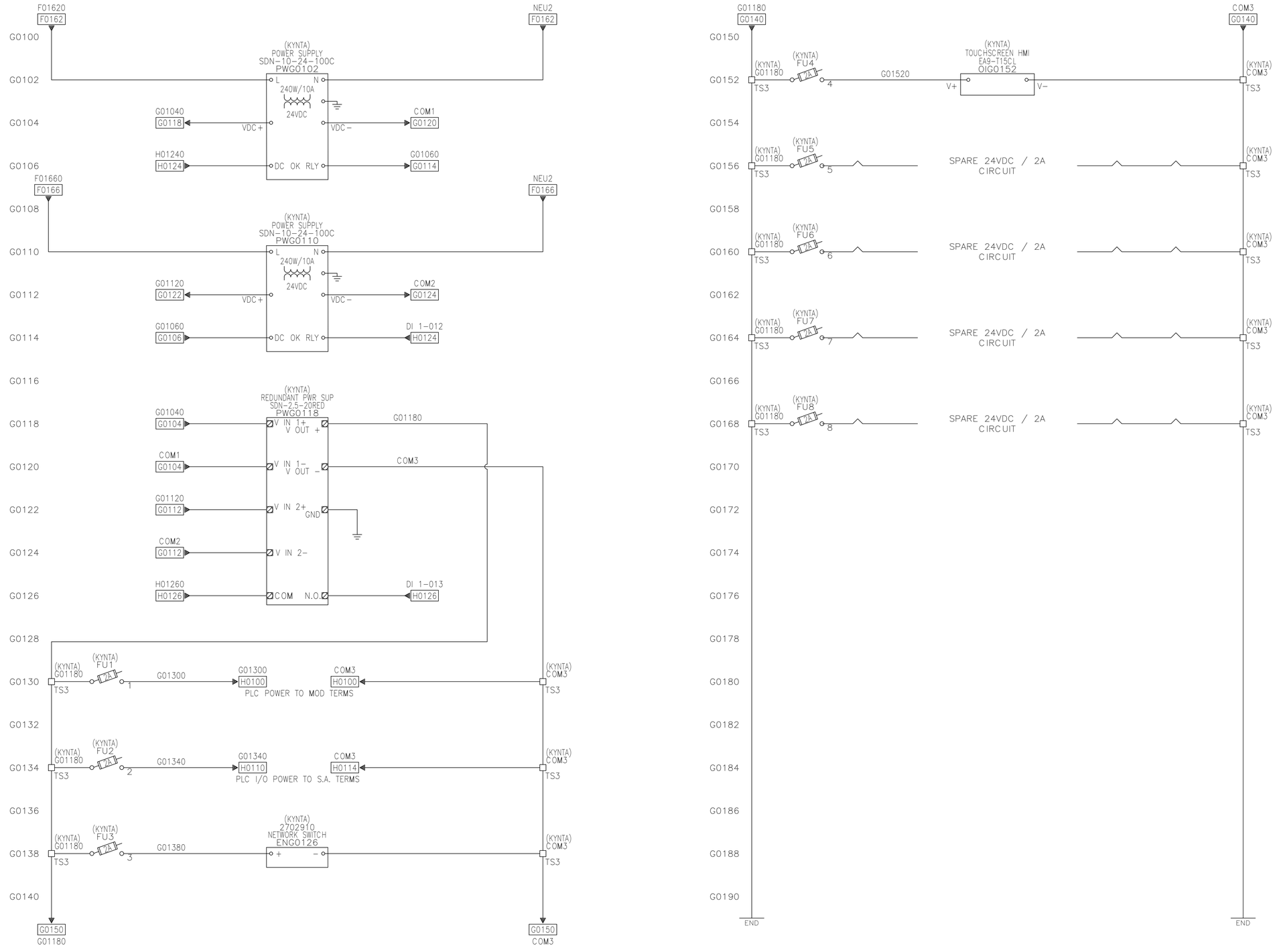

8519 JEFFERSON NE
ALBUQUERQUE, NM 87113
TEL: (505) 821-1801

JEFFREY L. JORGENSEN
NEW MEXICO
19288
PROFESSIONAL ENGINEER
03/21/23

PROJECT:
KAYENTA WWTP HIGH-PERFORMANCE POND SYSTEM FINAL DESIGN

NAVAJO TRIBAL UTILITY AUTHORITY
PO BOX 170
FT. DEFIANCE, AZ 86504

WSP PROJECT No:
2151700011

REVISIONS			
NO.	DATE	BY	APPROVED
RCA	20230324	RSB	PP

DESIGNED BY:	RSB
DRAWN BY:	RSB
CHECKED BY:	PP
APPROVED BY:	PP
DATE:	20230324

SHEET TITLE:
24VDC
SCHEMATIC

K-G01

SHEET NUMBER:	REV. #
K-G01	RCA
SHEET 13 OF 21 SHEETS	

C:\I&C Solutions\2023 CAD\23-031 to 23-060\23-045 NTUA\KAYENTA\K-G01.dwg

3/21/2023 3:22:16 AM, PDF CREATED

PLC MODULE LAYOUT – RACK 1

MODULE 00 PROCESSOR	MODULE 01 D.I.	MODULE 02 D.I.	MODULE 03 D.O.	MODULE 04 A.I.	MODULE 05 A.O.
5069-L330ER	5069-IB16	5069-IB16	5069-OB16	5069-IF8	5069-OF8
H00	H01	H01	H02	H03	H04

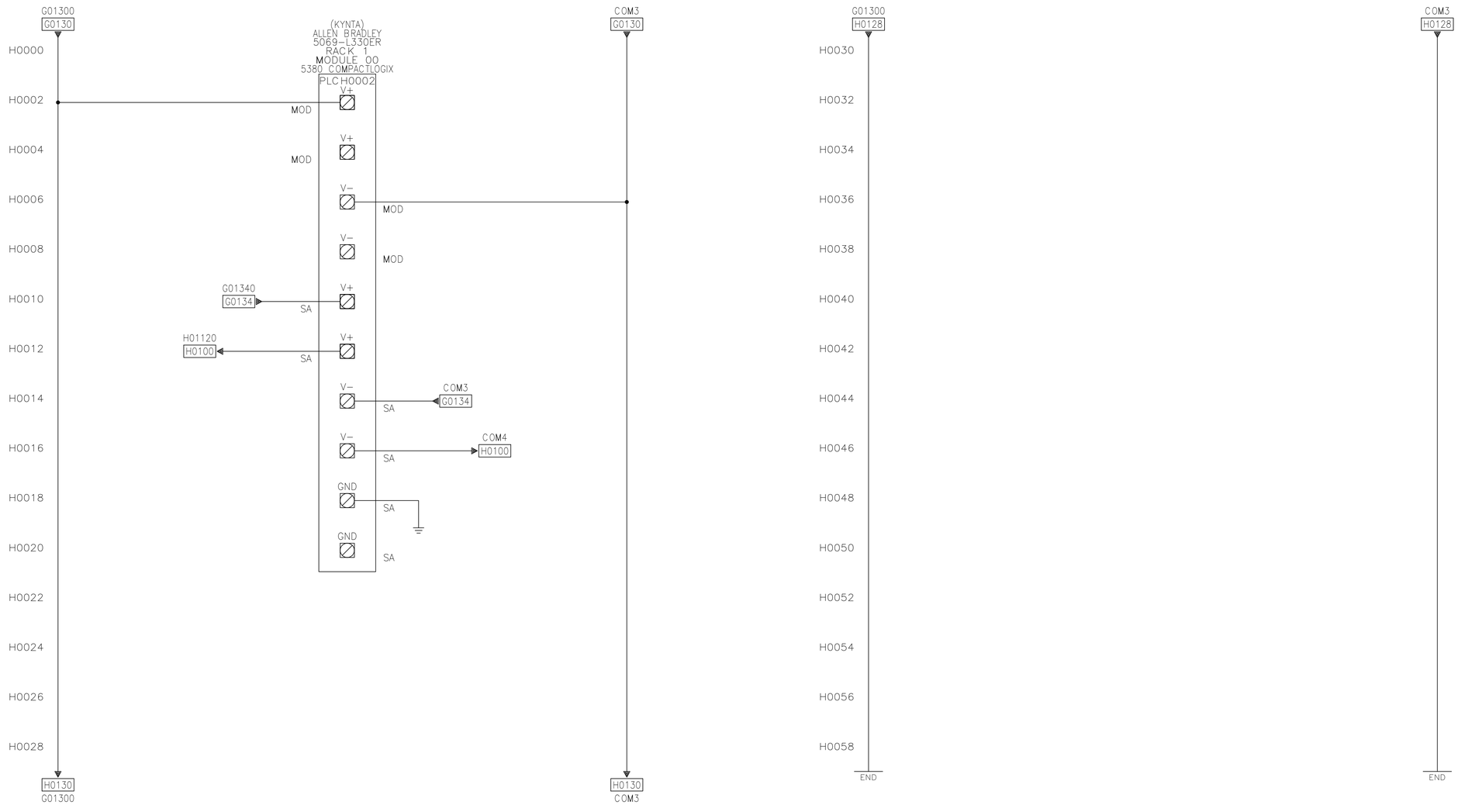

LEGEND & NOTES:

PANEL WIRING
FIELD WIRING
FUTURE WIRING
JUMPER WIRING

1. WIRE SIZE IS 16 AWG UNLESS OTHERWISE SPECIFIED.
2. GROUND WIRE SIZE IS 16AWG UNLESS OTHERWISE SPECIFIED.
3. AN ASTERISK (*) DENOTES MOTORS ABLE TO RUN CONCURRENTLY.
4. COLOR SCHEME (INTERNAL, EXTERNAL, GROUND, LINK).
5. ALL WIRING SHOULD BE SPECIFIED TO THE FOLLOWING COLOR CODE, UNLESS OTHERWISE STATED ON THE SPECIFIED DRAWING SHEET

480VAC POWER	–BLK
SINGLE PHASE 120VAC HOT	–RED
SINGLE PHASE 120VAC NEUTRAL	–WHT
DC POSITIVE (24V+)	–BLU
DC NEGATIVE (0V,COM)	–BLU/WHT
24VAC POSITIVE	–TAN/WHT
GROUNDING	–GRN/YLW
INTERCONNECTIONS	–YLW

8519 JEFFERSON NE
ALBUQUERQUE, NM 87113
TEL: (505) 821-1801

JEFFREY L JORGENSEN
NEW MEXICO
19288
03/21/23
PROFESSIONAL ENGINEER

PROJECT:
KAYENTA WWTP HIGH-PERFORMANCE POND SYSTEM FINAL DESIGN

NAVAJO TRIBAL UTILITY AUTHORITY
PO BOX 170
FT. DEFIANCE, AZ 86504

WSP PROJECT No:
2151700011

REVISIONS

NO.	DATE	BY	APPROVED
RCA	20230324	RSB	PP

DESIGNED BY:	RSB
DRAWN BY:	RSB
CHECKED BY:	PP
APPROVED BY:	PP
DATE:	20230324

SHEET TITLE:
PLC POWER AND COMMUNICATION - RACK 1 MODULE 00

K-H00

SHEET NUMBER:	REV. #
K-H00	RCA

SHEET 14 OF 21 SHEETS

C:\I&C Solutions\2023 CAD\23-031 to 23-060\23-045 NTUA\KAYENTA\K-H00.dwg

3/21/2023 3:22:19 AM, PDF CREATED

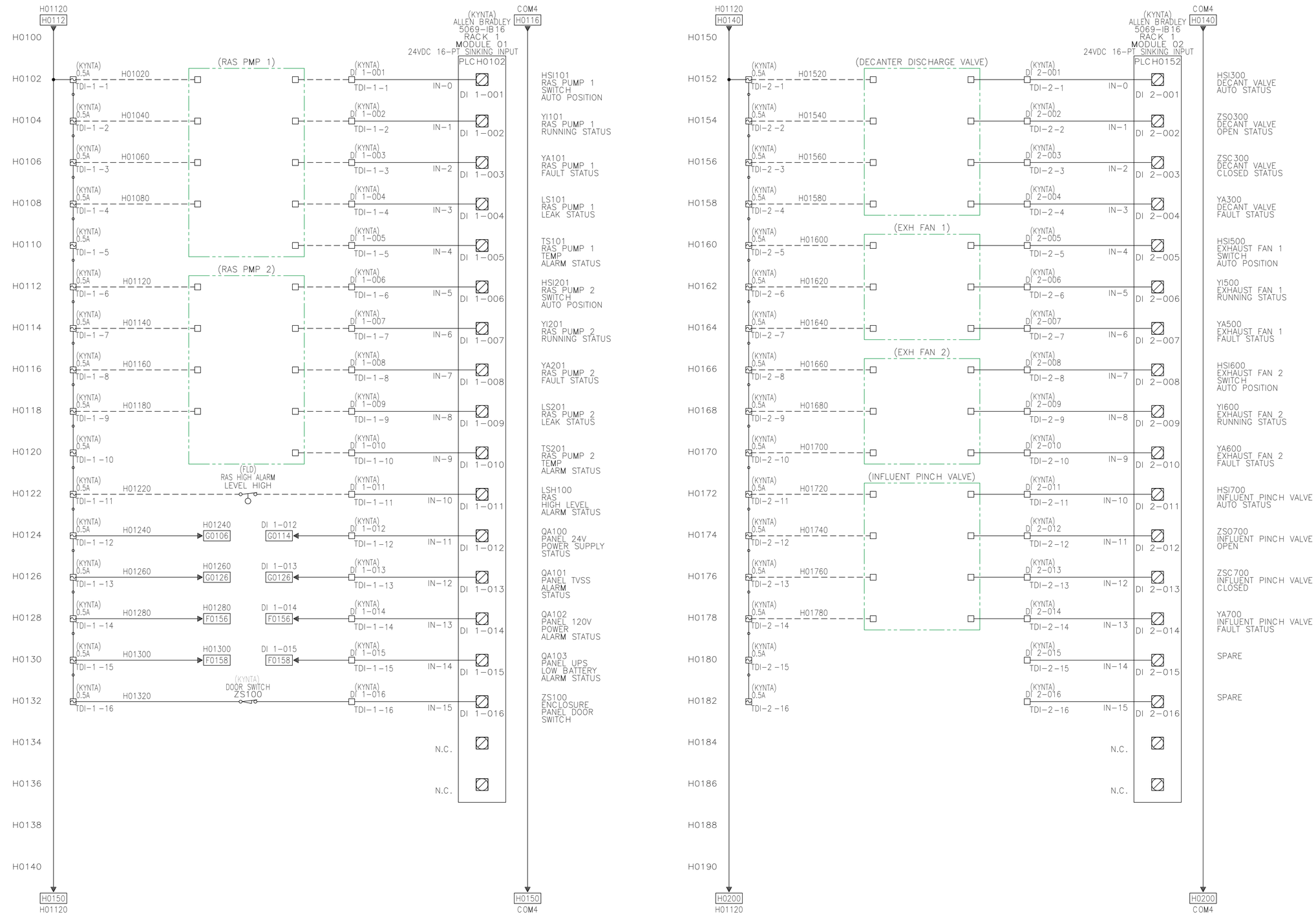

8519 JEFFERSON NE
ALBUQUERQUE, NM 87113
TEL: (505) 821-1801

JEFFREY L JORGENSEN
NEW MEXICO
19288
03/21/23
PROFESSIONAL ENGINEER

PROJECT:
KAYENTA WWTP HIGH-PERFORMANCE POND SYSTEM FINAL DESIGN

NAVAJO TRIBAL UTILITY AUTHORITY
PO BOX 170
FT. DEFIANCE, AZ 86504
WSP PROJECT No:
2151700011

REVISIONS

NO.	DATE	BY	APPROVED
RCA	20230324	RSB	PP

DESIGNED BY:	RSB
DRAWN BY:	RSB
CHECKED BY:	PP
APPROVED BY:	PP
DATE:	20230324

SHEET TITLE:
I/O SCHEMATIC
PLC RACK 1
MODULES 01 & 02

K-H01

SHEET NUMBER:	REV. #
K-H01	RCA

SHEET 15 OF 21 SHEETS

C:\I&C Solutions\2023 CAD\23-031 to 23-060\23-045 NTUA\KAYENTA\K-H01.dwg

3/21/2023 3:22:23 AM, PDF CREATED

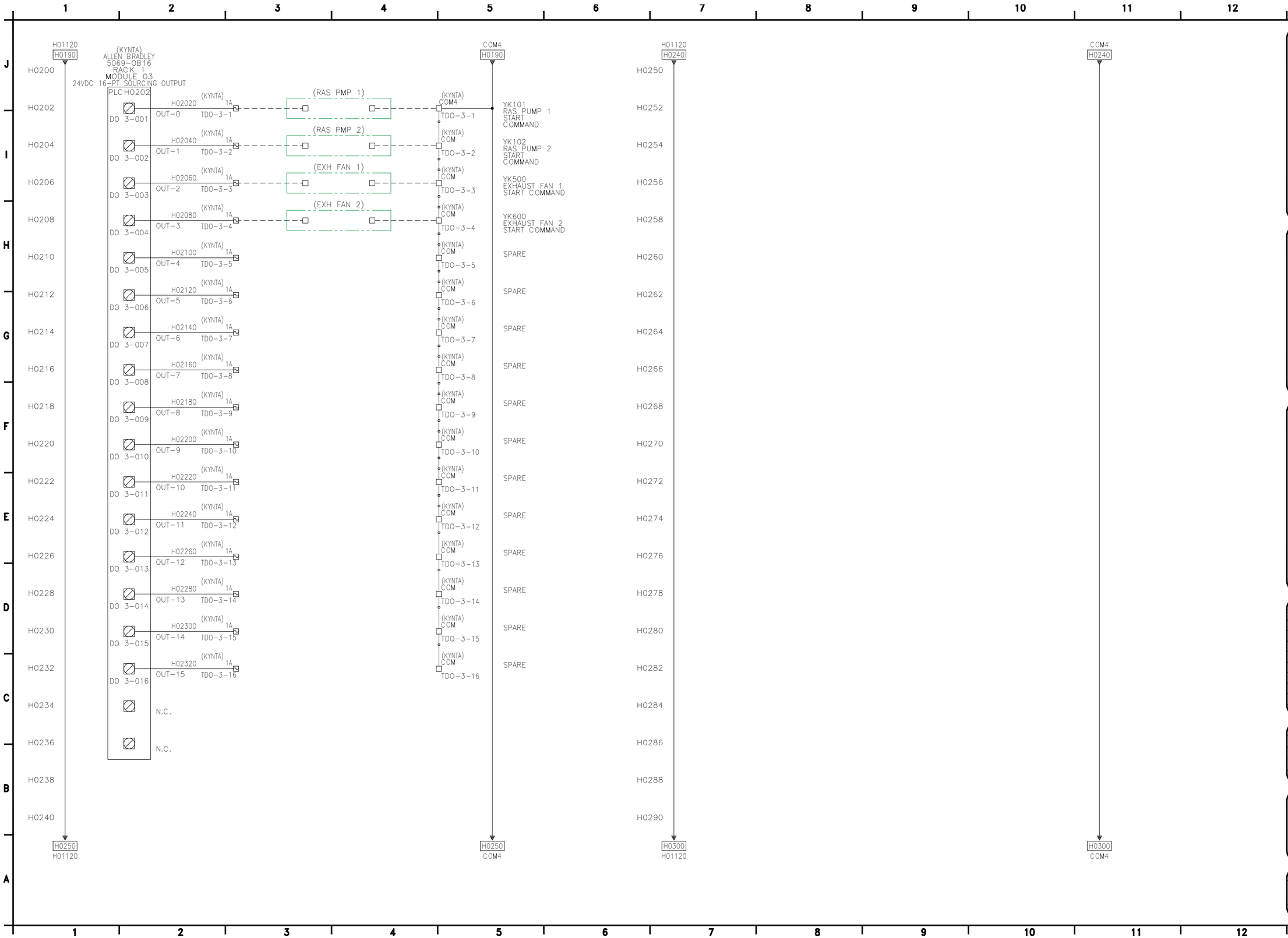

wsp

8519 JEFFERSON NE
ALBUQUERQUE, NM 87113
TEL: (505) 821-1801

JEFFREY L. JORGENSEN
NEW MEXICO
19288
PROFESSIONAL ENGINEER
03/21/23

PROJECT:
KAYENTA WWTP HIGH-PERFORMANCE POND SYSTEM FINAL DESIGN

NAVAJO TRIBAL UTILITY AUTHORITY
PO BOX 170
FT. DEFIANCE, AZ 86504
WSP PROJECT No:
2151700011

REVISIONS			
NO.	DATE	BY	APPROVED
RCA	20230324	RSB	PP

DESIGNED BY:	RSB
DRAWN BY:	RSB
CHECKED BY:	PP
APPROVED BY:	PP
DATE:	20230324

SHEET TITLE:
I/O SCHEMATIC
PLC RACK 1
MODULE 03

K-H02

SHEET NUMBER:	REV. #
K-H02	RCA

SHEET 16 OF 21 SHEETS

C:\I&C Solutions\2023 CAD\23-031 to 23-060\23-045 NTUA\KAYENTA\K-H02.dwg

3/21/2023 3:22:26 AM, PDF CREATED

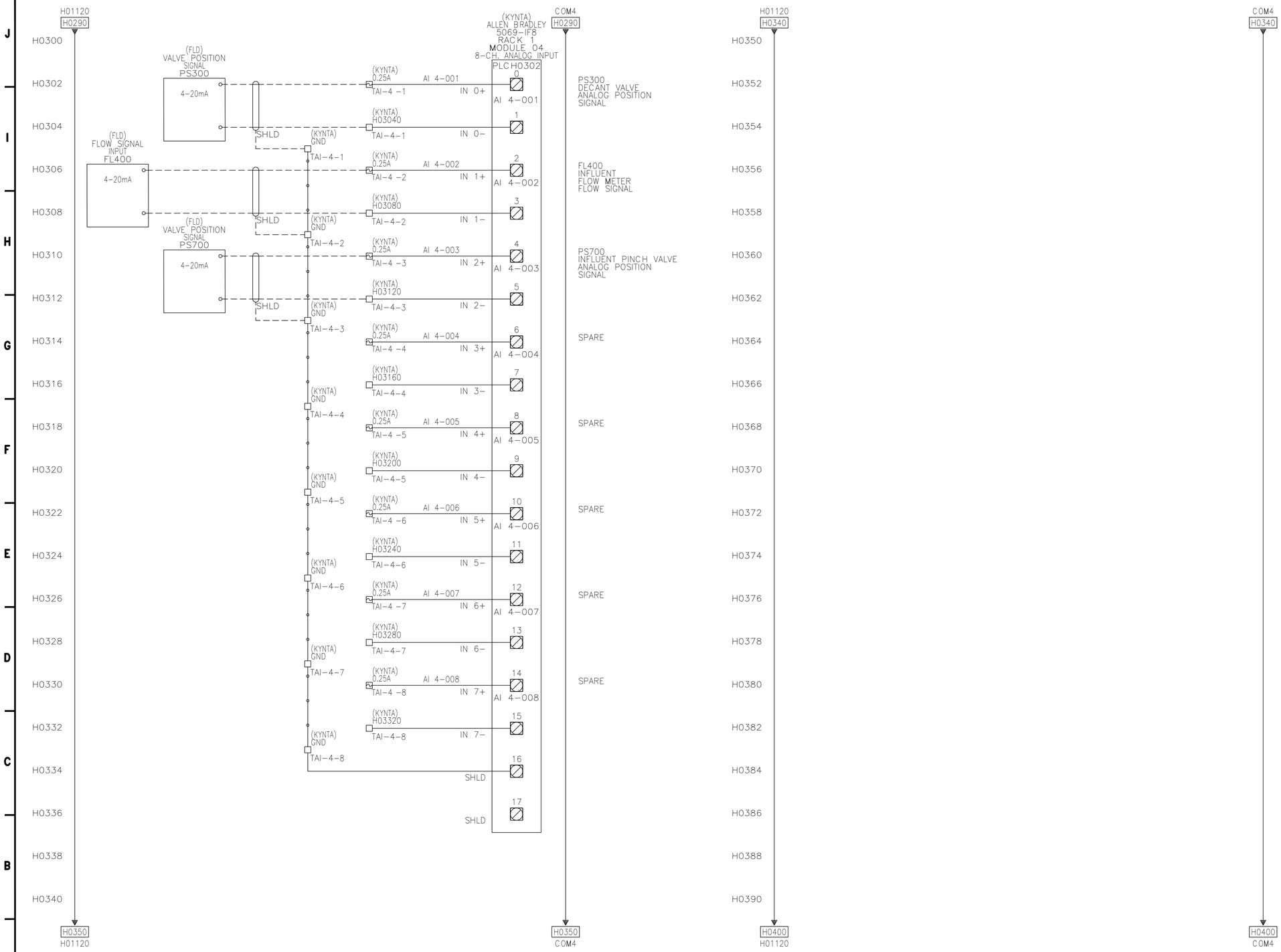

wsp

8519 JEFFERSON NE
ALBUQUERQUE, NM 87113
TEL: (505) 821-1801

JEFFREY L. JORGENSEN
NEW MEXICO
19288
PROFESSIONAL ENGINEER
03/21/23

PROJECT:
KAYENTA WWTP HIGH-PERFORMANCE POND SYSTEM FINAL DESIGN

NAVAJO TRIBAL UTILITY AUTHORITY
PO BOX 170
FT. DEFIANCE, AZ 86504
WSP PROJECT No:
2151700011

REVISIONS

NO.	DATE	BY	APPROVED
RCA	20230324	RSB	PP

DESIGNED BY:	RSB
DRAWN BY:	RSB
CHECKED BY:	PP
APPROVED BY:	PP
DATE:	20230324

SHEET TITLE:
I/O SCHEMATIC
PLC RACK 1
MODULE 04

K-H03

SHEET NUMBER:	REV. #
K-H03	RCA

SHEET 17 OF 21 SHEETS

C:\I&C Solutions\2023 CAD\23-031 to 23-060\23-045 NTUA\KAYENTA\K-H03.dwg

3/21/2023 3:22:30 AM, PDF CREATED

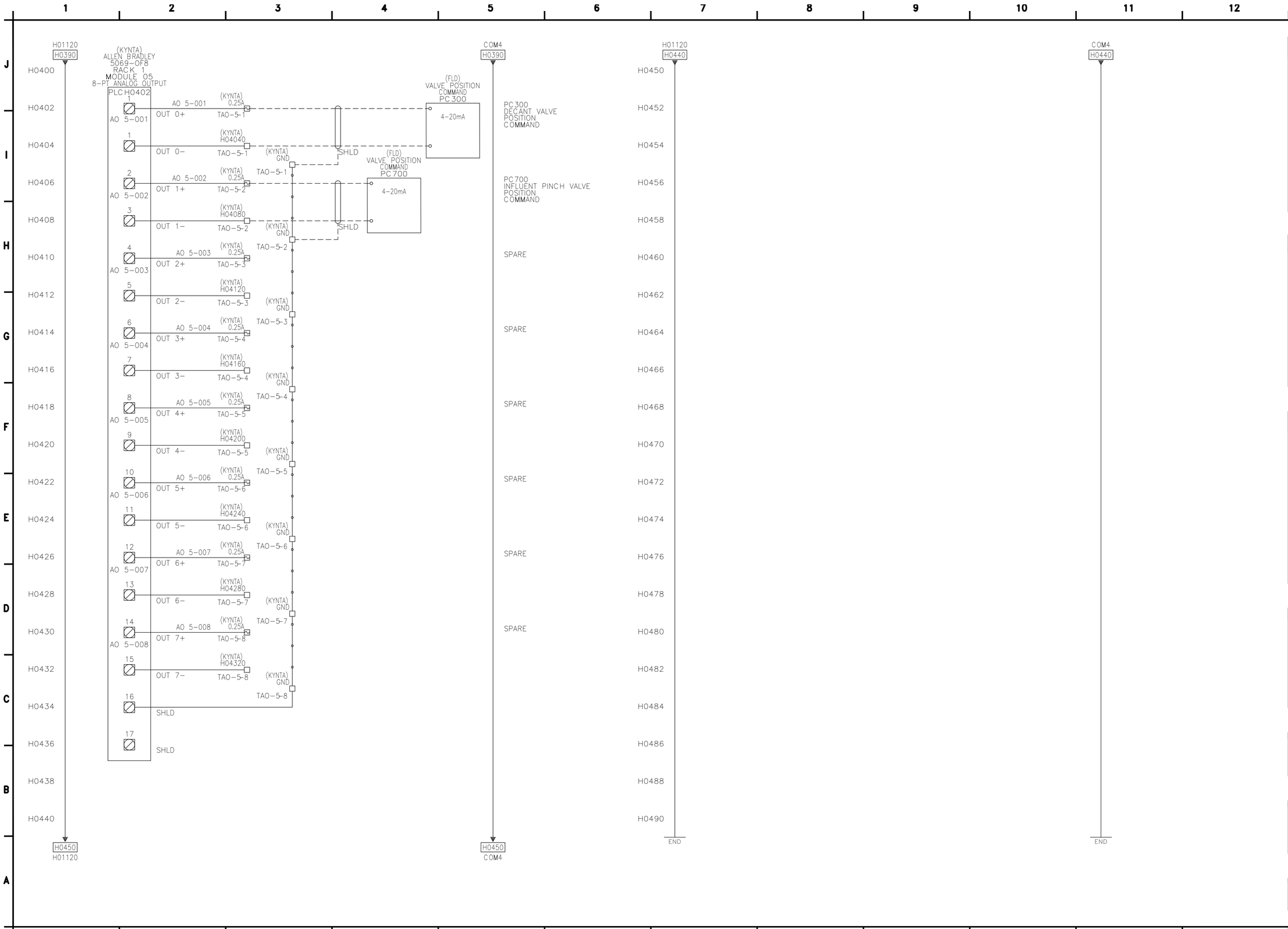

wsp

8519 JEFFERSON NE
ALBUQUERQUE, NM 87113
TEL: (505) 821-1801

JEFFREY L JORGENSEN
NEW MEXICO
19288
PROFESSIONAL ENGINEER
03/21/23

PROJECT:
KAYENTA WWTP HIGH-PERFORMANCE POND SYSTEM FINAL DESIGN

NAVAJO TRIBAL UTILITY AUTHORITY
PO BOX 170
FT. DEFIANCE, AZ 86504
WSP PROJECT No:
2151700011

REVISIONS			
NO.	DATE	BY	APPROVED
RCA	20230324	RSB	PP

DESIGNED BY:	RSB
DRAWN BY:	RSB
CHECKED BY:	PP
APPROVED BY:	PP
DATE:	20230324

SHEET TITLE:
I/O SCHEMATIC
PLC RACK 1
MODULE 05

K-H04

SHEET NUMBER:	REV. #
K-H04	RCA
SHEET 18 OF 21 SHEETS	

C:\I&C Solutions\2023 CAD\23-031 to 23-060\23-045 NTUA\KAYENTA\K-H04.dwg

3/21/2023 3:22:33 AM, PDF CREATED

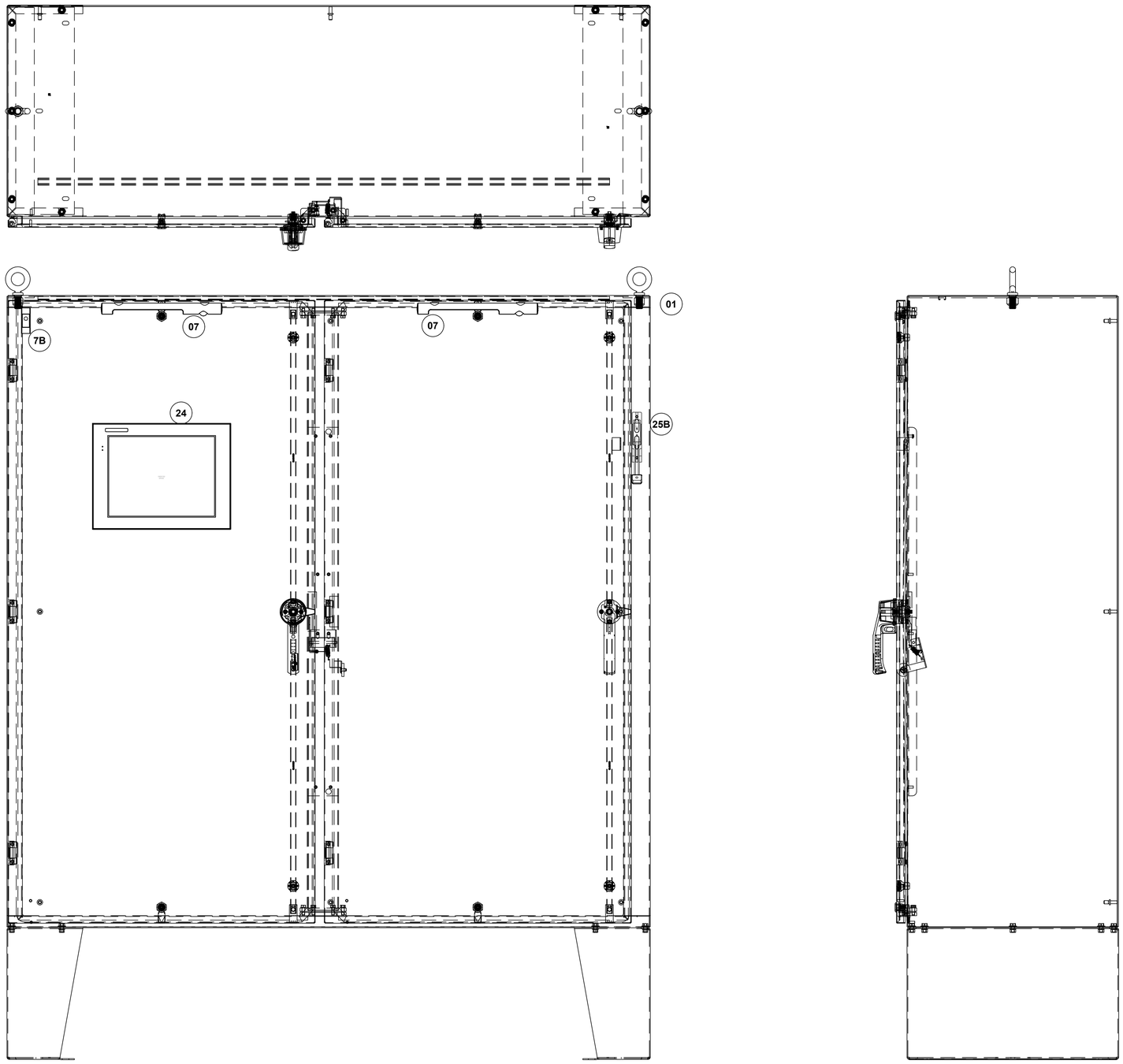

ENCLOSURE LAYOUT
CONTROL PANEL
KAYENTA – CONTROL
HOFFMAN: A72HX7324SSLPQT
NOT TO SCALE

wsp
8519 JEFFERSON NE
ALBUQUERQUE, NM 87113
TEL: (505) 821-1801

JEFFREY L. JORGENSEN
NEW MEXICO
19288
PROFESSIONAL ENGINEER
03/21/23

PROJECT:
KAYENTA WWTP HIGH-PERFORMANCE POND SYSTEM FINAL DESIGN

NAVAJO TRIBAL UTILITY AUTHORITY
PO BOX 170
FT. DEFIANCE, AZ 86504
WSP PROJECT No:
2151700011

REVISIONS

NO.	DATE	BY	APPROVED
RCA	20230324	RSB	PP

DESIGNED BY:	RSB
DRAWN BY:	RSB
CHECKED BY:	PP
APPROVED BY:	PP
DATE:	20230324

SHEET TITLE:
ASSEMBLY DRAWING
ENCLOSURE

K-M01

SHEET NUMBER:	REV. #
K-M01	RCA
SHEET 19 OF 21 SHEETS	

C:\I&C Solutions\2023 CAD\23-031 to 23-060\23-045 NTUA\KAYENTA\K-M01.dwg

3/21/2023 3:22:37 AM, PDF CREATED

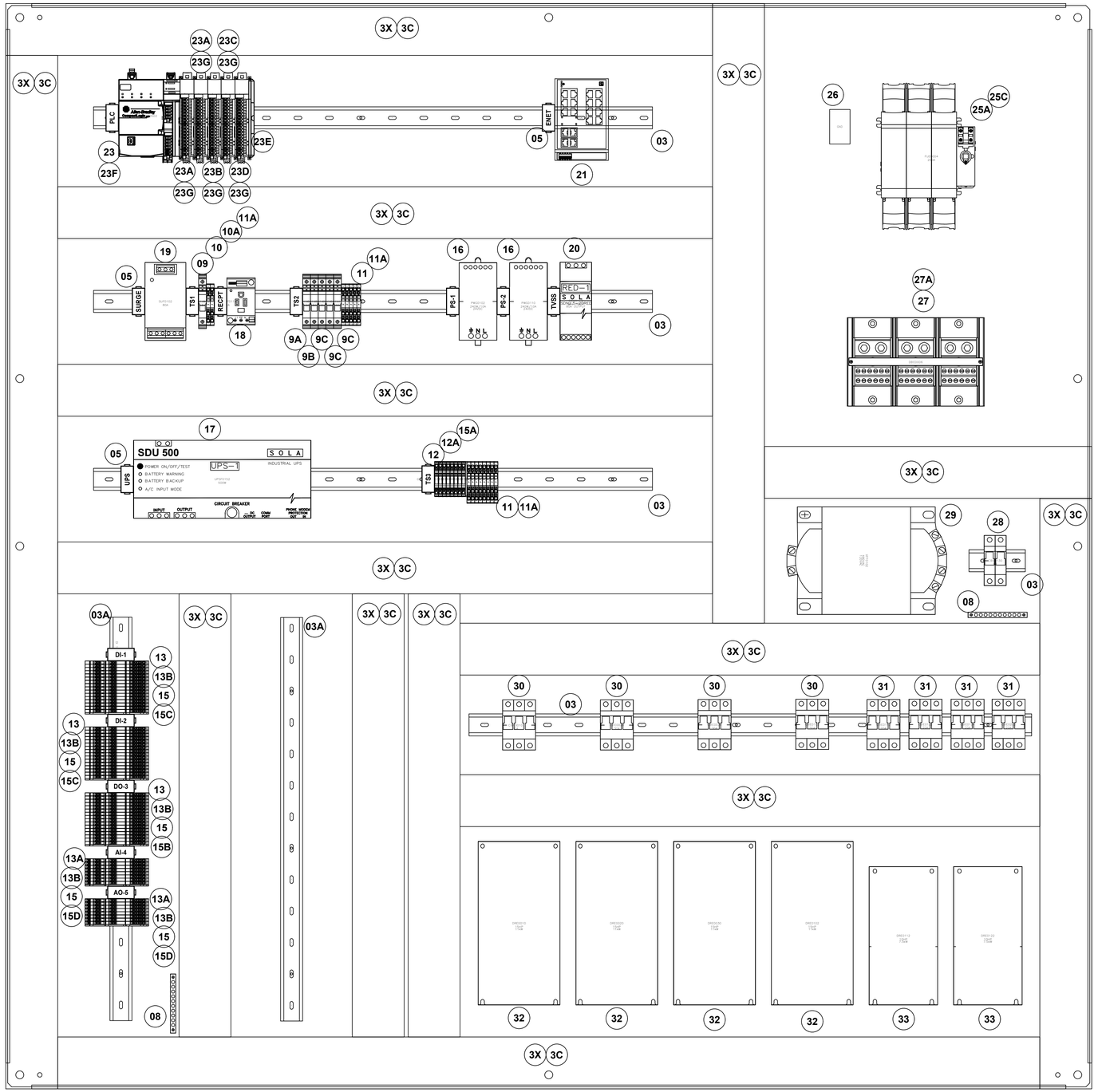

BACKPLATE LAYOUT
CONTROL PANEL
KAYENTA – CONTROL
HOFFMAN: A72P72
NOT TO SCALE

wsp
8519 JEFFERSON NE
ALBUQUERQUE, NM 87113
TEL: (505) 821-1801

JEFFREY L. JORGENSEN
NEW MEXICO
19288
PROFESSIONAL ENGINEER
03/21/23

PROJECT:
KAYENTA WWTP HIGH-PERFORMANCE POND SYSTEM FINAL DESIGN

NAVAJO TRIBAL UTILITY AUTHORITY
PO BOX 170
FT. DEFIANCE, AZ 86504
WSP PROJECT No:
2151700011

REVISIONS			
NO.	DATE	BY	APPROVED
RCA	20230324	RSB	PP

DESIGNED BY:	RSB
DRAWN BY:	RSB
CHECKED BY:	PP
APPROVED BY:	PP
DATE:	20230324

SHEET TITLE:
ASSEMBLY DRAWING
BACKPLATE

K-M02

SHEET NUMBER:	REV. #
K-M02	RCA
SHEET 20 OF 21 SHEETS	

C:\I&C Solutions\2023 CAD\23-031 to 23-060\23-045 NTUA\KAYENTA\K-M02.dwg

3/21/2023 3:22:42 AM, PDF CREATED

ITEM	QTY	CATALOG	MFG	DESC	TAGS
01	1	A72HX7324SSLPQT	HOFFMAN	FLOOR-MOUNT DISCONNECT, 2-DOOR ENCLOSURE, 3-PT LATCH, TYPE 4X, 72x74x24, BRUSHED, SS304	
02	1	A72P72	HOFFMAN	BACKPLATE, 68x68, MILD STEEL, PAINTED	
03	A/R	0801733	PHOENIX CONTACT	DIN RAIL (35mm X 7.5mm X 1m)	
03A	A/R	XUS001736	ENTRELEC	DIN RAIL, RAISED, (35mm X 50mm X 1m)	
04	A/R	3022276	PHOENIX CONTACT	DIN RAIL ANCHOR, CLIP-FIX 35-5	(not shown)
05	A/R	0800307	PHOENIX CONTACT	DIN RAIL MARKER, UBE-D	
07	2	EL1200M	HOFFMAN	ENCLOSURE LAMP KIT, LED, MOTION SENSOR	ILF0122,ILF0124
7B	1	ALFSWD	HOFFMAN	DOOR SWITCH, ENCLOSURE	ZS100
08	2	PK15GTA	SCHNEIDER ELECTRIC	GROUND BAR KIT, 10 POSITION, #14-#4AWG	
09	1	0916612	PHOENIX CONTACT	120VAC CIRCUIT BREAKER 15A RATED (UT 6-TMC M 15A)	CBF0114
9A	1	0916610	PHOENIX CONTACT	120VAC CIRCUIT BREAKER 10A RATED (UT 6-TMC M 10A)	CBF0118
9B	1	0916607	PHOENIX CONTACT	120VAC CIRCUIT BREAKER 5A RATED (UT 6-TMC M 5A)	CBF0122
9C	3	0916606	PHOENIX CONTACT	120VAC CIRCUIT BREAKER 4A RATED (UT 6-TMC M 4A)	CBF0126,CBF0162,CBF0166
10	1	3211775	PHOENIX CONTACT	FEED THRU TERMINAL BLOCK, 32A, BLUE (PT4-TWIN-BU)	TS1
10A	1	3211780	PHOENIX CONTACT	FEED THRU TERMINAL BLOCK, 32A, GND (PT4-TWIN-PE)	TS1
11	11	3211771	PHOENIX CONTACT	FEED THRU TERMINAL BLOCK, 32A, GRAY (PT4-TWIN)	TS2,TS3
12	8	3211903	PHOENIX CONTACT	FUSE MODULAR TERMINAL BLOCK, LED (PT4-HESILED 24)	TS3
13	48	3213961	PHOENIX CONTACT	DI/DO TERMINAL BLOCK	TDI-1,TDI-2,TDO-3
13A	16	3213960	PHOENIX CONTACT	AI/AO TERMINAL BLOCK	TAI-4,TAO-5
13B	5	3213976	PHOENIX CONTACT	END PLATE FOR I/O TERMINAL BLOCK	TDI-1,TDI-2,TDO-3,TAI-4,TAO-5
15	64	3209248	PHOENIX CONTACT	5x20 24VDC FUSE HOLDER (P-FU 5X20 LED 24-5)	TDI-1,TDI-2,TDO-3,TAI-4,TAO-5
15A	8	GMA-2-R	BUSSMAN	2A FUSE, 5mm X 20mm	TS3
15B	16	GMA-1-R	BUSSMAN	1A FUSE, 5mm X 20mm	TDO-3
15C	32	GMA-500-R	BUSSMAN	500mA FUSE, 5mm X 20mm	TDI-1,TDI-2
15D	16	GMA-250-R	BUSSMAN	250mA FUSE, 5mm X 20mm	TAI-4,TAO-5
16	2	SDN-10-24-100C	SOLA	24VDC POWER SUPPLY, 10A/240W RATED	PWG0102,PWG0110
17	1	SDU500A	SOLA	UNINTERRUPTIBLE POWER SUPPLY, 500W	UPSF0152
18	1	0804155	PHOENIX CONTACT	120VAC DIN RAIL MOUNT RECEPTACLE	RECPTF0118
19	1	STV25K	SOLA	SURGE PROTECTION DEVICE	SUF0102
20	1	SDN-2.5-20RED	SOLA	TVSS DEVICE	PWG0118
21	1	2702910	PHOENIX CONTACT	ETHERNET SWITCH, 10x RJ45	ENG0126
23	1	5069-L330ER	ALLEN BRADLEY	COMPACTLOGIX 5380 SERIES PLC, 60 NODE, 3MB MEM, 3 IO RACK	PLCH0002
23A	2	5069-IB16	ALLEN BRADLEY	COMPACT 5000 I/O DIGITAL 16-POINT SINKING INPUT MODULE 24VDC	PLCH0102,PLCH0152
23B	1	5069-OB16	ALLEN BRADLEY	COMPACT 5000 I/O DIGITAL 16-POINT OUTPUT MODULE 24VDC	PLCH0202
23C	1	5069-IF8	ALLEN BRADLEY	COMPACT 5000 I/O ANALOG 8-POINT INPUT MODULE	PLCH0302
23D	1	5069-OF8	ALLEN BRADLEY	COMPACT 5000 I/O ANALOG 8-POINT OUTPUT MODULE	PLCH0402
23E	1	5069-ECR	ALLEN BRADLEY	COMPACT 5000 I/O END CAP, RIGHT	
23F	1	5069-RTB64-SPRING	ALLEN BRADLEY	COMPACT 5000, 4&6 POS, SPRING TERMINAL	PLCH0002
23G	5	5069-RTB18-SPRING	ALLEN BRADLEY	COMPACT 5000, 18 POS, SPRING TERMINAL	PLCH0102,PLCH0152,PLCH0202,PLCH0302,PLCH0402
24	1	EA9-T15CL	AUTOMATION DIRECT	15" TOUCHSCREEN HMI	OIG0152
25A	1	194R-J200-1753	ALLEN BRADLEY	3PH FUSED DISCONNECT, 200A RATED	FUE0004
25B	1	194R-HM4	ALLEN BRADLEY	DISCONNECT HANDLE KIT, WITH CABLE	FUE0004
25C	3	JTD200ID	LITTELFUSE	J-SERIES FUSE, 200A RATED	FUE0004
26	1	LAMA1/0-14-QY	PANDUIT	GROUND LUG, #14-1/0AWG	
27	1	1492-PD32127	ALLEN BRADLEY	POWER DISTRIBUTION BLOCK, 3PH, 760A RATED, AL, (2) 1/0AWG LINE, (14)#14-#4AWG LOAD	DBE0006
27A	1	1492-PBC3	ALLEN BRADLEY	COVER KIT FOR 1492-PD32127	DBE0006
28	1	1489-M2C080	ALLEN BRADLEY	CIRCUIT BREAKER, MINIATURE, 2-POLE, 8A, 480/277VAC, C-TRIP, NO NEUTRAL	CBE0130
29	1	Y2000	SOLA	CONTROL XFMR, 240X480V PRI, 120V SEC, 2KVA, SBE SERIES, OPEN STYLE, COPPER WOUND	XFF0102
30	4	1489-M3C300	ALLEN BRADLEY	CIRCUIT BREAKER, MINIATURE, 3-POLE, 30A, 480/277VAC, C-TRIP, NO NEUTRAL	CBE0010,CBE0020,CBE0030,CBE0102
31	4	1489-M3C200	ALLEN BRADLEY	CIRCUIT BREAKER, MINIATURE, 3-POLE, 20A, 480/277VAC, C-TRIP, NO NEUTRAL	CBE0112,CBE0122,CBE0134,CBE0202
32	4	25B-D024N104	ALLEN BRADLEY	POWERFLEX 525, 480VAC, 3PH, EMBEDDED ETHERNET/IP, FRAME D, 11KW, 15HP	DRE0010,DRE0020,DRE0030,DRE0102
33	2	25B-D017N104	ALLEN BRADLEY	POWERFLEX 525, 480VAC, 3PH, EMBEDDED ETHERNET/IP, FRAME C, 7.5KW, 10HP	DRE0112,DRE0122

8519 JEFFERSON NE
ALBUQUERQUE, NM 87113
TEL: (505) 821-1801

JEFFREY L. JORGENSEN
NEW MEXICO
19288
03/21/23
PROFESSIONAL ENGINEER

PROJECT:
KAYENTA WWTP
HIGH-PERFORMANCE
POND SYSTEM
FINAL DESIGN

NAVAJO TRIBAL UTILITY AUTHORITY
PO BOX 170
FT. DEFIANCE, AZ 86504

WSP PROJECT No:
2151700011

REVISIONS

NO.	DATE	BY	APPROVED
RCA	20230324	RSB	PP

DESIGNED BY:	RSB
DRAWN BY:	RSB
CHECKED BY:	PP
APPROVED BY:	PP
DATE:	20230324

SHEET TITLE:
BILL OF MATERIALS

K-M03

SHEET NUMBER:	REV. #
K-M03	RCA

SHEET 21 OF 21 SHEETS

C:\I&C Solutions\2023 CAD\23-031 to 23-060\23-045 NTUA\KAYENTA\K-M03.dwg

3/21/2023 3:22:47 AM, PDF CREATED