SHIPROCK PINNACLE HOTEL & RESTAURANT

SHIPROCK, NEW MEXICO

100% CONSTRUCTION DOCUMENTS

ISSUED FOR CONSTRUCTION

NOVEMBER 3, 2023

DRAWING INDEX

GENERAL
G001 TITLE SHEET and DRAWING INDEX
G002 PROJECT INFORMATION
G003 CODE ANALYSIS
G101 SITE CODE PLAN
G102 LIFE SAFETY PLANS - HOTEL
G103 LIFE SAFETY PLAN - RESTAURANT
G501 ACCESSIBILITY DETAILS
7

CIVIL
C100 GENERAL NOTES
C200 DEMOLITION PLAN
C300 CIVIL SITE PLAN
C400 GRADING & DRAINAGE PLAN
C401 GRADING SECTIONS
C500 WATER PLAN
C501 SEWER PLAN & PROFILE
C600 OFFSITE IMPROVEMENT PLAN
C700 EROSION CONTROL PLAN
C800 CIVIL DETAILS
C801 CIVIL DETAILS
C802 CIVIL DETAILS
C810 WATER DETAILS
C811 WATER DETAILS
C820 SEWER DETAILS
C821 SEWER DETAILS
16

LANDSCAPE
L101 LANDSCAPE PLAN
L102 IRRIGATION PLAN
L103 DETAILS
L104 DETAILS
4

STRUCTURAL
S-001 ABBREVIATIONS AND LEGEND
S-002 GENERAL STRUCTURAL NOTES
S-003 GENERAL STRUCTURAL NOTES
S-101 FOUNDATION PLAN - HOTEL
S-102 FOUNDATION PLAN - RESTAURANT
S-111 HOTEL 2ND FLOOR FRAMING PLAN
S-112 HOTEL 3RD FLOOR FRAMING PLAN
S-113 HOTEL 4TH FLOOR FRAMING PLAN
S-114 LINTEL PLAN - RESTAURANT
S-121 ROOF FRAMING PLAN - HOTEL
S-122 LOW ROOF FRAMING PLAN - RESTAURANT
S-123 HIGH ROOF FRAMING PLAN - RESTAURANT
S-201 WALL ELEVATIONS
S-202 WALL ELEVATIONS
S-301 BUILDING SECTIONS - HOTEL
S-302 BUILDING SECTIONS - RESTAURANT
S-303 BUILDING SECTIONS - RESTAURANT
S-304 BUILDING SECTIONS - RESTAURANT
S-401 ENLARGED PLANS - HOTEL
S-402 STAIR FRAMING PLANS - HOTEL
S-501 FOUNDATION SECTION AND DETAILS
S-511 WOOD FRAMING DETAILS
S-512 MASONRY FRAMING DETAILS
S-521 MASONRY FRAMING SECTIONS AND DETAILS
S-601 SCHEDULES
S-602 SHEAR WALL ELEVATIONS
S-603 SHEAR WALL DETAILS
S-701 TYPICAL CONCRETE DETAILS
S-721 TYPICAL MASONRY DETAILS
S-731 TYPICAL STEEL CONNECTION DETAILS
S-741 TYPICAL STEEL CONNECTION DETAILS
31

ARCHITECTURAL
A001 OVERALL SITE PLAN
A002 SITE PLAN
A003 SITE DETAILS
A004 SITE DETAILS
A101 FLOOR PLANS - HOTEL - 1ST & 2ND FLOOR
A102 FLOOR PLANS - HOTEL - 3RD & 4TH FLOOR
A103 FLOOR & DIMENSION PLAN - RESTAURANT
A104 DIMENSION PLANS - HOTEL
A105 CLERESTORY DIMENSION PLAN - RESTAURANT
A107 PARTITION TYPES
A108 REFLECTED CEILING PLAN - HOTEL - 1ST & 2ND FLOORS
A109 REFLECTED CEILING PLAN - HOTEL - 3RD & 4TH FLOORS
A110 REFLECTED CEILING PLAN - RESTAURANT
A111 CLERESTORY REFLECTED CEILING PLAN - RESTAURANT
A112 CEILING DETAILS
A113 ROOF PLAN - HOTEL
A114 ROOF PLAN - RESTAURANT
A115 ROOF DETAILS
A201 EXTERIOR ELEVATIONS - HOTEL
A202 EXTERIOR ELEVATIONS - HOTEL
A203 EXTERIOR ELEVATIONS - RESTAURANT
A301 BUILDING SECTIONS - HOTEL
A302 BUILDING SECTIONS - HOTEL
A303 BUILDING SECTIONS - HOTEL - PORTE COCHÈRE
A304 BUILDING SECTIONS - RESTAURANT
A305 BUILDING SECTIONS - RESTAURANT
A306 WALL SECTIONS - HOTEL
A307 WALL SECTIONS - RESTAURANT
A308 WALL SECTIONS - RESTAURANT
A309 SECTION DETAILS
A310 PLAN DETAILS
A321 STAIR #1 & ELEVATOR SECTIONS AND PLANS - HOTEL
A322 STAIR #2 SECTION & PLANS - HOTEL
A401 KING 'A' & 'C' PLANS & ELEVATIONS
A402 KING ADA 'B' PLANS & INTERIOR ELEVATIONS
A403 DOUBLE QUEEN 'A & C' PLANS & INTERIOR ELEVATIONS
A404 DOUBLE QUEEN ADA 'B' PLANS & ELEVATIONS - HOTEL
A405 LARGE SCALE PLAN - HOTEL - 1ST FLOOR
A406 INTERIOR ELEVATIONS - HOTEL
A407 INTERIOR ELEVATIONS - HOTEL
A408 INTERIOR ELEVATIONS - RESTAURANT
A409 INTERIOR ELEVATIONS - RESTAURANT
A410 CASEWORK RECEPTION DETAILS
A411 CASEWORK HOST STATION DETAILS
A501 CASEWORK SECTIONS
A502 DOOR DETAILS
A503 WINDOW DETAILS
A601 DOOR SCHEDULES
A602 DOOR AND WINDOW TYPES
49

INTERIORS
ID101 1ST & 2ND FINISH FLOOR PLANS - HOTEL
ID102 3RD & 4TH FINISH FLOOR PLANS - HOTEL
ID103 FINISH FLOOR PLAN - RESTAURANT
ID104 SIGNAGE PLAN - HOTEL
ID105 SIGNAGE PLAN - HOTEL
ID106 SIGNAGE PLAN - RESTAURANT
ID201 SIGNAGE SCHEDULES, TYPES AND MOUNTING
ID401 LARGE SCALE FINISH PLANS (PUBLIC AREAS)
ID601 MATERIAL SCHEDULE AND DETAILS
ID701 FURNITURE PLAN - HOTEL - 1ST & 2ND FLOORS
ID702 FURNITURE PLAN - HOTEL - 3RD & 4TH FLOORS
ID703 FURNITURE PLAN - RESTAURANT
12

FOOD SERVICE
Q101 EQUIPMENT PLAN AND SCHEDULE
Q201 EQUIPMENT ELECTRICAL ROUGH-IN PLAN
Q301 EQUIPMENT PLUMBING ROUGH-IN PLAN
Q401 EQUIPMENT MECHANICAL PLAN
Q402 EQUIPMENT EXHAUST HOODS
Q403 EQUIPMENT EXHAUST HOODS
Q404 EQUIPMENT EXHAUST HOODS
Q405 EQUIPMENT EXHAUST HOODS
Q501 EQUIPMENT SPECIAL CONDITIONS PLAN
Q502 EQUIPMENT SPECIAL CONDITIONS PLAN
Q601 EQUIPMENT ELEVATIONS
Q701 FOOD SERVICE GENERAL NOTES
12

FIRE PROTECTION
F100 FIRE PROTECTION NOTES
F101 FIRST & SECOND HOTEL FLOOR FIRE PROTECTION PLAN
F102 THIRD & FOURTH HOTEL FLOOR FIRE PROTECTION PLAN
F103 RESTAURANT FIRE PROTECTION PLAN
F200 FIRE ALARM NOTES
F201 FIRST & SECOND HOTEL FLOOR FIRE ALARM
F202 THIRD & FOURTH HOTEL FLOOR FIRE ALARM
F203 RESTAURANT FIRE ALARM PLAN
8

PLUMBING
P000 PLUMBING COVERSHEET
P101 PLUMBING WASTE & VENT PLANS
P102 THIRD & FOURTH FLOOR PLUMBING WASTE & VENT PLAN
P104 FIRST & SECOND FLOOR PLUMBING DOMESTIC WATER PLAN
P105 THIRD & FOURTH FLOOR PLUMBING DOMESTIC WATER PLAN
P106 PLUMBING WASTE & VENT - RESTAURANT
P107 PLUMBING DOMESTIC WATER - RESTAURANT
P112 PLUMBING ROOF PLAN - HOTEL
P113 PLUMBING ROOF PLAN - RESTAURANT
P401 PLUMBING ENLARGED PLANS
P402 PLUMBING ENLARGED PLANS
P403 PLUMBING ENLARGED PLANS
P500 PLUMBING DETAILS AND DIAGRAMS - RESTAURANT
P501 PLUMBING DETAILS
P502 PLUMBING DETAILS
P503 PLUMBING DIAGRAMS
P504 PLUMBING ISOMETRICS
P505 PLUMBING ISOMETRICS
P506 PLUMBING ISOMETRICS
P600 PLUMBING SCHEDULES
20

MECHANICAL
M000 VENTILATION COVERSHEET
M101 FIRST & SECOND FLOOR MECHANICAL PLAN - HOTEL
M102 THIRD & FOURTH FLOOR MECHANICAL PLAN - HOTEL
M103 MECHANICAL PLAN - RESTAURANT
M104 FIRST & SECOND FLOOR PIPING PLAN - HOTEL
M105 THIRD & FOURTH FLOOR PIPING PLAN - HOTEL
M106 MECHANICAL PIPING PLAN - RESTAURANT
M112 MECHANICAL ROOF PLAN - HOTEL
M114 MECHANICAL ROOF PLAN - RESTAURANT
M400 MECHANICAL UNIT PLANS - HOTEL
M500 MECHANICAL DETAILS
M501 MECHANICAL DETAILS
M502 MECHANICAL DETAILS
M503 MECHANICAL DETAILS
M504 MECHANICAL CAPTIVEAIRE DRAWINGS
M505 MECHANICAL CAPTIVEAIRE DRAWINGS
M506 MECHANICAL CAPTIVEAIRE DRAWINGS
M600 MECHANICAL SCHEDULES
M601 MECHANICAL SCHEDULES
M602 MECHANICAL SCHEDULES
M603 MECHANICAL SCHEDULES
21

ELECTRICAL
E000 ELECTRICAL COVERSHEET
E001 ELECTRICAL SITE PLAN
E101 FIRST & SECOND FLOOR ELECTRICAL LIGHTING PLAN
E102 THIRD & FOURTH FLOOR ELECTRICAL LIGHTING PLAN
E103 FIRST & SECOND FLOOR ELECTRICAL POWER PLAN
E104 THIRD & FOURTH FLOOR ELECTRICAL POWER PLAN
E105 ELECTRICAL LIGHTING PLAN - RESTAURANT
E106 ELECTRICAL POWER PLAN - RESTAURANT
E112 ELECTRICAL ROOF PLAN - HOTEL
E113 ELECTRICAL ROOF PLAN - RESTAURANT
E400 ENLARGED POWER PLAN - RESTAURANT
E401 ELECTRICAL UNIT PLANS
E402 ELECTRICAL UNIT PLANS
E403 ELECTRICAL ENLARGED PLANS
E500 ELECTRICAL RISER DIAGRAM - HOTEL
E501 ELECTRICAL RISER DIAGRAM - RESTAURANT
E502 ELECTRICAL PANEL SCHEDULES - HOTEL
E503 ELECTRICAL PANEL SCHEDULES - HOTEL
E504 ELECTRICAL PANEL SCHEDULES - HOTEL
E505 ELECTRICAL PANEL SCHEDULES - HOTEL
E506 ELECTRICAL PANEL SCHEDULES - RESTAURANT
E507 ELECTRICAL PANEL SCHEDULES - RESTAURANT
E508 ELECTRICAL LIGHTING SCHEDULES - HOTEL
E509 ELECTRICAL LIGHTING SCHEDULES - RESTAURANT
24

TOTAL SHEETS: 204

STAMP

DYRON MURPHY ARCHITECTS, P.C.

4505 Montbel Place NE, Albuquerque, New Mexico 87107

SHIPROCK PINNACLE HOTEL & RESTAURANT

SHIPROCK, NEW MEXICO

100% CONSTRUCTION DOCUMENTS

ISSUED FOR CONSTRUCTION

NOVEMBER 3, 2023

PROJECT NUMBER	DRAWN BY	PROJ MGR
2022.10	Author	Designer

TITLE SHEET and DRAWING INDEX

Sheet Title

Sheet Number G001 of

11/6/2023 11:58:09 AM C:\Revit Local\Shiprock Pinnacle_Site_R23_jkelbaugh_dm-architects_cen.rvt
DYRON MURPHY ARCHITECTS, P.C.

ALTERNATES

ALTERNATE 1:
BASE BID: ENTIRE PROJECT (HOTEL BUILDING, RESTAURANT BULIDING AND SITE)

ALTERNATE BID #1: HOTEL BUILDING AND ASSOCIATED SITE

ALTERNATE BID #2: RESTAURANT BUILDING AND ASSOCIATED SITE

GENERAL NOTES

1. CONTRACTOR SHALL COORDINATE ALL CONTRACT DRAWINGS AND SPECIFICATIONS FOR COORDINATION OF ALL SITE AND BUILDING COMPONENTS.
2. CONTRACTOR SHALL PROVIDE COORDINATION DRAWINGS AS PART OF SUBMITTAL PROCESS AND IS RESPONSIBLE FOR ACCURACY AND COMPLETENESS OF DOCUMENTS.
3. DRAWINGS SHALL NOT BE SCALED FOR DIMENSIONS NOT PROVIDED. IF ADDITIONAL DIMENSIONS ARE REQUIRED, NOTIFY ARCHITECT.
4. CONTRACTOR SHALL VERIFY ALL EXISTING SITE CONDITIONS AND DIMENSIONS PRIOR TO CONSTRUCTION.
5. CONTRACTOR SHALL NOTIFY ARCHITECT IMMEDIATELY OF ANY ERRORS, OMISSIONS OR CONFLICTS IN THE CONSTRUCTION DOCUMENTS.
6. ALL MANUFACTURER'S INSTALLATION INSTRUCTIONS, ASTM STANDARDS AND ICBO AND ICC ER REPORTS SHALL BE PROVIDED TO THE INSPECTOR AT THEIR REQUEST AND AT THE TIME OF INSPECTION.
7. CONTRACTOR SHALL COORDINATE ALL MATERIALS AND TRADES WITH THE LIFE SAFETY PLAN. IN THE CASE OF ANY DISCREPANCIES IN FIRE-RESISTANCE, SMOKE-RESISTANCE OR OTHER LIFE SAFETY FACTOR, THE MOST RESTRICTIVE SHALL GOVERN.
8. ALL MATERIALS USED IN RATED ASSEMBLIES SHALL BEAR THE UL CLASSIFICATION MARK AS REQUIRED BY THE UL DESIGN OF THE ASSEMBLY IN WHICH THEY OCCUR.
9. ALL ASSEMBLIES AND PENETRATIONS TO BE COORDINATED WITH RATINGS INDICATED IN CODE ANALYSIS/ LIFE SAFETY PLANS. CONTRACTOR TO PROVIDE UL RATED ASSEMBLIES AS REQUIRED. CONTRACTOR TO PROVIDE UL RATINGS IN SUBMITTALS FOR ALL PENETRATIONS AS REQUIRED.
10. CONTRACTOR SHALL COORDINATE WITH MANUFACTURER REQUIREMENTS FOR PROPER INSTALLATION OF ALL MATERIALS AND COMPONENTS.

ABBREVIATIONS

A.F.F	ABOVE FINISHED FLOOR	N/A	NOT APPLICABLE
AL.	ALUMINUM	N/C	NON-COMBUSTIBLE
BM.	BEAM	N.I.C.	NOT IN CONTRACT
℄	CENTER LINE	NR.	NON-RATED
CLR.	CLEAR	N.T.S.	NOT TO SCALE
CONT.	CONTINUOUS	O.A.E.	OR APPROVED EQUAL
DIA.	DIAMETER	O.C.	ON CENTER
EQ.	EQUAL	OPP.	OPPOSITE
F.E.	FIRE EXTINGUISHER	REQ'D.	REQUIRED
F.E.C.	FIRE EXTINGUISHER CABINET	S.F.	SQUARE FOOT
		SIM.	SIMILAR
F.F.	FINISHED FLOOR	S.S.	STAINLESS STEEL
GA.	GALVANIZED	STL.	STEEL
G.S.F.	GROSS SQUARE FOOT	T.B.D.	TO BE DETERMINED
H.M.	HOLLOW METAL	T.O.P.	TOP OF PARAPET
HR.	HOUR	T.O.W.	TOP OF WALL
JST.	JOIST	TYP.	TYPICAL
MAX.	MAXIMUM	U.N.O.	UNLESS NOTED OTHERWISE
MIN.	MINIMUM	V.I.F.	VERIFY IN FIELD
MTL.	METAL		

DEFERED SUBMITTALS

1. FIRE SPRINKLER SYSTEM
2. FIRE ALARM SYSTEM
3. DOOR HARDWARE
4. ROOF JOISTS AND TRUSSES
5. SUSPENDED CEILINGS - STRUCTURAL ENGINEERING & CALCULATIONS
6. IRRIGATION SYSTEM

SYMBOLS LEGEND

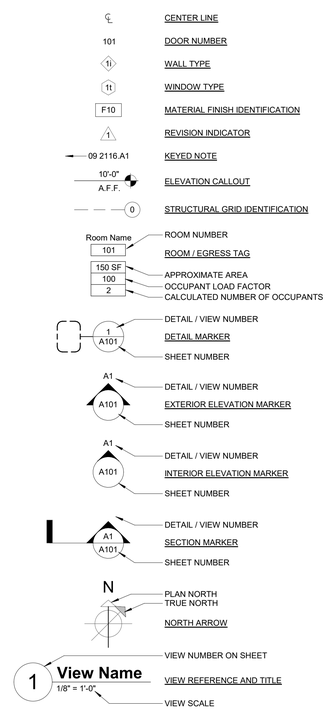

PROJECT TEAM

OWNER

NAVAJO NATION HOSPITALITY ENTERPRISE
6677 West Thunderbird Road #J176
Glendale, Arizona 85306
Tel. (623) 412-0297

ARCHITECT

DYRON MURPHY ARCHITECTS, P.C.
4505 Montbel Pl, NE
Albuquerque, NM 87107
Tel. (505) 830-0203

ARCHITECTURAL CONSULTANT

ARCHITECTS STUDIO, LLC
7400 Montgomery Blvd NE, Suite 36
Albuquerque, NM 87109
Tel. (505) 889-3030

CIVIL ENGINEER

HOZHO ENGINEERING, LLC
2733 E. Lakin Drive Suite #2
Flagstaff, Arizona 86004
Tel. (928) 864-7198

STRUCTURAL ENGINEER

CHAVEZ-GRIEVES CONSULTING ENGINEERS, INC.
4700 Lincoln Road NE
Albuquerque, New Mexico 87109
Tel. (505) 344-4080

FIRE PROTECTION

VERITAS FIRE ENGINEERING, INC.
12364 West Alameda Parkway, Ste. 135
Lakewood, Colorado 80228
Tel. (303) 985-3300

PLUMBING, MECHANICAL & ELECTRICAL ENGINEER

IMEG CORPORATION
9000 East Pima Center Parkway, #320
Scottsdale, Arizona 85258
Tel. (480) 566-2273

FOOD SERVICES CONSULTANT

LANDMARK KITCHEN DESIGN, LLC
1900 W. Chandler Blvd Ste. 15-373
Chandler, Arizona 85224
Tel. (602) 443-0344

LOCATION

REGION MAP

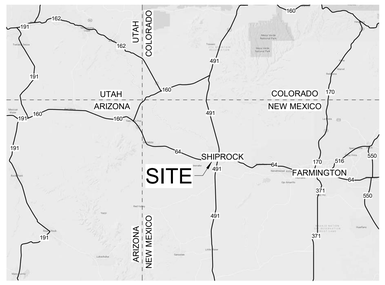

VICINITY MAP

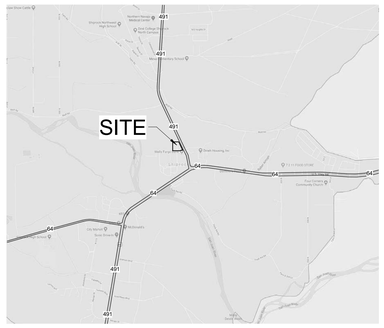

STAMP

DYRON MURPHY ARCHITECTS, P.C.

4505 Montbel Place NE, Albuquerque, New Mexico 87107

SHIPROCK PINNACLE HOTEL & RESTAURANT

SHIPROCK, NEW MEXICO

100% CONSTRUCTION DOCUMENTS

ISSUED FOR CONSTRUCTION

NOVEMBER 3, 2023

PROJECT NUMBER	DRAWN BY	PROJ MGR
2022.10	Author	Designer

PROJECT INFORMATION

Sheet Title

Sheet Number of

G002

11/6/2023 7:39:04 AM C:\Revit Local\Shiprock Pinnacle_Site_R22_dlesbauch_dm-architects_com.rvt
DYRON MURPHY ARCHITECTS, P.C.

CODE ANALYSIS - HOTEL

Applicable Standards:
- 2015 New Mexico Commercial Building Code (NMCBC)
- 2021 New Mexico Mechanical Code
- 2021 New Mexico Plumbing Code
- 2018 IFC - International Fire Code
- 2018 IECC - International Energy Conservation Code
- 2017 New Mexico Electric Code
- 2018 IFGC - International Fuel Gas Code
- 2009 ICC/ANSI A117.1- Accessible and Usable Buildings and Facilities

NFPA (National Fire Protection Association) Codes:
- 10 Portable Fire Extinguishers
- 13 Installation of Sprinkler Systems
- 20 Installation of Stationary Pumps for Fire Protection
- 24 Installation of Private Fire Service Mains and Their Appurtenances
- 72 National Fire Alarm and Signaling Code
- 80 Fire Doors and Other Opening Protectives

Building Criteria:

Total Gross Floor Area (all stories):	47,760 GSF
1. Ground Floor:	11,713 GSF
2. Second Floor:	11,621 GSF
3. Third Floor:	11,621 GSF
4. Fourth Floor:	11,621 GSF
5. Roof overhangs:	1,184 GSF

Type of Construction (IBC chapter 6): 5-A
1-HR Combustible
Number of Stories: 4
Total building height (ft.): 51'

Automatic Sprinkler System: S
S = NFPA 13 sprinkler system (903.3.1.1)

Primary Occupancy: R-1
Residential, Transient; E.g. Hotels, Motels

For mixed occupancy, the above is the most restrictive occupancy for the purposes of determining height, area, and fire-protection requirements. See below for details about mixed occupancies, if applicable.

Applicable energy code (IECC edition): 2018
Climate Zone: 5B
B = Dry (west)

Total Building Perimeter (P):	555 L.F.
Building Perimeter that fronts on a public way (F):	555 L.F.
Fire Separation Distance (worst-case instance):	13 L.F.
Measured common path of travel (worst-case instance):	95' L.F.
Total calculated number of building occupants:	324

Use and Occupancy Classification (NMCBC Chapter 3):

A. Occupancy Classifications:
   - Group "R-1" Residential
     1. Hotels, Motels
   - Group "A-3" Assembly
     1. Lobby

B. Incidental & accessory occupancies (no separation required):
   - Group "B" Business
     1. Offices, reception, laundry, and similar spaces.
   - Group "S-1" Storage
     1. Various accessory storage spaces throughout.

Mixed occupancy:
1. Building is classified as a separated occupancy per Section 508.
2. No separation is required between accessory occupancies and the main occupancy Exception 2: Group I-1, R-1, R-2 and R-3 dwelling units and sleeping units shall be separated from other dwelling or sleeping units and from accessory occupancies contiguous to them in accordance with the requirements of Section 420.
3. 1-hour fire-rated separation required between "R-1" and "A-3" occupancies per Table 508.4.

Refer to general/code floor plans for specific space uses.

Special Detailed Requirements based on Use and Occupancy (NMCBC chapter 4):

420 - Group I-1 and R occupancies
- A. 420.2 - Walls separating sleeping units in the same building from other occupancies contiguous to them in the same building shall be constructed as fire partitions in accordance with Section 708.
- B. 420.3 - Floor assemblies separating sleeping units in the same building and floor assemblies separating sleeping units from other occupancies contiguous to them in the same building shall be constructed as horizontal assemblies in accordance with Section 711.
- C. 420.5 - Group R occupancies shall be equipped throughout with an automatic sprinkler system in accordance with Section 903.2.8.
- D. 420.6 - Fire alarm systems and smoke alarms shall be provided in Group R-1 occupancies in accordance with Sections 907.2.8.

General Building Heights and Areas (NMCBC Chapter 5):

Occupancy:	Group R-1 (Floors 2-4)
Maximum building height (Table 504.3):	70
Maximum number of stories (Table 504.4):	4
Maximum area allowed in each story (506.2):	45,000
Aggregate maximum area of all stories:	135,000

Calculation steps:
- *Equation 5-1: Aa = At + (NS x If)* — *45,000 = 36,000 + (12,000 x 0.75)*
- *Equation 5-2: Aa = [At + (NS x If)] x Sa* — *135,000 = [36,000 + (12,0000 x 0.75)] x 3*
- *Equation 5-4: If = [F/P -0.25] x W/30* — *0.75 = [555/555 -0.25] x 30/30*

At	*36,000*	*Tabular allowable area factor (Table 506.2)*
NS	*12,000*	*Tabular area factor (Table 506.2) for non-sprinklered buildings*
If	*75%*	*Area factor increase due to frontage (%) (506.3)*
Sa	*3*	*Actual number of stories above grade level (not to exceed 3)*
W	*30*	*Calculated width of public way or open space (>30')*

The following are for ground floor calculations

Separated mixed occupancy calculations (508.4.2):

Occupancy	Area (sf)	Ratio	Within limit?	Accessory? (<10%)	# Occ.
R-1	4,585	0.102	Yes	No	23
A-3	6,896	0.160	Yes	No	136

11,481	Total combined 1st floor area (sum of occupancies above)
0.26	Sum of ratios (cannot exceed 1 per 508.4.2)
159	Total # of 1st floor occupants

Required separation of occupancies (Table 508.4, simplified)
Fire rating in hours between separated occupancies:

	A-3	R-1
A-3	0	1
R-1	-	0

Total # of building occupants: 321

Types of Construction (NMCBC Chapter 6):

		Rating	Design No.
Primary structural frame	supporting more than 1 floor/roof above	1 Hour	
	supporting only a roof	1 Hour	
Exterior bearing walls		1 Hour	UL Design U356
Interior bearing walls	supporting more than 1 floor/roof above	1 Hour	UL Designs U311 & U305
	supporting only a roof	1 Hour	UL Designs U311 & U305
Floor / ceiling (truss) assembly		1 Hour	UL Design L563
Floor / ceilng		1 Hour	Calculated Method (2x10)
			Calculated Method (2x8)
Roof / ceiling (truss)		1 Hour	UL Design P533
Roof / ceiling assembly		1 Hour	Calculated Method (2x10)
			Calculated Method (2x8)

Fire-rating of exterior walls based on fire-separation distance (Table 602):
1 HR fire-resistance rating.

Fire and Smoke Protection Features (NMCBC Chapter 7:
Partition types included in this project:
705 - Fire-rated exterior walls
Primary structural frame & Exterior bearing walls per chapter 6
707 - Fire Barriers
Elevator shafts, Exit stair walls, Occupancy Separation
708 - Fire Partitions
Walls separating sleeping units.
711 - Fire-rated floor and roof assemblies
Horizontal assemblies between dwelling units on adjacent floors.

Refer to door schedule, door types, and window types for fire-rated opening protectives. Refer to mechanical plans for fire-dampers and/or fire-smoke dampers.

Projections, such as awnings or balconies (Table 705.2):

13	Fire separation distance. (feet)
40	Minimum distance from line used to determine FSD. (inches)
116	Maximum projection length. (inches)

Allowable area of openings in fire-rated exterior walls
% of exterior wall, per story (Table 705.8)
- 45% Unprotected openings
- 45% Protected openings

Interior Finishes (NMCBC Chapter 8):
Interior finish requirements per Table 803.11:

Occupancy R-1	Material class	Flame spread index
Interior exit stairways and ramps and exit passageways	B	75 or less
Corridors and enclosure for exit access stairways and ramps	C	200 or less
Rooms and enclosed spaces	C	200 or less

Occupancy A-3	Material class	Flame spread index
Interior exit stairways and ramps and exit passageways	B	75 or less
Corridors and enclosure for exit access stairways and ramps	B	75 or less
Rooms and enclosed spaces	C	200 or less

Fire Protection Systems (NMCBC chapter 9):
Occupancy: R-1
For mixed occupancy, the above is the most restrictive occupancy for the purposes of determining fire-protection requirements.

Automatic sprinkler system requirements listed in Section 903:
Required for any of the following conditions:
1. An automatic sprinkler system installed in accordance with Section 903.3 shall be provided throughout all buildings with a Group R fire area.

In ALL occupancies other than Group U, an automatic sprinkler system is required for specific hazards. See section 903.2.11 for details.
Hazards include: Stories without openings, rubbish and linen chutes, buildings 55 feet or more in height, hazardous exhaust ducts, commercial kitchen exhaust hoods.

Means of Egress (NMCBC chapter 10):
Refer to life safety plan for specific egress conditions such as individual space occupant loads, exit access arrangement, travel distances, etc. The following are general requirements for the primary occupancy.

2	Minimum number of Exits or exit access (Tables 1006.2.1 & 1006.3.1)
250 feet	Maximum exit access travel distance (1017.2)
0.5	Minimum corridor fire-rating (hours). (Table 1020.1)
44 inches	Minimum corridor width, based on occupant load (1020.2)
50 feet	Maximum length of dead-ends (1020.4)

Special corridor width requirements:
36 inches Within a dwelling unit:

Accessibility (NMCBC chapter 11):
Refer to floor plans and site plans for specific conditions such as changes in level, clearances, grab bars, etc.

Energy Efficiency (IECC as referenced by NMCBC Chapter 13):
See detailed notes for Energy Code Compliance.

Exterior Walls (NMCBC Chapter 14):
See building sections, details, and specifications for compliance with wall covering requirements.

Section 1405.3 Vapor Retarders for climate zone: 5B
Class I or II vapor retarder REQUIRED on interior side of frame walls.

Class III vapor retarder permitted for:
- *Vented cladding over wood structural panels.*
- *Vented cladding over fiberboard.*
- *Vented cladding over gypsum.*
- *Continuous insulation with R-value ≥ R5 over 2x4 wall.*
- *Continuous insulation with R-value ≥ R7.5 over 2x6 wall.*

Vapor Retarder Class Descriptions:

Class	*Material*	*Perm rating*
1	*Sheet polyethylene, nonperforated aluminum foil.*	*≤ 0.1*
2	*Kraft-faced fiberglass batts or paint.*	*> 0.1 and ≤ 1*
3	*Latex or enamel paint.*	*> 1 and ≤ 10*

Roof Assemblies and Rooftop Structures (NMCBC Chapter 15):
Refer to roof plan for drainage, emergency overflow, and roof types.
Required roof classification per Table 1505.1: B

Structural provisions (IBC Chapters 16 thru 23):
Refer to structural drawings for compliance calculations and required special inspections.

Plumbing Fixture Requirements (NMCBC chapter 29):
Fixture counts for mixed-occupancy buildings:

Plumbing fixture requirements by occupancy (Table 2902.1):

Occupancy:	A-3	R-1
WC (m):	1 per 125	1 per sleeping unit
WC (f):	1 per 65	1 per sleeping unit
Lav (m):	1 per 200	1 per sleeping unit
Lav (f):	1 per 200	1 per sleeping unit
Showers:	-	1 per sleeping unit
D.F.:	1 per 500	-
Other:	1 Service Sink	1 Service Sink

Required plumbing fixtures by occupancy (before rounding):

Occupancy:	A-3	R-1	TOTALS
Occupants:	139	185	324
Male or female:	70	93	162
Required fixtures			
WC (m):	0.56	1 per sleeping unit	
WC (f):	1.08	1 per sleeping unit	
Lav (m):	0.35	1 per sleeping unit	
Lav (f):	0.35	1 per sleeping unit	
Showers:	-	1 per sleeping unit	
D.F.:	0.05	-	

Fixtures:	Required:	Provided:
Male Toilets	1	1
Female Toilets	2	1*
Male lavatories	1	1
Female Lavatories	1	1
Showers / Tubs	0	0
Drinking Fountains	1	2
Other fixtures required:	1 Service Sink	1 Service Sink

* In addition to the fixtures listed above, 1 unisex restroom is also provided

Discipline-specific compliance (Various standards):
Refer to Plumbing, Mechanical, and Electrical drawings for compliance with plumbing, mechanical, and electrical codes.

ROOM COUNT & ACCESSIBLE SCHEDULE - HOTEL

ROOM TABULATIONS	
Single King -	24
Single King ADA -	2
Single King C.F. -	4
Double Queen -	47
Double Queen ADA -	3
Double Queen C.F. -	5
TOTAL	85

ROOMS WITH MOBILITY FEATURES PER ADA ACCESSIBLITY GUIDELINES

TOTAL # OF ROOMS	REQUIRED	PROVIDED
76 to 100	4 1 ROLL-IN SHOWER	4 1 ROLL-IN SHOWER
TOTAL ACCESSIBLE ROOMS REQUIRED	5	5

ROOMS WITH COMMUNICATION FEATURES (C.F.) PER ADA ACCESSIBLITY GUIDELINES

TOTAL # OF ROOMS	REQUIRED C.F.	PROVIDED C.F.
76 to 100	9	9

CODE ANALYSIS - RESTAURANT

Applicable Standards:
- 2015 New Mexico Commercial Building Code (NMCBC)
- 2021 New Mexico Mechanical Code
- 2021 New Mexico Plumbing Code
- 2018 IFC - International Fire Code
- 2018 IECC - International Energy Conservation Code
- 2017 New Mexico Electric Code
- 2018 IFGC - International Fuel Gas Code
- 2009 ICC/ANSI A117.1- Accessible and Usable Buildings and Facilities

NFPA (National Fire Protection Association) Codes:
- 10 Portable Fire Extinguishers
- 13 Installation of Sprinkler Systems
- 20 Installation of Stationary Pumps for Fire Protection
- 22 Water Tanks for Private Fire Protection
- 24 Installation of Private Fire Service Mains and Their Appurtenances
- 72 National Fire Alarm and Signaling Code
- 80 Fire Doors and Other Opening Protectives

Building Criteria:

Total Gross Floor Area (all stories):	15,682 GSF
1. Ground Floor:	13,050GSF
2. Roof overhangs:	2,632 GSF

Type of Construction (NMCBC Chapter 6): V-B
Non-rated, Combustible
Number of Stories: 1
Total building height (ft.): 24'

Automatic Sprinkler System: S
S = NFPA 13 sprinkler system (903.3.1.1)

Primary Occupancy: A2
Assembly, uses intended for food and/or drink consumption. E.g. Restaurants, Banquet Halls
Occupancy subcategory (for plumbing fixture req.) A2-b
Restaurants, Banquet Halls, and Food Courts

For mixed occupancy, the above is the most restrictive occupancy for the purposes of determining height, area, and fire-protection requirements. See below for details about mixed occupancies, if applicable.

Applicable energy code (IECC edition): 2018
Climate Zone: 5B
B = Dry (west)

Total Building Perimeter (P):	535 L.F.
Building Perimeter that fronts on a public way (F):	378 L.F.
Fire Separation Distance (worst-case instance):	17 L.F.
Measured common path of travel (worst-case instance):	41 L.F.
Total calculated number of building occupants:	472

Use and Occupancy Classification (NMCBC Chapter 3):
- Group "A-2" Assembly
  1. Restaurants, Banquet Halls
- Group "B" Business
  1. Offices, reception, and similar spaces.
- Group "S-1" Storage
  1. Various accessory storage spaces throughout.

Mixed occupancy:
1. Building is classified as a NON-separated mixed occupancy per Section 508.
2. NO fire-rated separation required between non-separated occupancies.
3. The most restrictive requirements of Chapter 5 and Chapter 9 are applied to the entire building.

Refer to general/code floor plans for specific space uses.

Special Detailed Requirements based on Use and Occupancy (IBC chapter 4):
Special detailed requirements based on Use and Occupancy do not apply to this buildnig

General Building Heights and Areas (NMCBC Chapter 5):

Occupancy:	Group A-2
Maximum building height (Table 504.3):	60
Maximum number of stories (Table 504.4):	2
Maximum area allowed in each story (506.2):	26,742
Aggregate maximum area of all stories:	N/A

Calculation steps:
- *Equation 5-1: Aa = At + (NS x If)* — *26,742 = 24,000 + (6000 x 0.457)*
- *Equation 5-4: If = [F/P -0.25] x W/30* — *0.457 = [535/378 -0.25] x 30/30*

At	*24,000*	*Tabular allowable area factor (Table 506.2)*
NS	*6,000*	*Tabular area factor (Table 506.2) for non-sprinklered buildings*
If	*45.7%*	*Area factor increase due to frontage (%) (506.3)*
Sa	*1*	*Actual number of stories above grade level (not to exceed 3)*
W	*30*	*Calculated width of public way or open space (>30')*

A. This building is a non-separated mixed use occupancy. Includes Assembly (Restaurant and Banquet Hall), Business (Offices) and, Storage

Types of Construction (NMCBC Chapter 6):

		Rating (hours)
Primary structural frame	supporting more than 1 floor/roof above	0
	supporting only a roof	0
Exterior bearing walls		0
Interior bearing walls	supporting more than 1 floor/roof above	0
	supporting only a roof	0
Floor construction and secondary members		0
Roof construction and secondary members		0

Fire-rating of exterior walls based on fire-separation distance (Table 602):
0 HR fire-resistance rating.

Fire and Smoke Protection Features (NMCBC Chapter 7):
Partition types included in this project:
707 - Fire Barriers
Wall separating Mechancial and Electrical rooms from the rest of the buidling. This separation is provided as an additional safety measure above code minimum requirements.

Refer to door schedule, door types, and window types for fire-rated opening protectives. Refer to mechanical plans for fire-dampers and/or fire-smoke dampers.

Projections, such as awnings or balconies (Table 705.2):

17	Fire separation distance. (feet)
40	Minimum distance from line used to determine FSD. (inches)
164	Maximum projection length. (inches)

Allowable area of openings in fire-rated exterior walls
% of exterior wall, per story (Table 705.8)
- 75% Unprotected openings
- 75% Protected openings

Exterior walls with no fire rating requirement may have 100% unprotected openings.

Interior Finishes (NMCBCChapter 8):
Interior finish requirements per Table 803.11:

	Material class	Flame spread index
Interior exit stairways and ramps and exit passageways	C*	200 or less
Corridors and enclosure for exit access stairways and ramps	B	75 or less
Rooms and enclosed spaces	C	200 or less

*See footnote 'b'

Fire Protection Systems (NMCBC chapter 9):
Occupancy: A-2
For mixed occupancy, the above is the most restrictive occupancy for the purposes of determining fire-protection requirements.

Automatic sprinkler system requirements listed in Section 903:
Required for any of the following conditions:
1. Fire area exceeds 5,000 S.F.
2. Fire area has an occupant load of 100 or more.

In ALL occupancies other than Group U, an automatic sprinkler system is required for specific hazards. See section 903.2.11 for details.
Hazards include: Stories without openings, rubbish and linen chutes, buildings 55 feet or more in height, hazardous exhaust ducts, commercial kitchen exhaust hoods.

Means of Egress (NMCBC Chapter 10):
Refer to life safety plan for specific egress conditions such as individual space occupant loads, exit access arrangement, travel distances, etc. The following are general requirements for the primary occupancy.

2	Minimum number of Exits or exit access (Tables 1006.2.1 & 1006.3.1)
250 feet	Maximum exit access travel distance (Table 1017.2)
0	Minimum corridor fire-rating (hours). (Table 1020.1)
20 feet	Maximum length of dead-ends (1020.4)
44 inches	Minimum corridor width, based on occupant load (1020.2)

Accessibility (NMCBC Chapter 11):
Refer to floor plans and site plans for specific conditions such as changes in level, clearances, grab bars, etc.

Energy Efficiency (IECC as referenced by NMCBC Chapter 13):
See detailed notes for Energy Code Compliance.

Exterior Walls (NMCBC Chapter 14):
See building sections, details, and specifications for compliance with wall covering requirements.

Section 1405.3 Vapor Retarders for climate zone: 5B
Class I or II vapor retarder REQUIRED on interior side of frame walls.

Class III vapor retarder permitted for:
- *Vented cladding over wood structural panels.*
- *Vented cladding over fiberboard.*
- *Vented cladding over gypsum.*
- *Continuous insulation with R-value ≥ R5 over 2x4 wall.*
- *Continuous insulation with R-value ≥ R7.5 over 2x6 wall.*

Vapor Retarder Class Descriptions:

Class	*Material*	*Perm rating*
1	*Sheet polyethylene, nonperforated aluminum foil.*	*≤ 0.1*
2	*Kraft-faced fiberglass batts or paint.*	*> 0.1 and ≤ 1*
3	*Latex or enamel paint.*	*> 1 and ≤ 10*

Roof Assemblies and Rooftop Structures (NMCBC Chapter 15):
Refer to roof plan for drainage, emergency overflow, and roof types.
Required roof classification per Table 1505.1: C

Structural provisions (NMCBC Chapters 16 thru 23):
Refer to structural drawings for compliance calculations and required special inspections.

Plumbing Fixture Requirements (NMCBC chapter 29):
Fixture counts for single-occupancy buildings:

Occupancy: A-2
Subcategory: A2-b
Restaurants, Banquet Halls

Total building occupants: 472
Male or Female: 236

Fixture ratios/requirements per NMCBC Table 2902.1:

Male Toilets	1 per 75
Female Toilets	1 per 75
Male lavatories	1 per 200
Female Lavatories	1 per 200
Showers / Tubs	0
Drinking Fountains	1 per 500
Other fixtures required	1 service sink

Fixtures:	Required:	Provided:
Male Toilets	4	3 W.C. 1 Urinal
Female Toilets	4	4
Male lavatories	2	2
Female Lavatories	2	2
Showers / Tubs	0	0
Drinking Fountains	1	2
Other fixtures required	1 service sink	2 service sinks

In addition to the fixtues provided listed above, 1 unisex restroom is also provided.

Discipline-specific compliance (Various standards):
Refer to Plumbing, Mechanical, and Electrical drawings for compliance with plumbing, mechanical, and electrical codes.

ENERGY CODE COMPLIANCE

Energy Efficiency (IECC as referenced by NMCBC Chapter 13):
IECC edition in use: 2018

Inspections required:
- 105.2.1 - Footing and Foundation Insulation
  R-value, location, thickness, burial depth, and protection.
- 105.2.2 - Thermal Envelope
  R-values, insulation location, fenestration, U-factors, glazing requirements, air-leakage controls.
- 105.2.3 - Plumbing System
  Pipe insulation, protection, controls.
- 105.2.4 - Mechanical Systems
  Equipment type & size, controls, insulation, system and damper air-leakage, fan efficiency, energy recovery.
- 105.2.5 - Electrical System
  Lighting system controls, components, meters.
- 105.2.6 - Final Inspection
  Verification of installation and operation, and documentation verifying commissioning activities.

Contractor inspection/ coordination requirements:
- Schedule work to allow for inspection by the Authority Having Jurisdiction (AHJ) and/or Owner's 3rd party inspector (if applicable) prior to cover-up at various stages during the construction process.
- Schedule of inspections to be determined by the AHJ.
- Pay all applicable fees. Refer to specifications for details.
- Coordinate with other building inspections including structural special inspections. Refer to structural drawings for details.

Mandatory prescriptive requirements per C401.2.2:
- 402 - Envelope (see table below)
- 403 - Mechanical - See mechanical drawings
- 404 - Water heating - See plumbing drawings
- 405 - Power & lighting - See electrical drawings
- 406 - Additional efficiency packages - See notes below
- 408 - Maintenance and information

See the following locations for compliance with mandatory requirements per 401.2.3:

Requirement:	Drawing or Specification #:
402.5 - air leakage (blower-door test)	########
403.2 - system design (zone isolation & ventilation)	#####
403.3-403.3.2 - Equipment sizing and performance (SEER)	#####
403.4-403.4.2.3 - Automated controls	#####
403.5.5 - Economizer fault detection	#####
403.7 - Demand control ventilation (DCV)	#####
403.8.1-403.8.4 - Fan limitations	#####
403.10.1-403.10.3 - Walk in coolers and cold display cases	#####, #####
403.11 - Duct seals & pipe insulation	########
403.12 - Outside heating (radiant or snow-melt)	###
404 - Water heating (efficiency, insulation, circulation)	#####
405 - Electrical power & lighting (controls, power limits, etc.)	#####
407 - Total Building Performance (vs. reference design)	####, ############
408 - Maintenance (Commissioning and testing)	#####, #####, #####

402 - Prescriptive building envelope requirements per IECC Tables C402.1.3 and C402.1.4:

		R-value	C, F, or U factor	Provided
Roofs	Insulation above deck	R-30ci	U-0.032	#####
	Metal buildings	R-19+11LS	U-0.035	#####
	Attic and other	R-38	U-0.027	#####
Walls above grade	Mass walls	R-11.4ci	U-0.090	#####
	Metal buildings	R-13+R-13ci	U-0.052	#####
	Metal framed walls	R-13+R-7.5ci	U-0.064	#####
	Wood framed and other	R-13+R-3.8ci or R-20	U-0.064	#####
Walls below grade		R-7.5ci	C-0.119	#####
Floors	Mass floors	R-10ci	U-0.074	#####
	Framed floors	R-30	U-0.033	#####
Slab-on-grade	Unheated floor slabs	R-10	F-0.54	#####
	Depth below F.F. (in.)	24"	-	#####
	Heated floor slabs	R-15	F-0.79	#####
	Depth below F.F. (in.)	24" + R-5 full slab	0.64	#####
Opaque doors	Nonswinging door	R4.75	U-0.31	#####
	Swinging door	-	U-0.37	#####
	Garage door	-	U-0.31	#####

KEYED NOTES

07 2100.A1	BATT INSULATION
09 2116.A2	5/8" GYPSUM BOARD
10 4400.C1	SEMI-RECESSED FIRE EXTINGUISHER CABINET W/ FIRE EXTINGUISHER
10 4400.D1	PORTABLE FIRE EXTINGUISHER W/ WALL BRACKET ASSEMBLY

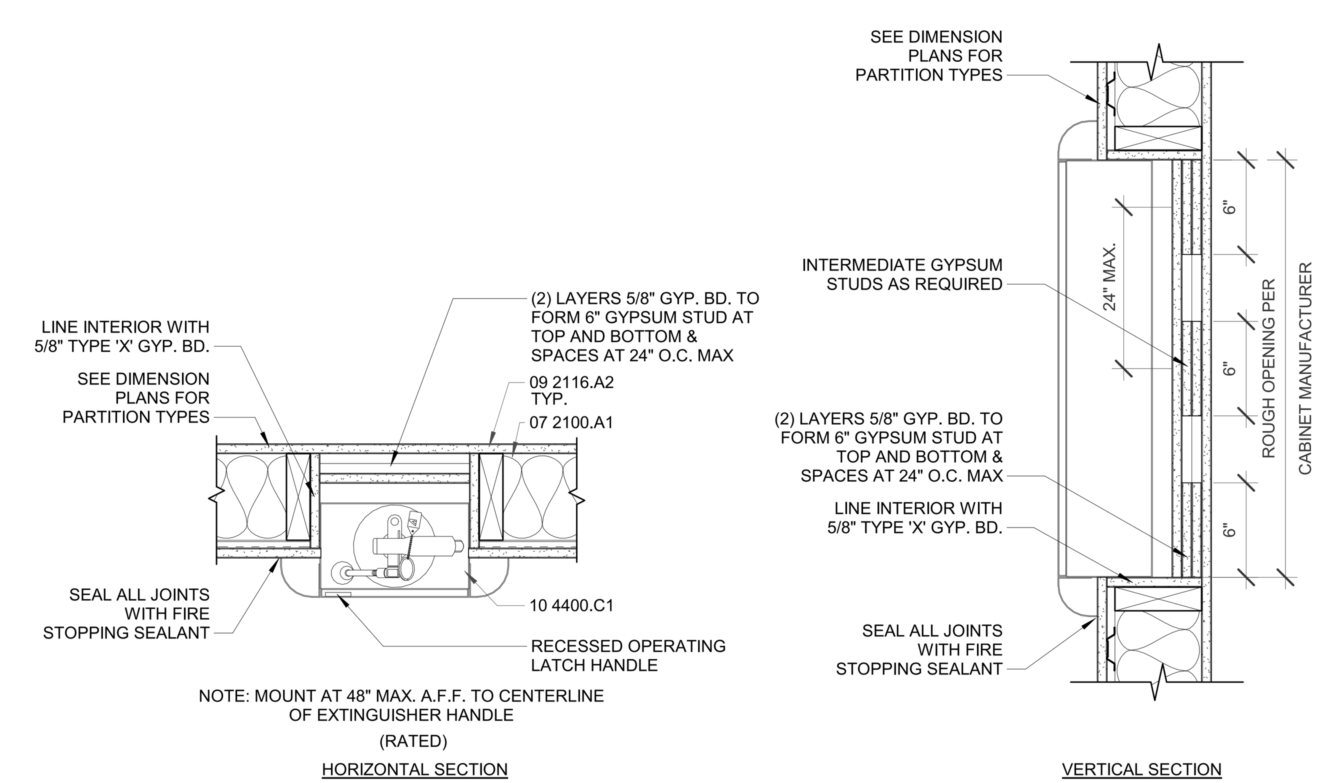

A3 **SEMI RECESSED FIRE EXTINGUISHER CABINET**
1 1/2" = 1'-0"

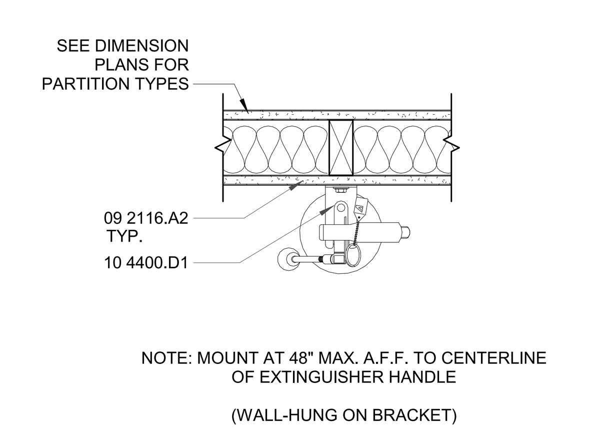

A1 **WALL HUNG FIRE EXTINQUISHER**
1 1/2" = 1'-0"

STAMP

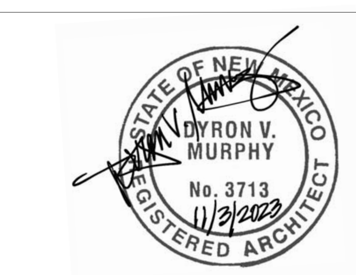

DYRON MURPHY ARCHITECTS, P.C.
4505 Montbel Place NE, Albuquerque, New Mexico 87107

SHIPROCK PINNACLE HOTEL & RESTAURANT
SHIPROCK, NEW MEXICO
100% CONSTRUCTION DOCUMENTS
ISSUED FOR CONSTRUCTION
NOVEMBER 3, 2023

PROJECT NUMBER	DRAWN BY	PROJ MGR
2022.10	DF	DM

CODE ANALYSIS
Sheet Title

Sheet Number of
G003

11/6/2023 9:48:01 AM C:\Revit Locals\Shiprock Pinnacle_Hotel_dfeldbusch_dm-architects_com.rvt
DYRON MURPHY ARCHITECTS, P.C.

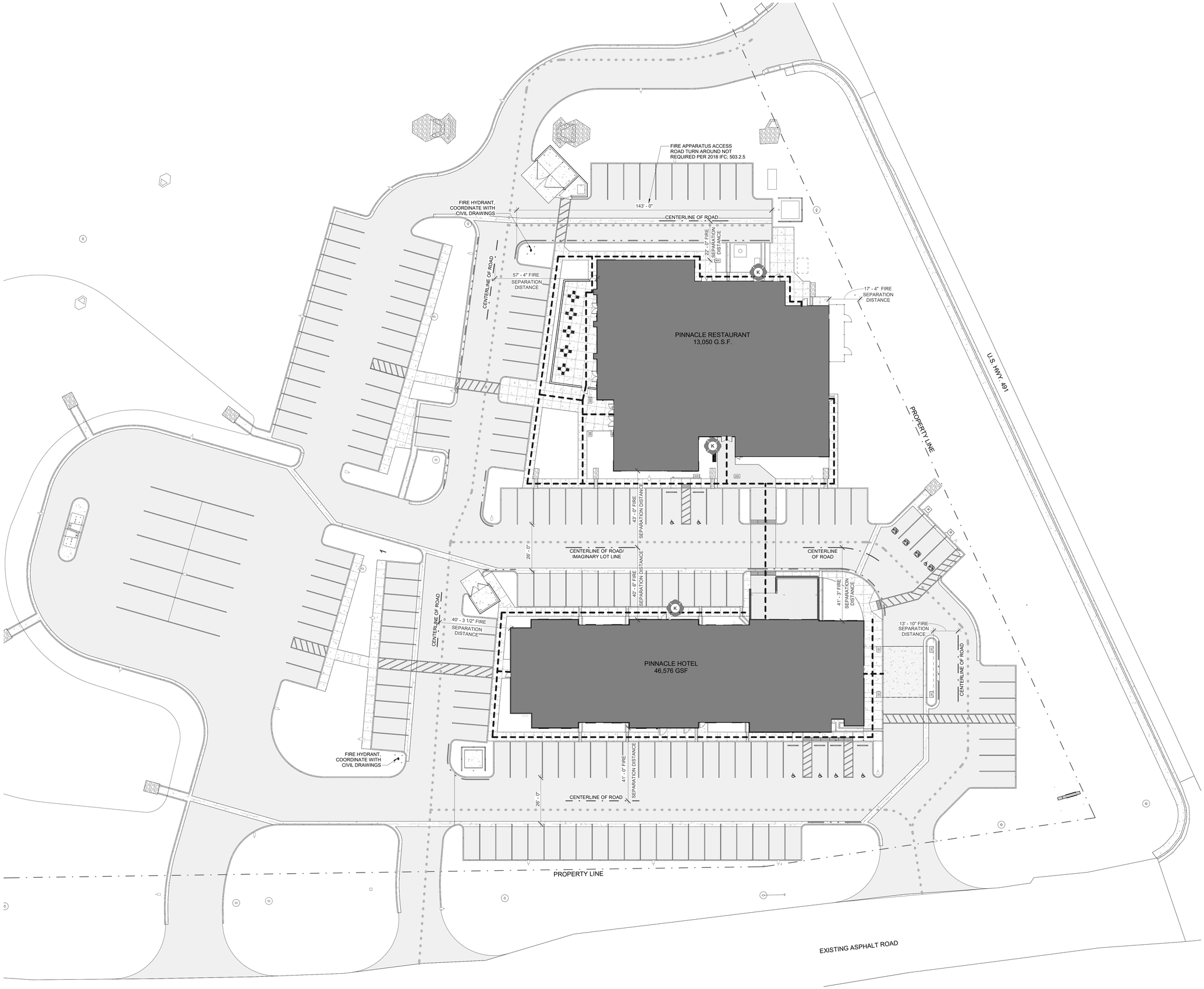

GENERAL NOTES

A. DIMENSIONS FOR FIRE SEPARATION DISTANCE ARE MEASURED PERPENDICULAR FROM EXTERIOR WALLS TO EITHER THE PROPERTY LINE, AN IMAGINARY LOT LINE, OR THE CENTERLINE OF A PUBLIC WAY AS APPLICABLE.
B. REFER TO CIVIL ENGINEERING DRAWINGS FOR FIRE PROTECTION FEATURES SUCH AS HYDRANT SPACING AND FLOW CALCULATIONS.
C. FIRE DEPARTMENT VEHICLE ACCESS MAY REQUIRE ADDITIONAL MARKINGS OR SIGNAGE AS DICTATED BY THE AUTHORITY HAVING JURISDICTION AND/OR THE LOCAL FIRE DEPARTMENT.
D. KNOX BOX LOCATIONS ARE APPROXIMATE. COORDINATE FINAL LOCATION WITH AHJ AND/OR LOCAL FIRE DEPARTMENT.
E. ACCESSIBLE ROUTES INDICATED SHALL BE GRADED AT NOT MORE THAN 1:20 (5%) EXCEPT WHERE RAMPS OR CURB RAMPS ARE INDICATED. RAMPS SHALL NOT BE SLOPED GREATER THAN 1:12 (8%). CROSS SLOPES SHALL NOT EXCEED 1:48 (2%) AT ANY WALKING SURFACE.
F. IN THE CASE OF ANY DISCREPANCY BETWEEN THE GRADE REQUIREMENTS AT ACCESSIBLE ROUTES AND THOSE SHOWN ON THE CIVIL ENGINEERING DRAWINGS, THE MORE RESTRICTIVE SHALL APPLY.

IBC Table 1106.1 Accessible Parking Spaces

Total parking spaces provided in parking facilities	Required minimum number of accessible spaces
1 to 25	1
26 to 50	2
51 to 75	3
76 to 100	4
101 to 150	5
151 to 200	6
201 to 300	7
301 to 400	8
401 to 500	9
501 to 1,000	2% of total
1,001 and over	20, plus one for each 100, or fraction thereof, over 1,000

1106.5 Van Spaces. For every six or fraction of six accessible parking spaces, at least one shall be a van-accessible parking space.

ACCESSIBLE PATH OF TRAVEL

FIRE TRUCK ACCESS ROUTE

FIRE LANE NO PARKING CURB PAINTING; CONTRACTOR TO VERIFY WITH FIRE MARSHAL

KNOX BOX, *COORDINATE LOCATIONS AND TYPES WITH LOCAL FIRE DEPARTMENT HAVING JURISDICTION

STAMP

STATE OF NEW MEXICO
DYRON V. MURPHY
No. 3713
11/3/2023
REGISTERED ARCHITECT

DYRON MURPHY ARCHITECTS, P.C.

4505 Montbel Place NE, Albuquerque, New Mexico 87107

SHIPROCK PINNACLE HOTEL & RESTAURANT

SHIPROCK, NEW MEXICO

100% CONSTRUCTION DOCUMENTS

ISSUED FOR CONSTRUCTION

NOVEMBER 3, 2023

PROJECT NUMBER	DRAWN BY	PROJ MGR
2022.10	DF	DM

SITE CODE PLAN

Sheet Title

Sheet Number of

G101

11/6/2023 7:38:40 AM C:\Revit Local\Shiprock Pinnacle_Site_R22_dfeldbusch_dm-architects_com.rvt
DYRON MURPHY ARCHITECTS, P.C.

Occupant Load Schedule (Areas) - 2nd, 3rd, & 4th Floor					
Area Name	Area (SF)	Area Use	Egress_Area Load Factor	Area Occ Load Factor Type	Area Occupants
R1					
Guest Rooms	26,732 SF	Residential	200	gross	135.00
Storage, Utilities, and Circulation	7,666 SF	Accessory storage areas, mechanical equipment room	300	gross	27.00
2nd, 3rd, & 4th Floor Total:	34,398 SF				162.00
GRAND TOTAL:	45,882 SF			BUILDING TOTAL:	324

D6 **2ND, 3RD, & 4TH FLOOR EXITING PLAN**
1/8" = 1'-0"

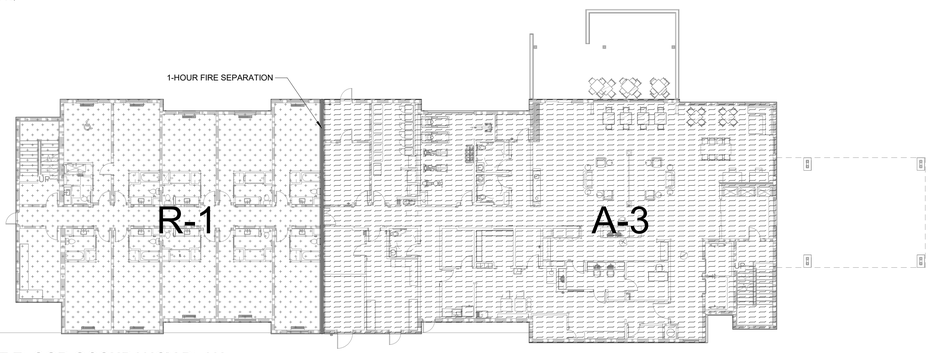

B6 **1ST FLOOR OCCUPANCY PLAN**
1/16" = 1'-0"

Occupant Load Schedule (Areas) - 1st Floor					
Area Name	Area (SF)	Area Use	Egress_Area Load Factor	Area Occ Load Factor Type	Area Occupants
A3					
Storage, Utilities, and Circulation	70 SF	Accessory storage areas, mechanical equipment room	300	gross	1.00
Storage, Utilities, and Circulation	3,278 SF	Accessory storage areas, mechanical equipment room	300	gross	11.00
Lobby	1,514 SF	Assembly_without fixed seats_Unconcentrated (tables and chairs)	15	net	101.00
Guest Laundry / Vending	339 SF	Business areas	100	gross	4.00
Reception/Support	1,270 SF	Business areas	100	gross	13.00
Fitness Center	423 SF	Exercise rooms	50	gross	9.00
	6,895 SF				139.00
R1					
Storage, Utilities, and Circulation	982 SF	Accessory storage areas, mechanical equipment room	300	gross	4.00
Guest Rooms	1,799 SF	Residential	200	gross	9.00
Guest Rooms	1,805 SF	Residential	200	gross	10.00
	4,585 SF				23.00
1st Floor Total:	11,480 SF				162.00

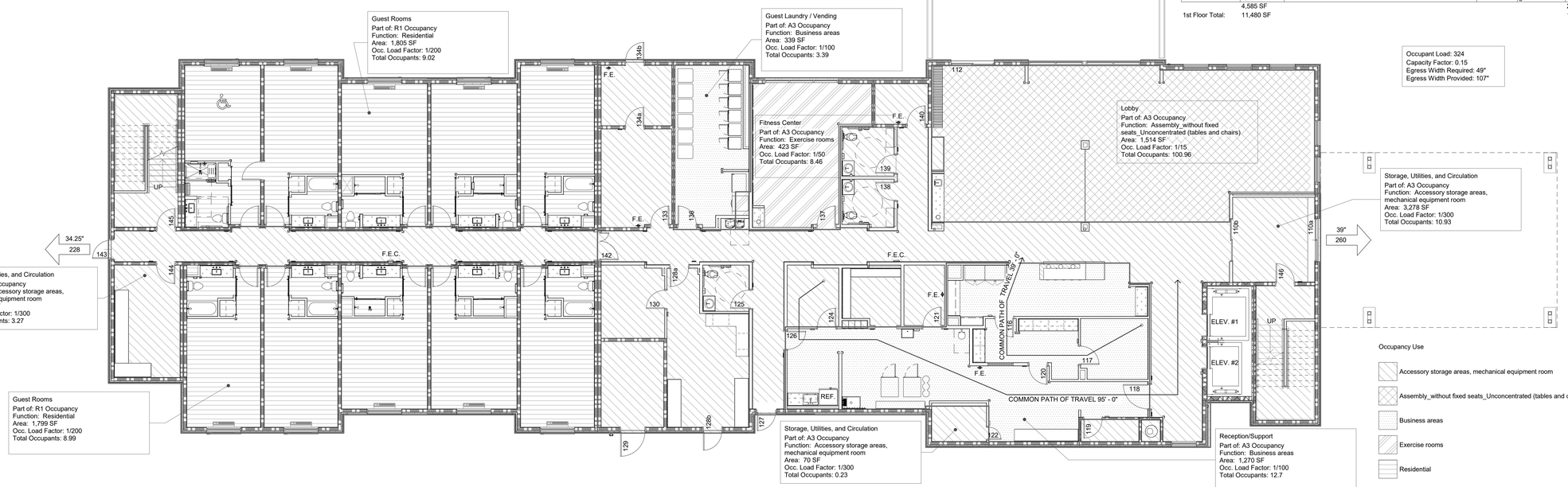

A6 **1ST FLOOR EXITING PLAN**
1/8" = 1'-0"

CODE REVIEW LEGEND

26" / 170 — DOOR WIDTH PROVIDED / MAXIMUM EGRESS CAPACITY OF DOOR

26" / 130 — STAIR WIDTH PROVIDED / MAXIMUM EGRESS CAPACITY OF STAIR

X-1 — OCCUPANCY TYPE

FIRE EXTINGUISHER LEGEND / NOTES

1. AT LOCATION NOTED "F.E.C." FURNISH AND INSTALL FIRE EXTINGUISHER CABINET WITH FIRE EXTINGUISHER AS SPECIFIED, SEE DETAIL A3/G003.
2. AT LOCATIONS NOTED "F.E." FURNISH AND INSTALL FIRE EXTINGUISHER AS SPECIFIED, SEE DETAIL A1/G003.

FIRE EXTINGUISHER WALL MOUNTED ON BRACKET

SEMI-RECESSED CABINET WITH FIRE EXTINGUISHER

WALL TYPES

PARTITION REQUIRING A 2 HOUR FIRE RATING

PARTITION REQUIRING A 1 HOUR FIRE RATING

PARTITION REQUIRING NO FIRE RATING

STAMP

STATE OF NEW MEXICO — DYRON V. MURPHY — No. 3713 — REGISTERED ARCHITECT

DYRON MURPHY ARCHITECTS, P.C.

4505 Montbel Place NE, Albuquerque, New Mexico 87107

SHIPROCK PINNACLE HOTEL & RESTAURANT

SHIPROCK, NEW MEXICO

100% CONSTRUCTION DOCUMENTS

ISSUED FOR CONSTRUCTION

NOVEMBER 3, 2023

PROJECT NUMBER	DRAWN BY	PROJ MGR
2022.10	DF	Designer

LIFE SAFETY PLANS - HOTEL

Sheet Title

Sheet Number G102 of

11/6/2023 9:48:37 AM C:\Revit Local\Shiprock Pinnacle_Hotel_dfellbaum_dm-architects_cent.rvt
DYRON MURPHY ARCHITECTS, P.C.

Occupant Load Schedule (Areas)					
Area Name	Area	Use	Load Factor	Type	Occupants
A2					
Banquet Hall 01	2,550 SF	Assembly_without fixed seats_Unconcentrated (tables and chairs)	15	net	169.99
Banquet Hall 02	1,611 SF	Assembly_without fixed seats_Unconcentrated (tables and chairs)	15	net	107.39
Board Room	526 SF	Assembly_without fixed seats_Unconcentrated (tables and chairs)	15	net	35.04
Dining Room	1,749 SF	Assembly_With fixed seats	0	see note	
Host Station	67 SF	Business areas	100	gross	0.67
Kitchen	2,750 SF	Kitchens_commercial	200	gross	13.75
Office	73 SF	Business areas	100	gross	0.73
Storage, Utilities, and Circulation	3,368 SF	Accessory storage areas, mechanical equipment room	300	gross	11.23
Waiting	98 SF	Assembly_without fixed seats_Unconcentrated (tables and chairs)	15	net	6.52
	12,792 SF				345.32

NOTE: Add 126 occupants for fixed seating area (Dining Room).

GRAND TOTAL: 472

CODE REVIEW LEGEND

26" — DOOR WIDTH PROVIDED

170 — MAXIMUM EGRESS CAPACITY OF DOOR

X — OCCUPANCY TYPE

FIRE EXTINGUISHER LEGEND / NOTES

1. AT LOCATION NOTED "F.E.C." FURNISH AND INSTALL FIRE EXTINGUISHER CABINET WITH FIRE EXTINGUISHER AS SPECIFIED, SEE DETAIL A3/G003.
2. AT LOCATIONS NOTED "F.E." FURNISH AND INSTALL FIRE EXTINGUISHER AS SPECIFIED, SEE DETAIL A1/G003.

FIRE EXTINGUISHER WALL MOUNTED ON BRACKET

SEMI-RECESSED CABINET WITH FIRE EXTINGUISHER

WALL TYPES

PARTITION REQUIRING A 1 HOUR FIRE RATING

PARTITION REQUIRING NO FIRE RATING

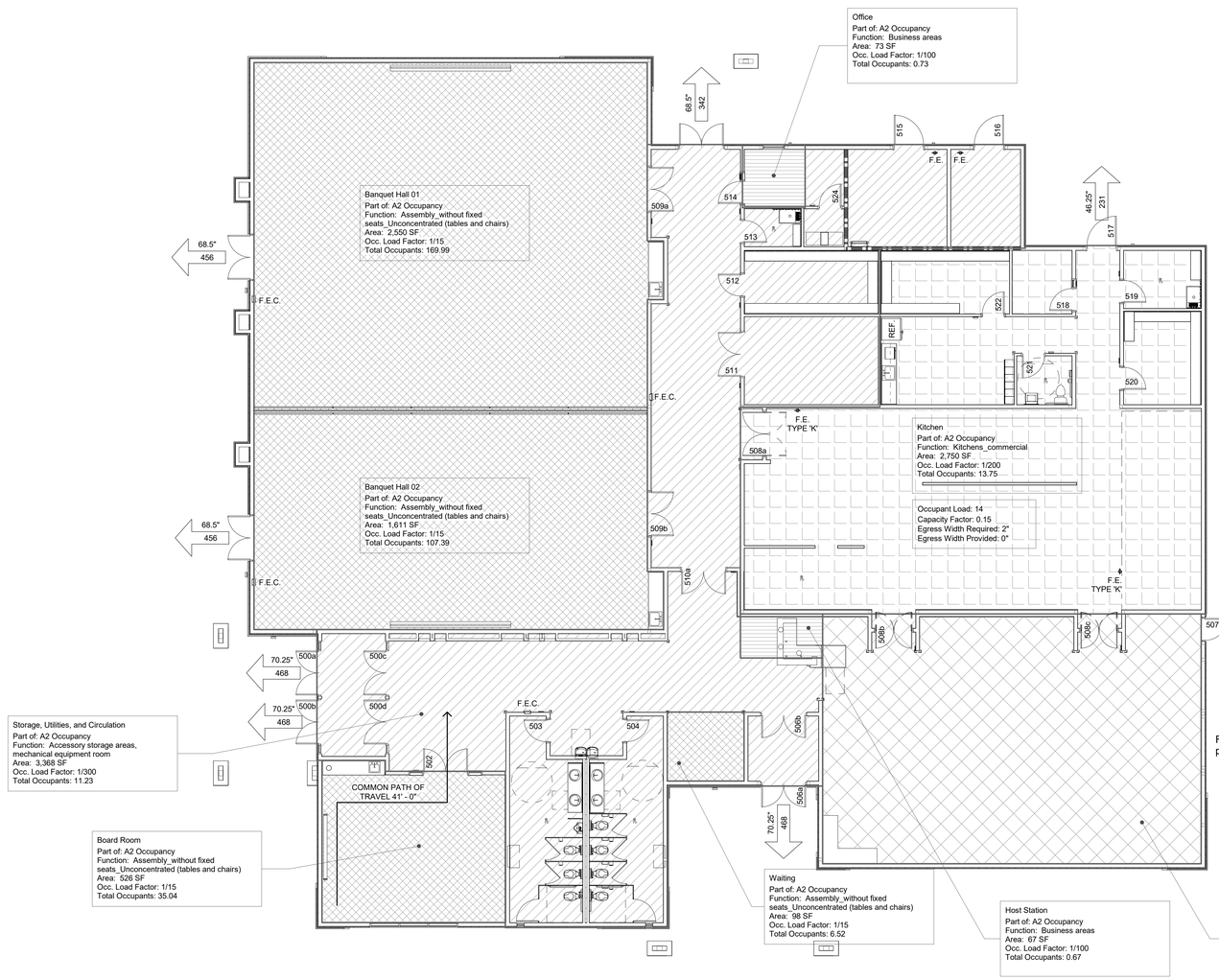

Furniture layout including fixed booths provides for seating for 126 guests.

Occupancy Use

- Accessory storage areas, mechanical equipment room
- Assembly_With fixed seats
- Assembly_without fixed seats_Unconcentrated (tables and chairs)
- Business areas
- Kitchens_commercial

Occupant Load: 472
Capacity Factor: 0.15
Egress Width Required: 71"
Egress Width Provided: 468"

Main exit calculations:

Total occupant load =	476
Half of total occupant load =	238
Egress capacity factor =	0.15
Egress capacity req'd =	35.7"
Main exit capacity =	468"

A5 **EXITING PLAN**
1/8" = 1'-0"

0 4' 8' 16'

N

STAMP

STATE OF NEW MEXICO
DYRON V. MURPHY
No. 3713
11/3/2023
REGISTERED ARCHITECT

DYRON MURPHY ARCHITECTS, P.C.

4505 Montbel Place NE, Albuquerque, New Mexico 87107

SHIPROCK PINNACLE HOTEL & RESTAURANT

SHIPROCK, NEW MEXICO

100% CONSTRUCTION DOCUMENTS

ISSUED FOR CONSTRUCTION

NOVEMBER 3, 2023

PROJECT NUMBER	DRAWN BY	PROJ MGR
2022.10	Author	Designer

LIFE SAFETY PLAN - RESTAURANT

Sheet Title

Sheet Number G103 of

11/6/2023 9:45:52 AM C:\Revit Local\Shiprock Pinnacle_Restaurant_dkobuch_dm-architects_cent.rvt
DYRON MURPHY ARCHITECTS, P.C.

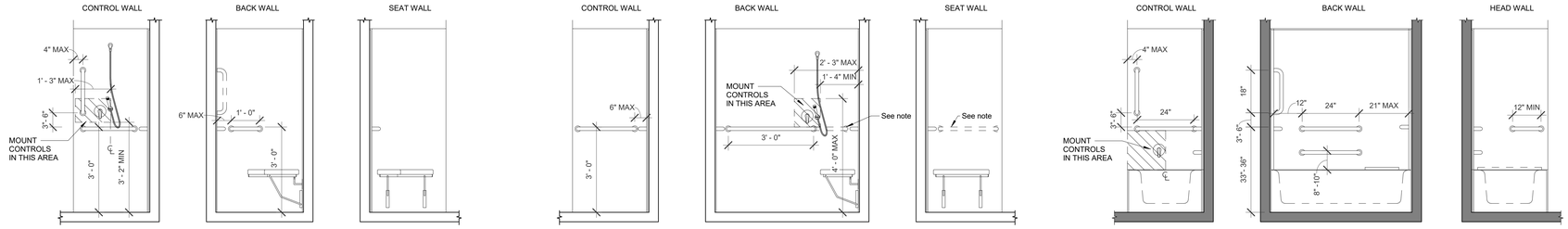

FIG. 607.5 & 608.4.1
GRAB BARS AND CONTROLS

FIG. 607.4.2
GRAB BARS FOR TUBS
WITHOUT PERMANENT SEAT

FIG. 607.5 & 608.4.1
GRAB BARS AND CONTROLS

FIG. 607.4.2
GRAB BARS FOR TUBS
WITHOUT PERMANENT SEAT

FIG. 607.5
GRAB BARS AND CONTROLS

FIG. 607.4.2
GRAB BARS FOR TUBS
WITHOUT PERMANENT SEAT

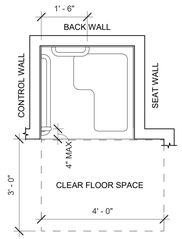

FIG. 608.2.1
SHOWER COMPARTMENT

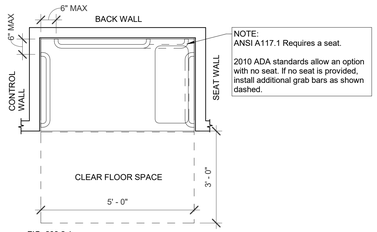

FIG. 608.2.1
SHOWER COMPARTMENT

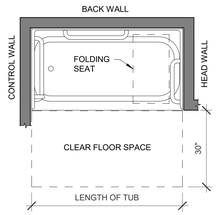

FIG. 607.2(a)
BATHTUB CLEARANCE
WITHOUT PERMANENT SEAT

D4 ADA_604 TUBS & SHOWERS
1/2" = 1'-0"

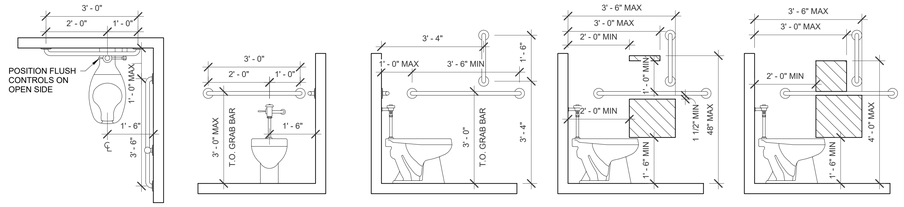

SEC. 604
ACCESSIBLE WATER CLOSET

FIG. 604.5.2
REAR WALL GRAB BAR

FIG. 604.5.1
SIDE WALL GRAB BARS

FIG. 604.7(a) & (b)
PROTRUDING DISPENSER LOCATIONS

FIG. 604.7(c)
RECESSED DISPENSER LOCATIONS

C3 ADA_604 TOILETS
1/2" = 1'-0"

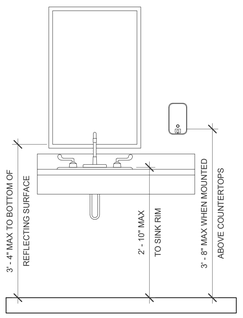

603.3 & 606.3
LAVATORY AND MIRROR HEIGHTS

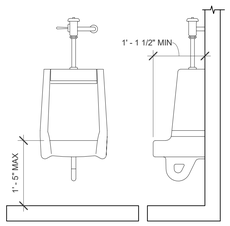

605.2
URINALS

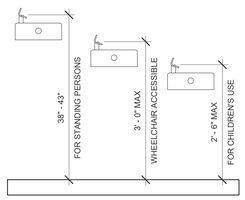

602.4
DRINKING FOUNTAINS

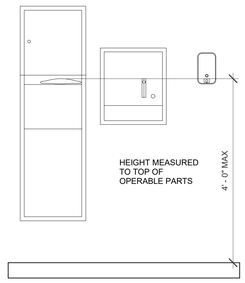

308
MISCELLANEOUS TOILET ACCESSORIES

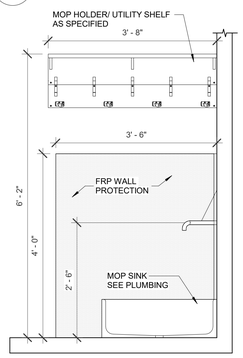

CUSTODIAL ACCESSORIES
(NON-ACCESSIBLE SPACES)

B6 ADA_MISC
3/4" = 1'-0"

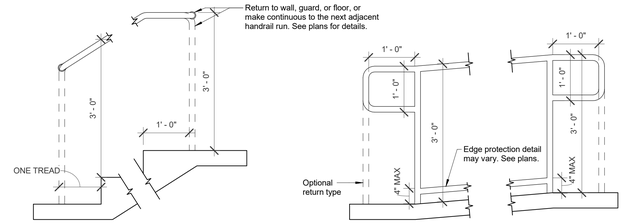

FIG. 505.10.2 & 505.10.3
HANDRAIL EXTENSIONS AT STAIRS

FIG. 505.10.1
HANDRAIL EXTENSIONS AT RAMPS

C2 ADA_505.10 HANDRAILS
3/4" = 1'-0"

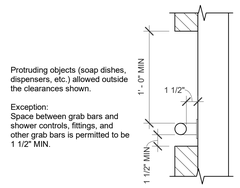

FIG 609.3
SPACING OF GRAB BARS

B2 ADA_609.3 GRAB BAR SPACING
1 1/2" = 1'-0"

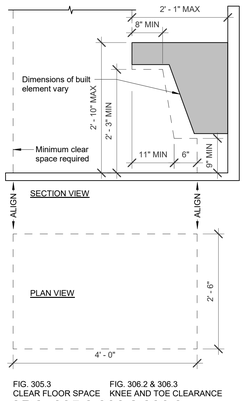

FIG. 305.3
CLEAR FLOOR SPACE

FIG. 306.2 & 306.3
KNEE AND TOE CLEARANCE

A3 ADA_305.3 306.2 306.3 KNEE & TOE CLEARANCE
3/4" = 1'-0"

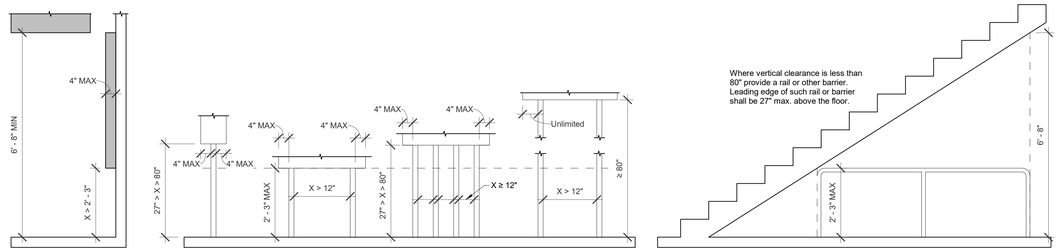

FIG. 307.2
LIMITS OF PROTRUDING OBJECTS

FIG. 307.3
POST MOUNTED PROTRUDING OBJECTS

FIG. 307.4
REDUCED VERTICAL CLEARANCE

A6 ADA_307.2 307.4 PROTRUING OBJECTS
1/2" = 1'-0"

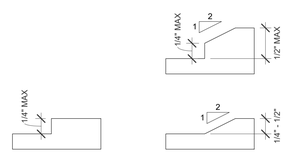

FIG. 303.2
VERTICAL CHANGES IN LEVEL

FIG. 303.3
BEVELED CHANGES IN LEVEL

A2 ADA_303.2 303.3 CHANGES IN LEVEL
12" = 1'-0"

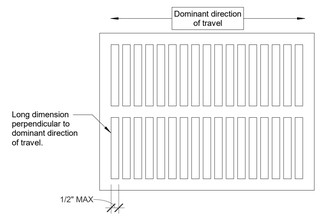

FIG. 302.3
OPENINGS IN FLOOR SURFACES

A1 ADA_302.3 FLOOR SURFACE
3" = 1'-0"

GENERAL NOTES

A. THE DETAILS ON THIS SHEET ARE INTENDED TO PROVIDE GENERAL INSTRUCTION FOR CODE REQUIREMENTS FOR INSTALLATION OF PLUMBING FIXTURES, CASEWORK, TOILET ACCESSORIES, AND OTHER BUILT-IN ELEMENTS. ADDITIONAL DETAILS MAY BE PROVIDED IN OTHER LOCATIONS WITHIN THE CONSTRUCTION DOCUMENTS WITH NOMINALLY DIFFERENT DESIGNS SHOWN.
B. IN THE CASE OF ANY DISCREPANCIES, NOTIFY ARCHITECT PRIOR TO FABRICATION OR ASSEMBLY. IN NO CASE SHALL ELEMENTS BE INSTALLED IN A NON-COMPLIANT MANNER.
C. NOT ALL DETAILS OR SPECIFIC ELEMENTS SHOWN ON THIS SHEET APPLY TO THIS PROJECT. REFER TO FOLLOWING DRAWINGS FOR SPECIFIC SCOPE OF WORK.
D. CONTRACTOR IS RESPONSIBLE FOR COORDINATION BETWEEN TRADES INCLUDING CROSS-CHECKING ARCHITECTURAL AND CODE REQUIREMENTS WITH ROUGH-IN INSTALLATIONS.
E. PROVIDE BACKING FOR INSTALLATION OF GRAB BARS AND OTHER ACCESSORIES WHETHER OR NOT SPECIFICALLY CALLED FOR ON PLANS.

STAMP

DYRON MURPHY ARCHITECTS, P.C.
4505 Montbel Place NE, Albuquerque, New Mexico 87107

SHIPROCK PINNACLE HOTEL & RESTAURANT

SHIPROCK, NEW MEXICO

100% CONSTRUCTION DOCUMENTS

ISSUED FOR CONSTRUCTION

NOVEMBER 3, 2023

PROJECT NUMBER	DRAWN BY	PROJ MGR
2022.10	Author	Designer

ACCESSIBILITY DETAILS

Sheet Title

Sheet Number of

G501

C:\Revit Local\Shiprock Pinnacle_Hotel_dmBrown_pm-architects_com.rvt
11/6/2023 9:48:40 AM
DYRON MURPHY ARCHITECTS, P.C.

GENERAL NOTES
MATERIALS AND WORKMANSHIP

THE MATERIALS AND WORKMANSHIP SHALL BE DONE IN ACCORDANCE WITH THE FOLLOWING CURRENT SPECIFICATIONS, THESE PLANS AND GENERALLY ACCEPTED GOOD CONSTRUCTION PRACTICES. IN THE EVENT OF A CONFLICT BETWEEN THE SPECIFICATIONS AND THE PLANS, THE CONTRACTOR IS REQUIRED TO CONTACT THE ENGINEER FOR CLARIFICATION OF THE CORRECT INFORMATION. 'LATEST EDITION" MEANS THE MOST RECENT SPECIFICATION OR STANDARD IN EFFECT AS OF THE DATE OF THE ENGINEER'S SEAL ON THESE PLANS.

PROJECT SPECIFICATIONS

NEW MEXICO STANDARD SPECIFICATIONS FOR PUBLIC WORK CONSTRUCTION (NMSS PWC), LATEST EDITION.

NEW MEXICO DEPARTMENT OF TRANSPORTATION, "STANDARD DRAWINGS FOR HIGHWAY AND BRIDGE CONSTRUCTION", 2019 EDITION.

U.S. DEPARTMENT OF TRANSPORTATION, FEDERAL HIGHWAY ADMINISTRATION, 'MANUAL ON UNIFORM TRAFFIC CONTROL DEVICES FOR STREETS AND HIGHWAYS" (MUTCD).

BUILDING CONSTRUCTION AND SAFETY CODE (NFPA 5000) 2018 EDITION

AMERICAN WATER WORKS ASSOCIATION (AWWA), 'STANDARDS", SECTIONS C AND D, LATEST EDITION.

NAVAJO TRIBAL UTILITY AUTHORITY (NTUA), TECHNICAL SPECIFICATIONS FOR MATERIALS AND WORKMANSHIP FOR WATER AND WASTEWATER FACILITIES, LATEST EDITION.

IF TWO OR MORE GIVEN SPECIFICATIONS DIFFER IN CONTENT, THE MORE RESTRICTIVE OR STRINGENT STANDARD OR SPECIFICATION, IN THE OPINION OF THE ENGINEER, WILL GOVERN.

IT SHALL BE THE CONTRACTOR'S RESPONSIBILITY TO OBTAIN COPIES OF THE ABOVE STANDARDS, SPECIFICATIONS AND DETAILS, AS WELL AS ALL OTHER STANDARDS AND SPECIFICATIONS WHICH MAY BE NECESSARY TO COMPLETE AND ACCURATELY INTERPRET THESE PLANS. THIS REQUIREMENT EXTENDS TO ANY STANDARDS, DETAILS OR SPECIFICATIONS REFERENCED BY THE CONSTRUCTION DOCUMENTS AND NOT INCLUDED IN THE LIST ABOVE. THE CONTRACTOR AS STATED HEREIN SHALL MEAN THE GENERAL CONTRACTOR AND HIS ASSOCIATED SUBCONTRACTORS. THE GENERAL CONTRACTOR IS RESPONSIBLE FOR THE COORDINATION AND PERFORMANCE OF THE WORK OF ALL OF HIS SUBCONTRACTORS AND SUPPLIERS.

PRIOR TO CONSTRUCTION THE CONTRACTOR SHALL THOROUGHLY SATISFY HIMSELF AS TO THE ACTUAL CONDITIONS AND REQUIREMENTS OF WORK, IF ANY. NO CLAIM SHALL BE MADE AGAINST THE OWNER OR ENGINEER FOR ANY EXCESS OR DEFICIENCY THEREIN, ACTUAL OR RELATIVE. ALL WORK SHALL BE BID AND INSTALLED BY THE CONTRACTOR COMPLETE AND OPERATIONAL TO LINES, GRADES AND FUNCTIONS INDICATED ON THE PLANS AND SPECIFICATIONS, INCLUDING LABOR, MATERIALS, EQUIPMENT AND SERVICES NECESSARY TO COMPLETE ALL PROJECT EARTHWORK AND SITE WORK INCLUDING BUT NOT LIMITED TO: SITE CLEARING, GRUBBING, DEMOLITION, DEBRIS REMOVAL FROM THE SITE, IMPORT AND/OR EXPORT OF SOILS AND OTHER MATERIALS TO AND FROM THE SITE, BORROW MATERIALS, TEMPORARY SOILS MATERIAL STOCKPILING, CUT AND FILL, SLOPES, SOIL AND BANK STABILIZATION AND PROTECTION, BERMING, RELOCATIONS, STRUCTURE EXCAVATIONS, TRENCHING, ALL BACKFILLING, SITE GRADING, PAVING, PIPING, UTILITY LINE AND STORM DRAINAGE CONSTRUCTION, SITE CONCRETE WORK, EROSION CONTROL, DUST CONTROL AND OTHER MISCELLANEOUS SITE WORK STRUCTURES AND ITEMS INDICATED ON THE PLANS AND THE CONTRACT DOCUMENTS. ALL GRUBBING AND WASTE MATERIAL SHALL BE REMOVED FROM THE SITE PER THE DIRECTION OF THE OWNER OR HIS REPRESENTATIVE. THE USE OF EXPLOSIVES WILL NOT BE PERMITTED.

THE ENGINEER WILL NOT BE RESPONSIBLE FOR CONSTRUCTION MEANS, METHODS, TECHNIQUES, SEQUENCES AND PROCEDURES OR FOR SAFETY PRECAUTIONS OR PROGRAMS UTILIZED IN CONNECTION WITH THE WORK, AND WILL NOT BE RESPONSIBLE FOR THE CONTRACTOR'S FAILURE TO CARRY OUT THE WORK IN ACCORDANCE WITH THE CONTRACT DOCUMENTS. THE ENGINEER IS NOT RESPONSIBLE FOR COORDINATING THE RELOCATIONS OF UTILITIES, POWER POLES, ETC.

THE CONTRACTOR IS RESPONSIBLE FOR DEVELOPING THEIR OWN QUANTITIES FOR THEIR BIDS. THE CONTRACTOR SHALL NOT BE RELIEVED OF RESPONSIBILITY FOR INDEPENDENTLY ESTIMATING WORK QUANTITIES PRIOR TO BIDDING. ANY DISCREPANCIES IN SITE MATERIALS SHALL BE BROUGHT TO THE ATTENTION OF THE ENGINEER IMMEDIATELY AND A MINIMUM OF 7 DAYS PRIOR TO BIDDING FOR REVIEW. ALL SHRINK OF EARTH MATERIAL FROM UTILITY TRENCHES AND FOUNDATIONS SHALL BE INCLUDED IN THE CONTRACTOR'S BID.

PAYMENT WILL NOT BE MADE TO THE CONTRACTOR FOR CHANGES OR ADDITIONAL ITEMS UNLESS THEY ARE APPROVED IN WRITING BY THE OWNER OR THE OWNER'S REPRESENTATIVE.

THE ENGINEER MAY REQUIRE THE SUBMITTAL OF A 'CERTIFICATE OF COMPLIANCE" AND/OR 'MANUFACTURE'S GUIDELINES" FOR ANY MATERIALS USED IN THE WORK. MANUFACTURE'S GUIDELINES SHALL CONSIST OF WRITTEN INSTRUCTIONS FOR SHIPPING, HANDLING, UNLOADING, CUTTING, JOINING, INSTALLATION, STORAGE, AND/OR ANY OTHER FACETS OF WORKING.

SHOP DRAWINGS SHALL BE PROVIDED BY THE CONTRACTOR PER PROJECT SPECIFICATIONS.

THE ENGINEER MAY ORDER ANY OR ALL MATERIALS USED IN THE WORK TO BE TESTED ACCORDING TO AASHTO AND ASTM STANDARDS. THE CONTRACTOR SHALL, AT HIS EXPENSE, SUPPLY CERTIFICATES OR RESULTS OF TESTING.

ALL WORK AND MATERIALS NOT CONFORMING TO SPECIFICATIONS OR PERFORMED WITHOUT THE CONSENT OF THE OWNER OR HIS AUTHORIZED REPRESENTATIVE WILL BE SUBJECT TO REJECTION BY THE OWNER AND/OR ENGINEER AND REPLACED AT THE CONTRACTOR'S EXPENSE.

THE CONTRACTOR SHALL GUARD AGAINST DAMAGE DURING CONSTRUCTION TO ADJACENT PROPERTIES, FENCES, WALLS AND UTILITY EQUIPMENT. ANY ITEMS DAMAGED BY CONSTRUCTION SHALL BE REPLACED WITH THE SAME KIND OR BETTER AT CONTRACTOR'S EXPENSE.

THE CONTRACTOR SHALL SUBMIT CAREFULLY DOCUMENTED AND CONSIDERED WRITTEN PROPOSALS FOR ADDITIONAL WORK OR ALTERNATE MATERIALS TO THE ENGINEER FOR APPROVAL. NO WORK ON ADDITIONAL WORK ITEMS SHALL BE PERFORMED UNTIL WRITTEN APPROVAL IS GRANTED BY THE OWNER. ANY WORK PERFORMED WITHOUT THE KNOWLEDGE AND APPROVAL OF THE OWNER OR HIS REPRESENTATIVE IS SUBJECT TO REMOVAL AND REPLACEMENT AT THE CONTRACTOR'S EXPENSE.

UNDERGROUND UTILITY LOCATIONS, AS SHOWN ON THESE PLANS, WERE DETERMINED FROM FIELD MEASUREMENTS, CONSTRUCTION PLANS, RECORD PLANS, OR UTILITY MAPS FURNISHED BY OTHERS. LOCATIONS OF UNDERGROUND UTILITIES ARE TO BE REGARDED AS APPROXIMATE ONLY. IT IS THE CONTRACTOR'S RESPONSIBILITY TO ESTABLISH IN THE FIELD THE ACTUAL LOCATIONS OF ALL UNDERGROUND LINES WHICH MAY IN ANY WAY AFFECT THE WORK.

COMPENSATION FOR UTILITY RELOCATIONS AND ADJUSTMENTS SHALL NOT INCLUDE ANY COSTS FOR REPAIR TO THE UTILITY DAMAGED BY THE CONTRACTOR OR HIS SUBCONTRACTOR(S). THE CONTRACTOR IS NOT RELIEVED OF THE RESPONSIBILITY FOR DETERMINING THE LOCATION OF ALL UTILITIES AFFECTING THE WORK.

THE CONTRACTOR SHALL NOT BE RELIEVED OF RESPONSIBILITY FOR MAKING COMPLETE AND ACCURATE ON-SITE DETERMINATIONS OF THE LOCATIONS OF ALL UTILITIES, STRUCTURES AND FIELD CONDITIONS, WHICH MAY AFFECT THE PROGRESS OF THE WORK.

WHERE PLANS CALL FOR CONNECTING NEW STRUCTURES TO EXISTING UNDERGROUND PIPES OR STRUCTURES, IT SHALL BE THE CONTRACTOR'S RESPONSIBILITY TO DETERMINE, AT THE TIME OF CONSTRUCTION, EXACT SIZES, TYPES AND LOCATIONS OF EXISTING UNDERGROUND IMPROVEMENTS AND TO FURNISH MATERIALS AS NEEDED TO MAKE THE REQUIRED CONNECTIONS.

ALL IMPROVEMENTS SHALL BE CONSTRUCTED BY CONTRACTORS LICENSED BY THE STATE OF NEW MEXICO WITH A CLASS OF LICENSE(S) FOR THE SPECIFIC WORK BEING PERFORMED.

THE CONTRACTOR IS RESPONSIBLE FOR ALL CONSTRUCTION METHODS, SEQUENCING, AND SAFETY DURING CONSTRUCTION.

THE CONTRACTOR IS REQUIRED TO COMPLY WITH ALL TRIBAL, STATE AND FEDERAL LAWS AND REGULATIONS APPLICABLE TO THE CONSTRUCTION OF THIS PROJECT.

NO EXISTING SURVEY MONUMENTS SHALL BE REMOVED OR DISTURBED BY THE CONTRACTOR. THE CONTRACTOR SHALL BE FINANCIALLY RESPONSIBLE FOR COSTS TO REESTABLISH MONUMENTS OR CONTROLS REMOVED WITHOUT PRIOR NOTICE AND APPROVAL.

SUSPENSION OF WORK

THE OWNER, THE ENGINEER OR HIS AUTHORIZED REPRESENTATIVE MAY SUSPEND THE WORK BY WRITTEN NOTICE WHEN, IN HIS JUDGMENT, PROGRESS IS UNSATISFACTORY, WORK BEING DONE IS UNAUTHORIZED OR DEFECTIVE, WEATHER CONDITIONS ARE UNSUITABLE, OR THERE IS DANGER TO THE PUBLIC HEALTH OR SAFETY.

WARRANTY

ANY DEFECTS WHICH APPEAR IN THE WORK WITHIN TWO YEARS FROM THE DATE OF ACCEPTANCE AND WHICH ARE DUE TO IMPROPER WORKMANSHIP OR INFERIOR MATERIALS SUPPLIED SHALL BE CORRECTED BY OR AT THE EXPENSE OF THE CONTRACTOR (UNLESS SPECIFIED BY THE OWNER).

PERMITS

CONTRACTOR SHALL OBTAIN ALL PERMITS AT HIS OWN EXPENSE FROM LOCAL COUNTY, STATE, FEDERAL AND TRIBAL AGENCIES AND AIR POLLUTION CONTROL AUTHORITIES PRIOR TO BEGINNING CONSTRUCTION.

REQUIRED PERMITS SHALL BE SECURED BY THE CONTRACTOR FROM THE APPROPRIATE AGENCIES. FEDERAL PERMITS, UTILITY AUTHORITIES AND OTHER PERMITS MAY BE REQUIRED. PRIOR TO CONSTRUCTION THE APPROPRIATE AGENCIES SHALL BE NOTIFIED BY THE CONTRACTOR AS REQUIRED BY THE PERMITS.

THE CONTRACTOR SHALL BE RESPONSIBLE FOR OBTAINING AT HIS OWN EXPENSE ALL APPROPRIATE INSURANCE FORMS FOR PERMIT REQUIREMENTS.

IT SHALL BE THE RESPONSIBILITY OF THE CONTRACTOR TO ARRANGE FOR THE RELOCATION AND RELOCATION COSTS, IF ANY, OF ALL UTILITIES, AND SUBMIT A UTILITY RELOCATION SCHEDULE TO THE UTILITY OWNER AND DESIGN ENGINEER PRIOR TO CONSTRUCTION. ALL PUBLIC UTILITY EQUIPMENT POLES, BOXES, STRUCTURES AND ANY UTILITY COMPANY EQUIPMENT SHALL BE RELOCATED BY THE APPROPRIATE UTILITY COMPANY OR MUNICIPALITY BEFORE ANY WORK IS STARTED.

PAVING AND CONCRETE WORK

ALL PAVING IS TO BE IN ACCORDANCE WITH SPECIFICATIONS SECTIONS AND ANY OTHER SECTION OR OTHER SPECIFICATION REFERENCED THEREIN OR REFERENCED ON PLANS.
SUBGRADE PREPARATION – SPECIFICATION SECTION 31 2000 AND GEOTECHNICAL REPORT
UNTREATED AGGREGATE BASE (ABC) – SPECIFICATION SECTION 31 2000 AND GEOTECHNICAL REPORT
CONCRETE CURB & GUTTERS, SIDEWALKS SIDEWALK RAMPS, DRIVEWAYS – SPECIFICATION SECTION 32 1313
ASPHALT PAVEMENT – SPECIFICATION SECTION 32 1216

GRADING AND EARTHWORK

ALL GRADING AND EARTHWORK SHALL BE PER GEOTECHNICAL ENGINEERING REPORT, PROJECT SPECIFICATIONS OR ANY OTHER SPECIFICATION REFERENCED THEREIN OR REFERENCED ON PLANS.

SITE CLEARING – SPECIFICATION SECTION 31 1000
STRUCTURE EXCAVATION & BACKFILL – SPECIFICATION SECTION 31 2000
BORROW EXCAVATION – SPECIFICATION SECTION 31 2000
FILL CONSTRUCTION – SPECIFICATION SECTION 31 2000
RIPRAP CONSTRUCTION – SPECIFICATION SECTION 31 3700

NO GRADING OR TRENCHING WORK SHALL BEGIN PRIOR TO SUPPORTING AND PROTECTING EXISTING ONSITE AND ADJACENT PROPERTY FROM SETTLING, CRACKING, OR OTHER DAMAGE WHICH MIGHT RESULT. CONTRACTOR SHALL VERIFY FROM SOILS REPORT RECOMMENDATIONS THE DEGREE OF DIFFICULTY REQUIRED FOR TRENCHING AND EXCAVATION WORK BASED ON DEPTH AND TYPES OF MATERIALS TO BE ENCOUNTERED.

WATER SOURCE: THE CONTRACTOR SHALL MAKE THE NECESSARY ARRANGEMENTS FOR OBTAINING ALL WATER REQUIRED FOR SOIL COMPACTION, DRINKING PURPOSES AND DUST CONTROL WITH NAVAJO NATION WATER CODE ADMINISTRATION.

TOPSOIL THAT WILL BE AFFECTED BY ROUGH GRADING OR EXCAVATION SHALL BE STOCKPILED ON THE SITE SEPARATELY AND SHALL NOT BE USED FOR FILL, BUT SHALL BE CONSERVED AND USED FOR FINE AND FINISH GRADING.

THE CONTRACTOR SHALL PROVIDE POSITIVE DRAINAGE AWAY FROM ALL WALLS AND FOUNDATIONS. ALL STORM DRAINS, DRAIN LINES, OVERFLOWS, OUTLETS, AND/OR OTHER DRAINAGE TYPE OUTLETS WHICH CONDUCT MOISTURE NEAR THE STRUCTURES SHALL BE POSITIVELY DRAINED AWAY FROM THE STRUCTURE. NO WATER SHALL BE PERMITTED TO POND NEAR STRUCTURES OR FOUNDATIONS. ALL DRAINAGE SHALL BE CHANNELIZED AND TAKEN A MINIMUM OF 10 FEET AWAY FROM ALL STRUCTURES.

SUBGRADE PREPARATION: IF THE NATURAL SUBGRADE IS LESS THAN THE REQUIRED DENSITY, IT SHALL BE SCARIFIED AND COMPACTED TO A MINIMUM DEPTH AS NOTED IN THE PROJECT SOILS REPORT IMMEDIATELY PRIOR TO PLACING SUBSEQUENT FILL MATERIAL THEREON. THE CONTRACTOR IS RESPONSIBLE FOR MAINTENANCE AND REPAIR OF DAMAGE TO PREPARED SUBGRADE CAUSED BY CONTRACTORS OPERATIONS OR PUBLIC TRAFFIC. NO MATERIALS SHALL BE PLACED UPON THE PREPARED SUBGRADE UNTIL IT MEETS THE SPECIFIED REQUIREMENTS. SUBGRADE COMPACTION INCLUDES SUBGRADE UNDER DRIVEWAY, CURB, SIDEWALKS, SHOULDERS AND FILL SLOPES. SUBGRADE TOLERANCES SHALL BE AS SPECIFIED IN PROJECT SPECIFICATIONS AND THE PROJECT SOILS REPORT. OPEN LANDSCAPED AREAS SHALL BE GRADED TO +/– 0.20 FEET.

EARTH FILL: AREAS TO BE FILLED SHALL BE LEVELED TO PROVIDE A LEVEL BASE TO SUPPORT FILL MATERIALS. SUBGRADE AND SUBBASE REQUIRING FILL MATERIAL SHALL BE SCARIFIED MOISTENED AND COMPACTED PRIOR TO PLACING FILL. ALL FILL, SUBGRADE AND SUBBASE MATERIALS SHALL BE COMPACTED TO SPECIFIED DENSITIES AT OR NEAR OPTIMUM MOISTURE CONTENTS AS VERIFIED AND RECOMMENDED BY THE SOILS ENGINEER. PLACE FILL IN HORIZONTAL LIFTS NOT EXCEEDING EIGHT INCHES IN LOOSE THICKNESS BEFORE UNLESS OTHERWISE DIRECTED IN GEOTECHNICAL REPORT COMPACTION. SLOPED SURFACES SHALL BE PLOWED, STEPPED, AND BENCHED SO THAT THE FILL MATERIAL WILL BOND WITH THE EXISTING MATERIAL. SEE PROJECT SPECIFICATIONS AND THE PROJECT SOILS REPORT.

IT IS THE RESPONSIBILITY OF THE CONTRACTOR TO CONTACT THE SOILS ENGINEER FOR SCHEDULING OF COMPACTION TESTING. THE FREQUENCY OF DENSITY AND MOISTURE TESTS REQUIRED FOR ADEQUATE CONTROL SHALL BE THE RESPONSIBILITY OF THE SOILS ENGINEER WHO SHALL CERTIFY TO THE OWNER, ENGINEER AND CONTRACTOR AT PROJECT END THAT THE FILL IS COMPACTED PER THESE PLANS AND SPECIFICATIONS. COMPACTION SHALL BE ACHIEVED BY MECHANICAL MEANS. IN NO CASE SHALL STRUCTURE BACKFILLING BE FLOOD WATER SETTLED.

ALL SLOPE CONSTRUCTION AND ROADWAY EXCAVATION SHALL CONFORM TO THE REQUIREMENTS OF PROJECT SPECIFICATIONS AND IBC. CUT AND FILL SLOPES SHALL BE AS INDICATED ON THE PLANS, SHALL BE PROVIDED WITH THE APPROPRIATE BENCHES AS SPECIFIED IN THE REFERENCE DOCUMENTS AND INDICATED ON THE PLANS. ALL FILL SLOPES SHALL BE COMPACTED AS EACH LIFT OF FILL MATERIAL IS PLACED. ALL CUT AND FILL SLOPES SHALL BE UNIFORMLY GRADED TO LINES AND GRADES INDICATED. TOPS OF ALL CUT SLOPES SHALL BE ROUNDED AND ALL UNSTABLE AND LOOSE MATERIAL AT TOP OF SLOPE SHALL BE REMOVED.

UNLESS OTHERWISE SPECIFIED, COMPACT TO THE FOLLOWING SPECIFIED PERCENT OF MAXIMUM DENSITY AS DETERMINED IN ACCORDANCE WITH ASTM D698, PROJECT SPECIFICATIONS, AND PROJECT SOILS REPORT. MINIMUM PERCENT COMPACTION SUBGRADE SOIL OR AS DIRECTED IN THE PROJECT SOILS REPORT:
- PAVED AREAS (PAVEMENTS, SIDEWALKS, & PADS) – 95%
  EARTH FILL:
- AGGREGATE BASE COURSE – 100%
- BACKFILL AROUND STRUCTURES – 90%
- BACKFILL FOR UTILITY TRENCHES (PER NTUA TECHNICAL SPECIFICATIONS).
- BACKFILL FOR TRENCHES WITHIN 10' OF STRUCTURES AND WALLS SHALL BE COMPACTED TO 95% UNLESS DIRECTED OTHERWISE BY ENGINEER.

WATERING: CAREFULLY WATER EARTH FILL DURING PLACING BY MEANS OF A FINE SPRAY OR OTHER APPROVED METHOD, SO THAT EACH LAYER IS THOROUGHLY AND UNIFORMLY WETTED. MOISTURE CONTENT OF THE MATERIAL SHALL BE CAREFULLY CONTROLLED AT ALL TIMES AND CHECKED AT PROPER INTERVALS TO INSURE CORRECT MOISTURE FOR COMPACTION SEE THE PROJECT SPECIFICATIONS AND THE PROJECT SOILS REPORT.

TRENCHES: BACKFILLING TRENCHES SHALL PROGRESS AS RAPIDLY AS THE CONSTRUCTION AND TESTING OF THE WORK PERMIT. TRENCH BACKFILL FOR WATER, SEWER, AND UTILITY LINES SHALL CONFORM TO NTUA TECHNICAL SPECIFICATIONS.

MAINTENANCE AND PROTECTION: THE CONTRACTOR IS RESPONSIBLE FOR MAINTENANCE, CLEANING AND PROTECTION OF ALL CONSTRUCTION WORK UNTIL FINAL COMPLETION, APPROVAL OF PROJECT AND ACCEPTANCE BY OWNER, ENGINEER AND GOVERNING AUTHORITY. SETTLEMENT OF WASHING THAT OCCURS IN GRADED, TOPSIDE, OR BACKFILLED AREAS PRIOR TO ACCEPTANCE OF THE WORK SHALL BE REPAIRED AND GRADING RE–ESTABLISHED TO THE REQUIRED ELEVATIONS AND SLOPES.

EROSION CONTROL

THE SITE OPERATOR (CONTRACTOR), IF REQUIRED, SHALL COMPLETE THE STORMWATER POLLUTION PREVENTION PLAN (SWPPP), FILE THE NOTICE OF INTENT, IMPLEMENT THE REQUIREMENTS OF SWPPP, AND FILE THE NOTICE OF TERMINATION. THE CONTRACTOR SHALL MINIMIZE POLLUTANTS IN STORMWATER DISCHARGES USING BEST MANAGEMENT PRACTICES (BMP'S) FOR EROSION CONTROL.

MATERIAL TESTING STANDARDS

ALL TESTING SHALL BE PER SPECIFICATIONS AND NTUA TECHNICAL SPECIFICATIONS.

WATER AND SEWER NOTES

CONTRACTOR SHALL NOTIFY LOCAL DISTRICT OFFICE PRIOR TO EXCAVATING WATER AND/OR WASTEWATER UTILITIES.

CONTRACTOR SHALL OBTAIN APPROVED PERMISSION TO TAP FOR PRIOR TO TAPPING EXISTING WATER MAIN AND WASTEWATER MAIN.

ALL WATER AND WASTEWATER MAIN LINES SHALL BE PRESSURED TESTED PER N.T.U.A. TECHNICAL SPECIFICATIONS.

ALL WATER AND WASTEWATER MAINS AND SERVICE LINES SHALL MEET ALL HORIZONTAL AND SEPARATION REQUIREMENTS PER N.T.U.A. TECHNICAL SPECIFICATIONS.

WASTEWATER SEWER SERVICE LINES SHALL HAVE ONE–WAY CLEANOUTS AT EVERY BEND.

ALL CONSTRUCTION SHALL BE IN ACCORDANCE WITH CURRENT NTUA TECHNICAL SPECIFICATIONS AND DETAILS. ADDITIONS, PER AWWA STANDARDS AND SPECIFICATIONS.

WATER SERVICE LINES–SECTION TP 3.08
TRENCHING EXCAVATION, BACKFILLING AND COMPACTION – SECTION TP 1.0
WATERLINE TESTING – SECTION TP 3.09
WATER DISINFECTION– SECTION TP 3.10
WATER THRUSTBLOCKING–SECTION TP 3.05
FIRE HYDRANT ASSEMBLY–SECTION TP 3.03
SEWER PIPE INSTALLATION– SECTION TP 4.04
MANHOLE INSTALLATION– SECTION TP 4.05
SEWER SERVICE INSTALLATIONS–SECTION TP 4.07
SEWER LINE TESTING– SECTION TP 4.08

NTUA WATER AND WASTEWATER GENERAL NOTES:

1. ALL MATERIALS AND WORKMANSHIP SHALL COMPLY WITH THE N.T.U.A. TECHNICAL SPECIFICATIONS FOR MATERIALS AND WORKMANSHIP FOR WATER AND WASTEWATER FACILITIES, SEPTEMBER 2008.
2. CONTRACTOR SHALL OBTAIN APPROVED PERMISSION TO TAP (PTT) FORM PRIOR TO TAPPING EXISTING WATER AND SEWER MAIN.
3. CONTRACTOR SHALL COORDINATE WITH N.T.U.A. PRESENT AT THE SITE TO VERIFY LOCATION, DEPTH, SIZE AND TYPE OF UNDERGROUND UTILITIES.
4. CONTRACTOR TO COORDINATE WITH N.T.U.A. REGARDING WATER SHUT OFF WITH AT LEAST 3 DAYS ADVANCE NOTICE TO ISOLATE LINE(S), TO NOTIFY AFFECTED CUSTOMERS AND TO MINIMIZE OUTAGE TIME PRIOR TO CONNECTION OF NEW WATER SERVICE.
5. UNLESS OTHERWISE DIRECTED, ONLY AUTHORIZED N.T.U.A. STAFF WILL BE ALLOWED TO CLOSE/OPEN WATER VALVES FOR ANY CONNECTIONS TO EXISTING LINES AND FOR THE USAGE OF WATER.
6. ROUGH GRADING SHALL BE COMPLETED WITHIN 1/10 OF A FOOT OF PLAN GRADE PRIOR TO INSTALLING WATER AND WASTEWATER UTILITIES.
7. COORDINATE WITH LOCAL UTILITY PROVIDERS FOR ANY REMOVAL OF EXISTING FACILITIES PRIOR TO CONSTRUCTION.
8. CONTRACTOR SHALL PROTECT EXISTING UTILITIES IN PLACE. CONTRACTOR SHALL RESTORE AT OWN EXPENSE ANY DAMAGE TO EXISTING UTILITIES.
9. ALL WATER MAINS SHALL BE POLYVINYL CHLORIDE (PVC) PRESSURE PIPE WITH A MINIMUM OF 200 PSI PRESSURE CLASS UNLESS SPECIFIED OTHERWISE.
10. ALL FITTINGS AND VALVES 4" OR GREATER IN SIZE SHALL BE MADE FROM DUCTILE IRON FURNISHED WITH MECHANICAL JOINT ENDS AND SHALL HAVE A PRESSURE RATING OF 350 PSI. ALL MJ ENDS SHALL HAVE 'MEGALUG" MECHANICAL RESTRAINT WITH CONCRETE THRUST BLOCK, STD DTL WS–19. POLYETHYLENE WRAPPING (8 MILS MINIMUM THICKNESS IN ACCORDANCE WITH AWWA STANDARD C–105) SHALL BE INSTALLED AROUND DUCTILE IRON PIPES, FITTINGS, AND VALVES, FIRE HYDRANT BARRELS AND RODS AND CLAMPS.
11. A WARNING/DETECTABLE MARKING TAPE SHALL BE INSTALLED AT 12" MINIMUM AND 18" MAXIMUM ABOVE THE WATER AND SEWER PIPE. MARKING TAPE SHALL CONSIST OF ONE LAYER OF ALUMINUM FOIL LAMINATED BETWEEN TWO COLORED LAYERS OF INERT PLASTIC FILM. THE LAMINATION BOND SHOULD BE STRONG ENOUGH THAT THE LAYERS CANNOT BE SEPARATED BY HAND. TAPE SHALL BE A MINIMUM OF 5 MILS THICK AND 6 INCHES WIDE. TAPE SHALL BEAR A CONTINUOUS, PRINTED MESSAGE EVERY 16 TO 36 INCHES WARNING OF THE INSTALLATION BURIED BELOW. TAPE SHALL BE TERRA TAPE, LINETEC, OR AS APPROVED BY N.T.U.A.
12. DEFLECTION (VERTICAL OR HORIZONTAL) OF PIPES IS PERMITTED AND SHALL CONFORM TO AMERICAN WATER WORKS ASSOCIATION (AWWA) JOINT DEFLECTION FOR AWWA PRESSURE PIPE AND AT 80% OF MANUFACTURER'S RECOMMENDED MAXIMUM DEFLECTION, WHICHEVER IS MORE STRINGENT. A COPY OF THE MANUFACTURER'S RECOMMENDATION SHALL BE SUBMITTED TO N.T.U.A.
13. PIPES SHALL NOT BE BACKFILLED (INCLUDING BEDDING MATERIAL ABOVE THE SPRING LINE OF THE PIPE) UNTIL THE CONSTRUCTION HAS BEEN INSPECTED AND APPROVED FOR BACKFILLING BY A N.T.U.A REPRESENTATIVE OR THE PROJECT MATERIALS TESTING AGENCY OR THE PROJECT MATERIALS TESTING AGENCY.
14. CONTRACTOR SHALL PROVIDE AS–BUILT DRAWINGS OF ALL UTILITIES TO OWNER AND N.T.U.A. IN HARD COPY AND DIGITAL FORMAT.
15. HYDROSTATIC TESTING, FLUSHING AND CHLORINATION (SHALL BE CONDUCTED IN ACCORDANCE WITH N.T.U.A. TECHNICAL SPECIFICATIONS FOR MATERIALS AND WORKMANSHIP FOR WATER AND WASTEWATER FACILITIES, SEPTEMBER 2008) SHALL BE COORDINATED WITH N.T.U.A. AT LEAST 3 DAYS IN ADVANCE. N.T.U.A. REPRESENTATIVE SHALL BE PRESENT TO RECORD THE INFORMATION AND CERTIFY THE TESTING.
16. UTILITY CONSTRUCTION ACCEPTANCE AND UTILITY TRANSFER: CONTRACTOR SHALL SCHEDULE A FINAL OR PRE–FINAL INSPECTION WITH N.T.U.A. HQ ENGINEERING AND LOCAL DISTRICT OFFICE, OWNER AND GENERAL CONTRACTOR AT THE END OF CONSTRUCTION. DOCUMENTS SHALL BE PROVIDED BY THE CONTRACTOR AS FOLLOWS: AS–BUILT DRAWING, APPROVED PTT, HYDROSTATIC TESTING RESULTS, BACTERIOLOGICAL TESTING RESULTS, MATERIALS SUBMITTALS AND COST OF PLANT. PLEASE FOLLOW THE N.T.U.A. TECHNICAL SPECIFICATIONS FOR MATERIALS AND WORKMANSHIP FOR WATER AND WASTEWATER FACILITIES, SEPTEMBER 2008, SECTION TP 5.0.
17. THE CONTRACTOR/ENGINEER SHALL PROVIDE WARRANTY ON ALL NEW WATER AND WASTEWATER FACILITIES AGAINST DEFECTS IN MATERIALS, WORKMANSHIP AND FOR ANY DESIGN DEFICIENCIES, ERRORS AND OMISSIONS FOR THE PERIOD OF TWO (2) YEARS WHEN THE FACILITIES WERE INSPECTED, ACCEPTED AND APPROVED.

HOZHO ENGINEERING, LLC
2733 E. Lakin Dr.
Suite 2
Flagstaff, AZ 86004
ph: (928) 779-0420
www.hozho-eng.com

STAMP

ALTON L. WILLIAMS
NEW MEXICO
22081
PROFESSIONAL ENGINEER
11/03/23

DYRON MURPHY ARCHITECTS, P.C.
4505 Montbel Place NE, Albuquerque, New Mexico 87107

SHIPROCK PINNACLE HOTEL & RESTAURANT
SHIPROCK, NEW MEXICO
100% CONSTRUCTION DOCUMENTS
ISSUED FOR CONSTRUCTION
NOVEMBER 3, 2023

PROJECT NUMBER	DRAWN BY	PROJ MGR
23009	HOZHO	AW

GENERAL NOTES
Sheet Title

Sheet Number of
C100

10/19/2023 7:51:12 PM
N:\Projects\2023\23009 Shiprock Pinnacle Hotel\DWG\23009-C1XX-GN.dwg
DYRON MURPHY ARCHITECTS, P.C.

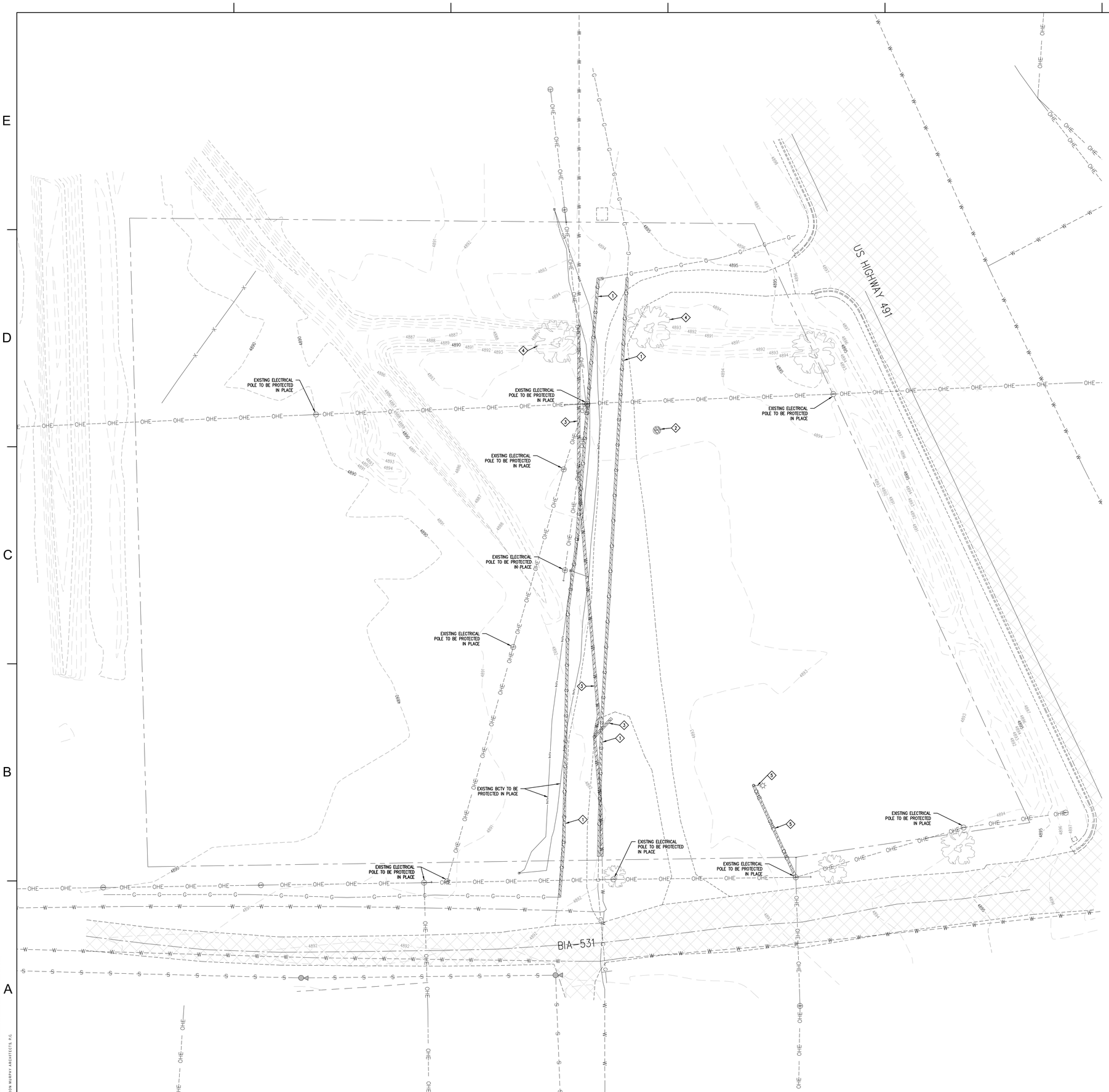

GENERAL DEMOLITION NOTES

1. REFER TO OFFSITE IMPROVEMENT PLAN (SHEET C600) FOR ADDITIONAL DEMOLITION ITEMS.
2. CONTRACTOR IS REQUIRED TO VERIFY FIELD CONDITIONS AND NOTIFY ENGINEER OF ANY DISCREPANCIES PRIOR TO START OF WORK.
3. THE LOCATIONS OF UTILITIES SHOWN ARE APPROXIMATE. CONTRACTOR SHALL COORDINATE EXACT LOCATIONS WITH THE LOCAL OPERATING UTILITY COMPANIES PRIOR TO COMMENCEMENT OF WORK.
4. THE CONTRACTOR IS RESPONSIBLE FOR ALL COORDINATION OF CONSTRUCTION AFFECTING UTILITIES AND THE COORDINATION OF ANY NECESSARY UTILITY REMOVAL, TERMINATION, AND/OR RELOCATION WORK.
5. A REASONABLE EFFORT HAS BEEN MADE TO SHOW THE LOCATIONS OF EXISTING UNDERGROUND FACILITIES AND UTILITIES IN THE CONSTRUCTION AREA. THE CONTRACTOR IS RESPONSIBLE FOR ANY DAMAGE TO UTILITIES AND/OR FACILITIES CAUSED DURING THEIR CONSTRUCTION OPERATIONS.
6. THIS PLAN SHOWS THE OVERALL AREAS OF DEMOLITION TO ALLOW CONSTRUCTION OF THE IMPROVEMENTS. THE EXACT AREAS OF DEMOLITION SHALL BE ESTABLISHED AND RESTORED BY THE CONTRACTOR. CONTRACTOR SHALL REMOVE ALL DEMOLISHED MATERIAL FROM THE SITE UNLESS OTHERWISE NOTED OR DIRECTED BY OWNER.
7. REMOVE ASPHALT, CONCRETE, GRAVEL, SOIL, LANDSCAPING AND/OR OTHER MATERIALS AS REQUIRED TO CONSTRUCT DESIGNED IMPROVEMENTS AS INDICATED ON PLAN. THE MATERIALS REMOVED FROM THE SITE SHALL BE DISPOSED OF IN A PROPER AND LEGAL MANNER PER FEDERAL, STATE, AND/OR LOCAL LAWS.
8. ANY EXISTING INFRASTRUCTURE TO REMAIN SHALL BE PROTECTED DURING DEMOLITION, CONSTRUCTION, AND GRADING ACTIVITIES. ANY DAMAGE DURING CONSTRUCTION SHALL BE RESTORED TO PRE-EXISTING CONDITIONS OR BETTER.
9. CONTRACTOR SHALL SAW CUT ALONG PAVEMENT, OTHER ADJOINING SURFACES TO REMAIN. CONTRACTOR SHALL PROVIDE CLEAN, STRAIGHT SAW CUTS IN AREAS INDICATED.
10. CONTRACTOR SHALL COORDINATE WITH N.T.U.A. AND OWNER TO DETERMINE IF ANY DEMOLISHED UTILITIES SHALL BE SALVAGED.
11. ALL TREES AND SHRUBS, INCLUDING ROOTS WITHIN 10 FT OF STRUCTURES AND UTILITIES, AND 5 FT OF SIDEWALKS, TYPICAL, ALL UNITS. REMOVE ALL ROOTS EXTENDING BELOW EXTENTS OF NEW SIDEWALK OR PARKING. NO STUMPS ARE PERMITTED TO REMAIN.
12. THE CONTRACTOR SHALL VERIFY THE LIMITS OF DEMOLITION FOR THE UTILITY TRENCHING. ANY ADDITIONAL DEMOLITION ITEMS (NOT SHOWN ON PLAN) SHALL BE INCLUDED IN THIS BID.
13. CLEAR ALL WEED GROWTH, DEBRIS, AND SEDIMENT WITHIN AND AROUND ALL ROADWAYS, CURB AND GUTTER, AND CHANNELS.
14. ALL EXISTING PARKING LOT SITE LIGHTING SHALL BE REMOVED, INCLUDING ALL FOUNDATION, ELECTRICAL LINES, CONDUITS, ETC.

DEMOLITION NOTES

1. EXISTING GAS LINE TO BE ABANDONED IN PLACE AND/OR REMOVED AS NEEDED TO COMPLETE PROPOSED WORK. EXISTING GAS LINE TO BE CAPPED.
2. REMOVE AND SALVAGE EXISTING ELECTRICAL POWER POLE.
3. EXISTING WATER LINE TO BE ABANDONED IN PLACE AND/OR REMOVED AS NEEDED TO COMPLETE PROPOSED WORK. EXISTING WATER LINE TO BE CAPPED.
4. REMOVE AND DISPOSE EXISTING TREE.
5. REMOVE AND SALVAGE EXISTING ELECTRICAL SITE LIGHT AND REMOVE AND DISPOSE OF OVERHEAD ELECTRICAL LINE.

LEGEND

- BOUNDARY LINE
- EXISTING FENCE
- EXISTING WATER LINE
- EXISTING SEWER MAIN
- EXISTING OVERHEAD ELECTRIC
- EXISTING UNDERGROUND ELECTRIC
- EXISTING GAS LINE
- EXISTING COMMUNICATIONS LINE
- EXISTING GATE VALVE
- EXISTING WATER METER
- EXISTING CURB STOP
- EXISTING DOMESTIC STOP
- EXISTING CLEANOUT
- EXISTING SEWER MANHOLE
- EXISTING FIRE HYDRANT

HATCH LEGEND

- DEMO/ABANDON HATCH
- EXISTING ASPHALT TO REMAIN

0 15 30 60 FEET
1" = 30'

KNOW WHAT'S BELOW - CALL BEFORE YOU DIG.
1-800-528-5011

Know what's below. Call before you dig.

HOZHO ENGINEERING, LLC
2733 E. Lakin Dr.
Suite 2
Flagstaff, AZ 86004
ph: (928) 779-0420
www.hozho-eng.com

STAMP

ALTON L. WILLIAMS
NEW MEXICO
22081
PROFESSIONAL ENGINEER
11/03/23

DYRON MURPHY ARCHITECTS, P.C.
4505 Montbel Place NE, Albuquerque, New Mexico 87107

SHIPROCK PINNACLE HOTEL & RESTAURANT

SHIPROCK, NEW MEXICO

100% CONSTRUCTION DOCUMENTS

ISSUED FOR CONSTRUCTION

NOVEMBER 3, 2023

PROJECT NUMBER	DRAWN BY	PROJ MGR
23009	HOZHO	AW

DEMOLITION PLAN

Sheet Title

Sheet Number of

C200

N:\Projects\2023\23009 Shiprock Pinnacle Hotel\DWG\23009-C200.dwg
10/25/2023 3:50:11 PM
DYRON MURPHY ARCHITECTS P.C.

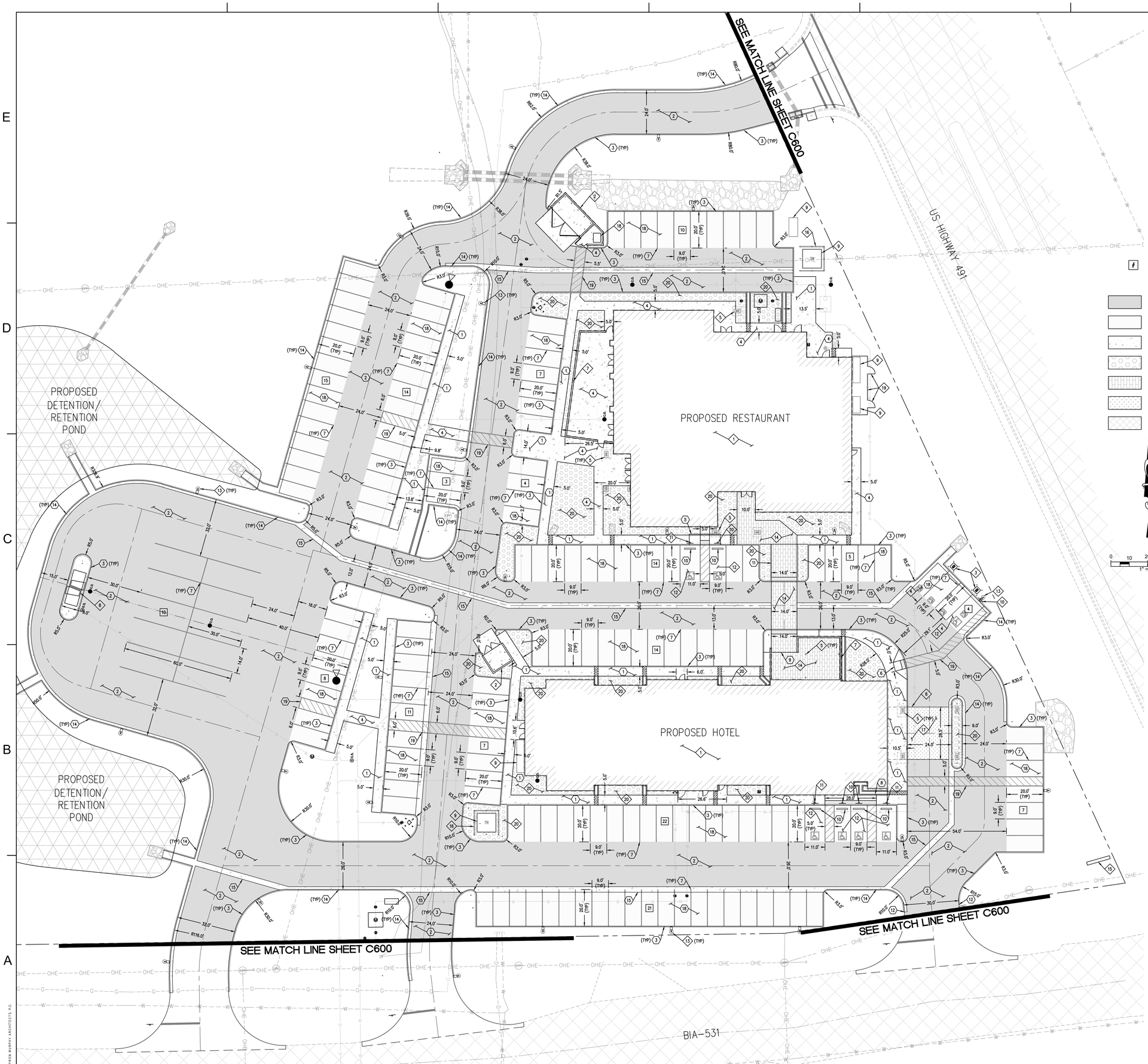

CONSTRUCTION NOTES

1. CONSTRUCT CONCRETE SIDEWALK ALONG CURBING PER DETAIL "B" ON DETAIL SHEET C800.
2. CONSTRUCT 3" A.C. MIN OVER 8" A.B.C. (HEAVY DUTY) PER SPECIFICATIONS AND GEOTECHNICAL ENGINEERING REPORT PREPARED BY GEOMAT INC. DATED JULY 27, 2023. SEE HEAVY SECTION PER DETAIL "1" ON DETAIL SHEET C800.
3. CONSTRUCT SINGLE VERTICAL CURB PER DETAIL "F" ON DETAIL SHEET C800.
4. CONSTRUCT CONCRETE SIDEWALK PER DETAIL "A" ON DETAIL SHEET C800.
5. INSTALL CURB RAMP TYPE "A" PER DETAIL "C" ON DETAIL SHEET C800.
6. INSTALL CURB RAMP PER DETAIL "D" ON DETAIL SHEET C800.
7. INSTALL 4" SOLID WHITE LINE.
8. INSTALL CURB RAMP, TYPE "B" PER DETAIL "C" ON DETAIL SHEET C800.
9. INSTALL SIDEWALK RAMP PER DETAIL "D" ON DETAIL SHEET C802.
10. INSTALL PRECAST SAFETY CURB PER DETAIL "L" ON DETAIL SHEET C800.
11. INSTALL CURB RAMP PER DETAIL "C" ON DETAIL SHEET C802.
12. CONSTRUCT CURB TERMINATION PER DETAIL "J" ON DETAIL SHEET C800.
14. CONSTRUCT VERTICAL CURB AND GUTTER PER DETAIL "G" ON DETAIL SHEET C800.
15. CONSTRUCT 3' CONCRETE VALLEY GUTTER PER DETAIL "E" ON DETAIL SHEET C800.
18. CONSTRUCT 3.5" A.C. MIN OVER 6" A.B.C. (LIGHT DUTY) PER SPECIFICATIONS AND GEOTECHNICAL ENGINEERING REPORT PREPARED BY GEOMAT INC. DATED JULY 27, 2023. SEE LIGHT DUTY SECTION PER DETAIL "1" ON DETAIL SHEET C800.
19. INSTALL 6" WHITE LINE.

PARKING STALL LEGEND

#	PARKING STALL COUNT

PAVING HATCH LEGEND

- ASPHALT PAVEMENT AREAS (HEAVY DUTY)
- ASPHALT PAVEMENT AREAS (LIGHT DUTY)
- CONCRETE AREAS
- LANDSCAPE ROCK AREAS REFER TO ARCHITECTURAL PLANS
- BRICK PAVER AREAS REFER TO ARCHITECTURAL PLANS
- STAMPED CONCRETE AREAS REFER TO ARCHITECTURAL PLANS
- EXISTING ASPHALT (TO REMAIN)

0 10 20 40 FEET
1" = 20'

REFERENCE NOTES

1. NEW BUILDING REFER TO ARCHITECTURAL & STRUCTURAL PLAN
2. TRASH ENCLOSURE REFER TO ARCHITECTURAL PLAN
3. ELECTRICAL VEHICLE CHARGING RECEPTACLES REFER TO ELECTRICAL PLAN
4. ELECTRICAL VEHICLE CHARGING PARKING REFER TO ARCHITECTURAL PLAN
5. COLUMNS REFER TO ARCHITECTURAL & STRUCTURAL PLAN
6. PORTE-COCHERE REFER TO ARCHITECTURAL PLAN
7. SITE WALL REFER TO STRUCTURAL PLAN
8. RV DUMP AND WATER STATION REFER TO ARCHITECTURAL PLAN
9. ELECTRICAL EQUIPMENT CONCRETE PAD REFER TO ELECTRICAL PLAN.
10. ACCESSIBLE PARKING SIGN REFER TO ARCHITECTURAL PLAN.
11. ACCESSIBLE PARKING AND VAN ACCESSIBLE PARKING SIGN REFER TO ARCHITECTURAL PLAN
12. ACCESSIBLE PARKING REFER TO ARCHITECTURAL PLAN.
13. SITE LIGHTING REFER TO ELECTRICAL PLAN.
14. BRICK PAVERS REFER TO ARCHITECTURAL PLAN.
15. MONUMENT SIGN REFER TO ARCHITECTURAL PLAN.
16. BOLLARD AND RAILINGS REFER TO ARCHITECTURAL PLAN.
17. STAMPED CONCRETE REFER TO ARCHITECTURAL PLAN.
18. GREASE BIN REFER TO ARCHITECTURAL PLAN.
19. FENCE AND GATE REFER TO ARCHITECTURAL PLAN.
20. LANDSCAPE ROCK REFER TO ARCHITECTURAL PLAN.

HOZHO ENGINEERING, LLC
2733 E. Lakin Dr.
Suite 2
Flagstaff, AZ 86004
ph: (928) 779-0420
www.hozho-eng.com

STAMP

ALTON L. WILLIAMS
NEW MEXICO
22081
PROFESSIONAL ENGINEER
11/03/23

DYRON MURPHY ARCHITECTS, P.C.
4505 Montbel Place NE, Albuquerque, New Mexico 87107

SHIPROCK PINNACLE HOTEL & RESTAURANT

SHIPROCK, NEW MEXICO

100% CONSTRUCTION DOCUMENTS

ISSUED FOR CONSTRUCTION

NOVEMBER 3, 2023

PROJECT NUMBER	DRAWN BY	PROJ MGR
23009	HOZHO	AW

CIVIL SITE PLAN

Sheet Title

Sheet Number C300 of

N:\Projects\2023\2309 Shiprock Pinnacle Hotel\DWG\2309C100-SP.dwg
10/20/2023 2:50 PM
DYRON MURPHY ARCHITECTS, P.C.

GENERAL GRADING AND DRAINAGE NOTES

1. IT SHALL BE THE RESPONSIBILITY OF THE CONTRACTOR TO VERIFY ALL QUANTITIES INCLUDING EXCAVATION, BORROW, EMBANKMENT, SHRINK OR SWELL, GROUND COMPACTION, HAUL, AND ANY OTHER ITEMS PRIOR TO CONSTRUCTION TO COMPLETE THE GRADING TO THE ELEVATIONS SHOWN ON THE PLANS. IT IS THE CONTRACTOR'S RESPONSIBILITY TO NOTIFY THE ENGINEER OF ANY MAJOR DISCREPANCIES PRIOR TO CONSTRUCTION.
2. THE CONTRACTOR SHALL REFER TO THE ARCHITECTURAL AND MECHANICAL PLANS AND SPECIFICATIONS FOR BUILDING DIMENSIONS AND ACTUAL LOCATIONS OF ALL UTILITIES ENTERING THE BUILDING INCLUDING SANITARY SEWER LATERALS, DOMESTIC WATER, ELECTRIC, TELEPHONE, AND GAS SERVICES.
3. ELEVATIONS REFERRED TO HEREIN ARE DESIGN ELEVATIONS ONLY. ANY FIELD DESIGN CHANGES PROPOSED BY THE CONTRACTOR SHALL REQUIRE PRIOR WRITTEN APPROVAL BY THE ARCHITECT, OWNER OR OWNER'S REPRESENTATIVE.
4. EARTHWORK SHALL CONFORM TO PROJECT SPECIFICATIONS AND GEOTECHNICAL ENGINEERING REPORT PREPARED BY GEOMAT, INC. (INCLUDED IN THE SPECIFICATIONS).
5. DRAINAGE DITCHES/SWALES LOCATED AROUND THE HOUSING UNITS SHALL BE GRADED TO DRAIN AND DISCHARGE AWAY FROM THE HOUSING UNITS. ALL AREAS BEYOND DITCHES/SWALES GRADING SHALL REMAIN INTACT.
6. PROPOSED UNPAVED FINISHED GRADES ADJACENT TO THE HOUSING FOUNDATIONS SHALL SLOPE AWAY FROM THE UNIT FOUNDATION AT A 5% MINIMUM SLOPE FOR A MINIMUM DISTANCE OF 10 FT.
7. PROPOSED ROOF DRAIN DOWNSPOUT LOCATIONS SHALL HAVE A SPLASH PAD WITH ADDITIONAL RIPRAP APRON/SWALE EXTENDING FROM THE SPLASH PAD TO THE ADJACENT TOE OF SLOPE. DISCHARGE FROM THE DOWNSPOUTS SHALL DRAIN AWAY FROM THE HOUSING UNITS TO ADJACENT DOWNSTREAM DITCHES/SWALES.
8. ANY UTILITY ADJUSTMENTS SHALL BE IN ACCORDANCE WITH N.T.U.A. SPECIFICATIONS.
9. THE CONTRACTOR SHALL FIELD VERIFY ALL FINISH FLOOR ELEVATIONS.
10. FINISH GRADING SHALL BE UNIFORM AND SMOOTH PER THE PROJECT SPECIFICATIONS.
11. IMPORTED MATERIAL SHALL BE TESTED IN CONFORMANCE WITH THE GEOTECHNICAL REPORT AND PROJECT SPECIFICATIONS.

CONSTRUCTION NOTES

1. CONSTRUCT CONCRETE SPILLWAY WITH RIPRAP PER DETAIL "N" ON DETAIL SHEET C800.
2. INSTALL 24" DIA. H.D.P.E. N-12 PIPE WITH WATERTIGHT JOINTS.
3. INSTALL H.D.P.E. END SECTION AND RIPRAP PER DETAIL "Y" ON DETAIL SHEET C801. END SECTION TO MATCH CORRESPONDING CULVERT DIAMETER.
4. CONSTRUCT CONCRETE SIDEWALK CULVERT OVER 4" A.B.C. PER DETAIL "B" ON DETAIL SHEET C801.
5. CONSTRUCT SIDEWALK CULVERT RIPRAP, 12" THICK PER DETAIL "D" ON DETAIL SHEET C801.
6. CONSTRUCT CONCRETE CHANNEL AND SIDEWALK CULVERT PER DETAIL "A" ON DETAIL SHEET C801.
7. CONSTRUCT CONCRETE SPILLWAY PER DETAIL "G" ON DETAIL SHEET C800.
8. INSTALL 12" DIA. H.D.P.E. N-12 PIPE WITH WATERTIGHT JOINTS.
9. CONSTRUCT SIDEWALK CULVERT AND RIPRAP PER DETAIL "C" ON DETAIL SHEET C801.
10. CONSTRUCT CONCRETE SPILLWAY PER DETAIL "E" ON DETAIL SHEET C801.
11. CONSTRUCT CONCRETE SPILLWAY PER DETAIL "G" ON DETAIL SHEET C801.
12. CONSTRUCT WALL OPENING PER DETAIL "R" ON DETAIL SHEET C800.
13. CONSTRUCT DOUBLE PIPE, 'U' TYPE HEADWALL WITH RIPRAP PER DETAILS "A" AND "B" ON DETAIL SHEET C802.
14. INSTALL RIPRAP SLOPE PROTECTION PER DETAIL "S" ON DETAIL SHEET C800.

GRADING DESCRIPTIONS LEGEND

FFE	FINISH FLOOR ELEV.
P	ASPHALT PAVEMENT ELEV.
C	CONCRETE PAVEMENT ELEV.
TC	TOP OF CURB ELEV.
FG	FINISH GRADE ELEV.
FL	FLOWLINE ELEV.
CL	CENTER LINE
ME	MATCH EXISTING ELEV.
GR	GRATE ELEV.
RIM	RIM ELEV.
INV	INVERT ELEV.
N	NORTHING COORDINATE
E	EASTING COORDINATE

HOZHO ENGINEERING, LLC
2733 E. Lakin Dr.
Suite 2
Flagstaff, AZ 86004
ph: (928) 779-0420
www.hozho-eng.com

STAMP

ALLEN L. WILLIAMS
NEW MEXICO
22081
PROFESSIONAL ENGINEER
11/03/23

DYRON MURPHY ARCHITECTS, P.C.
4505 Montbel Place NE, Albuquerque, New Mexico 87107

SHIPROCK PINNACLE HOTEL & RESTAURANT

SHIPROCK, NEW MEXICO

100% CONSTRUCTION DOCUMENTS

ISSUED FOR CONSTRUCTION

NOVEMBER 3, 2023

PROJECT NUMBER	DRAWN BY	PROJ MGR
23009	HOZHO	AW

GRADING & DRAINAGE PLAN

Sheet Title

Sheet Number

C400

of

GRADING DESCRIPTIONS LEGEND

FFE . . . . . FINISH FLOOR ELEV.
P . . . . . ASPHALT PAVEMENT ELEV.
C . . . . . CONCRETE PAVEMENT ELEV.
TC . . . . . TOP OF CURB ELEV.
FG . . . . . FINISH GRADE ELEV.
FL . . . . . FLOWLINE ELEV.
CL . . . . . CENTER LINE
ME . . . . . MATCH EXISTING ELEV.
GR . . . . . GRATE ELEV.
RIM . . . . . RIM ELEV.
INV . . . . . INVERT ELEV.
N . . . . . NORTHING COORDINATE
E . . . . . EASTING COORDINATE

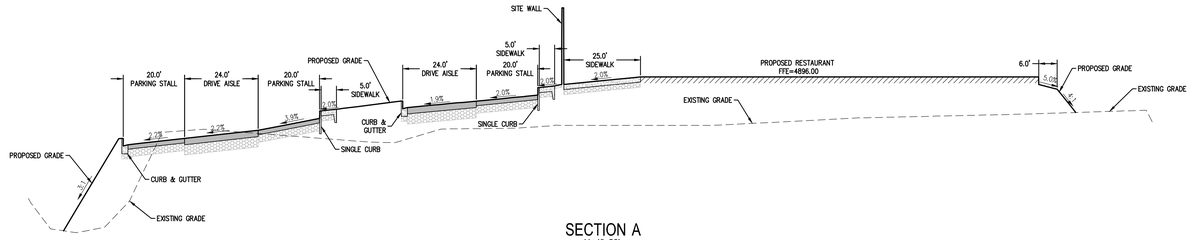

SECTION A
H: 1"=20'
V: 1"=4'

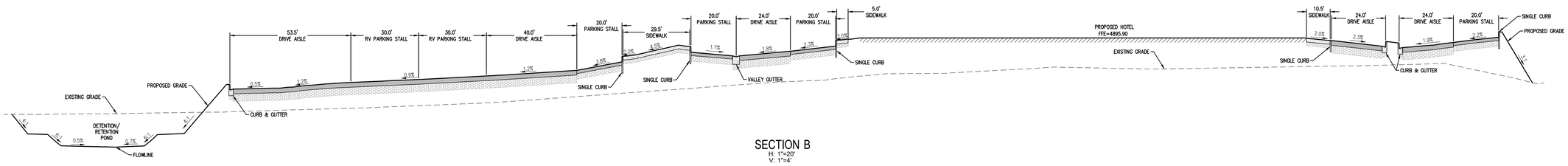

SECTION B
H: 1"=20'
V: 1"=4'

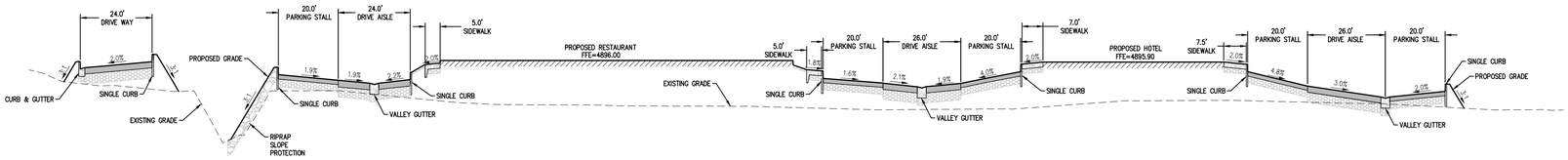

SECTION C
H: 1"=20'
V: 1"=4'

0 10 20 40 FEET
HORIZONTAL:1" = 20'
VERTICAL:1" = 4'

HOZHO ENGINEERING, LLC
2733 E. Lakin Dr.
Suite 2
Flagstaff, AZ 86004
ph: (928) 779-0420
www.hozho-eng.com

STAMP

ALTON L. WILLIAMS
NEW MEXICO
22081
PROFESSIONAL ENGINEER
11/03/23

DYRON MURPHY ARCHITECTS, P.C.

4505 Montbel Place NE, Albuquerque, New Mexico 87107

SHIPROCK PINNACLE HOTEL & RESTAURANT

SHIPROCK, NEW MEXICO

100% CONSTRUCTION DOCUMENTS

ISSUED FOR CONSTRUCTION

NOVEMBER 3, 2023

PROJECT NUMBER	DRAWN BY	PROJ MGR
23009	HOZHO	AW

GRADING SECTIONS

Sheet Title

Sheet Number of

C401

N:\Projects\2023\23009 Shiprock Pinnacle Hotel\DWG\23009CAD\C401.dwg

10/20/2023 5:18:19 PM

DYRON MURPHY ARCHITECTS P.C.

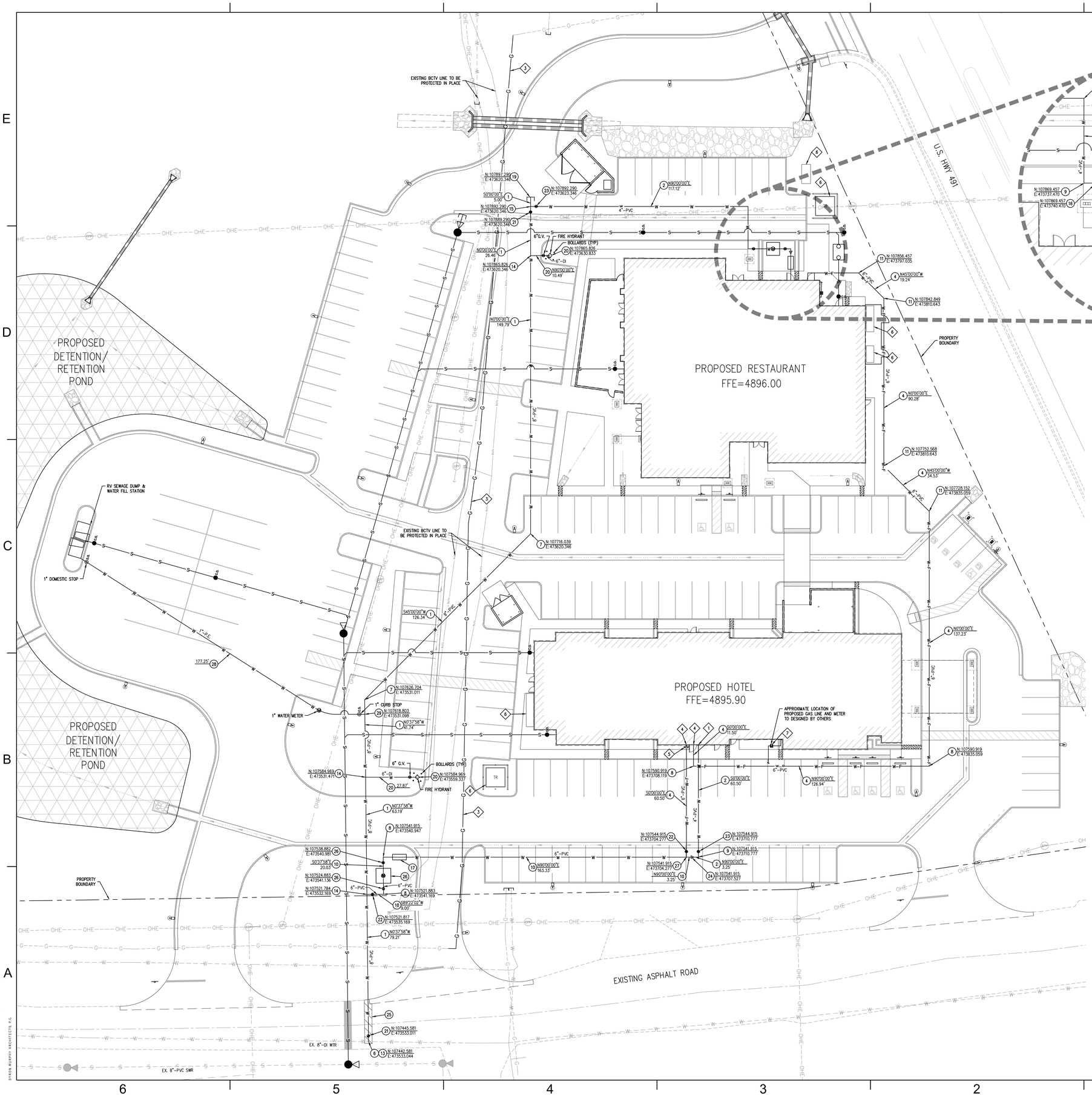

WATER NOTES

1. INSTALL 8" C900 DR18 PVC CLASS 235 PSI WATER LINE PER N.T.U.A TRENCH DETAIL "WS-15" ON DETAIL SHEET C811.
2. INSTALL 4" C900 DR18 PVC CLASS 235 PSI WATER LINE PER N.T.U.A STD. DETAIL "WS-15" ON DETAIL SHEET C811.
3. INSTALL 3" SDR 21 PVC CLASS 200 PSI WATER LINE PER N.T.U.A STD. DETAIL "WS-15" ON DETAIL SHEET C811.
4. INSTALL 6" C900 DR18 PVC CLASS 235 PSI FIRE LINE PER N.T.U.A TRENCH DETAIL "WS-15" ON DETAIL SHEET C811.
5. CONNECT TO EXISTING WATER LINE.
6. INSTALL 8"-45° DUCTILE IRON BEND WITH MJ MEGALUG RESTRAINT AND THRUST BLOCK PER N.T.U.A STD. DETAILS "WS-19" AND "WS-19A" ON DETAIL SHEET C810.
7. INSTALL 6"-90° DUCTILE IRON BEND WITH MJ MEGALUG RESTRAINT AND THRUST BLOCK PER N.T.U.A STD DETAILS "WS-19" AND "WS-19A" ON DETAIL SHEET C810.
8. INSTALL 4"-90° DUCTILE IRON BEND WITH MJ MEGALUG RESTRAINT AND THRUST BLOCK PER N.T.U.A STD. DETAILS "WS-19" AND "WS-19A" ON DETAIL SHEET C810.
9. INSTALL 6" C900 DR18 PVC 235 PSI WATER LINE PER N.T.U.A. TRENCH DETAIL "WS-15" ON DETAIL SHEET C811.
10. INSTALL 6"-45° DUCTILE IRON BEND WITH MJ MEGALUG RESTRAINT AND THRUST BLOCK PER N.T.U.A STD. DETAILS "WS-19" AND "WS-19A" ON DETAIL SHEET C810.
11. INSTALL 4"X3" DUCTILE IRON REDUCER WITH MJ MEGALUG RESTRAINT AND THRUST BLOCK PER N.T.U.A STD. DETAILS "WS-19" AND "WS-19A" ON DETAIL SHEET C810.
12. INSTALL 8"X8" DUCTILE IRON TEE WITH MJ MEGALUG RESTRAINT AND THRUST BLOCK PER N.T.U.A STD. DETAILS "WS-16", "WS-19", AND "WS-19A" ON DETAIL SHEET C810.
13. INSTALL 8"X6" DUCTILE IRON TEE WITH MJ MEGALUG RESTRAINT AND THRUST BLOCK PER N.T.U.A STD. DETAILS "WS-16", "WS-19", AND "WS-19A" ON DETAIL SHEET C810.
14. INSTALL 6"X4" DUCTILE IRON TEE WITH MJ MEGALUG RESTRAINT AND THRUST BLOCK PER N.T.U.A STD. DETAILS "WS-16", "WS-19", AND "WS-19A" ON DETAIL SHEET C810.
15. INSTALL 3" TURBINE METER WITH 3" P.R.V. ASSEMBLY WITH 4" GATE VALVES PER N.T.U.A STD. DETAILS "WS-6" AND "WS-6A" ON DETAIL SHEET C811.
16. INSTALL 6" BACKFLOW PREVENTION ASSEMBLY PER N.T.U.A. STD. DETAIL "WS-26" AND "WS-26A" ON DETAIL SHEET C811.
17. INSTALL 3" BACKFLOW PREVENTION ASSEMBLY WITH HEAT ENCLOSURE PER N.T.U.A. STD. DETAILS "WS-26" AND "WS-26A" ON DETAIL SHEET C811.
18. INSTALL 8" DUCTILE IRON END CAP WITH MJ MEGALUG RESTRAINT AND THRUST BLOCK PER N.T.U.A STD. DETAILS "WS-19" AND "WS-19A" ON DETAIL SHEET C810.
19. INSTALL FIRE HYDRANT COMPLETE WITH 6" DUCTILE IRON PIPE, 6" GATE VALVE, AND BOLLARDS PER N.T.U.A STD DETAILS "WS-12" AND "WS-12A" ON DETAIL SHEET C811.
20. INSTALL 8" GATE VALVE, MJ X MJ, PER N.T.U.A STD DETAILS "WS-14" ON DETAIL SHEET C811.
21. INSTALL 6" GATE VALVE, MJ X MJ, PER N.T.U.A STD DETAILS "WS-14" ON DETAIL SHEET C811.
22. INSTALL 4" GATE VALVE, MJ X MJ, PER N.T.U.A STD DETAILS "WS-14" ON DETAIL SHEET C811.
23. INSTALL 6"x4" DUCTILE IRON REDUCER WITH MJ MEGALUG RESTRAINT AND THRUST BLOCK PER N.T.U.A STD. DETAILS "WS-19" AND "WS-19A" ON DETAIL SHEET C810.
24. SAWCUT, REMOVE, AND DISPOSE OF EXISTING PAVEMENT PER SPECIFICATIONS. CONSTRUCT PAVEMENT REPLACEMENT PER SPECIFICATIONS. SAWCUT AND PAVEMENT REPLACEMENT SHALL BE PER DETAIL "A" ON DETAIL SHEET C821.
25. INSTALL 4"x2" METER ASSEMBLY ON 6" WATER LINE WITH 4" GATE VALVES PER N.T.U.A STD. DETAILS "WS-8" AND "WS-8A" ON DETAIL SHEET C810.
26. INSTALL 6"X6" DUCTILE IRON TEE WITH MJ MEGALUG RESTRAINT AND THRUST BLOCK PER N.T.U.A STD. DETAILS "WS-16", "WS-19", AND "WS-19A" ON DETAIL SHEET C810.
27. INSTALL 1" P.E. (SIDR-7, 250 PSI) WATER SERVICES, 1" DOMESTIC STOP, 1" WATER METER, 1" CURB STOP PER N.T.U.A SPECIFICATIONS AND N.T.U.A STD. DETAILS "WS-1A", "WS-1C", AND "WS-1D" ON DETAIL SHEET C810. NEW SERVICE SHALL INCLUDE ALL ASSOCIATED PIPING AND ACCESSORIES.
28. INSTALL 6"X1" DOUBLE STRAP SADDLE WITH 1" CORPORATION STOP PER N.T.U.A STD DETAIL "WS-1A" AND "WS-1C" ON DETAIL SHEET C810.

UTILITY DESCRIPTIONS LEGEND

S . . . . . SLOPE
INV/I.E. . . . . INVERT ELEV.
RIM . . . . . RIM ELEV.
TOP . . . . . TOP OF PIPE ELEV.
BOT . . . . . BOTTOM OF PIPE ELEV.
WTR . . . . . WATER
SWR . . . . . SEWER
SD . . . . . STORM DRAIN
N . . . . . NORTHING COORDINATE
E . . . . . EASTING COORDINATE

LEGEND

BOUNDARY LINE
PROPOSED WATER LINE
PROPOSED SEWER LINE
PROPOSED GAS LINE
PROPOSED FENCE
EXISTING WATER LINE
EXISTING SEWER LINE
EXISTING FENCE
EXISTING OVERHEAD ELECTRIC
EXISTING UNDERGROUND ELECTRIC
EXISTING UNDERGROUND GAS LINE
EXISTING COMMUNICATIONS LINE
PROPOSED REDUCER
PROPOSED GATE VALVE
EXISTING GATE VALVE
WATER METER
C.S. CURB STOP
D.S. DOMESTIC STOP
C.O. CLEANOUT
PROPOSED SEWER MANHOLE
EXISTING SEWER MANHOLE
FIRE HYDRANT
GAS METER

REFERENCE NOTES

1. CONNECT TO BUILDING STUB. SEE PLUMBING PLANS FOR CONTINUATION. CONTRACTOR SHALL VERIFY EXACT LOCATION & INVERT WITH PLUMBING PLANS PRIOR TO CONSTRUCTION. NOTIFY OWNER'S AGENT OF ANY DISCREPANCIES.
3. APPROXIMATE LOCATION OF PROPOSED HIGH PRESSURE GAS LINE. GAS LINE TO BE DESIGNED BY OTHERS
4. CONNECT TO BUILDING STUB REFER TO FIRE SUPPRESSION PLANS FOR CONTINUATION
5. FIRE DEPARTMENT CONNECTION REFER TO FIRE SUPPRESSION PLANS
6. ELECTRICAL EQUIPMENT REFER TO ELECTRICAL PLAN
7. GAS LINE AND GAS METER REFER TO PLUMBING PLANS

0 10 20 40 FEET
1" = 20'

KNOW WHAT'S BELOW - CALL BEFORE YOU DIG. 1-800-528-5011

Know what's below. Call before you dig.

HOZHO ENGINEERING, LLC
2733 E. Lakin Dr. Suite 2
Flagstaff, AZ 86004
ph: (928) 779-0420
www.hozho-eng.com

STAMP

ALTON L. WILLIAMS NEW MEXICO 22081 PROFESSIONAL ENGINEER 11/03/23

DYRON MURPHY ARCHITECTS, P.C.
4505 Montbel Place NE, Albuquerque, New Mexico 87107

SHIPROCK PINNACLE HOTEL & RESTAURANT

SHIPROCK, NEW MEXICO

100% CONSTRUCTION DOCUMENTS

ISSUED FOR CONSTRUCTION

NOVEMBER 3, 2023

PROJECT NUMBER	DRAWN BY	PROJ MGR
23009	HOZHO	AW

WATER PLAN

Sheet Title

Sheet Number C500 of

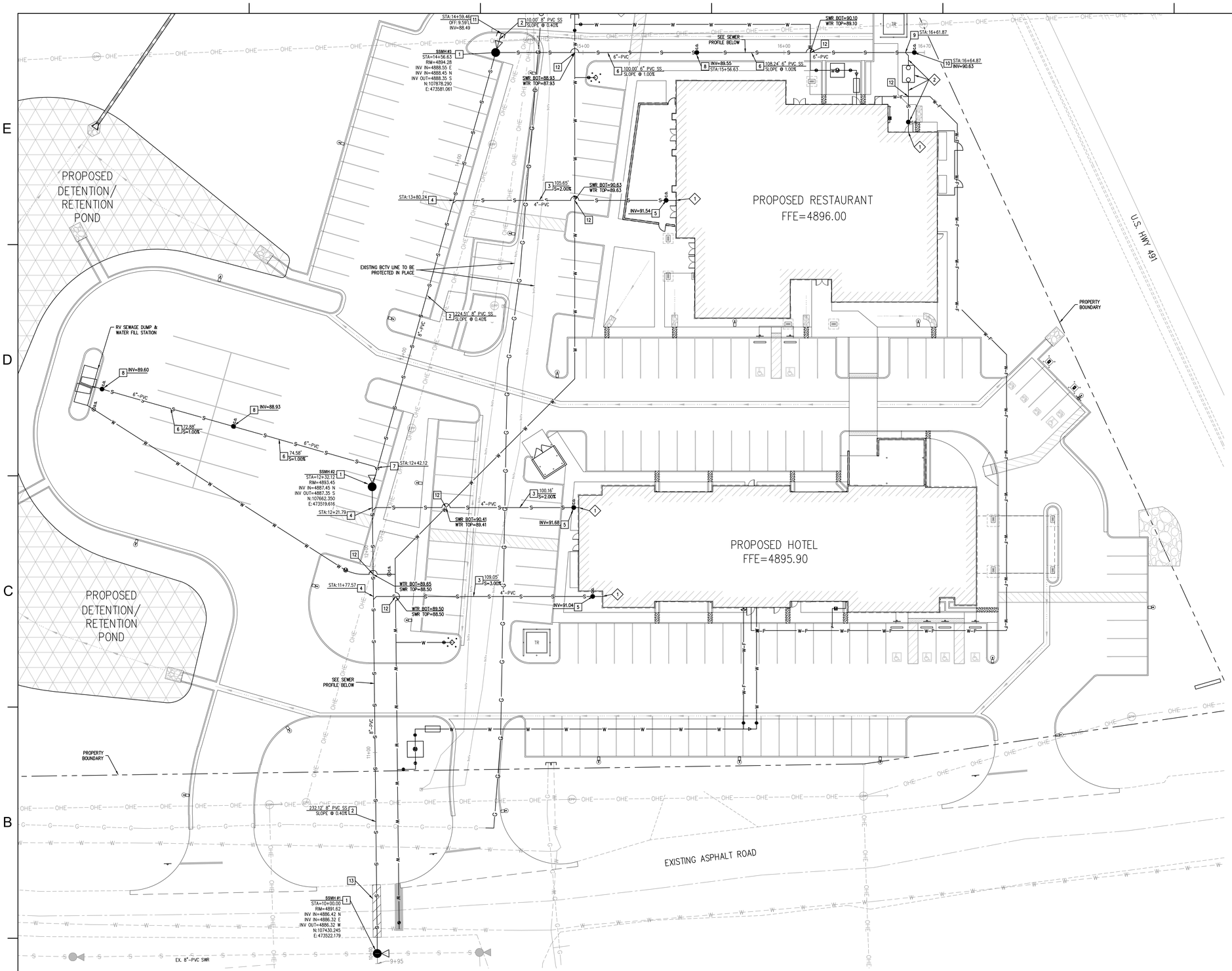

SEWER NOTES

1. CONSTRUCT 4' DIAMETER SEWER MANHOLE PER N.T.U.A STD. DETAILS "WWS-4", "WWS-5", AND "WWS-6" ON DETAIL SHEET C820.
2. INSTALL 8" SDR-35 PVC SEWER LINE PER N.T.U.A TRENCH DETAIL "WWS-10", ON DETAIL SHEET C821.
3. INSTALL 4" SDR-35 PVC SEWER LINE PER N.T.U.A STD. DETAILS "WWS-1", "WWS-1A", AND "WWS-1B" ON DETAIL SHEET C820.
4. INSTALL 4"x8" WYE TO CONNECT TO 8" SEWER LINE PER N.T.U.A. STD. DETAILS "WWS-1" AND "WWS-1A" ON DETAIL SHEET C820.
5. INSTALL 4" TWO-WAY SEWER CLEANOUT PER N.T.U.A STD. DETAILS "WWS-1" AND "WWS-1A" ON DETAIL SHEET C820. SEWER CLEANOUT LOCATED IN CONCRETE SHALL BE FLUSH WITH FINISH GRADE AND HAVE BRASS CAP.
6. INSTALL 6" SDR-35 PVC SEWER LINE PER N.T.U.A TRENCH DETAIL "WWS-10" ON DETAIL SHEET C821.
7. INSTALL 6"x8" WYE TO CONNECT TO 8" SEWER LINE PER N.T.U.A. STD. DETAILS "WWS-1" AND "WWS-1A" ON DETAIL SHEET C820. DETAILS SPECIFY 4" PIPE, INSTALLATION SHALL BE SIMILAR FOR 6" PIPE.
8. INSTALL 6" TWO-WAY SEWER CLEANOUT PER N.T.U.A STD. DETAILS "WWS-1" AND "WWS-1A" ON DETAIL SHEET C820. DETAILS SPECIFY 4" PIPE, INSTALLATION SHALL BE SIMILAR FOR 6" PIPE. SEWER CLEANOUT AND CONCRETE COLLAR LOCATED IN ROADWAY SHALL BE FLUSH WITH FINISH GRADE AND HAVE TRAFFIC RATED BRASS CAP.
9. INSTALL 4"x6" WYE TO CONNECT TO 6" SEWER LINE PER N.T.U.A. STD. DETAILS "WWS-1" AND "WWS-1A" ON DETAIL SHEET C820.
10. INSTALL 6" CLEANOUT PER N.T.U.A. STD. DETAIL "WWS-13" ON DETAIL SHEET C820.
11. INSTALL 8" END CAP.
12. INSTALL WATER AND SEWER VERTICAL SEPARATION PER N.T.U.A. REQUIREMENTS AND N.T.U.A. STD. DETAIL "WWS-8" ON DETAIL SHEET C821.
13. SAWCUT, REMOVE, AND DISPOSE OF EXISTING PAVEMENT PER SPECIFICATIONS. CONSTRUCT PAVEMENT REPLACEMENT PER SPEOFICATIONS. SAWCUT AND PAVEMENT REPLACEMENT SHALL BE PER DETAIL "A" ON DETAIL SHEET C821.

REFERENCE NOTES

1. CONNECT TO BUILDING STUB. SEE PLUMBING PLANS FOR CONTINUATION. CONTRACTOR SHALL VERIFY EXACT LOCATION & INVERT WITH PLUMBING PLANS PRIOR TO CONSTRUCTION. NOTIFY OWNER'S AGENT OF ANY DISCREPANCES.
2. GREASE TRAP, CLEANOUTS, PIPING UPSTREAM,/DOWNSTREAM OF GREASE TRAP REFER TO PLUMBING PLAN

UTILITY DESCRIPTIONS LEGEND

S . . . . . SLOPE
INV/I.E. . . . . INVERT ELEV.
RIM . . . . . RIM ELEV.
TOP . . . . . TOP OF PIPE ELEV.
BOT . . . . . BOTTOM OF PIPE ELEV.
WTR . . . . . WATER
SWR . . . . . SEWER
SD . . . . . STORM DRAIN
N . . . . . NORTHING COORDINATE
E . . . . . EASTING COORDINATE

LEGEND

- BOUNDARY LINE
- PROPOSED WATER LINE
- PROPOSED SEWER LINE
- PROPOSED GAS LINE
- PROPOSED FENCE
- EXISTING WATER LINE
- EXISTING SEWER LINE
- EXISTING FENCE
- EXISTING OVERHEAD ELECTRIC
- EXISTING UNDERGROUND ELECTRIC
- EXISTING UNDERGROUND GAS LINE
- EXISTING COMMUNICATIONS LINE
- PROPOSED REDUCER
- PROPOSED GATE VALVE
- EXISTING GATE VALVE
- WATER METER
- c.s. CURB STOP
- d.s. DOMESTIC STOP
- c.o. CLEANOUT
- PROPOSED SEWER MANHOLE
- EXISTING SEWER MANHOLE
- FIRE HYDRANT
- GAS METER

0 10 20 40 FEET
HORIZONTAL:1" = 20'
VERTICAL:1" = 4'

KNOW WHAT'S BELOW - CALL BEFORE YOU DIG.
1-800-528-5011

Know what's below. Call before you dig.

HOZHO ENGINEERING, LLC
2733 E. Lakin Dr.
Suite 2
Flagstaff, AZ 86004
ph: (928) 779-0420
www.hozho-eng.com

STAMP

ALTON L. WILLIAMS NEW MEXICO 22081 PROFESSIONAL ENGINEER 11/03/23

DYRON MURPHY ARCHITECTS, P.C.
4505 Montbel Place NE, Albuquerque, New Mexico 87107

SHIPROCK PINNACLE HOTEL & RESTAURANT

SHIPROCK, NEW MEXICO

100% CONSTRUCTION DOCUMENTS

ISSUED FOR CONSTRUCTION

NOVEMBER 3, 2023

PROJECT NUMBER	DRAWN BY	PROJ MGR
23009	HOZHO	AW

SEWER PLAN & PROFILE

Sheet Title

Sheet Number

C501

of

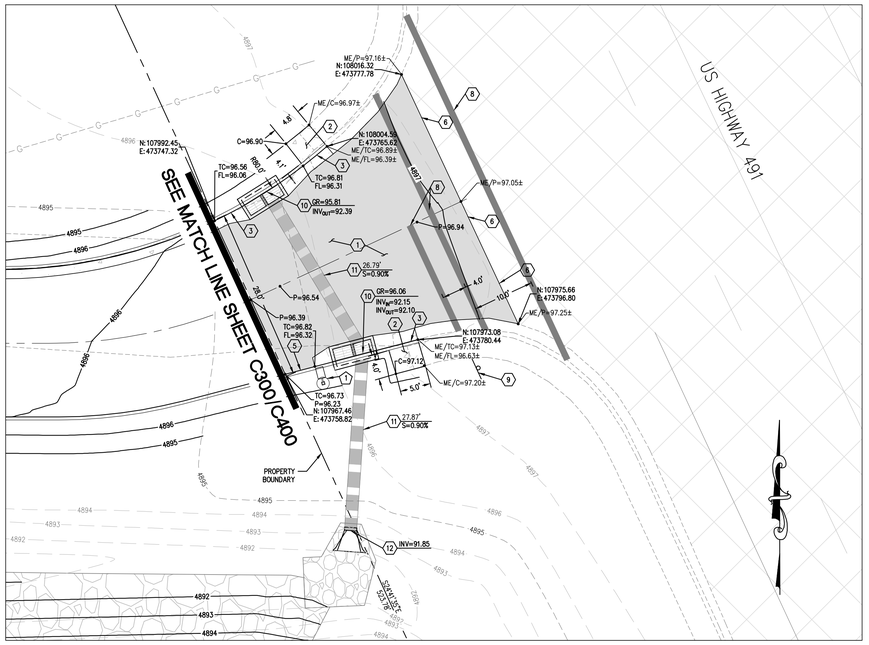

IMPROVEMENT PLAN - NE DRIVEWAY ENTRANCE

0 5 10 20 FEET
1" = 10'

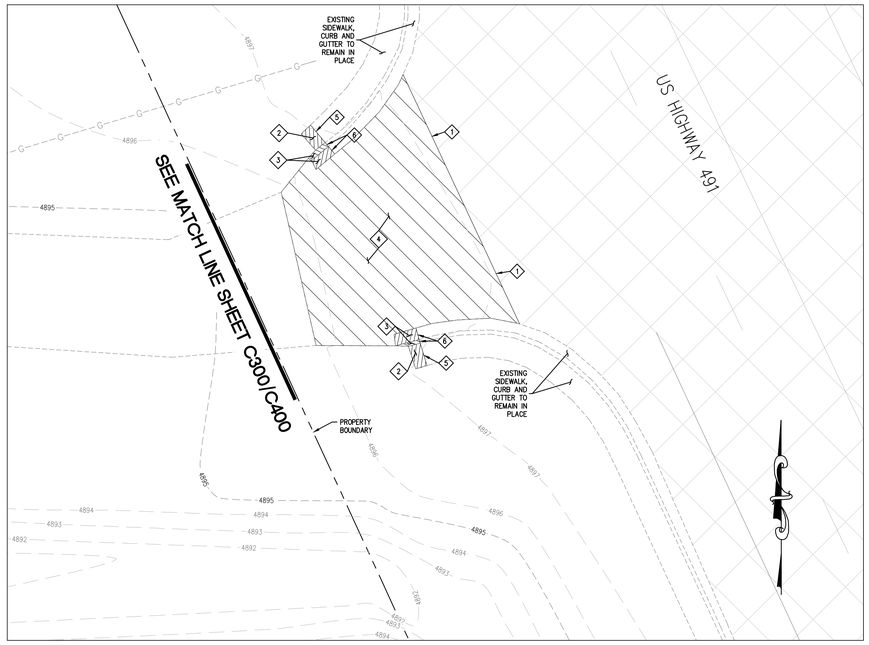

DEMOLITION ITEMS - NE DRIVEWAY ENTRANCE

0 5 10 20 FEET
1" = 10'

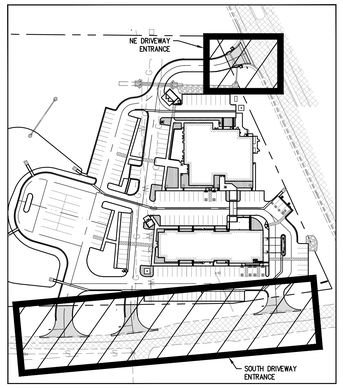

KEYMAP

GENERAL PAVEMENT MARKING AND SIGNAGE NOTES:

1. STRIPING OBLITERATION SHALL BE ACCOMPLISHED WITH NMDOT APPROVED HYDROBLASTING METHODS. IF THE EXISTING SURFACE IS DAMAGED DUE TO THE OBLITERATION, A NEW SURFACE COURSE SHALL BE PLACED AS DIRECTED BY NMDOT
2. THE CONTRACTOR SHALL BE RESPONSIBLE FOR PROVIDING ALL MARKINGS AND SIGNAGE AS SHOWN ON THESE PLANS.
3. FINAL STRIPING TO BE EPOXY PAINT PER SECTION 704 OF THE 2014 NMDOT STANDARD SPECIFICATIONS. STANDARD PAINT IS ACCEPTABLE FOR TEMPORARY STRIPING.
4. ALL SIGNS IN NMDOT RIGHT OF WAY SHALL CONFORM TO THE CURRENT EDITION OF THE NMDOT SIGNING AND MARKING STANDARD DRAWINGS.
5. IMMEDIATELY PRIOR TO REPLACEMENT OF ALL MARKINGS, THE CONTRACTOR SHALL CLEAN THE ROADWAY SURFACE TO THE SATISFACTION OF THE ENGINEER. PAVEMENT TEMPERATURES SHALL NOT BE LESS THAN 55 DEGREES FAHRENHEIT FOR PLACEMENT OF PAVEMENT MARKINGS.
6. SIGNS SHALL BE INSTALLED ON NEW SQUARE TUBE POST WITH FOUNDATIONS AS INDICATED ON NMDOT STD. DWG 701-02-1/3.
7. ALL BOLTS USED TO INSTALL SIGNING SHALL HAVE HEX HEADS, NOT SLOTTED HEADS.
8. THE CONTRACTOR SHALL USE ONLY CADIUM-PLATED STEEL WASHERS, NOT NYLON WASHERS, BETWEEN EACH BOLT HEAD AND THE FACE OF THE SIGN PANEL.
9. ADJUST ALL EXISTING SIGNAGE WITHIN CONSTRUCTION LIMITS, UNLESS OTHERWISE NOTED. EXISTING SIGNAGE SHALL BE INSTALLED WITH ADEQUATE HORIZONTAL AND VERTICAL CLEARANCE PER NMDOT STD. DWG 701-02-2/3.

CONSTRUCTION NOTES

1. CONSTRUCT 5" A.C. MIN OVER 8" A.B.C. (HEAVY DUTY) PER SPECIFICATIONS AND GEOTECHNICAL REPORT PREPARED BY GEOMAT INC. DATED JULY 27, 2023. SEE HEAVY DUTY SECTION PER DETAIL "i" ON DETAIL SHEET C800.
2. CONSTRUCT CONCRETE SIDEWALK OVER 4" ABC PER NMDOT STD. DETAIL 609-01-1/1.
3. CONSTRUCT TYPE "B" CURB AND GUTTER OVER 4" ABC PER NMDOT STD. DETAIL 609-01-1/1.
4. CONSTRUCT CURB TERMINATION PER DETAIL "J" ON DETAIL SHEET C800.
5. CONSTRUCT SINGLE VERTICAL CURB PER DETAIL "F" ON DETAIL SHEET C800.
6. CONSTRUCT ASPHALT PAVEMENT EDGE PER DETAIL "H" ON DETAIL SHEET C800.
7. CONSTRUCT VERTICAL CURB AND GUTTER PER DETAIL "G" ON DETAIL SHEET C800.
8. INSTALL 12" SOLID WHITE LINE.
9. INSTALL REGULATORY SIGN R1-1, 30"X30" (STOP SIGN) PER NMDOT STD. DETAIL 701-02.
10. CONSTRUCT CATCH BASIN PER NM AWPA STD. DETAILS, "2205", "2207, "2215", "2216", AND "2220" ON DETAIL SHEET C802.
11. INSTALL 24" DIA. H.D.P.E. N-12 PIPE WITH WATERTIGHT JOINTS.
12. INSTALL 24" DIA. H.D.P.E. END SECTION AND RIPRAP PER DETAIL "F" ON DETAIL SHEET C801.

DEMOLITION NOTES

1. SAW CUT EXISTING ASPHALT PAVEMENT WITH CLEAN VERTICAL CUT.
2. REMOVE AND DISPOSE OF EXISTING CONCRETE SIDEWALK TO THE NEAREST JOINT AT LIMITS SHOWN ON PLAN.
3. REMOVE AND DISPOSE OF EXISTING CURB AND ANY GUTTER TO THE NEAREST JOINT AT LIMITS SHOWN ON PLAN.
4. REMOVE AND DISPOSE OF EXISTING ASPHALT PAVEMENT.
5. SAW CUT EXISTING SIDEWALK WITH CLEAN VERTICAL CUT.
6. SAW CUT EXISTING CURB AND ANY GUTTER WITH CLEAN VERTICAL CUT.

REFERENCE NOTES

1. SITE LIGHTING
   REFER TO ELECTRICAL PLAN

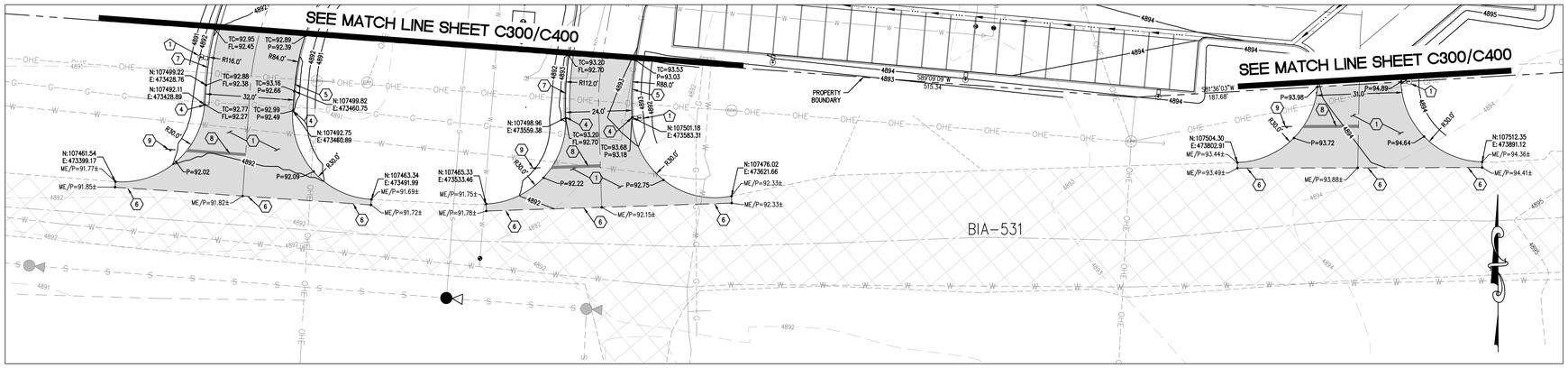

IMPROVEMENT PLAN - SOUTH DRIVEWAY ENTRANCES

0 10 20 40 FEET
1" = 20'

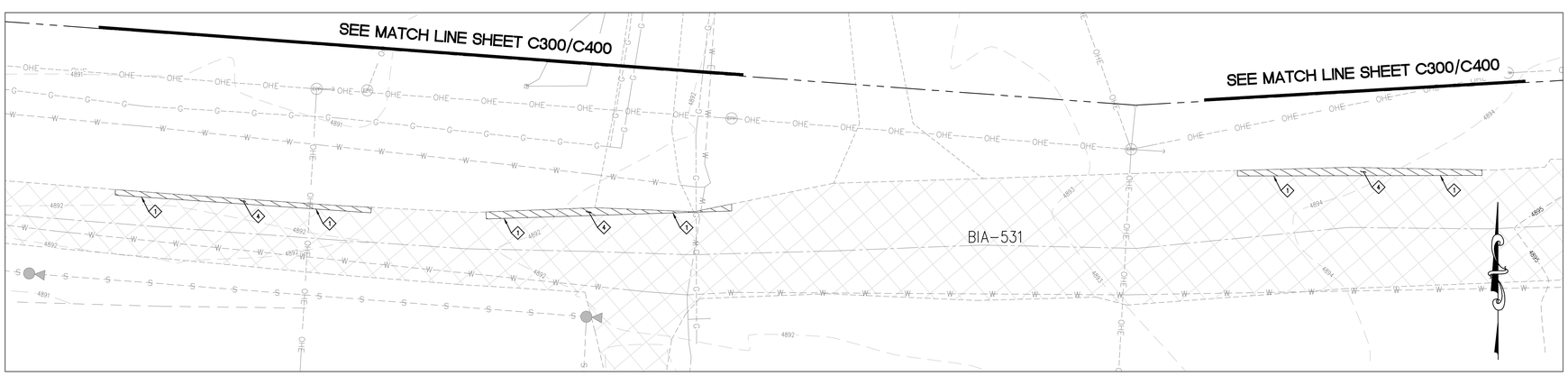

DEMOLITION ITEMS - SOUTH DRIVEWAY ENTRANCES

0 10 20 40 FEET
1" = 20'

PAVING HATCH LEGEND

- ASPHALT PAVEMENT AREAS (HEAVY DUTY)
- CONCRETE AREAS
- EXISTING ASPHALT (TO REMAIN)
- REMOVAL LIMITS

LEGEND

- BOUNDARY LINE
- PROPOSED WATER LINE
- PROPOSED SEWER LINE
- PROPOSED GAS LINE
- PROPOSED FENCE
- EXISTING WATER LINE
- EXISTING SEWER LINE
- EXISTING FENCE
- EXISTING OVERHEAD ELECTRIC
- EXISTING UNDERGROUND ELECTRIC
- EXISTING UNDERGROUND GAS LINE
- EXISTING COMMUNICATIONS LINE
- PROPOSED REDUCER
- PROPOSED GATE VALVE
- EXISTING GATE VALVE
- WATER METER
- C.S. CURB STOP
- D.S. DOMESTIC STOP
- C.O. CLEANOUT
- PROPOSED SEWER MANHOLE
- EXISTING SEWER MANHOLE
- FIRE HYDRANT

GRADING DESCRIPTIONS LEGEND

FFE . . . . . FINISH FLOOR ELEV.
P . . . . . ASPHALT PAVEMENT ELEV.
C . . . . . CONCRETE PAVEMENT ELEV.
TC . . . . . TOP OF CURB ELEV.
FG . . . . . FINISH GRADE ELEV.
FL . . . . . FLOWLINE ELEV.
CL . . . . . CENTER LINE
ME . . . . . MATCH EXISTING ELEV.
RIM . . . . . RIM ELEV.

KNOW WHAT'S BELOW - CALL BEFORE YOU DIG.
1-800-528-5011

nm811 Know what's below. Call before you dig.

HOZHO ENGINEERING, LLC
2733 E. Lakin Dr.
Suite 2
Flagstaff, AZ 86004
ph: (928) 779-0420
www.hozho-eng.com

STAMP

ALTON L. WILLIAMS NEW MEXICO 22081 PROFESSIONAL ENGINEER 11/03/23

DYRON MURPHY ARCHITECTS, P.C.
4505 Montbel Place NE, Albuquerque, New Mexico 87107

SHIPROCK PINNACLE HOTEL & RESTAURANT

SHIPROCK, NEW MEXICO

100% CONSTRUCTION DOCUMENTS

ISSUED FOR CONSTRUCTION

NOVEMBER 3, 2023

PROJECT NUMBER	DRAWN BY	PROJ MGR
23009	HOZHO	AW

OFFSITE IMPROVEMENT PLAN

Sheet Title

Sheet Number C600 of

N:\Projects\2023\23009 Shiprock Pinnacle Hotel\DWG\23009CAD\C-00.dwg
11/03/2023 11:10:11 PM
DYRON MURPHY ARCHITECTS P.C.

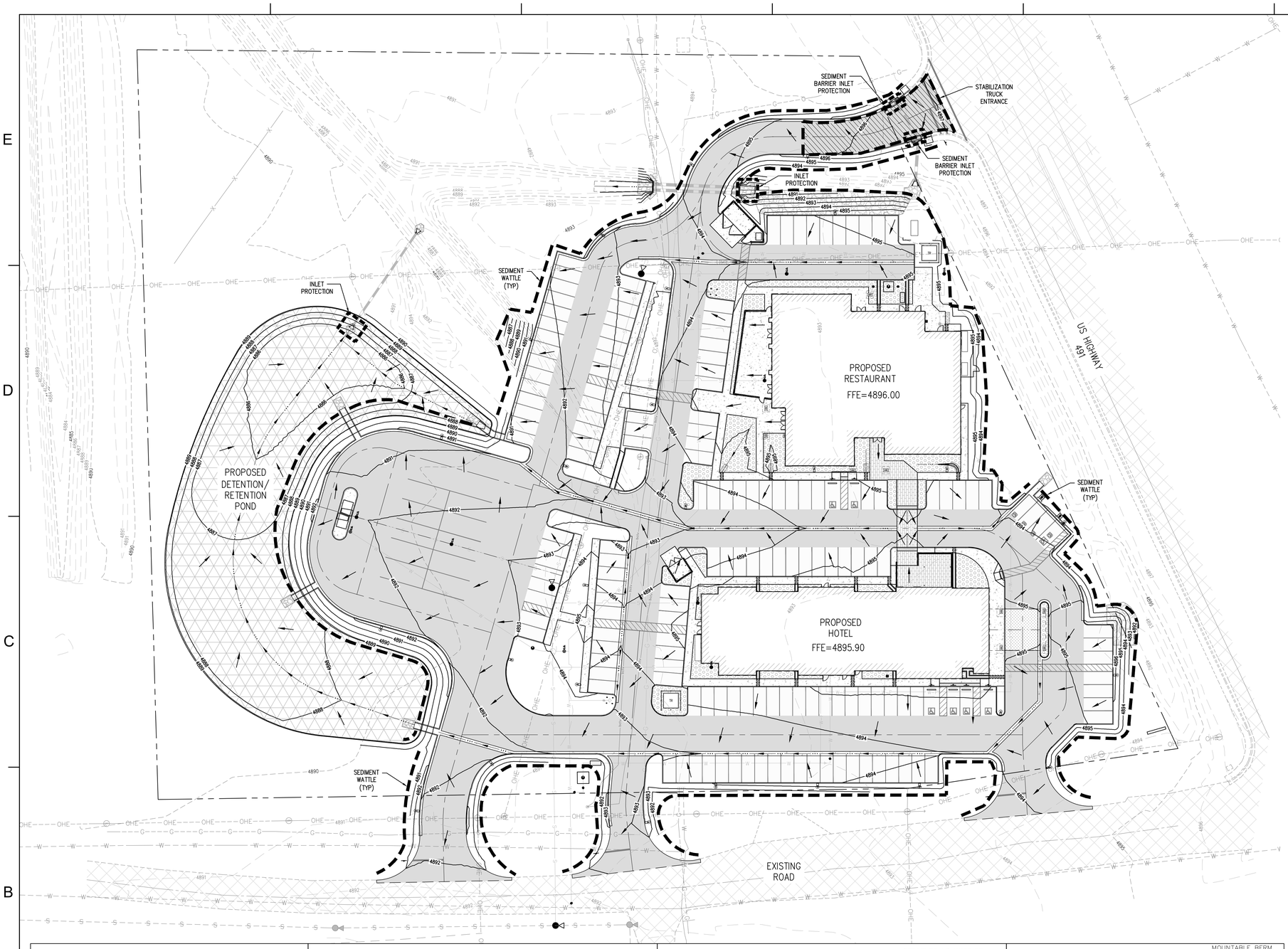

GENERAL EROSION CONTROL NOTES:

1. THE CONTRACTOR SHALL DESIGNATE RESPONSIBLE PARTY WHO WILL ACT AS THE OPERATOR AND BE RESPONSIBLE FOR THE IMPLEMENTATION OF THE EROSION CONTROL MEASURES.
2. THE OPERATOR SHALL IDENTIFY AND MAINTAIN BEST MANAGEMENT PRACTICES (BMP) TO ELIMINATE THE POTENTIAL FOR DISCHARGES OF POLLUTANTS INTO STORM WATER EXITING THE SITE. INCLUDING THE DESIGNATION OF APPROPRIATE LOCATIONS/CONTROL AREAS FOR:
   - 2.1. EQUIPMENT MAINTENANCE AND REPAIR
   - 2.2. RECEPTACLES FOR COLLECTION OF WASTE
   - 2.3. EQUIPMENT WASH DOWN
   - 2.4. CHEMICALS, PAINTS, SOLVENTS, FERTILIZERS AND OTHER POTENTIALLY TOXIC MATERIALS
   - 2.5. SANITARY FACILITIES
3. THE OPERATOR SHALL AFFECT THE USE OF ANY AND ALL METHODS TO ELIMINATE THE POTENTIAL FOR OFFSITE DISCHARGE OF ANY OF THE ABOVE POLLUTANTS INCLUDING THE DISCHARGE OF SILT, DUST OR SEDIMENT THAT IS CONSIDERED A POLLUTANT. IT IS THE OPERATOR'S RESPONSIBILITY TO CONSTRUCT STRUCTURAL IMPROVEMENTS SHOWN ON THESE PLANS OR ANY FACILITIES NECESSARY TO PREVENT THE MIGRATION OF POLLUTANTS OFF SITE. THESE IMPROVEMENTS SHALL BE AT A MINIMUM OF AND NOT LIMITED TO THE FOLLOWING: EARTH DIKES, SILT AND STRAW BALE FENCES, TEMPORARY AND PERMANENT DRAINAGE SWALES, SEDIMENT TRAPS, CHECK DAMS, SUBSURFACE DRAINS, PIPE SLOPE DRAINS, TEMPORARY STORM DRAIN DIVERSIONS, STORM DRAIN INLET PROTECTION, ROCK OUTLET PROTECTION, SITE ENTRANCE STABILIZATION, TEMPORARY SEDIMENT BASINS, WIND BREAKS AND ANY OTHER FACILITIES NECESSARY.PROPOSED CULVERT INLETS MAY BE PRONE TO SILTATION. EXTRA CARE SHALL BE TAKEN DURING CONSTRUCTION AND THROUGHOUT THE LIFE OF THE DEVELOPMENT TO CONTROL EROSION FROM THE SITE. THE CULVERTS SHALL BE CLEANED OFTEN TO MAINTAIN THE CAPACITY NEEDED.
4. RIP RAP SHALL BE PLACED IMMEDIATELY UPON CONSTRUCTION OF CHANNELS/DITCHES. TEMPORARY BEST MANAGEMENT PRACTICES (BMPS) SHALL BE USED WHEN CONSTRUCTION HAS TEMPORARILY STOPPED.
5. SITE SHALL HAVE PERMANENT EROSION CONTROL MEASURE IN PLACE AS SOON AS THE PARTICULAR ITEM OF CONSTRUCTION IS COMPLETED. PERMANENT EROSION CONTROL FOR THIS SITE SHALL BE EROSION CONTROL RIPRAP WITHIN THE PROPOSED DRAINAGE DITCHES.
6. TO MINIMIZE MUD TRACKING ON EXISTING ROADWAYS, THE CONTRACTOR SHALL CONSTRUCT A STABILIZED CONSTRUCTION ENTRANCE PER DETAILS SHOWN ON THE PLAN.
7. ALL DEVICES SHOWN ON THIS PLAN SHALL BE IN PLACE AT THE END OF EACH WORKING DAY OR ON WEEKENDS WHEN THE 5 DAY RAIN POSSIBILITY FORECAST EXCEEDS 20%.
8. ALL SILT & DEBRIS SHALL BE REMOVED FROM ALL DEVICE WITHIN 24 HOURS AFTER EACH RAINSTORM OR NEXT WORKING DAY IF ON A WEEKEND.
9. ADDITIONAL BMPS MAY BE REQUIRED ONCE CONSTRUCTION IS NEARING COMPLETION AND POTENTIAL EROSION PATTERNS BECOME MORE APPARENT. IT IS THE RESPONSIBILITY OF THE OPERATOR TO INSTALL ANY ADDITIONAL DEVICES TO REDUCE EROSION DAMAGE WITHIN THE SITE AND COMPLY WITH THE CONSTRUCTION GENERAL PERMIT AND SWPPP.
10. ALL DEVICES SHOULD BE PROPERLY MAINTAINED, INSPECTED, AND REPLACED AS REQUIRED AFTER EVERY STORM EVENT.
11. CONCRETE WASHOUTS SHALL USE ECO PANS OR APPROVED EQUAL BMP.
12. IF AN ALTERNATIVE VEHICLE/EQUIPMENT AND CONCRETE WASHOUT LOCATION IS TO BE UTILIZED, APPROPRIATE BMPS SHALL BE IMPLEMENTED.
13. CONTRACTOR SHALL BE RESPONSIBLE FOR PREPARING SWPPP IF REQUIRED.

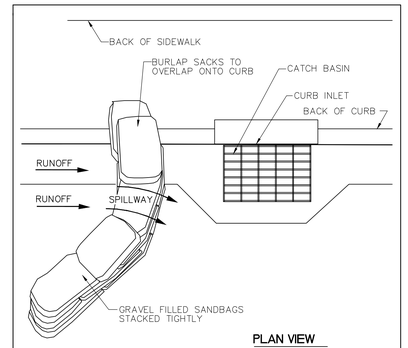

PLAN VIEW

NOTES:
1. PLACE CURB TYPE SEDIMENT BARRIERS ON GENTLY SLOPING STREET SEGMENTS, WHERE WATER CAN POND AND ALLOW SEDIMENT TO SEPARATE FROM RUNOFF.
2. SANDBAGS OF EITHER BURLAP OR WOVEN "GEOTEXTILE" FABRIC, ARE FILLED WITH GRAVEL, LAYERED AND PACKED TIGHTLY.
3. LEAVE A ONE SANDBAG GAP IN THE TOP ROW TO PROVIDE A SPILLWAY FOR OVERFLOW.
4. INSPECT BARRIERS AND REMOVE SEDIMENT AFTER EACH STORM EVENT. SEDIMENT AND GRAVEL MUST BE REMOVED FROM THE TRAVELED WAY IMMEDIATELY.

CURB INLET/ CATCH BASIN SEDIMENT BARRIER

0 15 30 60 FEET
1" = 30'

LEGEND

- SEDIMENT WATTLE
- FLOW DIRECTION
- STABILIZATION TRUCK ENTRANCE
- INLET PROTECTION/SEDIMENT BARRIER

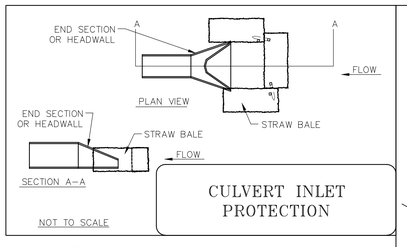

NOT TO SCALE

CULVERT INLET PROTECTION

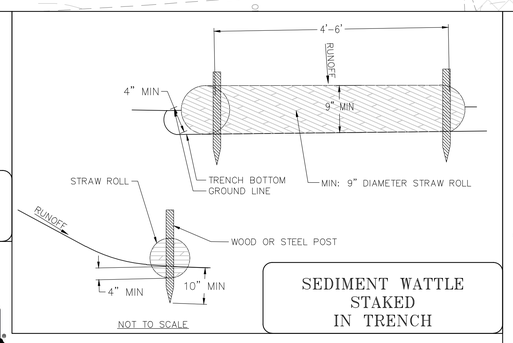

NOT TO SCALE

SEDIMENT WATTLE STAKED IN TRENCH

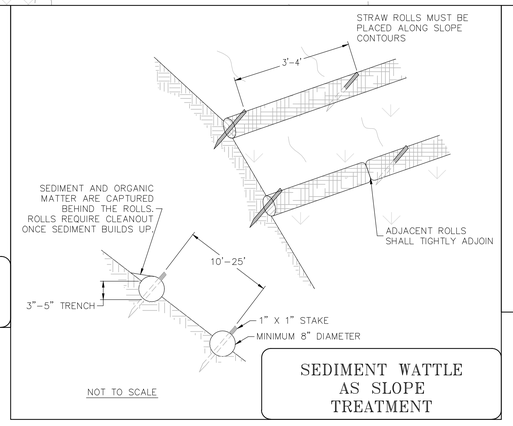

NOT TO SCALE

SEDIMENT WATTLE AS SLOPE TREATMENT

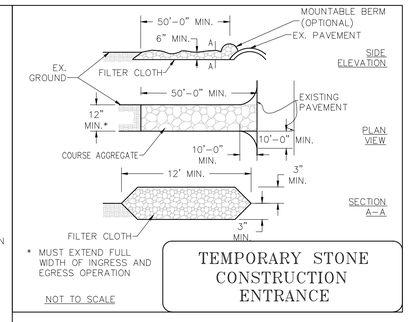

NOT TO SCALE

TEMPORARY STONE CONSTRUCTION ENTRANCE

KNOW WHAT'S BELOW-CALL. BEFORE YOU DIG. 1-800-528-5011

nm811 Know what's below. Call before you dig.

HOZHO ENGINEERING, LLC
2733 E. Lakin Dr.
Suite 2
Flagstaff, AZ 86004
ph: (928) 779-0420
www.hozho-eng.com

STAMP

ALLEN L. WILLIAMS NEW MEXICO 23081 PROFESSIONAL ENGINEER 11/03/23

DYRON MURPHY ARCHITECTS, P.C.
4505 Montbel Place NE, Albuquerque, New Mexico 87107

SHIPROCK PINNACLE HOTEL & RESTAURANT

SHIPROCK, NEW MEXICO

100% CONSTRUCTION DOCUMENTS

ISSUED FOR CONSTRUCTION

NOVEMBER 3, 2023

PROJECT NUMBER	DRAWN BY	PROJ MGR
23009	HOZHO	AW

EROSION CONTROL PLAN

Sheet Title

Sheet Number of

C700

N:\Projects\2023\23009 Shiprock Pinnacle Hotel\PROD\23009-CTV-EC.dwg
10/02/2023 3:27:15 PM
DYRON MURPHY ARCHITECTS, P.C.

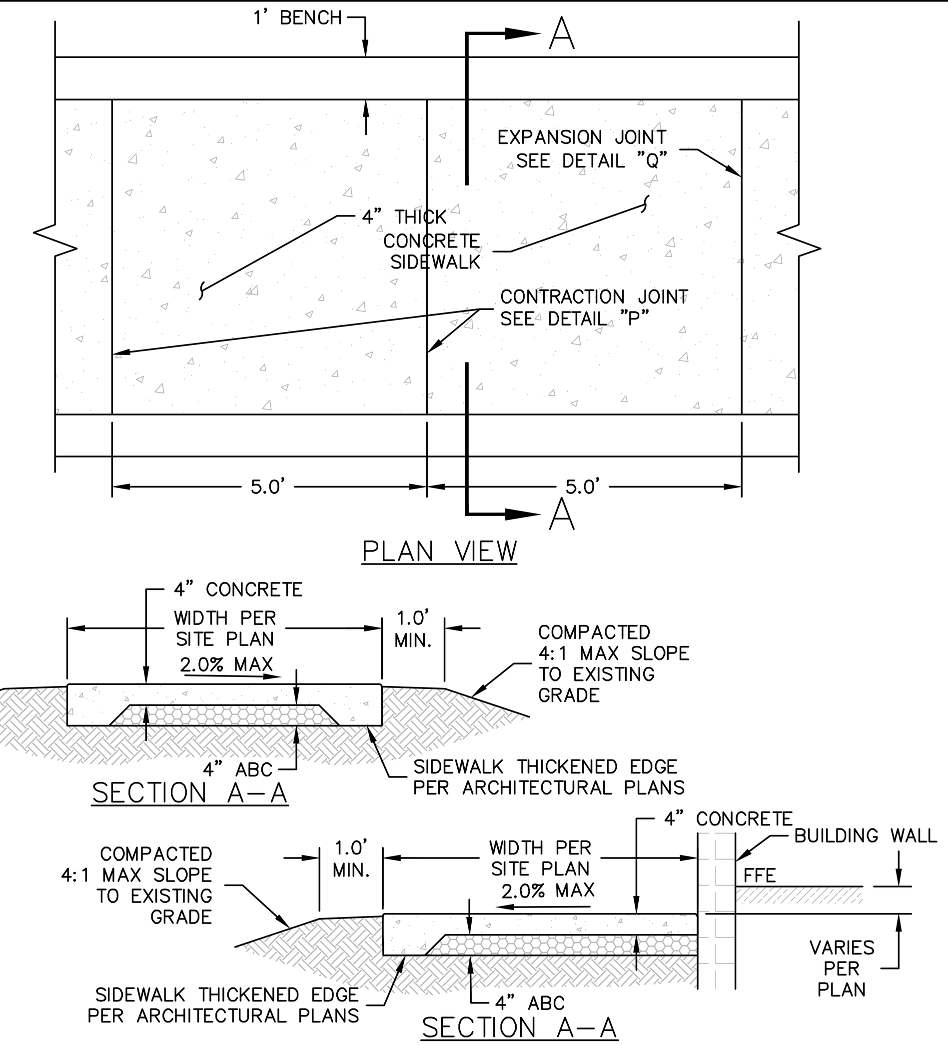

NOTES:
1. SIDEWALK CONSTRUCTION SHALL CONFORM TO SPECIFICATIONS.
2. EXPANSION JOINTS SHALL BE 1/2" BITUMINOUS TYPE PREFORMED. EXPANSION JOINT FILLER, A.S.T.M. D-1751.
3. LARGE AGGREGATE, IN CONTRACTION JOINT SHALL BE SEPARATED TO A DEPTH OF 1", FINISH DEPTH SHALL BE A MINIMUM OF 3/4".
4. EXPANSION JOINTS SHALL CONFORM TO SPECIFICATIONS. TO BE INSTALLED PRIOR TO CONCRETE PLACEMENT, AND AT A MAXIMUM SPACING OF 50'. THE EXPANSION JOINT MUST PROVIDE COMPLETE SEPARATION OF THE SIDEWALK FROM ADJOINING CONCRETE.
5. CONCRETE SHALL BE A MINIMUM OF 4000 PSI OR AS SPECIFIED IN THE SPECIFICATIONS.
6. SUBGRADE PREPARATION PER GEOTECHNICAL REPORT RECOMMENDATIONS.
7. CONTRACTOR SHALL PROVIDE A CONCRETE MIX DESIGN SUBMITTAL FOR APPROVAL.

DETAIL A
SIDEWALK DETAIL
NTS

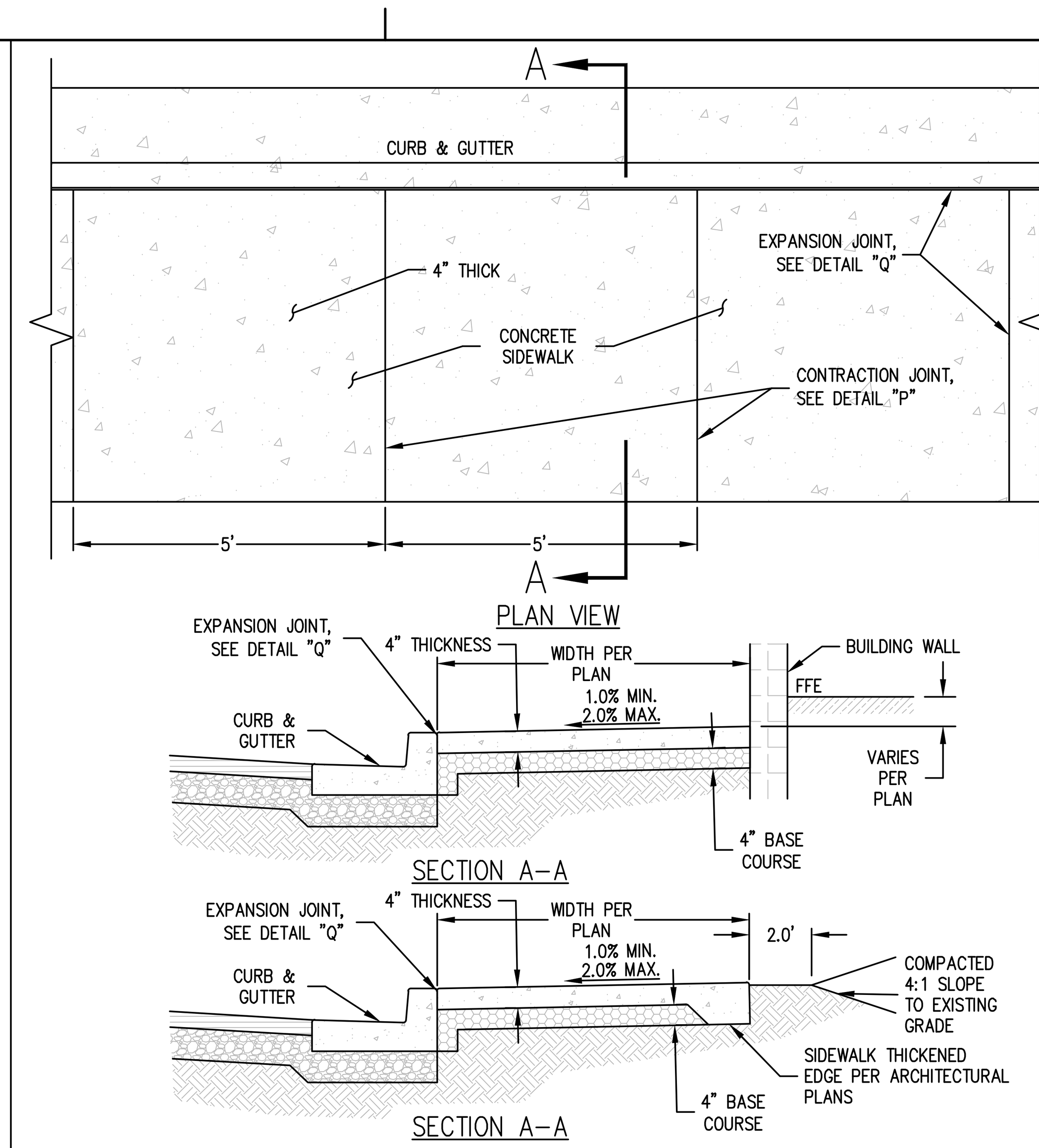

NOTES:
1. SIDEWALK CONSTRUCTION SHALL CONFORM TO SPECIFICATIONS.
2. EXPANSION JOINTS SHALL BE 1/2" BITUMINOUS TYPE PREFORMED EXPANSION JOINT FILLER, A.S.T.M. D-1751.
3. LARGE AGGREGATE, IN CONTRACTION JOINT, SHALL BE SEPARATED TO A DEPTH OF 1", FINISH DEPTH SHALL BE A MINIMUM OF 3/4".
4. EXPANSION JOINT 50' MAXIMUM SPACING PER SPECIFICATIONS.
5. 4,000 PSI CONCRETE CONSTRUCTION AS PER SPECIFICATIONS.

DETAIL B
SIDEWALK ALONG CURBING
NTS

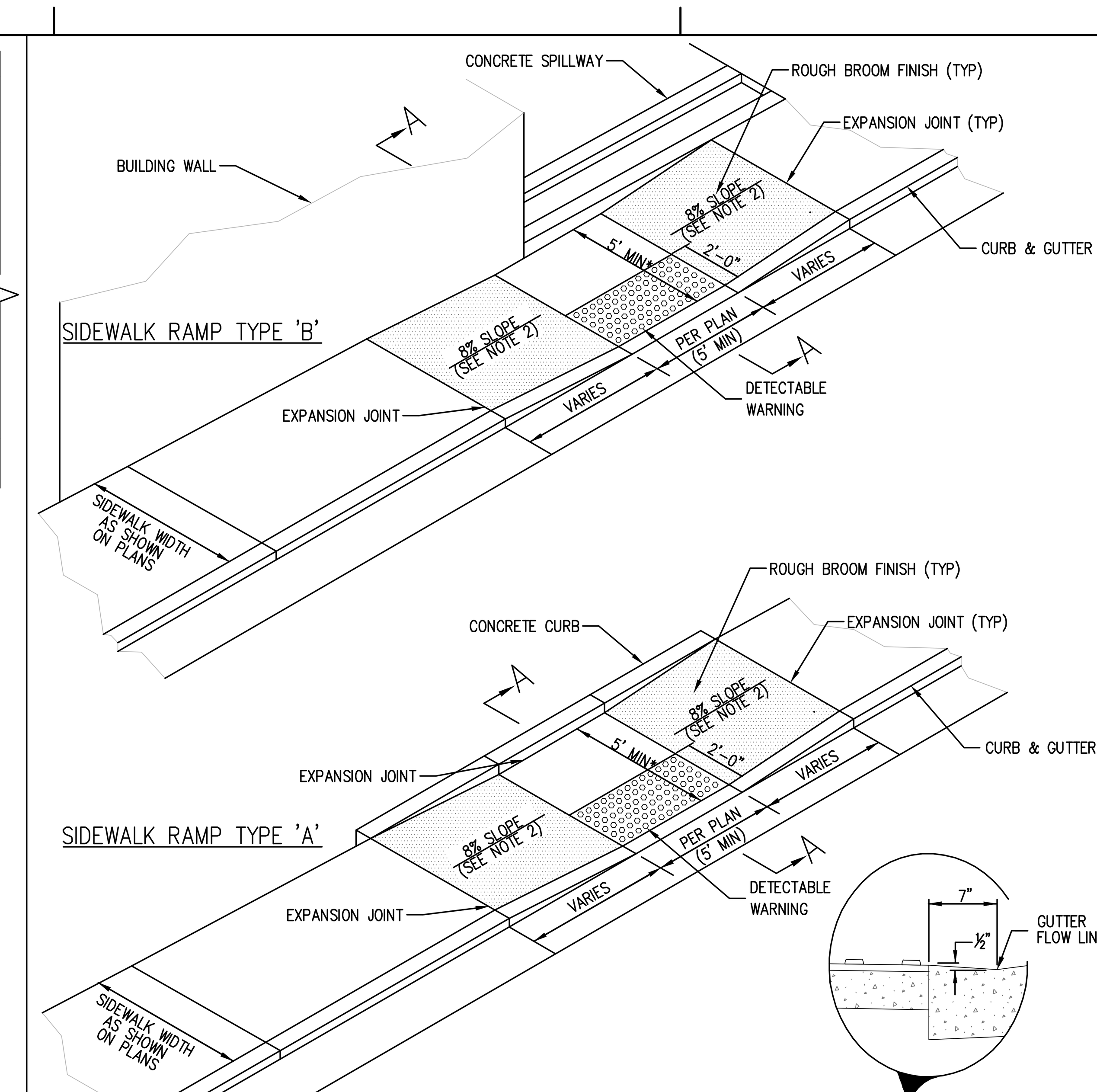

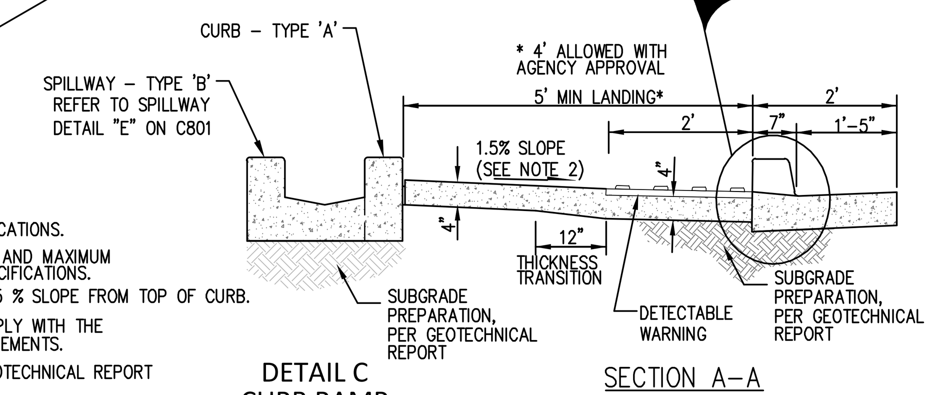

NOTES:
1. 4,000 PSI CONCRETE PER SPECIFICATIONS.
2. CONSTRUCTION INCLUDING JOINTS AND MAXIMUM SLOPES SHALL CONFORM TO SPECIFICATIONS.
3. SIDEWALK SURFACE TO MATCH 1.5 % SLOPE FROM TOP OF CURB.
4. DETECTABLE WARNING IS TO COMPLY WITH THE JURISDICTIONAL AGENCY'S REQUIREMENTS.
5. SUBGRADE PREPARATION PER GEOTECHNICAL REPORT AND PROJECT SPECIFICATIONS.

DETAIL C
CURB RAMP
NTS

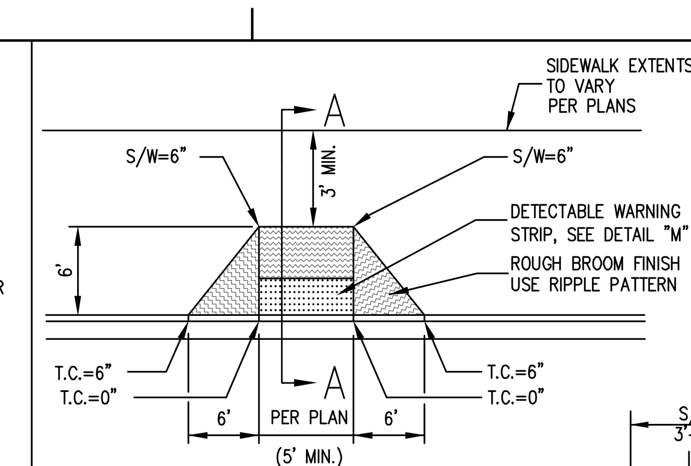

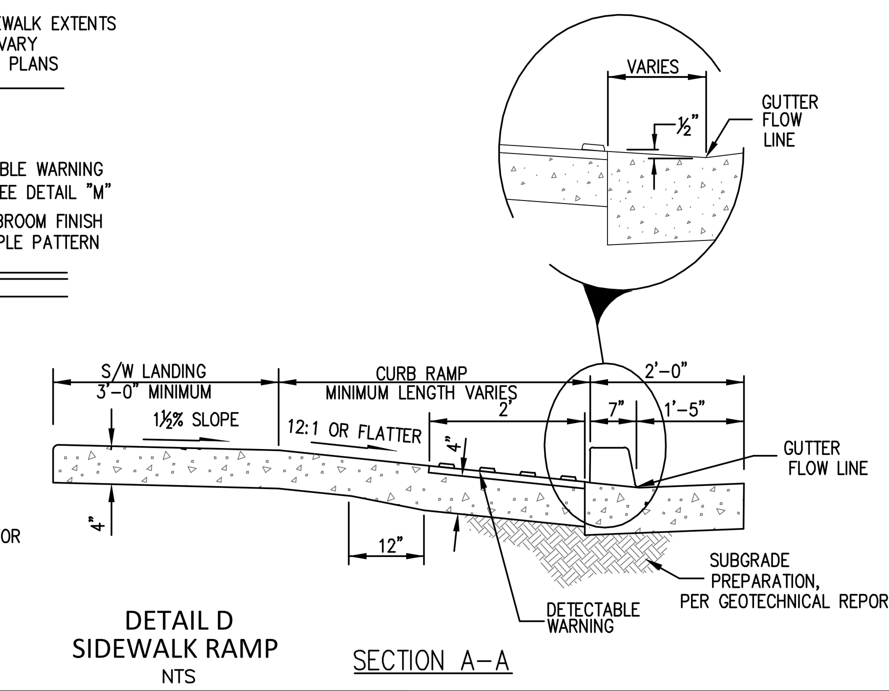

NOTES:
1. SEE GEOTECHNICAL REPORT AND PROJECT SPECIFICATIONS FOR SUBGRADE PREPARATION, COMPACTION AND EARTHWORK RECOMMENDATIONS.
2. 4,000 PSI CONCRETE PER SPECIFICATIONS.

DETAIL D
SIDEWALK RAMP
NTS

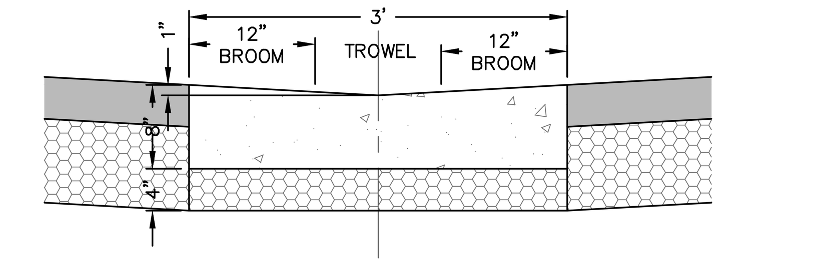

NOTES:
1. CONCRETE SHALL BE 4000 PSI AND SHALL CONFORM TO SPECIFICATIONS.
2. EITHER CONSTRUCTION JOINT OR CONTRACTION JOINT IS REQUIRED AT CENTERLINE OF STREET.
3. A SEPARATE CONCRETE PAD IS REQUIRED AT ALL EXPANSION JOINTS AND ALL CONSTRUCTION JOINTS.
4. EXPANSION JOINTS SHALL CONFORM TO SPECIFICATIONS.

DETAIL E
3' WIDE CONCRETE VALLEY GUTTER
NTS

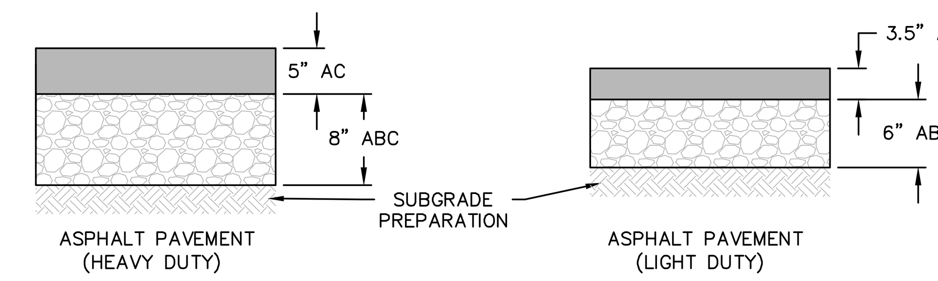

NOTES:
1. PAVING ASPHALT SHALL BE PER SPECIFICATIONS AND GEOTECHNICAL ENGINEERING REPORT PREPARED BY GEOMAT INC., JOB NO. 232-4403, DATED JULY 27, 2023.
2. CONCRETE SHALL BE PER SPECIFICATIONS AND GEOTECHNICAL ENGINEERING REPORT PREPARED BY GEOMAT INC., JOB NO. 232-4403, DATED JULY 27, 2023.
3. AGGREGATE BASE COURSE PER SPECIFICATIONS AND GEOTECHNICAL ENGINEERING REPORT PREPARED BY GEOMAT INC., JOB NO. 232-4403, DATED JULY 27, 2023.
4. SUBGRADE PREPARATION PER SPECIFICATIONS AND GEOTECHNICAL ENGINEERING REPORT PREPARED BY GEOMAT INC., JOB NO. 232-4403, DATED JULY 27, 2023.

DETAIL I
PAVEMENT SECTIONS
NTS

NOTES:
1. ALL VERTICAL SURFACES TO BE FORMED.
2. VERTICAL SURFACES DOWN FROM 2" BELOW UNDISTURBED SOIL MAY BE PLACED AGAINST NEAT CUT IF APPROVED BY THE ENGINEER AND CONCRETE WILL NOT EXTEND MORE THAN 1" BEYOND THEORETICAL FACE.
3. ALL EXPOSED SURFACES TO BE STRIPPED GREEN AND TROWEL FINISHED.
4. CONCRETE CURBS CONFORM THE SPECIFICATIONS.
5. MAXIMUM SPACING OF CONTRACTION JOINTS IS 10'.
6. CONCRETE TO BE 4000 PSI PER SPECIFICATIONS.

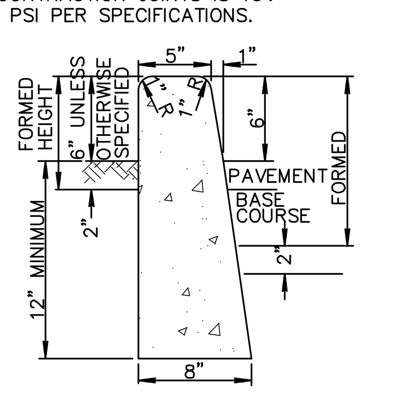

DETAIL F
SINGLE CURB
NTS

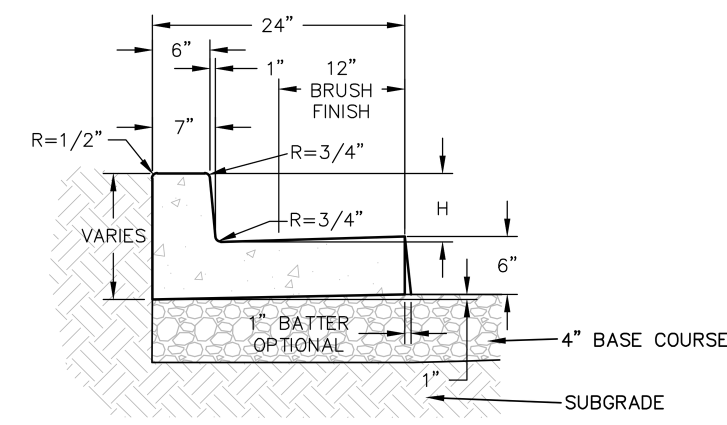

NOTES:
1. ALL EXPOSED SURFACES TO BE TROWEL FINISHED EXCEPT AS SHOWN. SEE SPECIFICATIONS.
2. H=6" OR AS SPECIFIED ON PLANS.
3. CONTRACTION JOINT SPACING 10' MAXIMUM.
4. EXPANSION JOINTS AS PER SPECIFICATIONS.
5. 4000 PSI CONCRETE PER SPECIFICATIONS.

DETAIL G
CURB & GUTTER
NTS

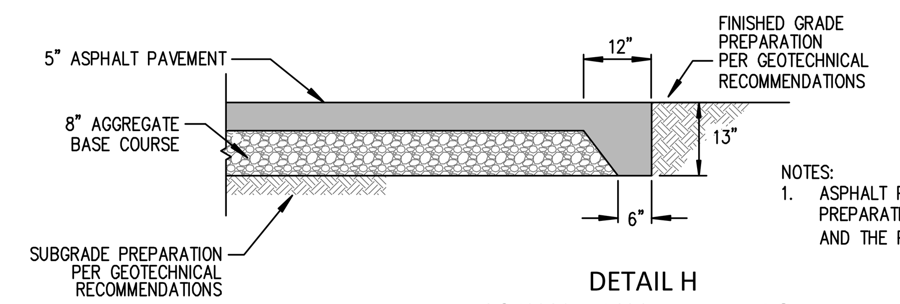

NOTES:
1. ASPHALT PAVEMENT, ABC, AND SUBGRADE PREPARATION SHALL BE PER SPECIFICATIONS AND THE PROJECT'S GEOTECHNICAL REPORT.

DETAIL H
ASPHALT PAVEMENT EDGE
NTS

NOTES:
1. ALL VERTICAL SURFACES TO BE FORMED.
2. VERTICAL SURFACES DOWN FROM 2" BELOW UNDISTURBED SOIL MAY BE PLACED AGAINST NEAT CUT IF APPROVED BY THE ENGINEER AND CONCRETE WILL NOT EXTEND MORE THAN 1" BEYOND THEORETICAL FACE.
3. ALL EXPOSED SURFACES TO BE STRIPPED GREEN AND TROWEL FINISHED.
4. CONCRETE CURBS CONFORM THE SPECIFICATIONS.
5. MAXIMUM SPACING OF CONTRACTION JOINTS IS 10'.
6. CONCRETE TO BE 4000 PSI PER SPECIFICATIONS.

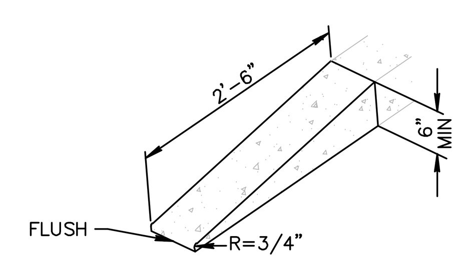

DETAIL J
CURB TERMINATION
NTS

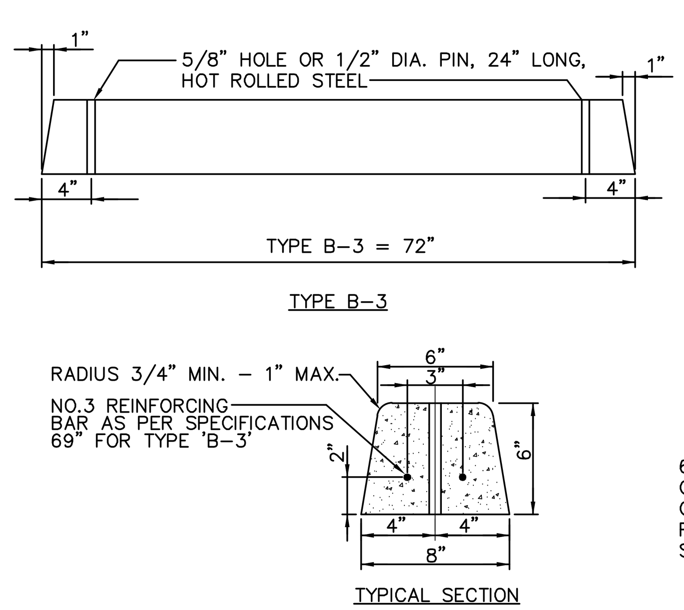

NOTES:
1. DIMENSIONAL AND REINFORCEMENT CHANGES WILL BE PERMITTED UPON PRIOR WRITTEN APPROVAL OF THE ENGINEER.
2. UNLESS OTHERWISE NOTED, CONCRETE SHALL BE 4,000 PSI AND PER SPECIFICATIONS.

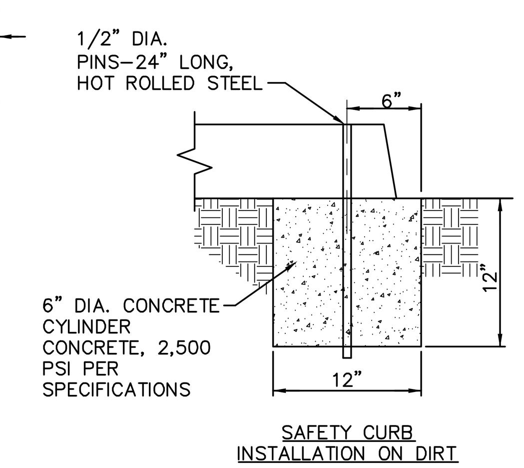

DETAIL L
PRECAST SAFETY CURB
NTS

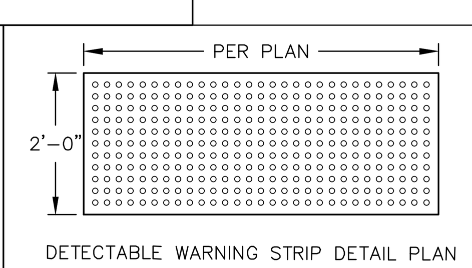

DOME ALIGNMENT:
DETECTABLE WARNING SURFACES SHALL EXTEND 24" MIN IN BOTH DIRECTION OF TRAVEL AND FULL WIDTH OF THE CURB RAMP, LANDING OR TRANSITION. DOMES SHALL BE ALIGNED ON A SQUARE GRID IN THE PREDOMINANT DIRECTION OF THE CROSSWALK TO PERMIT WHEELS TO ROLL BETWEEN DOMES.

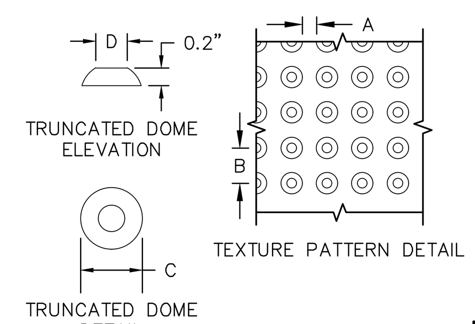

LEGEND
A – 11/16" MINIMUM (TYP) (0.65" MINIMUM ADA ACTUAL)
B – 1 5/8" TO 2 3/8" (TYP) (1.6" TO 2.4" ADA ACTUAL)
C – 7/8" TO 1 3/8" (TYP) 0.9" TO 1.4" ADA ACTUAL)
D – 50% TO 65% OF 'C'

DETAIL M
DETECTABLE WARNING STRIP DETAIL
NTS

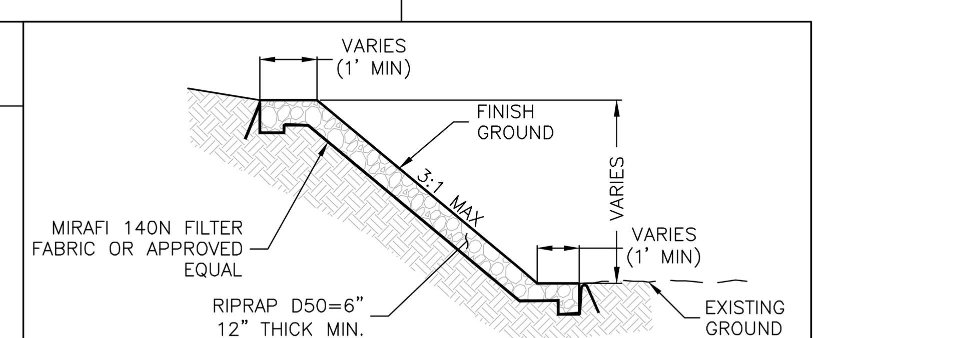

NOTES:
1. RIPRAP PER SPECIFICATIONS.
2. SUBGRADE PREPARATION PER GEOTECHNICAL RECOMMENDATIONS.

DETAIL S
RIPRAP SLOPE PROTECTION
NTS

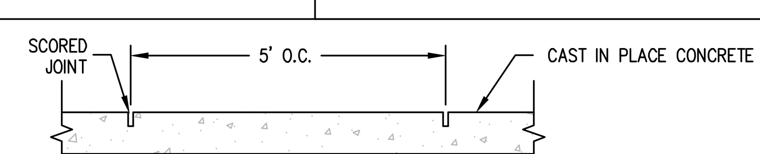

NOTES:
1. LARGE AGGREGATE, IN CONTRACTION JOINT, SHALL BE SEPARATED TO A DEPTH OF 1", FINISH DEPTH SHALL BE A MINIMUM OF 3/4".

DETAIL P
CONTRACTION JOINT
NTS

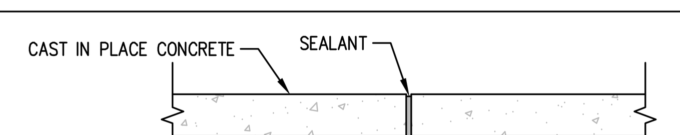

NOTES:
1. EXPANSION JOINTS SHALL BE 1/2" BITUMINOUS TYPE PREFORMED EXPANSION JOINT FILLER, A.S.T.M. D-1751.
2. EXPANSION JOINT 50' MAXIMUM SPACING PER SPECIFICATIONS.

DETAIL Q
EXPANSION JOINT
NTS

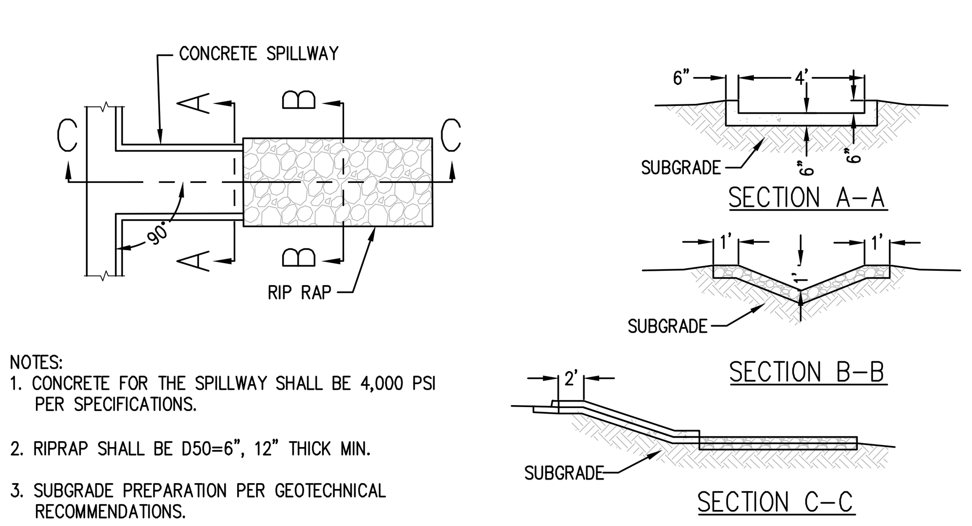

NOTES:
1. CONCRETE FOR THE SPILLWAY SHALL BE 4,000 PSI PER SPECIFICATIONS.
2. RIPRAP SHALL BE D50=6", 12" THICK MIN.
3. SUBGRADE PREPARATION PER GEOTECHNICAL RECOMMENDATIONS.

DETAIL N
SPILLWAY DETAIL
NTS

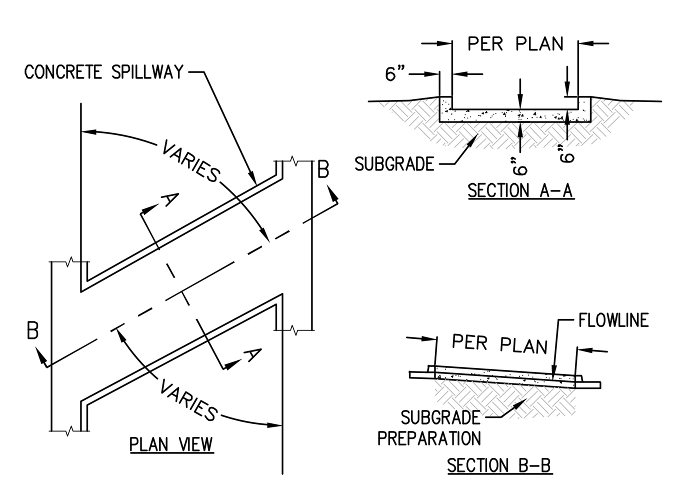

NOTES:
1. CONCRETE FOR THE SPILLWAY SHALL PER SPECIFICATIONS.
3. SUBGRADE PREPARATION PER GEOTECHNICAL RECOMMENDATIONS.

DETAIL O
SPILLWAY DETAIL
NTS

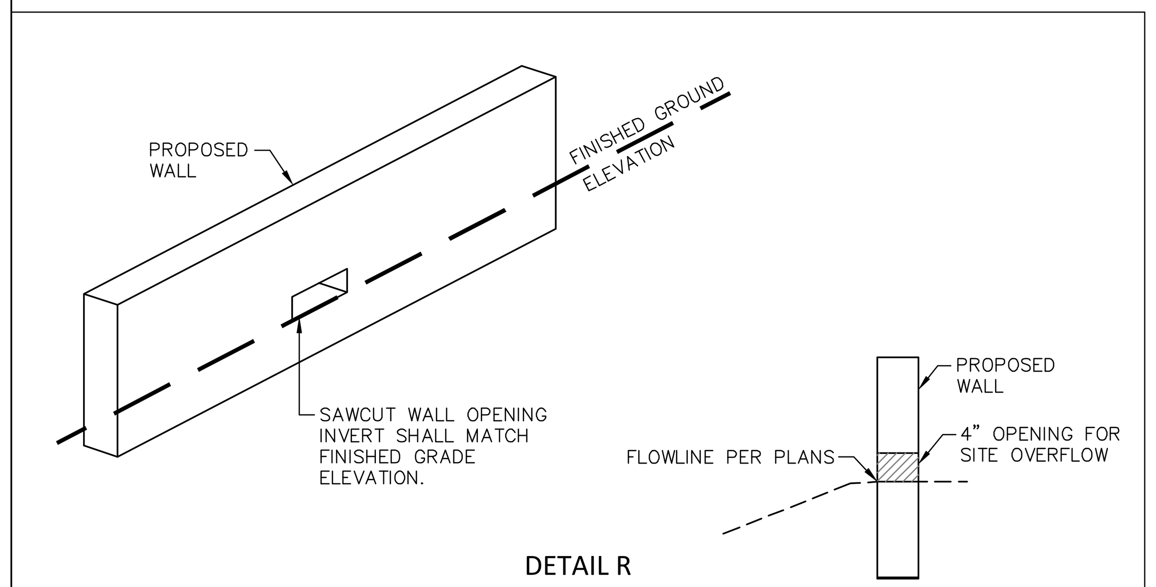

DETAIL R
WALL OPENING DETAIL
NTS

HOZHO ENGINEERING, LLC
2733 E. Lakin Dr.
Suite 2
Flagstaff, AZ 86004
ph: (928) 779-0420
www.hozho-eng.com

STAMP
ALTON L. WILLIAMS NEW MEXICO 22081 PROFESSIONAL ENGINEER 11/03/23

DYRON MURPHY ARCHITECTS, P.C.
4505 Montbel Place NE, Albuquerque, New Mexico 87107

SHIPROCK PINNACLE HOTEL & RESTAURANT
SHIPROCK, NEW MEXICO
100% CONSTRUCTION DOCUMENTS
ISSUED FOR CONSTRUCTION
NOVEMBER 3, 2023

PROJECT NUMBER	DRAWN BY	PROJ MGR
23009	HOZHO	AW

CIVIL DETAILS
Sheet Title
Sheet Number of
C800

10/25/2023 3:33:59 PM N:\Projects\2023\23009 Shiprock Pinnacle Hotel\DWG\23009-C8XX-DT.dwg DYRON MURPHY ARCHITECTS, P.C.

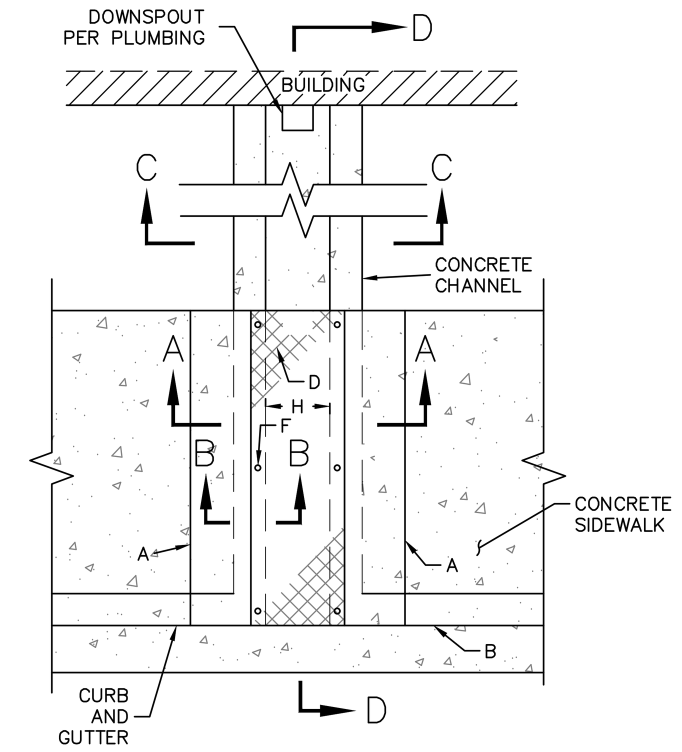

PLAN VIEW

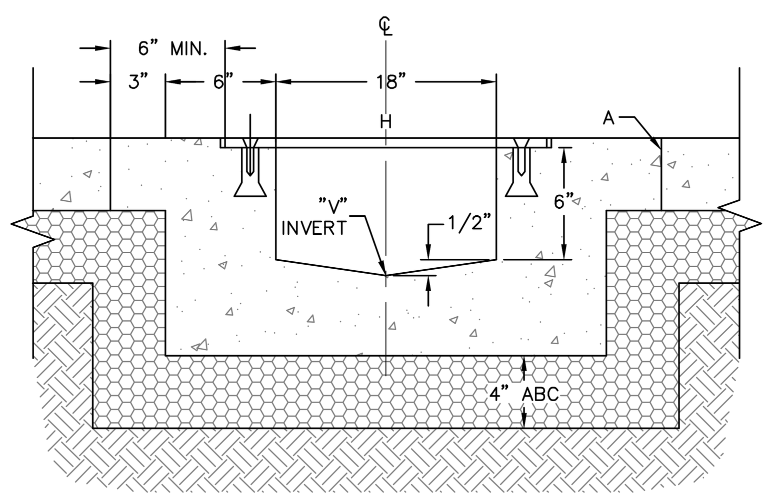

SECTION A–A

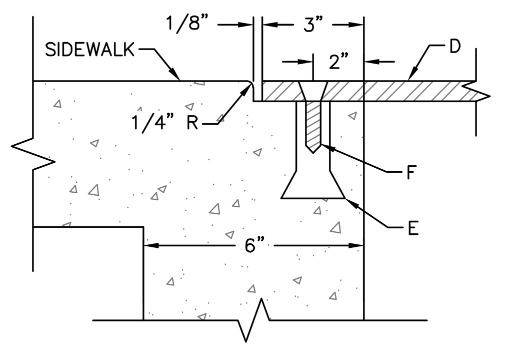

SECTION B–B

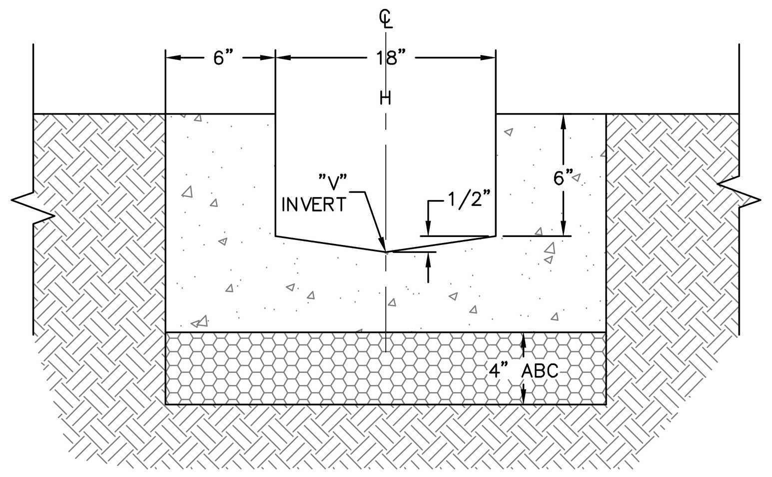

SECTION C–C

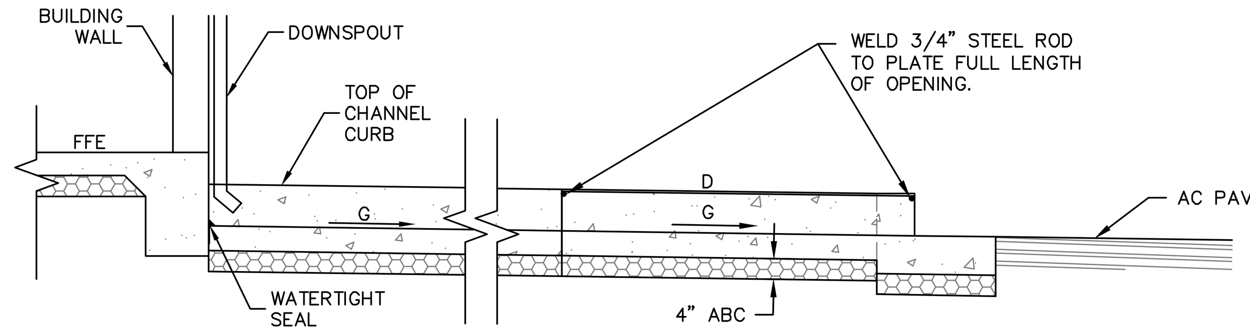

SECTION D–D

SIDEWALK CULVERT NOTES:

1. BOTTOM SLAB OF CULVERT SHALL BE POURED MONOLITHICALLY WITH NEW SIDEWALK.
2. THE INVERT SHALL BE TROWELED TO PRODUCE A HARD POLISHED SURFACE OF MAX. DENSITY AND SMOOTHNESS. INVERT SHALL BE V–SHAPED TO WITHIN 3" OF OUTLET. THEN WARPED TO PARALLEL FLOWLINE AT OUTLET, UNLESS OTHERWISE SHOWN.
3. LARGE AGGREGATE, IN CONTRACTION JOINT SHALL BE SEPARATED TO A DEPTH OF 1", FINISH DEPTH SHALL BE A MINIMUM OF 3/4".
4. ALL EXPOSED CONC. SURFACE SHALL MATCH GRADE, COLOR, FINISH, AND SCORING OF ADJACENT SIDEWALK.
5. IF ROD ANCHORS ARE USED, DRILL & TAP FOR F.H. MACHINE SCREW. ATTACH ANCHORS TO PLATE AND SECURE PLATE IN PLACE PRIOR TO POURING OF WALLS.
6. LENGTH OF EACH PLATE SHALL BE SUCH THAT THE WEIGHT WILL NOT EXCEED 300 LBS. AND SHALL BE STRESS RELIEVED AFTER FABRICATION. CLEAN SURFACE OF PLATE AND FRAMING MEMBERS AND PAINT W/ ONE SHOP COAT RED OXIDE AND TWO FINISH COATS ALUMINUM PAINT (AASHTO M69).

SIDEWALK CULVERT CONSTRUCTION NOTES:

A. MATCH NEAREST CONTROL JOINT, INSTALL 1/2" EXPANSION JOINT.
B. EDGE OF SIDEWALK OR SETBACK (VARIABLE).
C. NOT USED.
D. 3/8" CHECKERED STEEL PLATE (PAINT PER NOTE 6, ABOVE).
E. FOR SECURING PLATE USE 1" X 5" S.S. ROD ANCHOR, "RED HEAD MULTI–SET II SRM–38 ANCHOR" OR APPROVED EQUAL. INSTALL PER MANUFACTURER'S INSTRUCTIONS AT MAX. 24" O.C., A MINIMUM OF 2 PER SIDE AND ONE WITHIN 6" OF EACH END.
F. 3/8" – 16 X 1 1/4" COUNTERSUNK, F.H., STAINLESS STEEL, MACHINE SCREW.
G. SLOPE 1/4" PER FT. MIN.
H. DRAIN WIDTH PER PLAN (12" MIN., 24" MAX.).

DETAIL A
CHANNEL AND SIDEWALK CULVERT WITH STEEL PLATE TOP
NTS

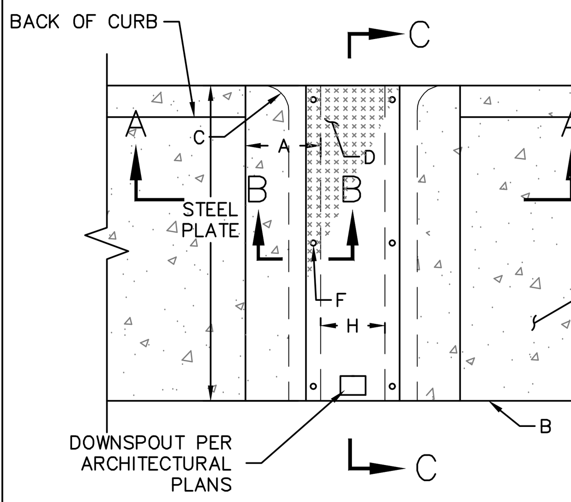

PLAN VIEW

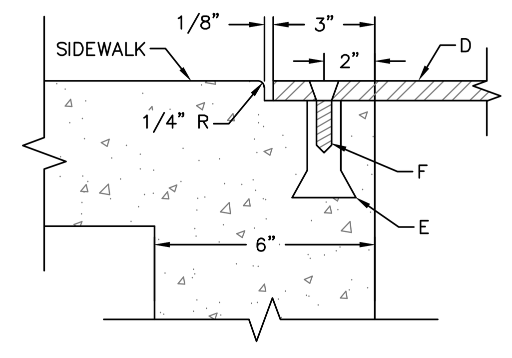

SECTION B–B

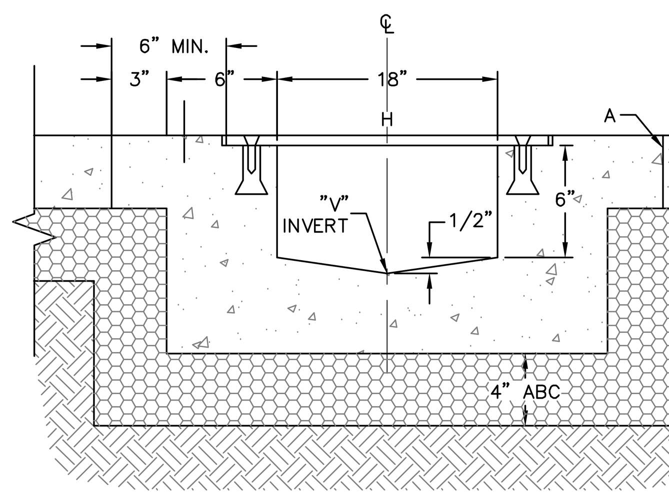

SECTION A–A

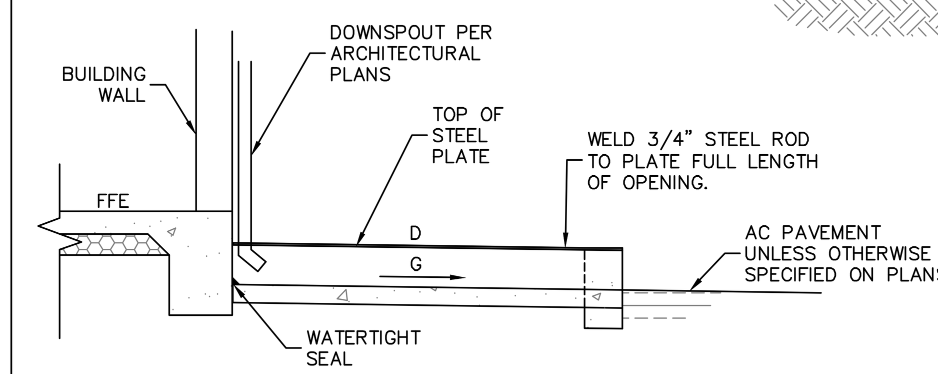

SECTION C–C

SIDEWALK CULVERT NOTES:

1. BOTTOM SLAB OF CULVERT SHALL BE POURED MONOLITHICALLY WITH NEW SIDEWALK.
2. THE INVERT SHALL BE TROWELED TO PRODUCE A HARD POLISHED SURFACE OF MAX. DENSITY AND SMOOTHNESS. INVERT SHALL BE V–SHAPED TO WITHIN 3" OF OUTLET. THEN WARPED TO PARALLEL FLOWLINE AT OUTLET, UNLESS OTHERWISE SHOWN.
3. LARGE AGGREGATE, IN CONTRACTION JOINT SHALL BE SEPARATED TO A DEPTH OF 1", FINISH DEPTH SHALL BE A MINIMUM OF 3/4".
4. ALL EXPOSED CONC. SURFACE SHALL MATCH GRADE, COLOR, FINISH, AND SCORING OF ADJACENT SIDEWALK.
5. IF ROD ANCHORS ARE USED, DRILL & TAP FOR F.H. MACHINE SCREW. ATTACH ANCHORS TO PLATE AND SECURE PLATE IN PLACE PRIOR TO POURING OF WALLS.
6. LENGTH OF EACH PLATE SHALL BE SUCH THAT THE WEIGHT WILL NOT EXCEED 300 LBS. AND SHALL BE STRESS RELIEVED AFTER FABRICATION. CLEAN SURFACE OF PLATE AND FRAMING MEMBERS AND PAINT W/ ONE SHOP COAT RED OXIDE AND TWO FINISH COATS ALUMINUM PAINT (AASHTO M69).

SIDEWALK CULVERT CONSTRUCTION NOTES:

A. MATCH NEAREST CONTROL JOINT, INSTALL 1/2" EXPANSION JOINT.
B. EDGE OF SIDEWALK OR SETBACK (VARIABLE).
C. 3" RADIUS (TYPICAL).
D. 3/8" CHECKERED STEEL PLATE (PAINT PER NOTE 6, ABOVE).
E. FOR SECURING PLATE USE 1" X 5" S.S. ROD ANCHOR, "RED HEAD MULTI–SET II SRM–38 ANCHOR" OR APPROVED EQUAL. INSTALL PER MANUFACTURER'S INSTRUCTIONS AT MAX. 24" O.C., A MINIMUM OF 2 PER SIDE AND ONE WITHIN 6" OF EACH END.
F. 3/8" – 16 X 1 1/4" COUNTERSUNK, F.H., STAINLESS STEEL, MACHINE SCREW.
G. SLOPE 1/4" PER FT. MIN.
H. DRAIN WIDTH PER PLAN (12" MIN, 24" MAX).

DETAIL B
SIDEWALK CULVERT WITH STEEL PLATE TOP
NTS

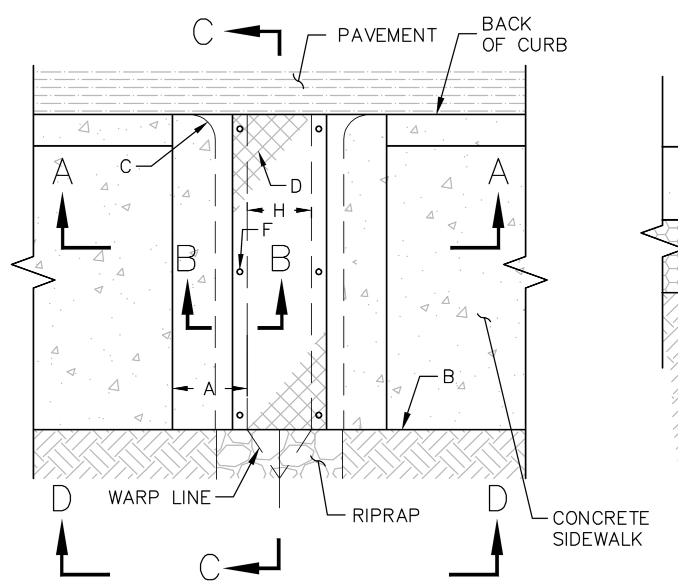

PLAN VIEW

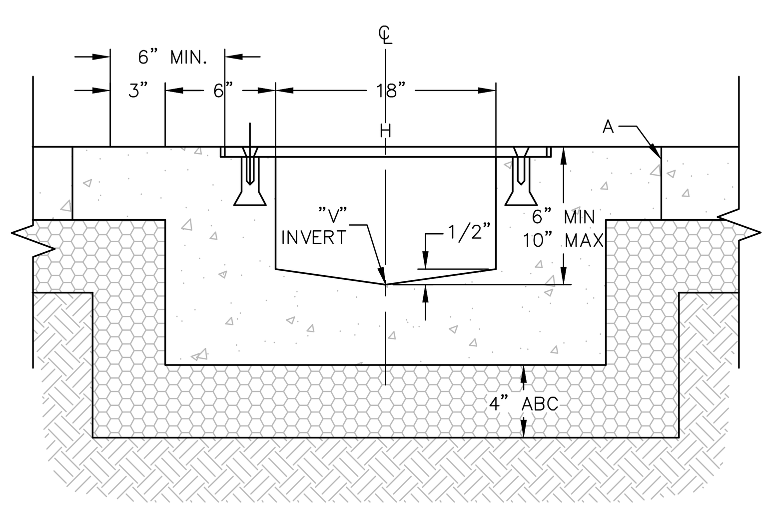

SECTION A–A

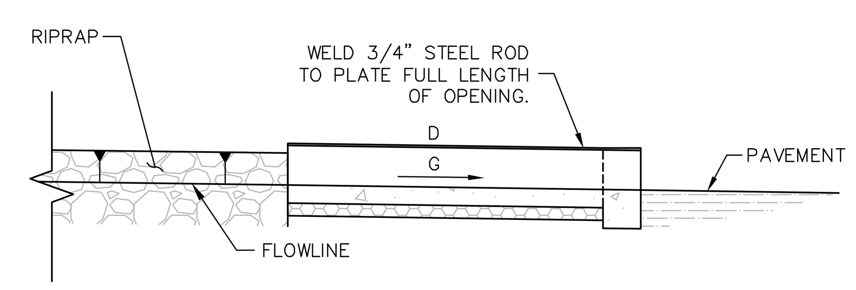

SECTION C–C

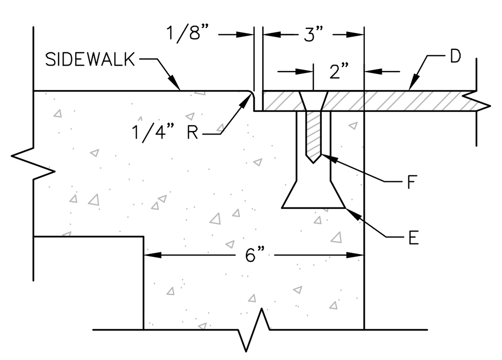

SECTION B–B

SIDEWALK CULVERT NOTES:

1. BOTTOM SLAB OF CULVERT SHALL BE POURED MONOLITHICALLY WITH NEW SIDEWALK.
2. THE INVERT SHALL BE TROWELED TO PRODUCE A HARD POLISHED SURFACE OF MAX. DENSITY AND SMOOTHNESS. INVERT SHALL BE V–SHAPED TO WITHIN 3" OF OUTLET. THEN WARPED TO PARALLEL FLOWLINE AT OUTLET, UNLESS OTHERWISE SHOWN.
3. LARGE AGGREGATE, IN CONTRACTION JOINT SHALL BE SEPARATED TO A DEPTH OF 1", FINISH DEPTH SHALL BE A MINIMUM OF 3/4".
4. ALL EXPOSED CONC. SURFACE SHALL MATCH GRADE, COLOR, FINISH, AND SCORING OF ADJACENT SIDEWALK.
5. IF ROD ANCHORS ARE USED, DRILL & TAP FOR F.H. MACHINE SCREW. ATTACH ANCHORS TO PLATE AND SECURE PLATE IN PLACE PRIOR TO POURING OF WALLS.
6. LENGTH OF EACH PLATE SHALL BE SUCH THAT THE WEIGHT WILL NOT EXCEED 300 LBS. AND SHALL BE STRESS RELIEVED AFTER FABRICATION. CLEAN SURFACE OF PLATE AND FRAMING MEMBERS AND PAINT W/ ONE SHOP COAT RED OXIDE AND TWO FINISH COATS ALUMINUM PAINT (AASHTO M69).

SIDEWALK CULVERT CONSTRUCTION NOTES:

A. MATCH NEAREST CONTROL JOINT, INSTALL 1/2" EXPANSION JOINT.
B. EDGE OF SIDEWALK OR SETBACK (VARIABLE).
C. 3" RADIUS (TYPICAL).
D. 3/8" CHECKERED STEEL PLATE (PAINT PER NOTE 6, ABOVE).
E. FOR SECURING PLATE USE 1" X 5" S.S. ROD ANCHOR, "RED HEAD MULTI–SET II SRM–38 ANCHOR" OR APPROVED EQUAL. INSTALL PER MANUFACTURER'S INSTRUCTIONS AT MAX. 24" O.C., A MINIMUM OF 2 PER SIDE AND ONE WITHIN 6" OF EACH END.
F. 3/8" – 16 X 1 1/4" COUNTERSUNK, F.H., STAINLESS STEEL, MACHINE SCREW.
G. SLOPE 1/4" PER FT. MIN.
H. DRAIN WIDTH PER PLAN (12" MIN., 24" MAX.).

DETAIL C
SIDEWALK CULVERT WITH STEEL PLATE TOP
NTS

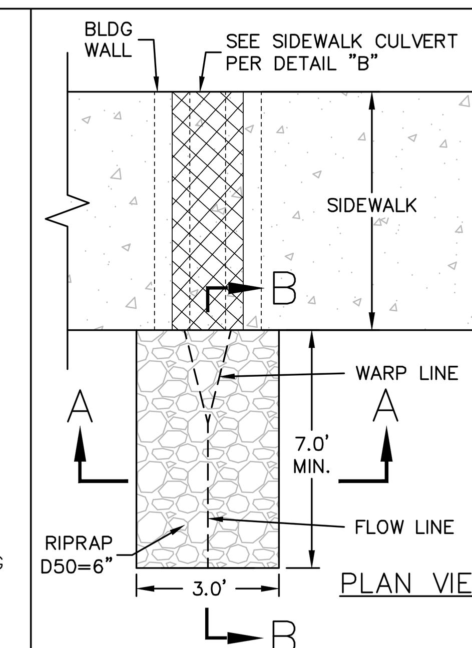

PLAN VIEW

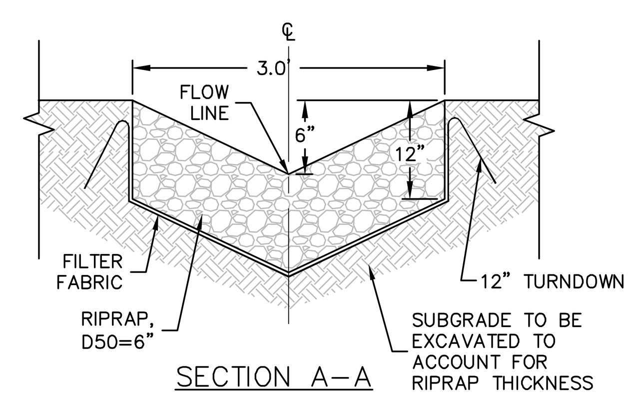

SECTION A–A

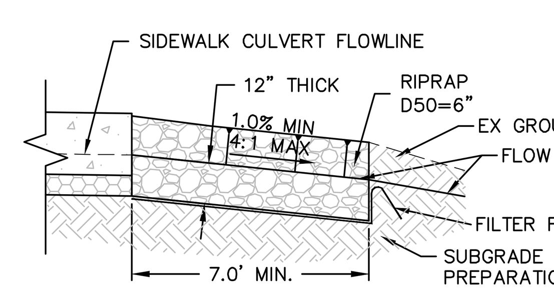

SECTION B–B

RIPRAP GRADATION TABLE

PERCENT PASSING	SIZE	D–50 CLASS RIPRAP (INCHES)			
		4	6	9	12
100 TO 90	2.0 D=50	8	12	18	24
85 TO 70	1.5 D=50	6	9	14	18
50 TO 30	1.0 D=50	4	6	9	12
15 TO 5	0.67 D=50	2.7	4	6	8
5 TO 0	0.33 D=50	1.3	2	3	4

NOTES:
1. RIPRAP SHALL BE PER SPECIFICATIONS.
2. SUBGRADE PREPARATION PER SPECIFICATIONS AND PER GEOTECHNICAL ENGINEERING REPORT PREPARED BY WESTERN TECHNOLOGIES, INC.
3. RIPRAP LAYOUT MAY VARY. REFER TO PLAN FOR DEVIATIONS.
4. FILTER FABRIC SHALL BE PER SPECIFICATIONS.

DETAIL D
SIDEWALK CULVERT RIPRAP
NTS

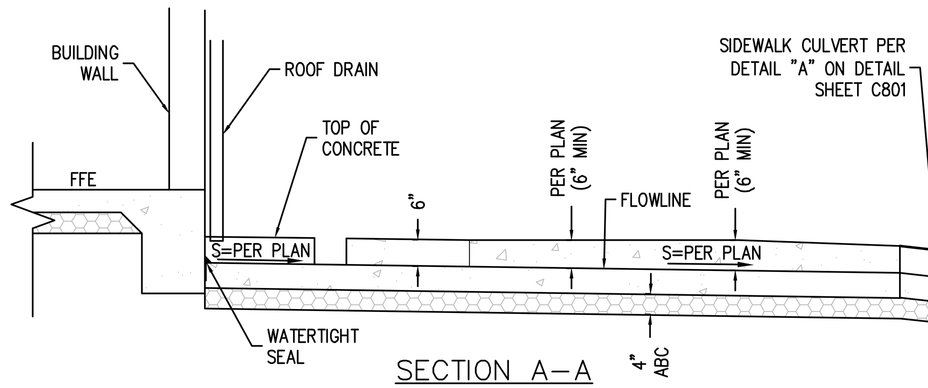

SECTION A–A

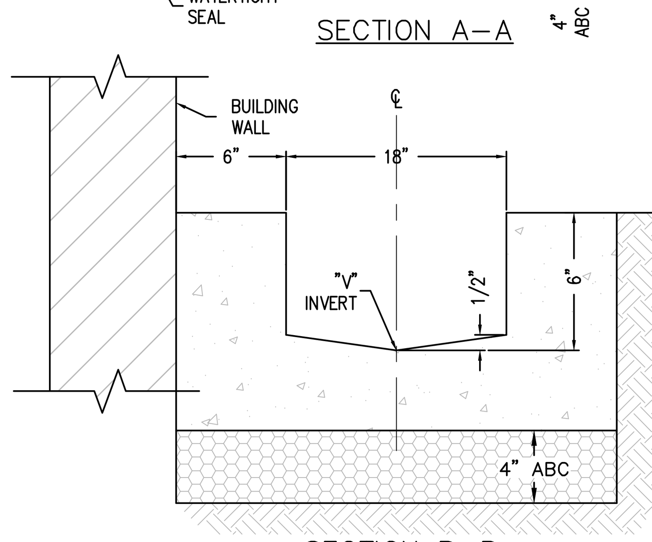

SECTION B–B

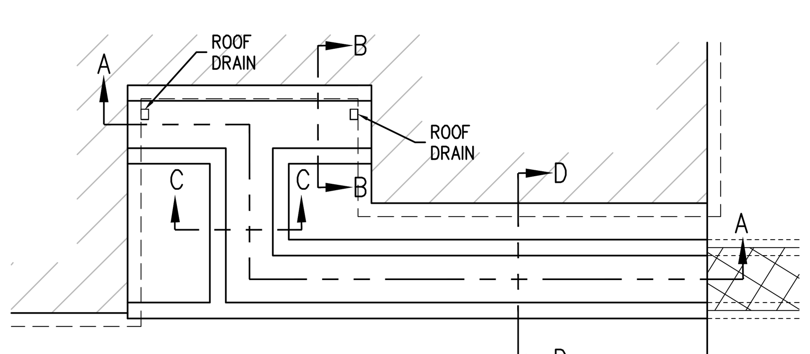

PLAN VIEW

NOTES:
1. CONCRETE FOR THE SPILLWAY SHALL BE 4,000 PSI PER SPECIFICATIONS.
2. SUBGRADE PREPARATION PER GEOTECHNICAL RECOMMENDATIONS.
3. S=SLOPE, SLOPE SHALL BE PER PLAN, MINIMUM SLOPE=0.5%

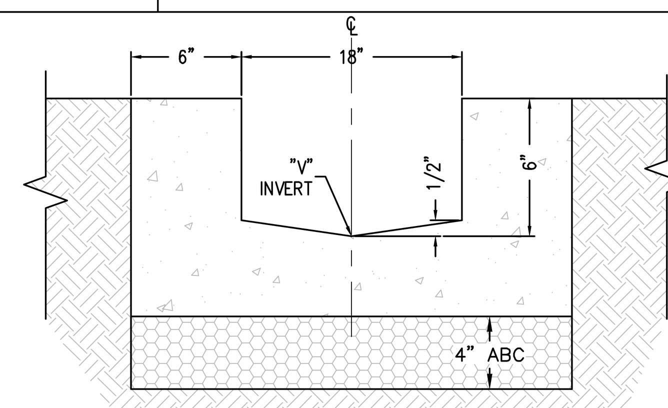

SECTION C–C

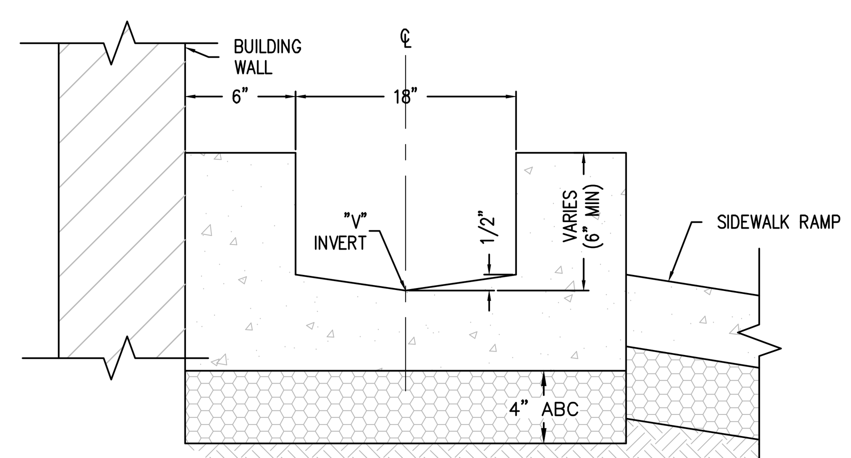

SECTION D–D

DETAIL E
SPILLWAY DETAIL
NTS

FLARED END SECTION

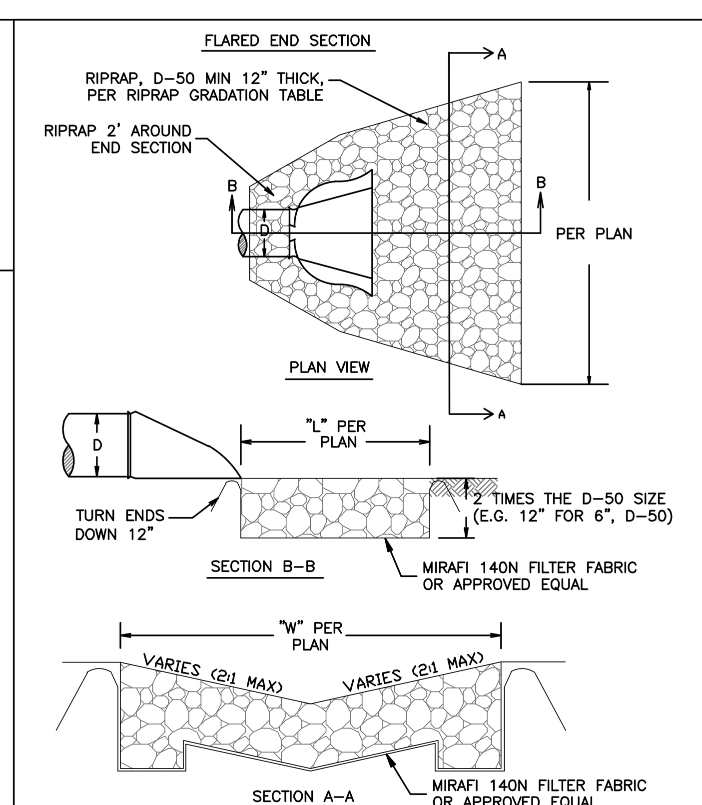

RIPRAP GRADATION TABLE

PERCENT PASSING	SIZE	D–50 CLASS RIPRAP, INCHES						
		6	9	12	18	24	36	30
100 to 90	2.0 D–50	12	18	24	36	48	72	60
85 to 70	1.5 D–50	9	14	18	27	36	54	45
50 to 30	1.0 D–50	6	9	12	18	24	36	30
15 to 5	0.67 D–50	4	6	8	12	16	24	20
5 to 0	0.33 D–50	2	3	4	6	8	12	10

RIPRAP
–RIPRAP SHALL HAVE A BULK SPECIFIC GRAVITY OF 2.4 OR GREATER (PER ASTM C127) AND ALL ROCK SHALL BE ANGULAR
–RIPRAP SHALL BE BETWEEN 3–INCHES AND 12–INCHES IN DIAMETER, WITH 50% (BY WEIGHT) LARGER THAN 6–INCHES IN DIAMETER UNLESS OTHERWISE SPECIFIED BY THE CITY ENGINEER

DETAIL F
CULVERT OUTLET RIPRAP
NTS

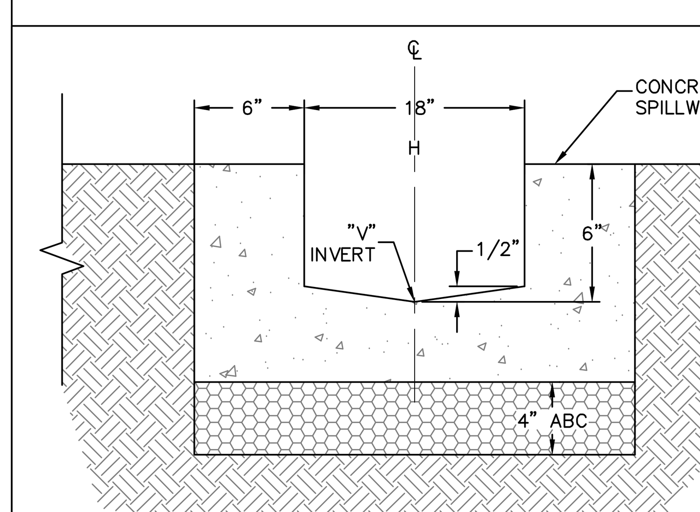

NOTES:
1. CONCRETE FOR THE SPILLWAY SHALL BE 4,000 PSI PER SPECIFICATIONS.
2. SUBGRADE PREPARATION PER GEOTECHNICAL RECOMMENDATIONS.

DETAIL G
CONCRETE SPILLWAY
NTS

HOZHO ENGINEERING, LLC
2733 E. Lakin Dr.
Suite 2
Flagstaff, AZ 86004
ph: (928) 779-0420
www.hozho-eng.com

STAMP

ALTON L. WILLIAMS
NEW MEXICO
22081
PROFESSIONAL ENGINEER
11/03/23

DYRON MURPHY ARCHITECTS, P.C.
4505 Montbel Place NE, Albuquerque, New Mexico 87107

SHIPROCK PINNACLE HOTEL & RESTAURANT

SHIPROCK, NEW MEXICO

100% CONSTRUCTION DOCUMENTS

ISSUED FOR CONSTRUCTION

NOVEMBER 3, 2023

PROJECT NUMBER	DRAWN BY	PROJ MGR
23009	HOZHO	AW

CIVIL DETAILS

Sheet Title

Sheet Number of

C801

10/25/2023 3:33:59 PM N:\Projects\2023\23009 Shiprock Pinnacle Hotel\DWG\23009-C8XX-DT.dwg
DYRON MURPHY ARCHITECTS, P.C.

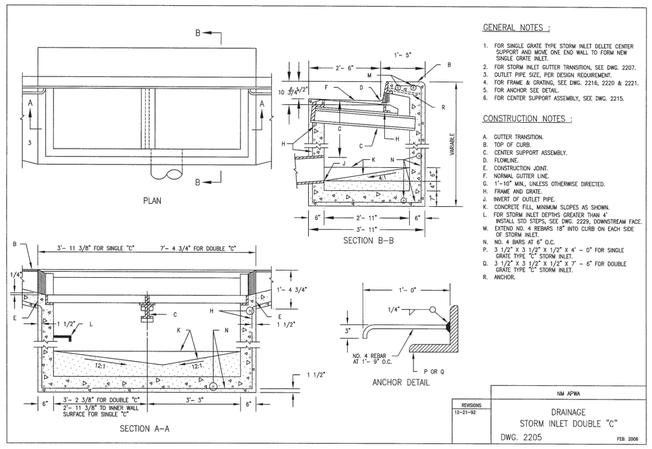

GENERAL NOTES :

1. FOR SINGLE GRATE TYPE STORM INLET DELETE CENTER SUPPORT AND MOVE ONE END WALL TO FORM NEW SINGLE GRATE INLET.
2. FOR STORM INLET GUTTER TRANSITION, SEE DWG. 2207.
3. OUTLET PIPE SIZE, PER DESIGN REQUIREMENT.
4. FOR FRAME & GRATING, SEE DWG. 2216, 2220 & 2221.
5. FOR ANCHOR SEE DETAIL.
6. FOR CENTER SUPPORT ASSEMBLY, SEE DWG. 2215.

CONSTRUCTION NOTES :

A. GUTTER TRANSITION.
B. TOP OF CURB.
C. CENTER SUPPORT ASSEMBLY.
D. FLOWLINE.
E. CONSTRUCTION JOINT.
F. NORMAL GUTTER LINE.
G. 1'-10" MIN., UNLESS OTHERWISE DIRECTED.
H. FRAME AND GRATE.
J. INVERT OF OUTLET PIPE.
K. CONCRETE FILL, MINIMUM SLOPES AS SHOWN.
L. FOR STORM INLET DEPTHS GREATER THAN 4' INSTALL STIO STEPS, SEE DWG. 2229, DOWNSTREAM FACE.
M. EXTEND NO. 4 REBARS 18" INTO CURB ON EACH SIDE OF STORM INLET.
N. NO. 4 BARS AT 8" O.C.
P. 3 1/2" X 3 1/2" X 1/2" X 4" - 0" FOR SINGLE GRATE TYPE "C" STORM INLET.
Q. 3 1/2" X 3 1/2" X 1/2" X 7' - 6" FOR DOUBLE GRATE TYPE "C" STORM INLET.
R. ANCHOR.

REVISIONS	NM APWA
12-21-92	DRAINAGE STORM INLET DOUBLE "C" DWG. 2205 FEB. 2006

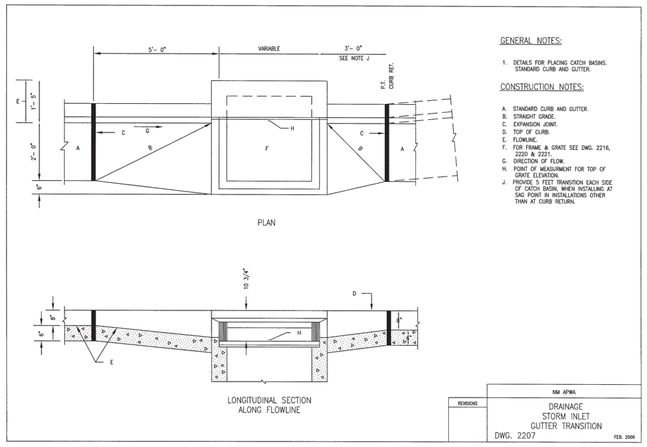

GENERAL NOTES:

1. DETAILS FOR PLACING CATCH BASINS. STANDARD CURB AND GUTTER.

CONSTRUCTION NOTES:

A. STANDARD CURB AND GUTTER.
B. STRAIGHT GRADE.
C. EXPANSION JOINT.
D. TOP OF CURB.
E. FLOWLINE.
F. FOR FRAME & GRATE SEE DWG. 2216, 2220 & 2221.
G. DIRECTION OF FLOW.
H. POINT OF MEASUREMENT FOR TOP OF GRATE ELEVATION.
J. PROVIDE 3 FEET TRANSITION EACH SIDE OF CATCH BASIN, WHEN INSTALLING AT SAG POINT IN INSTALLATIONS OTHER THAN AT CURB RETURN.

REVISIONS	NM APWA
	DRAINAGE STORM INLET GUTTER TRANSITION DWG. 2207 FEB. 2006

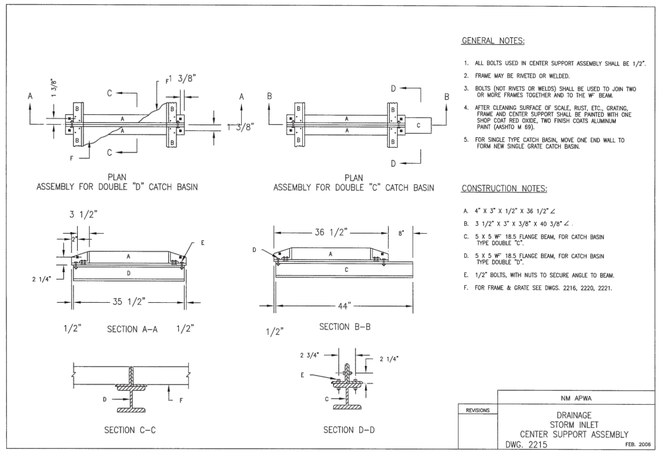

GENERAL NOTES:

1. ALL BOLTS USED IN CENTER SUPPORT ASSEMBLY SHALL BE 1/2".
2. FRAME MAY BE RIVETED OR WELDED.
3. BOLTS (NOT RIVETS OR WELDS) SHALL BE USED TO JOIN TWO OR MORE FRAMES TOGETHER AND TO THE W' BEAM.
4. AFTER CLEANING SURFACE OF SCALE, RUST, ETC., GRATING, FRAME AND CENTER SUPPORT SHALL BE PAINTED WITH ONE SHOP COAT RED OXIDE. TWO FINISH COATS ALUMINUM PAINT (AASHTO M 69).
5. FOR SINGLE TYPE CATCH BASIN, MOVE ONE END WALL TO FORM NEW SINGLE GRATE CATCH BASIN.

CONSTRUCTION NOTES:

A. 4" X 3" X 1/2" X 36 1/2" ∠
B. 3 1/2" X 3" X 3/8" X 40 3/8" ∠
C. 5 X 5 W' 18.5 FLANGE BEAM, FOR CATCH BASIN TYPE DOUBLE "C".
D. 5 X 5 W' 18.5 FLANGE BEAM, FOR CATCH BASIN TYPE DOUBLE "D".
E. 1/2" BOLTS, WITH NUTS TO SECURE ANGLE TO BEAM.
F. FOR FRAME & GRATE SEE DWGS. 2216, 2220, 2221.

REVISIONS	NM APWA
	DRAINAGE STORM INLET CENTER SUPPORT ASSEMBLY DWG. 2215 FEB. 2006

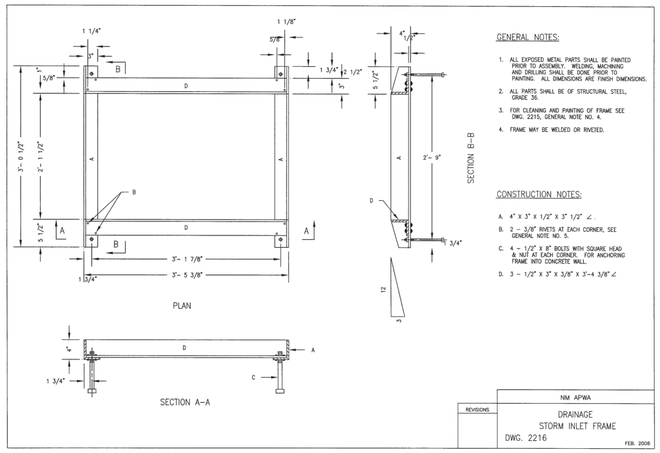

GENERAL NOTES:

1. ALL EXPOSED METAL PARTS SHALL BE PAINTED PRIOR TO ASSEMBLY. WELDING, MACHINING AND DRILLING SHALL BE DONE PRIOR TO PAINTING. ALL DIMENSIONS ARE FINISH DIMENSIONS.
2. ALL PARTS SHALL BE OF STRUCTURAL STEEL, GRADE 36.
3. FOR CLEANING AND PAINTING OF FRAME SEE DWG. 2215, GENERAL NOTE NO. 4.
4. FRAME MAY BE WELDED OR RIVETED.

CONSTRUCTION NOTES:

A. 4" X 3" X 1/2" X 3" 1/2" ∠
B. 2 - 3/8" RIVETS AT EACH CORNER, SEE GENERAL NOTE NO. 5.
C. 4 - 1/2" X 8" BOLTS WITH SQUARE HEAD & NUT AT EACH CORNER. FOR ANCHORING FRAME INTO CONCRETE WALL.
D. 3 - 1/2" X 3" X 3/8" X 3'-4 3/8" ∠

REVISIONS	NM APWA
	DRAINAGE STORM INLET FRAME DWG. 2216 FEB. 2006

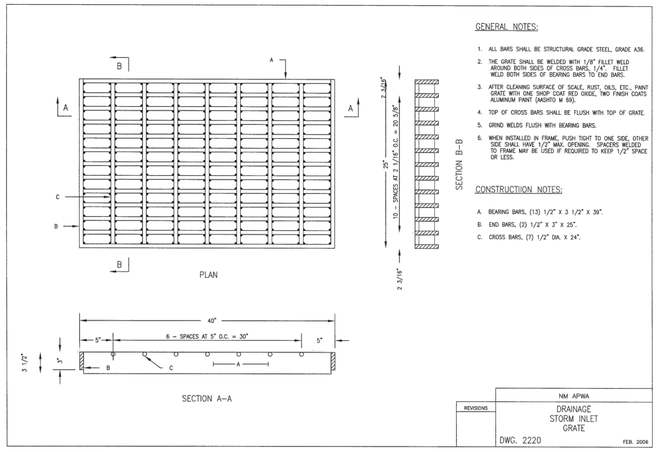

GENERAL NOTES:

1. ALL BARS SHALL BE STRUCTURAL GRADE STEEL, GRADE A36.
2. THE GRATE SHALL BE WELDED WITH 1/8" FILLET WELD AROUND BOTH SIDES OF CROSS BARS, 1/4" FILLET WELD BOTH SIDES OF BEARING BARS TO END BARS.
3. AFTER CLEANING SURFACE OF SCALE, RUST, OILS, ETC., PAINT GRATE WITH ONE SHOP COAT RED OXIDE, TWO FINISH COATS ALUMINUM PAINT (AASHTO M 69).
4. TOP OF CROSS BARS SHALL BE FLUSH WITH TOP OF GRATE.
5. GRIND WELDS FLUSH WITH BEARING BARS.
6. WHEN INSTALLED IN FRAME, PUSH TIGHT TO ONE SIDE, OTHER SIDE SHALL HAVE 1/2" MAX. OPENING. SPACERS WELDED TO FRAME MAY BE USED IF REQUIRED TO KEEP 1/2" SPACE OR LESS.

CONSTRUCTIION NOTES:

A. BEARING BARS, (13) 1/2" X 3 1/2" X 39".
B. END BARS, (2) 1/2" X 3" X 25".
C. CROSS BARS, (7) 1/2" DIA. X 24".

REVISIONS	NM APWA
	DRAINAGE STORM INLET GRATE DWG. 2220 FEB. 2006

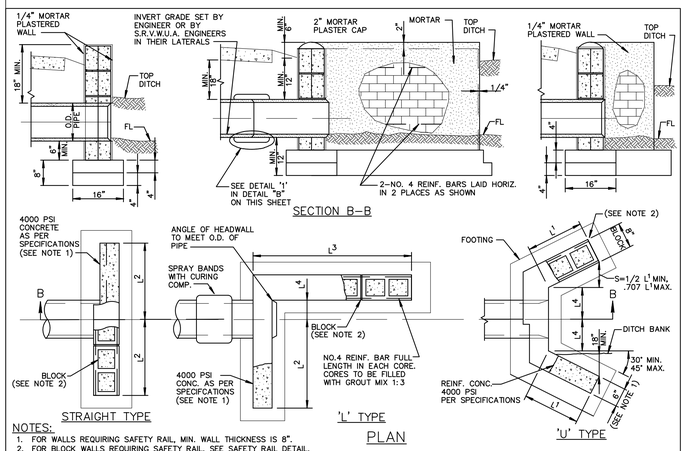

NOTES:

1. FOR WALLS REQUIRING SAFETY RAIL, MIN. WALL THICKNESS IS 8".
2. FOR BLOCK WALLS REQUIRING SAFETY RAIL, SEE SAFETY RAIL DETAIL, NOTE 8.

DETAIL A
HEADWALL
NTS

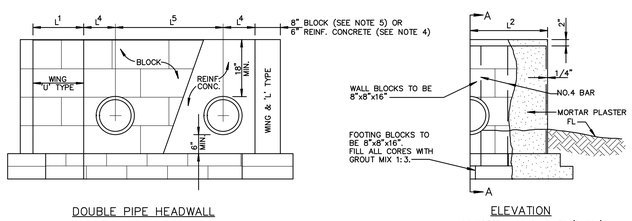

CONCRETE MASONRY UNITS (BLOCK) HEADWALLS JOINED WITH CEMENT MORTAR PLASTERED BOTH SIDES OF WALL FULL HEIGHT AND SHALL BE CURED PER SPECIFICATIONS.

NOTES:

1. ALL CONCRETE SHALL BE 4000 PSI PER SPECIFICATIONS.
2. CONCRETE MASONRY UNITS (BLOCK) PER SPECIFICATIONS.
3. CONCRETE REINFORCEMENT SHALL BE NO.4 BAR 12" O.C. BOTH WAYS.
4. FOR WALLS REQUIRING SAFETY RAIL, MIN. WALL THICKNESS IS 8". SEE DETAIL FOR ADDITIONAL REQUIREMENTS.
5. FOR BLOCK WALLS REQUIRING SAFETY RAIL, SEE DETAIL, NOTE 8.

HEADWALL DIMENSIONS

*NOMINAL PIPE SIZE	L1	L2	L3	L4	L5
12"	1'-4"	2'-0"	3'-8"	0'-10"	2'-10"
15"	2'-0"	2'-8"	4'-0"	1'-0"	3'-0"
18"	2'-0"	3'-8"	4'-8"	1'-2"	3'-4"
21"	2'-8"	4'-0"	5'-4"	1'-3"	3'-8"
24"	2'-8"	4'-0"	5'-4"	1'-6"	3'-11"
30"	2'-8"	5'-4"	6'-8"	1'-10"	4'-7"
36"	3'-4"	6'-8"	8'-0"	1'-10"	5'-2"
42"	4'-0"	8'-0"	9'-4"	2'-2"	5'-9"

* NOMINAL PIPE SIZE GIVEN FOR REINFORCED CONC. PIPE.

DETAIL B
HEADWALL
NTS

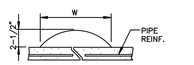

PIPE SIZE	W
12" - 21" INCL.	11"
24" - 42" INCL.	13"

DETAIL '1'

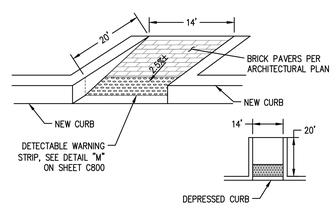

NOTES:

1. SEE GEOTECHNICAL REPORT AND PROJECT SPECIFICATIONS FOR COMPACTION AND EARTHWORK RECOMMENDATIONS.
2. 4,000 PSI CONCRETE PER SPECIFICATIONS.

DETAIL C
SIDEWALK RAMP
NTS

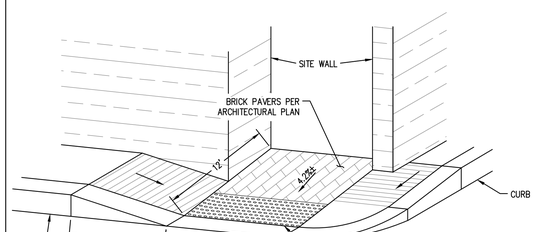

NOTES:

1. SEE GEOTECHNICAL REPORT AND PROJECT SPECIFICATIONS FOR COMPACTION AND EARTHWORK RECOMMENDATIONS.
2. 4,000 PSI CONCRETE PER SPECIFICATIONS.

DETAIL D
SIDEWALK RAMP
NTS

HOZHO ENGINEERING, LLC
2733 E. Lakin Dr.
Suite 2
Flagstaff, AZ 86004
ph: (928) 779-0420
www.hozho-eng.com

STAMP

ALTON L. WILLIAMS NEW MEXICO 22081 PROFESSIONAL ENGINEER 11/03/23

DYRON MURPHY ARCHITECTS, P.C.
4505 Montbel Place NE, Albuquerque, New Mexico 87107

SHIPROCK PINNACLE HOTEL & RESTAURANT

SHIPROCK, NEW MEXICO

100% CONSTRUCTION DOCUMENTS

ISSUED FOR CONSTRUCTION

NOVEMBER 3, 2023

PROJECT NUMBER	DRAWN BY	PROJ MGR
23009	HOZHO	AW

CIVIL DETAILS

Sheet Title

Sheet Number C802 of

N:\Projects\2023\2009 Shiprock Pinnacle Hotel\DWG\2009C-SHX-07.dwg
10/20/2023 3:33:38 PM
DYRON MURPHY ARCHITECTS, P.C.

GENERAL NOTES FOR WATER SERVICE

1. PROVIDE 10 FEET MINIMUM HORIZONTAL SEPARATION IN SEPARATE TRENCHES, BETWEEN SEWER AND WATER SERVICES BEYOND THE BUILDING PLUMBING, TO THE TAP LOCATION. PROVIDE 5 FEET MINIMUM HORIZONTAL SEPARATION BETWEEN SEWER SERVICE AND ALL OTHER UTILITIES. FOR SEWER AND WATER CROSSINGS, PROVIDE A MINIMUM OF 12-INCH VERTICAL CLEARANCE, BETWEEN PIPE OUTSIDE DIAMETER (O.D.) TO PIPE O.D. IF SEWER SERVICE CROSSES OTHER UTILITIES, ALL STIPULATIONS FOR THE OTHER UTILITY MUST BE MET.
2. BUILDING PLUMBING: WATER AND SEWER SERVICES TO BE INSTALLED IN ACCORDANCE WITH NTUA STANDARDS AND TECHNICAL SPECIFICATIONS.
3. WATER SERVICE LATERALS SHALL HAVE A MINIMUM COVER OF 36" AND SHALL BE INSTALLED IN CONFORMANCE WITH NTUA STANDARDS AND TECHNICAL SPECIFICATIONS.
4. TAP SADDLES SHALL BE SINGLE STRAP, BAND TYPE SIZED FOR STEEL PIPE O.D., ON PVC PIPE. TAP SADDLES SHALL BE DOUBLE STRAP, BAND TYPE FOR D.I., A.C., AND/OR C-900 PIPE. FOR 2" PIPING, A 2" x 1" CLASS 200, PVC TEE SHALL BE USED. CONTACT NTUA HEADQUARTERS CIVIL ENGINEERING DEPARTMENT ON PIPING SMALLER THAN 2".
5. PROVIDE THE AS-BUILT SWING TIE INFORMATION FOR THE TAP POINT AND OTHER APPURTENANCES INSTALLED, ON SHEET 7 of 8.
6. THE WATER METER SHALL BE CENTERED INSIDE THE METER CAN AND SET A MAXIMUM OF 24" BELOW THE TOP OF GRADE.
7. THE METER CAN SHALL BE LOCATED JUST BEYOND THE SIDEWALK/BACK OF CURB, BEFORE THE PROPERTY LINE, OR WITH OWNER'S PERMISSION A MINIMUM OF 10.0' FROM THE BUILDING.
8. WATER SERVICE LINES ARE LIMITED TO A MAXIMUM OF 200.0'. IF THE PRESSURE AT THE HOME SITE IS ABOVE 70 PSI, INSTALL THE APPROPRIATE TANDEM COPPERSETTER WITH AN INDIVIDUAL PRV. (ITEM 8a FROM THE MATERIAL LIST; FOR 5/8" x 3/4" METER: SHEET 3 OF 8 AND FOR 1" METER: SHEET 4 OF 8).
9. USE UTILITY MARKER TEE POSTS WHERE APPROPRIATE, PER NTUA STD. DTL. WS-13.
10. SUBMIT CONSTRUCTION COST (COST OF PLANT) OF NEW INSTALLATIONS UP TO AND INCLUDING THE METER POINT. INDICATE AS FOLLOWS:

    A. MATERIAL COST
    B. LABOR COST
    C. EQUIPMENT COST
    D. TOTAL CONSTRUCTION COST

    THE COST SHALL BE SHOWN ON SHEET 5 of 5 OF THE TRANSFER AGREEMENT.
11. SHEETS 3 OF 8 AND 4 OF 8 ARE FOR RESIDENTIAL INSTALLATIONS ONLY. FOR ALL OTHER PROJECTS, SUBMIT 2 PLAN SETS OF PROPOSED DRAWINGS AND 4 PLAN SETS OF COMPLETE AS-BUILT DRAWINGS ALONG WITH THE FINAL TRANSFER PACKAGE.
12. IF THERE IS A CONFLICT BETWEEN THESE STANDARD DETAILS FOR WATER AND ANY OTHER SECTION OF THE DETAILS AND/OR THE APPROVED PLANS, THEN THE MORE STRINGENT, AS DETERMINED BY THE NAVAJO TRIBAL UTLITIY AUTHORITY (NTUA), SHALL APPLY.

SHEET 5 OF 8

NAVAJO TRIBAL UTILITY AUTHORITY — ENGINEERING & CONSTRUCTION OPERATIONS DIVISION — GENERAL NOTES FOR WATER SERVICE — NTUA HEADQUARTERS, FT.DEFIANCE, AZ — DETAIL NO. WS-1d — 8

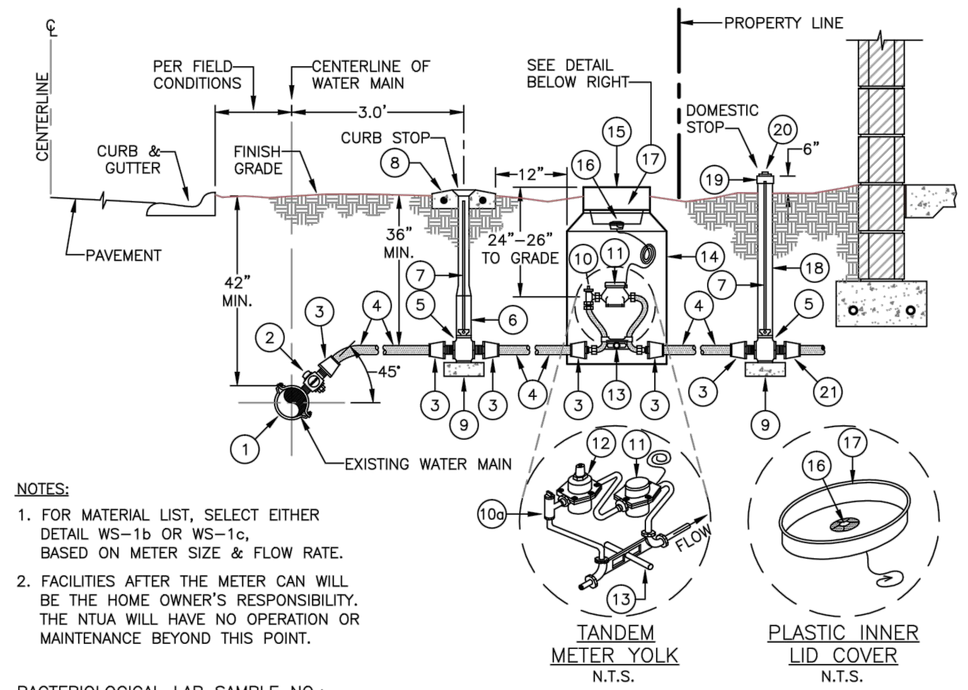

NOTES:
1. FOR MATERIAL LIST, SELECT EITHER DETAIL WS-1b OR WS-1c, BASED ON METER SIZE & FLOW RATE.
2. FACILITIES AFTER THE METER CAN WILL BE THE HOME OWNER'S RESPONSIBILITY. THE NTUA WILL HAVE NO OPERATION OR MAINTENANCE BEYOND THIS POINT.

BACTERIOLOGICAL LAB SAMPLE NO.: __________
DATE PERFORMED: __________. LAB SAMPLE NO.: _______. INITIALED (NTUA): ______.

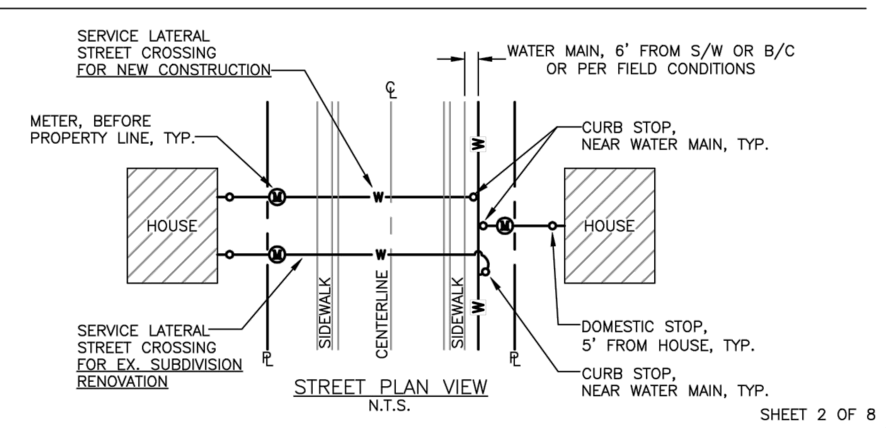

SHEET 2 OF 8

NAVAJO TRIBAL UTILITY AUTHORITY — ENGINEERING & CONSTRUCTION OPERATIONS DIVISION — 1" WATER SERVICE FOR A 5/8" x 3/4" OR 1" METER (URBAN AREA) — DETAIL NO. WS-1a — 5

1" WATER SERVICE FOR A 1" METER		
(#)		MATERIAL LIST
ITEM	QTY	DESCRIPTION
1	1	SADDLE, BRASS, 1" FIPT TAP x APPROPRIATE LINE SIZE, TYPE, AND PRESSURE RATING
2	1	1" CORPORATION STOP, MIPT x FIPT
3	6	1" INSTA-TITE FITTING, MIPT x STAB, FOR SIDR 7 P.E. PIPE
4	A.R.	1" PIPE, P.E., ASTM D-2239, SIDR 7, 250 PSI RATED, 200' MAX. LENGTH
5	1	1" CURB STOP, FIPT x FIPT, MINNEAPOLIS PATTERN
6	1	CURB STOP BOX, EXTENSION TYPE, W/ 2" x 1-1/2" BUSHING
7	2	STATIONARY ROD, 36" LONG FOR CURB STOP & 36" LONG FOR DOMESTIC STOP, SECURED TO THE CURB & DOMESTIC STOPS W/ COTTER PIN
8	A.R.	CONCRETE COLLAR FOR CURB STOP, 12" x 12" x 4" THICK, W/ #4 REBARS, E.W.O.C., SLOPE @ 2%
9	A.R.	CONCRETE BLOCK OR BRICK, OVER COMPACTED BACKFILL
10	1	COPPERSETTER W/ VALVED 12" RISER FOR 1" WATER METER, W/ 1" I.P. UNION NUT/SWIVEL ASSEMBLY CONNECTION ON INLET & OUTLET AND BRACING EYE
10a	1	TANDEM COPPERSETTER W/ VALVED 12" RISER, FOR 1" WATER METER, W/ TWO REGULATOR ADAPTERS FOR THE INDIVIDUAL P.R.V.
11	1	1" METER, ELSTER AMCO C700, POSITIVE DISPLACEMENT, GALLONS, COMPLETE W/ EA. MODULE FOR A.MI. METERING TECHNOLOGY
12	1	3/4" P.R.V., FIPT x FIPT
13	1	1/2" DIA. STABILIZER BRACE, 18" LONG, PVC PIPE, SCH. 40
14	1	METER PIT, PLASTIC, 20" DIA. x 30" HT.
15	1	METER PIT COVER W/ FROST LID, FOR 20" DIA. METER CAN, 11-1/2" MINIMUM LID OPENING
16	1	E.A. MODULE FOR A.M.I. METERING TECHNOLOGY
17	1	PLASTIC INNER COVER LID & HOUSING UNIT FOR E.A. MODULE. (#W3BPD STYLE)
18	1	3" RISER, 36" LONG, PVC, SCH. 40
19	1	3" ADAPTER, HUB x FIPT, PVC, SCH. 40
20	1	3" CLEANOUT PLUG, MIPT, PVC, SCH. 40
21	1	1" CONNECTOR/ADAPTER, MIPT x APPROPRIATE LINE SIZE, TYPE, AND PRESSURE RATING
22	A.R.	5' STEEL TEE POST, PAINTED BLUE OR BLUE CARSONITE MARKER POST W/ PROPER WARNING DECAL

GENERAL NOTES:
1. NORMAL FLOW RATE = 3-50 GPM.
2. A.R. = AS REQUIRED
3. NTUA WILL NOT PROVIDE WATER METERS FOR SUBDIVISIONS AND DEVELOPERS. METERS TO BE PURCHASED FROM THE NTUA FOR PROPER A.M.I. PROGRAMMING.
4. WATER METER SERIAL NUMBER:____________________.
5. SADDLE SIZE:____________________.

SHEET 4 OF 8

NAVAJO TRIBAL UTILITY AUTHORITY — ENGINEERING & CONSTRUCTION OPERATIONS DIVISION — MATERIAL LIST: 1" WATER SERVICE WITH 1" METER — DETAIL NO. WS-1c — 7

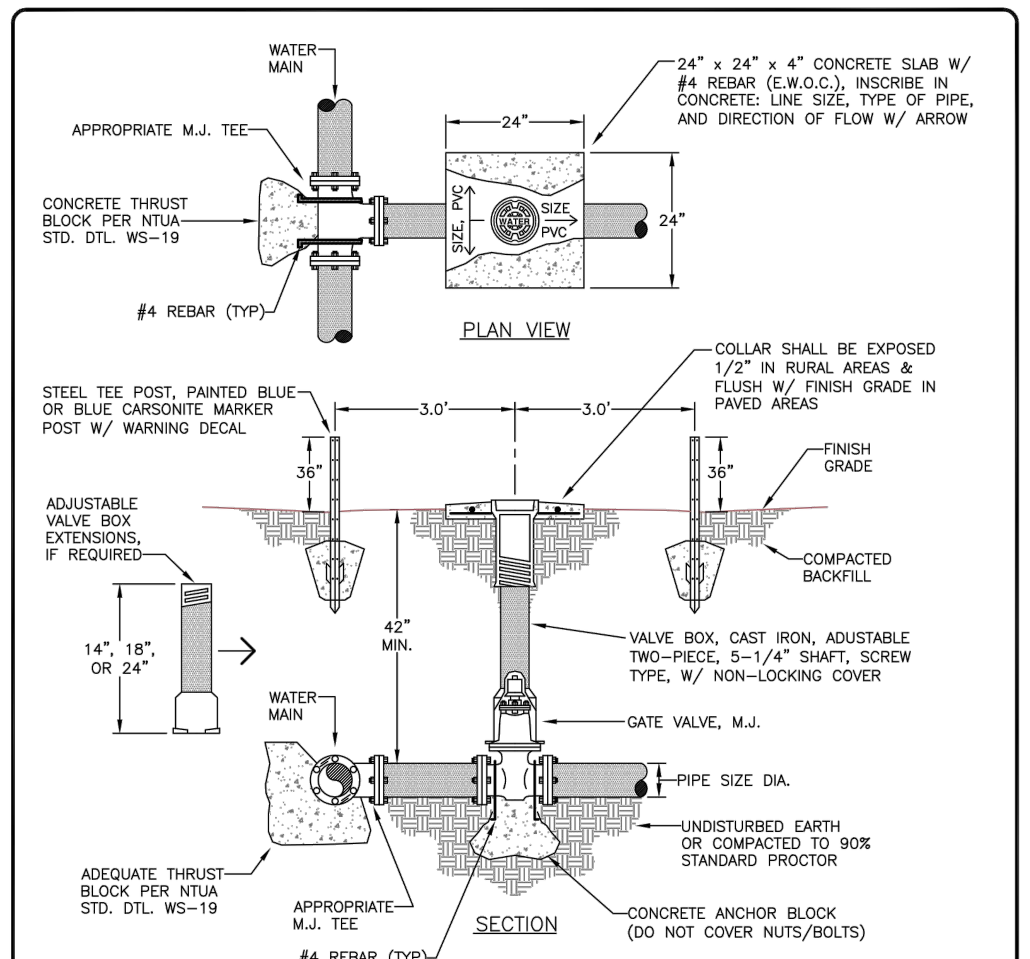

GENERAL NOTES:
1. USE SERIES 2000, PV MEGALUG GLANDS TO SECURE GATE VALVE(S) TO SDR-21, PVC PIPE.
2. USE SERIES 1100 MEGALUG GLANDS TO SECURE GATE VALVE(S) TO DUCTILE IRON PIPE.
3. DO NOT COVER JOINTS AND BOLTS WITH CONCRETE.
4. SEE WS-13 FOR APPROPRIATE LOCATIONS OF MARKER POST.
5. INSTALL #4 REBARS TO THE GATE VALVE & CONCRETE ANCHOR BLOCK.

NAVAJO TRIBAL UTILITY AUTHORITY — ENGINEERING & CONSTRUCTION OPERATIONS DIVISION — WATER MAINLINE TAP W/ GATE VALVE — DETAIL NO. WS-16 — 40

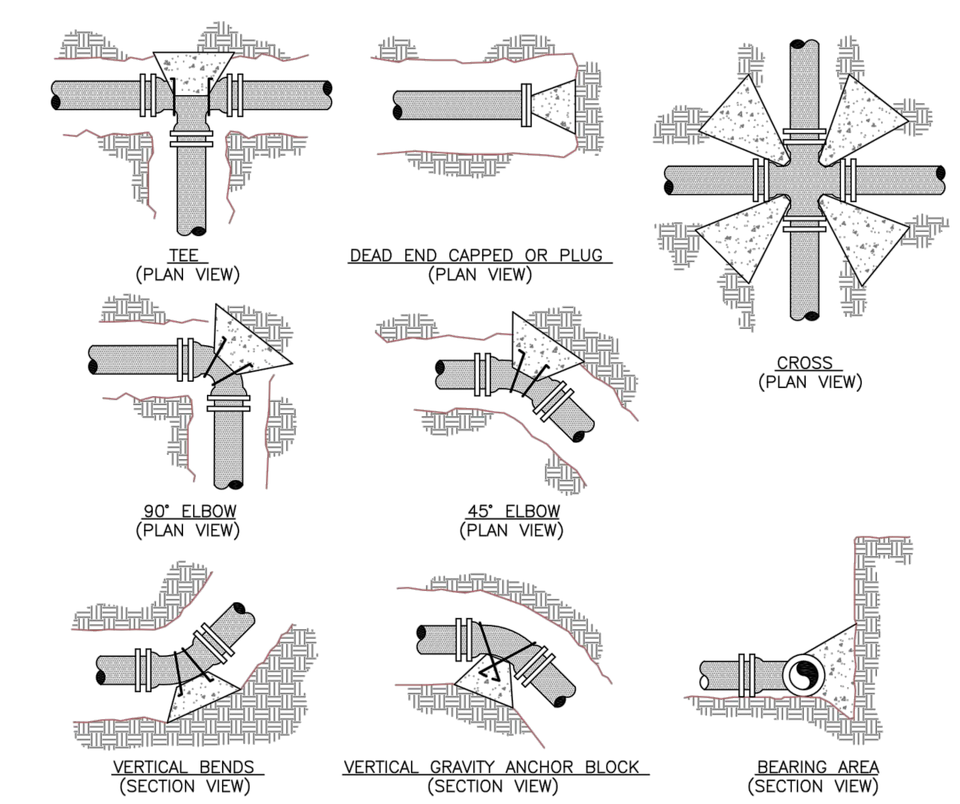

MINIMUM BEARING AREAS IN SQUARE FEET				
PIPE SIZE	TEE & PLUG	90° ELBOW	45° OR 22 1/2° ELBOW	CROSS
2"	0.5	0.5	0.5	0.5
4"	1.5	2.0	1.5	1.0
6"	3.0	4.5	2.5	2.0
8"	5.0	7.5	4.0	4.0
10"	8.0	11.0	6.5	5.5
12"	11.0	15.5	9.0	8.0
14"	15.0	21.0	12.0	10.5
16"	19.0	27.0	15.5	13.5
18"	24.0	34.0	19.0	17.0

NOTES:
1. DO NOT COVER GASKETED JOINTS AND NUTS/BOLTS.
2. PRESSURE TESTING SHALL NOT COMMENCE UNTIL THE CONCRETE HAS SET A MINIMUM OF 48 HRS., UNLESS OTHERWISE SPECIFIED.
3. #4 REBARS AS SHOWN.

SHEET 1 OF 2

NAVAJO TRIBAL UTILITY AUTHORITY — ENGINEERING & CONSTRUCTION OPERATIONS DIVISION — CONCRETE THRUST BLOCK DETAILS — DETAIL NO. WS-19 — 44

CONCRETE THRUST BLOCK CHART
(ALSO TO BE USED IN UNSTABLE TRENCH CONDITIONS)

RESULTANT THRUST IN POUNDS OF FITTINGS AT 100 PSI WATER PRESSURE

	TOTAL POUNDS				
PIPE SIZE	DEAD END	90° ELBOW	45° ELBOW	22 1/2° ELBOW	11 1/4° ELBOW
3"	1,232	1,742	943	481	241
4"	1,810	2,559	1,385	706	355
6"	3,739	5,288	2,862	1,459	733
8"	6,433	9,097	4,923	2,510	1,261
10"	9,677	13,685	7,406	3,776	1,897
12"	13,685	19,353	10,474	5,340	2,683
14"	18,385	26,001	14,072	7,174	3,604
16"	23,799	33,628	18,199	9,278	4,661
18"	29,865	42,235	22,858	11,653	5,855
20"	36,644	51,822	28,046	14,298	7,183
24"	52,279	73,934	40,013	20,398	10,249
30"	80,425	113,738	61,554	31,380	15,766
36"	115,209	162,931	88,177	44,952	22,585
42"	155,528	219,950	119,036	60,684	30,489
48"	202,683	286,637	155,127	79,083	39,733
54"	260,214	367,999	199,160	101,531	51,011
60"	298,121	421,606	228,172	116,321	58,442
64"	338,707	479,004	259,235	132,157	66,398

GENERAL NOTES:
1. THE THRUST (IN TOTAL POUNDS) IN THE CHART IS BASED ON DUCTILE IRON OUTSIDE DIAMETER PIPE DIMENSION. SURGES SHOULD BE CONSIDERED AT TWICE THE NORMAL OPERATING PRESSURE. THE VOLUME OF THE GRAVITY THRUST BLOCK IS BASED ON CONCRETE AT 150 LBS./FT3.
2. TO OBTAIN VOLUME OF CONCRETE REQUIRED, USE:
   VOLUME OF CONCRETE (CF)= THRUST (LBS.) x SYSTEM PRESSURE (PSI)/100 PSI // 150 LBS./CF

   E.G.: CALCULATE THE VOLUME OF THE GRAVITY THRUST BLOCK FOR AN 8" x 45° BEND AT AN OPERATING PRESSURE OF 80 PSI.

   ANSWER: 4923 LBS x 160 PSI / 100 PSI DIVIDED BY 150 LBS / CUBIC FT = 52.5 CUBIC FT OR 2 CUBIC YARDS.

SHEET 2 OF 2

NAVAJO TRIBAL UTILITY AUTHORITY — ENGINEERING & CONSTRUCTION OPERATIONS DIVISION — CONCRETE THRUST BLOCK CHART — DETAIL NO. WS-19a — 45

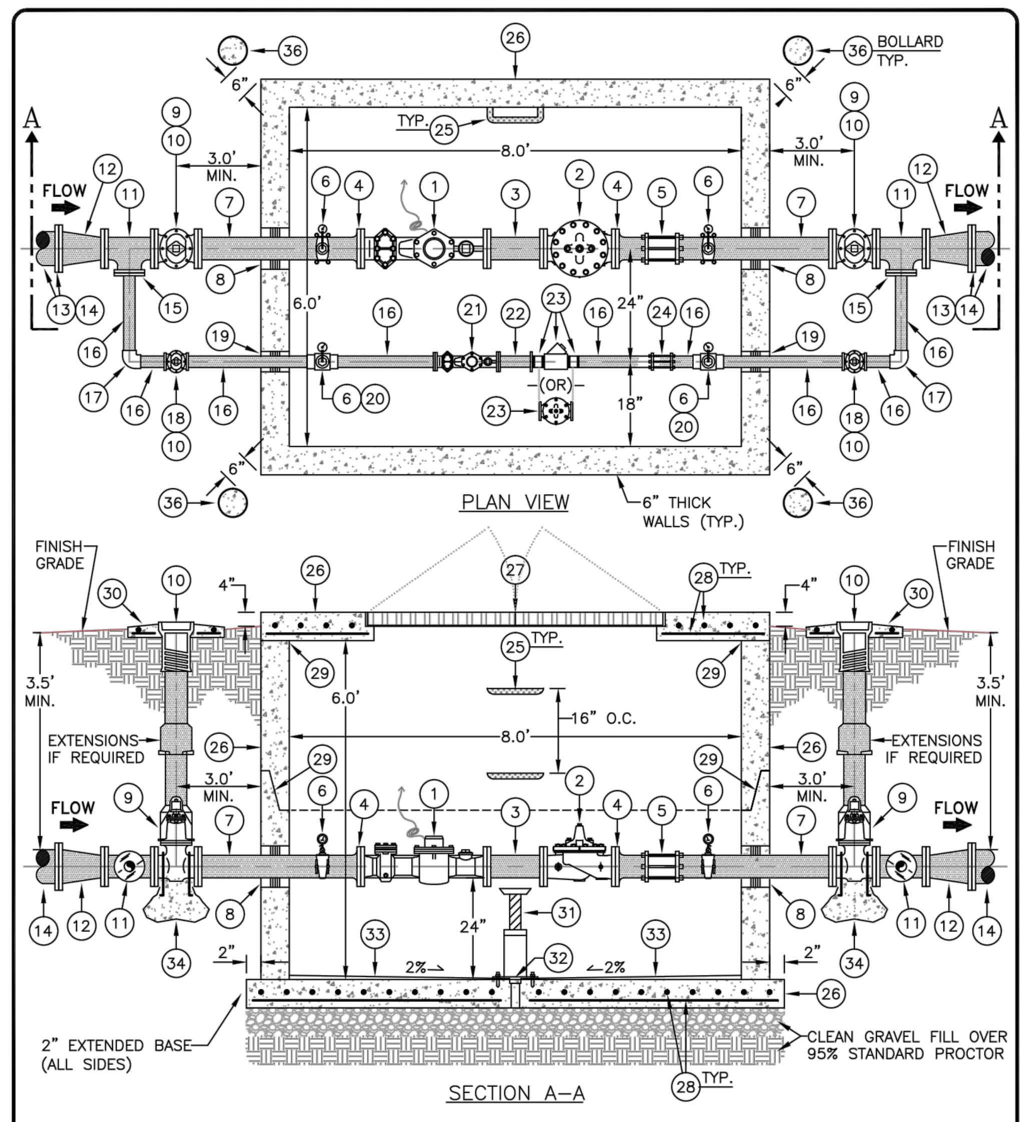

NOTES: 1. PROVIDE ADEQUATE CLEARANCE BETWEEN FLANGE BOLTS AND WALL FOR MAINTENANCE.
2. GATE VALVES AND TEES TO BE SUPPORTED ON 95% STANDARD PROCTOR.

SHEET 1 OF 2

NAVAJO TRIBAL UTILITY AUTHORITY — ENGINEERING & CONSTRUCTION OPERATIONS DIVISION — 4" x 2" METER ON 6" WATER LINE — DETAIL NO. WS-8 — 29

4" x 2" METER ON 6" WATER LINE		
(#)		MATERIAL LIST
ITEM	QTY	DESCRIPTION
1	1	4" ELSTER TS4000 TURBINE METER, FLANGED, GALLONS, W/ E.A. WATER MODULE (AMI)
2	1	4" CLA-VAL, PRESSURE REDUCING VALVE, FLANGED, 90 SERIES W/ OPTIONS A, B, C, D, & V. IF LINE PRESSURE IS 80 PSI OR LESS, INSTALL 4" BRASS CHECK VALVE.
3	A.R.	4" DUCTILE IRON (D.I.) SPOOL PIECE, CLASS 350 (LENGTH VARIES PER METER SIZE)
4	2	4" D.I. 'E-Z' FLANGED ADAPTER, CLASS 350
5	1	4" DRESSER COUPLING (6" LONG FOR D.I. PIPE)
6	4	PRESSURE GAUGE W/ 1/4" BRASS SHUTOFF VALVE (GLYCERIN)
7	A.R.	4" D.I. PIPE, CLASS 350, PLAIN END, CUT AS NEEDED
8	2	VAULT BORE DONUTS, 8" W/ 4" HOLE
9	2	4" GATE VALVE, M.J., RESILIENT SEAT, FLANGED, N.R.S., R.H.T., W/ 2" OPERATING NUT
10	2	VALVE BOX, 2-PIECE SCREW TYPE, 5-1/4" SHAFT W/ CAST IRON DROP LID
11	2	4" x 4" x 4" D.I. TEE, CLASS 350, FLANGED
12	2	6" x 4" D.I. REDUCER, CLASS 350, FLANGED
13	2	6" 'E-Z' FLANGED ADAPTER, D.I., CLASS 350
14	–	EXISTING 6" WATER MAIN LINE
15	2	4" x 2" D.I. BLIND REDUCING FLANGE, CLASS 350, F.I.P.T.
16	A.R.	2" STAINLESS STEEL PIPE, THREADED, CUT AS NEEDED
17	2	2" 90° STAINLESS STEEL ELBOW, F.I.P.T.
18	2	2" GATE VALVE, F.I.P.T., N.R.S., R.H.T., W/ 2" OPERATING NUT
19	2	VAULT BORE DONUTS, 6" W/ 2" HOLE
20	1	2" D.I. TEE, CLASS 350 W/ 2" x 3/4" BUSHING & 3/4' x 1/4" BUSHING FOR PRESSURE GAUGE
21	1	2" ELSTER TS4000 TURBINE METER, FLANGED, GALLONS, W/ E.A. WATER MODULE
22	A.R.	2" D.I. SPOOL PIECE, CLASS 350 (LENGTH VARIES PER METER SIZE)
23	1	INSTALL 2" BRASS CHECK VALVE, F.I.P.T., WITH 2" X 6" BRASS NIPPLES. IF UPSTREAM PRESSURE IS OVER 70 PSI, INSTALL 2" CLA-VAL, PRESSURE REDUCING VALVE, FLANGED, 90 SERIES W/ OPTIONS A, B, C, D, & V.
24	1	2" DRESSER COUPLING (6" LONG FOR S.S. PIPE)
25	A.R.	PLASTIC COATED STEEL OR ALUMINUM STEP @ 16" O.C., INSTALL TO 12" ABOVE VAULT FLOOR
26	1	8' x 6' x 6' (INT. DIM.) PRECAST CONCRETE VAULT (4,000 PSI MIN.), 6" THICK WALLS W/ 6" THICK REINFORCED CONCRETE TOP (8" THICK FOR TRAFFIC RATING) AND 6" REINFORCED CONCRETE BASE
27	1	5' x 5' SQ., INSULATED, DOUBLE DOOR COVER AND SAFETY GRATE, ALUMINUM CHANNEL FRAME W/ HANDLE SLAM LOCK AND COVERED PADLOCK CLIP
28	A.R.	#4 REBAR, E.W.O.C.
29	A.R.	VAULT JOINTS TO BE SEALED WITH BITUMASTIC OR GASKET
30	1	24" x 24" x 4" CONCRETE COLLAR W/ #4 REBAR, E.W., INDICATE PIPE SIZE & FLOW DIRECTION
31	A.R.	ADJUSTABLE METAL PIPE SUPPORT W/ TWO EQUALLY SPACED PIPE SUPPORTS ON BYPASS ASSEMBLY
32	1	2" FLOOR DRAIN W/ SCREEN, DRAIN TO 5" CLEAN GRAVEL (ADJUST PER FIELD CONDITIONS)
33	A.R.	CEMENT, NON-SHRINK GROUT, SLOPE FINISH @ 2% (0.02%) TOWARD VAULT DRAIN
34	A.R.	CONCRETE ANCHOR BLOCK PER NTUA STD. DTL. WS-19 & WS-19a
35	2	2" D.I. DOUBLE STRAP W/ 2" x 3/4" BUSHING AND 3/4" x 1/4" BUSING FOR PRESSURE GAGE
36	4	6" DIA. BOLLARDS AT 6" MIN. FROM VAULT CORNERS PER MAG. STD. 140, TYPE 1

SHEET 2 OF 2

NAVAJO TRIBAL UTILITY AUTHORITY — ENGINEERING & CONSTRUCTION OPERATIONS DIVISION — MATERIAL LIST: 4" x 2" METER ON 6" WATER LINE — DETAIL NO. WS-8a — 30

(Each NTUA title block: DESIGNED BY: NTUA; SURVEYED BY: –; DRAFTED BY: NTUA; APPROVED BY: NTUA; DATE: 08/2017; PROJECT NO. –; SCALE: NTS; ACAD FILENAME: 2017 NTUA Std. Dtls. for Water.dwg. REVISIONS: 01 04/08 Revised L.H.; 02 08/17 2017 Update A.S.)

HOZHO ENGINEERING, LLC
2733 E. Lakin Dr.
Suite 2
Flagstaff, AZ 86004
ph: (928) 779-0420
www.hozho-eng.com

STAMP
ALTON L. WILLIAMS — NEW MEXICO — 22081 — PROFESSIONAL ENGINEER — 11/03/23

DYRON MURPHY ARCHITECTS, P.C.
4505 Montbel Place NE, Albuquerque, New Mexico 87107

SHIPROCK PINNACLE HOTEL & RESTAURANT
SHIPROCK, NEW MEXICO
100% CONSTRUCTION DOCUMENTS
ISSUED FOR CONSTRUCTION
NOVEMBER 3, 2023

PROJECT NUMBER	DRAWN BY	PROJ MGR
23009	HOZHO	AW

WATER DETAILS
Sheet Title

Sheet Number of
C810

10/25/2023 3:33:59 PM N:\Projects\2023\23009 Shiprock Pinnacle Hotel\DWG\23009-C8XX-DT.dwg
DYRON MURPHY ARCHITECTS, P.C.

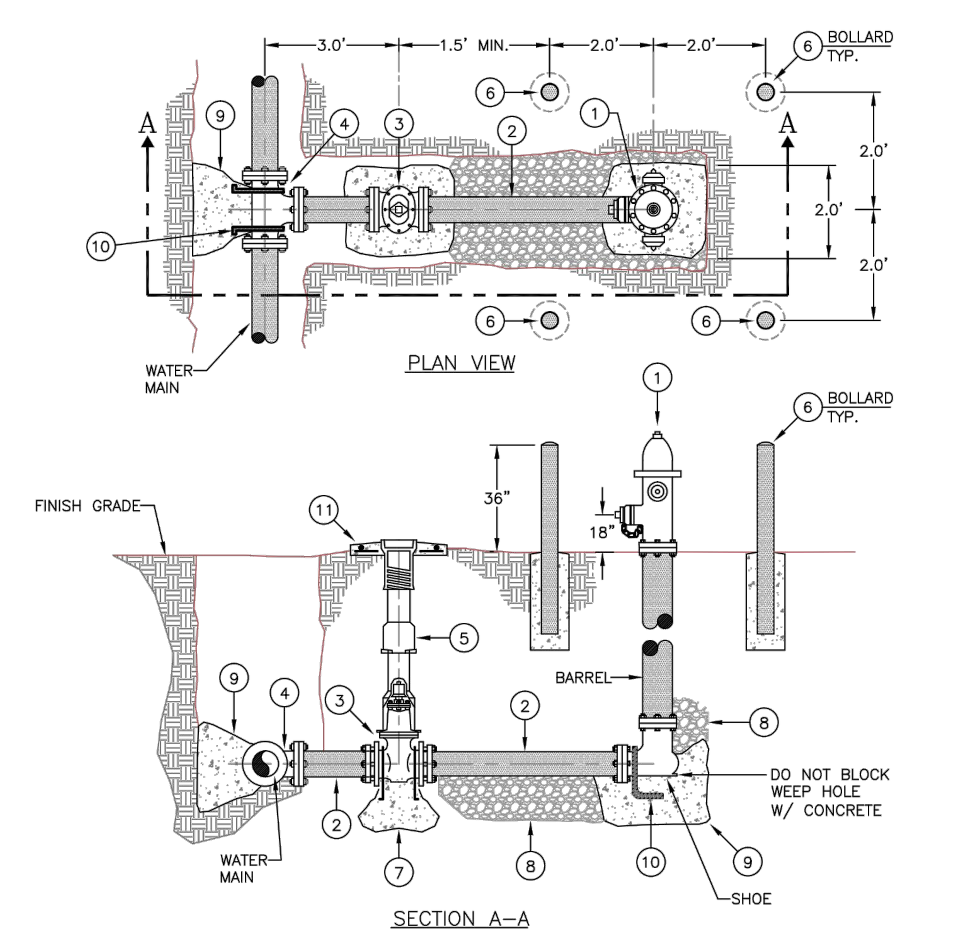

NOTES:
1. CONTRACTOR MAY SUBSTITUTE A COMBINATION OF SERIES 2000 PV MEGALUG GLANDS AND SERIES 6500 JOINTS RETAINERS (EBAA IRON) FOR FIRE HYDRANT CONCRETE BLOCKING.
2. FIRE HYDRANT GUARD BOLLARD TO BE SCHEDULE 40 STEEL, MIN.
3. PAINT GUARD BOLLARDS WITH RED EXTERIOR ENAMEL AND FILL HYDRANT GUARD POSTS WITH CONCRETE PER MAG STD. DTL. 140.
4. HYDRANT PUMPER NOZZLE TO BE FACING WATER MAIN AND/OR STREET.
5. THE NTUA DOES NOT PROVIDE FIRE FLOW.

SHEET 1 OF 2

DESIGNED BY: NTUA; SURVEYED BY: –; DRAFTED BY: NTUA; APPROVED BY: NTUA; DATE: 08/2017; PROJECT NO. –; SCALE: NTS; ACAD FILENAME: 2017 NTUA Std. Dtls. for Water.dwg; DETAIL NO. WS-12

NAVAJO TRIBAL UTILITY AUTHORITY
ENGINEERING & CONSTRUCTION OPERATIONS DIVISION
FIRE HYDRANT, VALVE, AND BOLLARD DETAIL
NTUA HEADQUARTERS FT.DEFIANCE, AZ

No.	Date	Brief	By
01	04/08	Revised	L.H.
02	08/17	2017 Update	A.S.

35

FIRE HYDRANT, VALVE, AND BOLLARD

MATERIAL LIST

ITEM	QTY	DESCRIPTION
1	1	HYDRANT, 4–FT BURY W/ TRAFFIC FLANGE & 1 – 4 1/2" PUMPER CONNECTION (A) 2 – 2 1/2" HOSE CONNECTION (B) MUELLER A423 OR KENNEDY K81A W/ 5 1/4" VALVE M.J.
2	2	6" PVC PIPE, LENGTH AS NEEDED, 200 PSI, SDR–21
3	1	6" M.J. GATE VALVE, NRS, RSW, RHT, 2" OPERATION NUT
4	1	M.J. TEE AS REQUIRED, M.J. 6" BRANCH
5	1	GATE VALVE BOX, 5 1/4" W/ CAST IRON LID, LID TYLER 6850
6	4	6" DIA. BOLLARD PER MAG. STD. 140, TYPE 1
7	A.R.	CONCRETE ANCHOR BLOCK, 1.5 CUBIC FEET MIN. (DON'T COVER JOINTS AND BOLTS)
8	A.R.	CRUSHED ROCK 1" TO 2" DIAMETER
9	A.R.	CONCRETE THRUST BLOCK, (SEE NTUA STANDARDS FOR TEE)
10	1	#4 REBAR TIE HOOP
11	1	CONCRETE COLLAR, 24" SQUARE x 4" THICK, W/ #4 REBAR, E.W.O.C., INSCRIBED W/ LINE SIZE, TYPE OF PIPE, AND DIRECTION OF FLOW W/ ARROW

NOTES:
1. A.R. = AS REQUIRED

SHEET 2 OF 2

DESIGNED BY: NTUA; SURVEYED BY: –; DRAFTED BY: NTUA; APPROVED BY: NTUA; DATE: 08/2017; PROJECT NO. –; SCALE: NTS; ACAD FILENAME: 2017 NTUA Std. Dtls. for Water.dwg; DETAIL NO. WS-12a

NAVAJO TRIBAL UTILITY AUTHORITY
ENGINEERING & CONSTRUCTION OPERATIONS DIVISION
MATERIAL LIST: FIRE HYDRANT, VALVE, AND BOLLARD
NTUA HEADQUARTERS FT.DEFIANCE, AZ

No.	Date	Brief	By
01	04/08	Revised	L.H.
02	08/17	2017 Update	A.S.

36

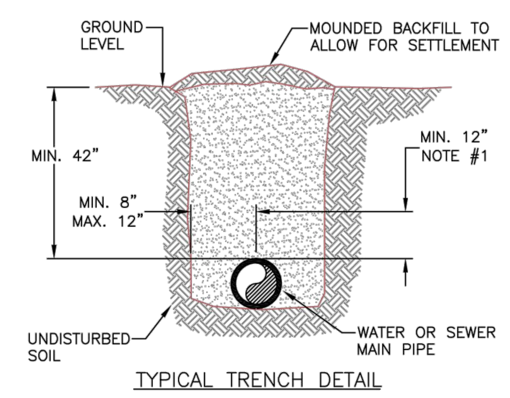

GENERAL NOTES:
1. HAND COMPACTED IN 6" LIFTS FROM BOTTOM OF TRENCH TO 12" ABOVE PIPE CROWN.
2. OPEN–CUT OF PAVED OR GRAVEL ROADS WILL REQUIRE BACK FILL AT MINIMUM COMPACTION OF 95% OPTIMUM DENSITY IN LIFTS.
3. REPAVING AND REGRAVELING WILL BE DONE TO ROAD OWNER'S REQUIREMENTS.
4. KEEP LOWER 5' OF TRENCH WALL VERTICAL, IF POSSIBLE. UPPER PART OF THE TRENCH WILL VARY IN WIDTH TO COMPENSATE FOR UNSTABLE SOIL. APPLICABLE O.S.H.A. REQUIREMENTS SHALL BE MET.

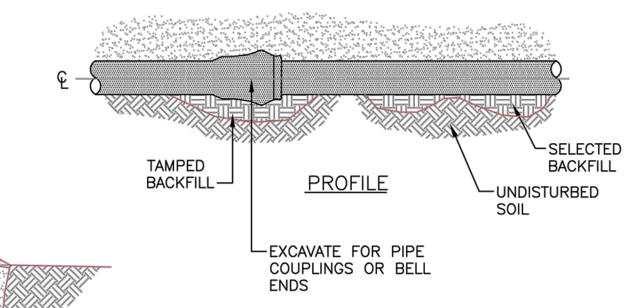

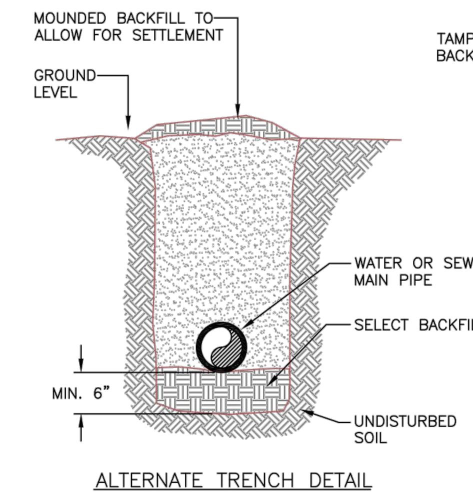

SHEET 2 OF 2

DESIGNED BY: NTUA; SURVEYED BY: –; DRAFTED BY: NTUA; APPROVED BY: NTUA; DATE: 08/2017; PROJECT NO. –; SCALE: NTS; ACAD FILENAME: 2017 NTUA Std. Dtls. for Water.dwg; DETAIL NO. WS-15

NAVAJO TRIBAL UTILITY AUTHORITY
ENGINEERING & CONSTRUCTION OPERATIONS DIVISION
STANDARD TRENCH DETAIL
NTUA HEADQUARTERS FT.DEFIANCE, AZ

No.	Date	Brief	By
01	04/08	Revised	L.H.
02	08/17	2017 Update	A.S.

39

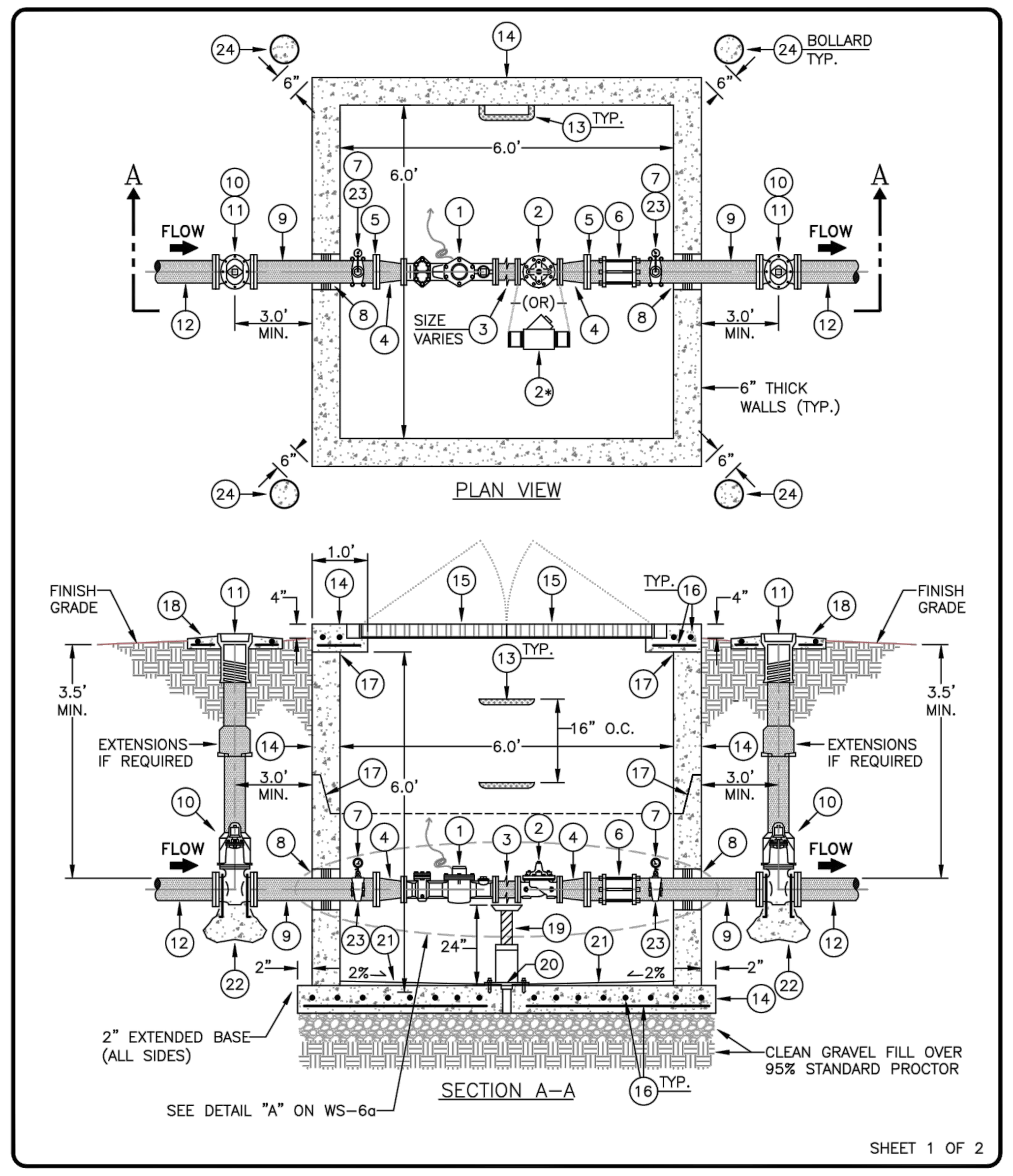

SHEET 1 OF 2

DESIGNED BY: NTUA; SURVEYED BY: –; DRAFTED BY: NTUA; APPROVED BY: NTUA; DATE: 08/2017; PROJECT NO. –; SCALE: NTS; ACAD FILENAME: 2017 NTUA Std. Dtls. for Water.dwg; DETAIL NO. WS-6

NAVAJO TRIBAL UTILITY AUTHORITY
ENGINEERING & CONSTRUCTION OPERATIONS DIVISION
3"TURBINE METER W/ 3" P.R.V.
NTUA HEADQUARTERS FT.DEFIANCE, AZ

No.	Date	Brief	By
01	04/08	Revised	L.H.
02	08/17	2017 Update	A.S.

25

3" TURBINE METER W/ 3" P.R.V.

MATERIAL LIST

ITEM	QTY	DESCRIPTION
1	1	3" ELSTER TS4000 TURBINE METER, FLANGED, GALLONS, W/ E.A. WATER MODULE (AMI)
2	1	3" CLA–VAL, PRESSURE REDUCING VALVE, FLANGED, 90 SERIES W/ OPTIONS A, B, C, D, & V. IF LINE PRESSURE IS 80 PSI OR LESS, INSTALL 3" BRASS CHECK VALVE
3	A.R.	3" DUCTILE IRON (D.I.) SPOOL PIECE, CLASS 350 (LENGTH VARIES PER METER SIZE)
4	2	4" x 3" D.I. REDUCER, CLASS 350, FLANGED
5	2	4" D.I. 'E–Z' FLANGED ADAPTER, CLASS 350
6	1	4" DRESSER COUPLING (6" LONG FOR D.I. PIPE)
7	4	PRESSURE GAUGE W/ 1/4" BRASS SHUTOFF VALVE (GLYCERIN)
8	2	VAULT BORE DONUTS, 8" W/ 4" HOLE
9	A.R.	4" D.I. PIPE, CLASS 350, PLAIN END, CUT AS NEEDED
10	2	4" GATE VALVE, M.J., RESILIENT SEAT, FLANGED, N.R.S., R.H.T., W/ 2" OPERATING NUT
11	2	VALVE BOX, 2–PIECE SCREW TYPE, 5–1/4" SHAFT W/ CAST IRON DROP LID
12	–	EXISTING 4" WATER MAIN LINE
13	A.R.	PLASTIC COATED STEEL OR ALUMINUM STEP @ 16" O.C., INSTALL TO 12" ABOVE VAULT FLOOR
14	1	6' x 6' x 6' (INT. DIM.) PRECAST CONCRETE VAULT (4,000 PSI MIN.), 6" THICK WALLS W/ 6" THICK REINFORCED CONCRETE TOP (8" THICK FOR TRAFFIC RATING) AND 6" REINFORCED CONCRETE BASE
15	1	5' x 5' SQ., INSULATED, DOUBLE DOOR COVER AND SAFETY GRATE, ALUMINUM CHANNEL FRAME W/ HANDLE SLAM LOCK AND COVERED PADLOCK CLIP
16	A.R.	#4 REBAR, E.W.O.C.
17	A.R.	VAULT JOINTS TO BE SEALED WITH BITUMASTIC OR GASKET
18	1	24" x 24" x 4" CONCRETE COLLAR W/ #4 REBAR, E.W., INDICATE PIPE SIZE & FLOW DIRECTION
19	A.R.	ADJUSTABLE METAL PIPE SUPPORT
20	1	2" FLOOR DRAIN W/ SCREEN, DRAIN TO 5" CLEAN GRAVEL (ADJUST PER FIELD CONDITIONS)
21	A.R.	CEMENT, NON–SHRINK GROUT, SLOPE FINISH @ 2% (0.02%) TOWARD VAULT DRAIN
22	A.R.	CONCRETE ANCHOR BLOCK PER NTUA STD. DTL. WS–19 & WS–19a
23	2	2" D.I. DOUBLE STRAP W/ 2" x 3/4" BUSHING AND 3/4" x 1/4" BUSING FOR PRESSURE GAGE
24	4	6" DIA. BOLLARDS AT 6" MIN. FROM VAULT CORNERS PER MAG. STD. 140, TYPE 1

GENERAL NOTES:
1. PROVIDE ADEQUATE CLEARANCE BETWEEN FLANGE BOLTS AND VAULT WALLS FOR MAINTENANCE.
2. GATE VALVES TO BE SUPPORTED ON 95% STANDARD PROCTOR.
3. ALL PIPES AND FITTINGS 4" OR LESS TO BE STAINLESS STEEL.
4. E.A. = EA_WATER MODULE (ENERGY.AXIS MANAGEMENT SYSTEM) FOR AMI.
5. HEX HEAD BOLTS/NUTS TO BE STAINLESS STEEL, TYPE 18–8.
6. A.R. = AS REQUIRED.

DETAIL "A"

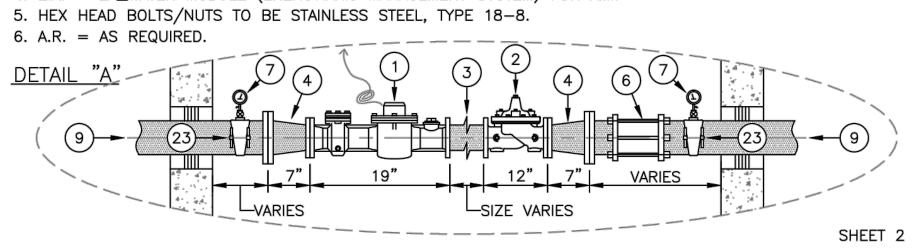

SHEET 2 OF 2

DESIGNED BY: NTUA; SURVEYED BY: –; DRAFTED BY: NTUA; APPROVED BY: NTUA; DATE: 08/2017; PROJECT NO. –; SCALE: NTS; ACAD FILENAME: 2017 NTUA Std. Dtls. for Water.dwg; DETAIL NO. WS-6a

NAVAJO TRIBAL UTILITY AUTHORITY
ENGINEERING & CONSTRUCTION OPERATIONS DIVISION
MATERIAL LIST: 3" TURBINE METER W/ 3" P.R.V.
NTUA HEADQUARTERS FT.DEFIANCE, AZ

No.	Date	Brief	By
01	04/08	Revised	L.H.
02	08/17	2017 Update	A.S.

26

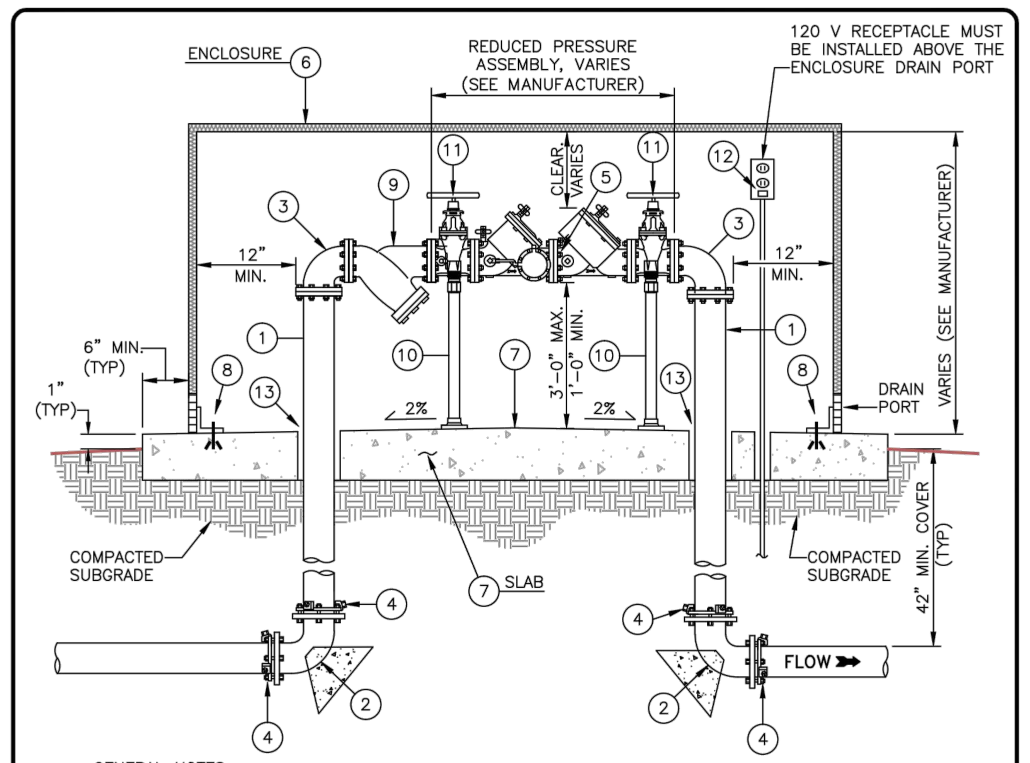

GENERAL NOTES:
1. REDUCED PRESSURE PRINCIPLE BACKFLOW PREVENTION ASSEMBLY SHALL COMPLY WITH ASSE 1013, AWWA C511 & USC–FCCCHR.
2. NO WATERLINE CONNECTIONS ARE ALLOWED BETWEEN THE METER AND BACKFLOW PREVENTION ASSEMBLY.
3. BACKFLOW PREVENTION ASSEMBLY SHALL BE INSTALLED WITHIN 5–FT OF THE METER BOX.
4. BACKFLOW PREVENTION ASSEMBLY SHALL BE CENTERED ON CONCRETE PAD AND COVERED WITH AN ENCLOSURE.
5. MINIMUM HEATED & INSULATED CLASS I, ASSE 1030 WEATHERPROOF ENCLOSURE REQUIRED.
6. PROTECT PIPES & BACKFLOW PREVENTION ASSEMBLY FROM FREEZING WITH INSULATION AND HEATING SOURCE.
7. STANDARD 120V GFCI ELECTRICAL RECEPTACLE TO BE INSTALLED IN ACCORDANCE WITH THE NATIONAL ELECTRICAL CODE FOR OUTDOOR AND DAMP ENCLOSURE OPERATION.
8. PIPE MATERIAL SHALL BE CLASS 150 DIP OR BETTER.
9. INSTALLATION SHALL BE IN COMPLIANCE WITH ALL APPLICABLE SPECIFICATIONS.
10. PROPERTY OWNER SHALL BE RESPONSIBLE FOR MAINTENANCE AND OPERATION OF BACKFLOW PREVENTION ASSEMBLY AND COMPLIANCE WITH REPORTING AND TESTING REQUIREMENTS.
11. MINIMUM 24" CLEARANCE FROM WALL ON THE TEST PORTS SIDE OF THE ASSEMBLY FOR TESTING.
12. CLEARANCE FOR TOP OF ENCLSURE TO ASSEMBLY VARIES PER ASSEMBLY MODEL AND ENCLOSURE MANUFACTURER.

SHEET 1 OF 2

DESIGNED BY: NTUA; SURVEYED BY: –; DRAFTED BY: NTUA; APPROVED BY: NTUA; DATE: 08/2017; PROJECT NO. –; SCALE: NTS; ACAD FILENAME: 2017 NTUA Std. Dtls. for Water.dwg; DETAIL NO. WS-26

NAVAJO TRIBAL UTILITY AUTHORITY
ENGINEERING & CONSTRUCTION OPERATIONS DIVISION
3" & LARGER OUTDOOR, REDUCED PRESSURE PRINCIPLE BACKFLOW PREVENTION ASSEMBLY
NTUA HEADQUARTERS FT.DEFIANCE, AZ

No.	Date	Brief	By
01	01/10	2010 Addition	A.S.
02	08/17	2017 Update	A.S.

56

3" & LARGER OUTDOOR, REDUCED PRESSURE PRINCIPLE BACKFLOW PREVENTION ASSEMBLY

MATERIAL LIST

ITEM	QTY	DESCRIPTION
1	A.R.	CLASS 150 DIP PIPE
2	2	CLASS 350 DIP MJ 90 DEGREE ELBOWS W/ CONCRETE THRUST BLOCK
3	2	CLASS 350 DIP MJ 90 DEGREE ELBOWS
4	A.R.	LOCKING TYPE RETAINER GLAND / MEGA LUGS
5	1	BACKFLOW PREVENTION ASSEMBLY, REDUCED PRESSURE PRINCIPLE
6	1	CLASS I, ASSE 1060 HEATED & INSULATED WEATHERPROOF ENCLOSURE W/ DRAIN OUTLETS, ANCHORED TO CONCRETE MOUNTING PAD
7	1	6" – 3,000 PSI CONCRETE MOUNTING PAD, DIMENSIONS PER ENCLOSURE MANUFACTURER SPECIFICATION
8	A.R.	ANCHOR SYSTEM FOR ENCLOSURE (HARDWARE)
9	1	CAST IRON WYE STRAINER (FLANGED), WILKINS MODEL 'FS' SERIES, OAE (OPTIONAL)
10	2	ADJUSTABLE PIPE SUPPORT
11	2	APPROVED 6" NRS GATE VALVE, NON–RISING STEM
12	1	GFCI ELECTRICAL RECEPTACLE
13	A.R.	MINIMUM 1" ANNULAR AREA AROUND PIPE & ELECTRICAL CONDUIT W/ PIPE SLEEVE

GENERAL NOTES:
1. A.R. = AS REQUIRED
2. OAE = OR APPROVED EQUAL

SHEET 2 OF 2

DESIGNED BY: NTUA; SURVEYED BY: –; DRAFTED BY: NTUA; APPROVED BY: NTUA; DATE: 08/2017; PROJECT NO. –; SCALE: NTS; ACAD FILENAME: 2017 NTUA Std. Dtls. for Water.dwg; DETAIL NO. WS-26a

NAVAJO TRIBAL UTILITY AUTHORITY
ENGINEERING & CONSTRUCTION OPERATIONS DIVISION
MATERIAL LIST: 3" & LARGER OUTDOOR, REDUCED PRESSURE PRINCIPLE
NTUA HEADQUARTERS FT.DEFIANCE, AZ

No.	Date	Brief	By
01	01/10	2010 Addition	A.S.
02	08/17	2017 Update	A.S.

57

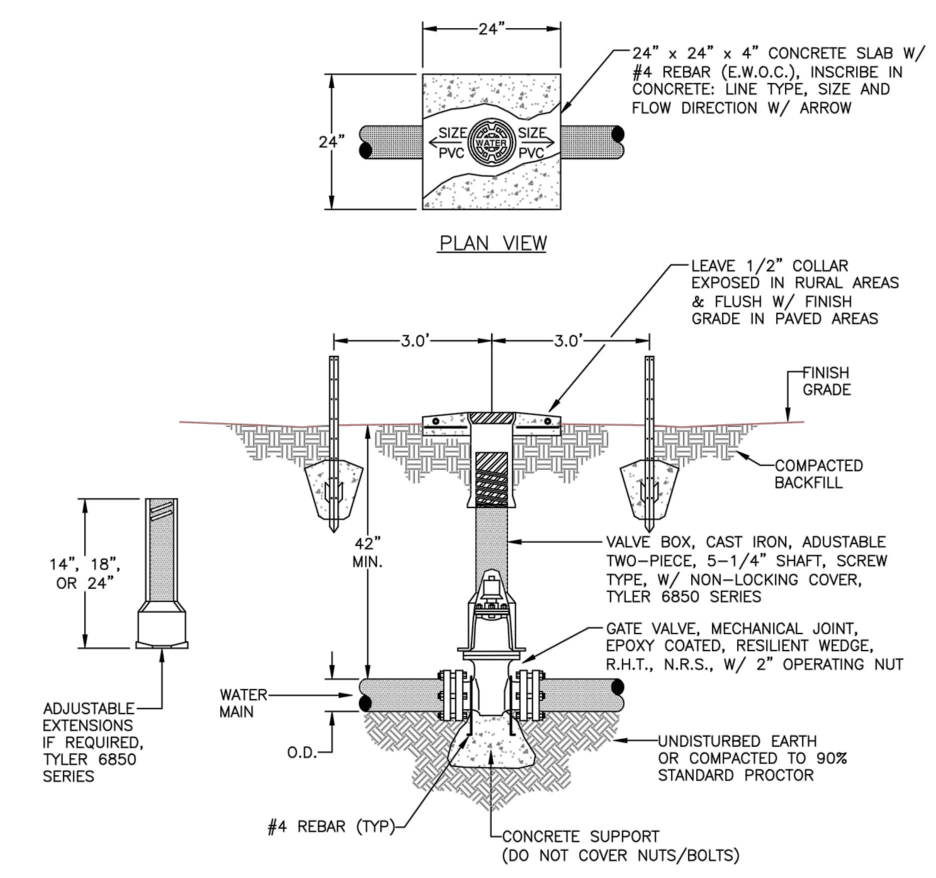

GENERAL NOTES:
1. USE SERIES 2000, PV MEGALUG GLANDS TO SECURE GATE VALVE(S) TO SDR–21, PVC PIPE.
2. USE SERIES 1100 MEGALUG GLANDS TO SECURE GATE VALVE(S) TO DUCTILE IRON PIPE.
3. DO NOT COVER JOINTS AND BOLTS WITH CONCRETE.
4. SEE WS–13 FOR APPROPRIATE LOCATIONS OF MARKER POST.
5. INSTALL #4 REBARS TO THE GATE VALVE & CONCRETE ANCHOR BLOCK.

DESIGNED BY: NTUA; SURVEYED BY: –; DRAFTED BY: NTUA; APPROVED BY: NTUA; DATE: 08/2017; PROJECT NO. –; SCALE: NTS; ACAD FILENAME: 2017 NTUA Std. Dtls. for Water.dwg; DETAIL NO. WS-14

NAVAJO TRIBAL UTILITY AUTHORITY
ENGINEERING & CONSTRUCTION OPERATIONS DIVISION
WATER MAINLINE GATE VALVE INSTALLATION
NTUA HEADQUARTERS FT.DEFIANCE, AZ

No.	Date	Brief	By
01	04/08	Revised	L.H.
02	08/17	2017 Update	A.S.

38

HOZHO ENGINEERING, LLC
2733 E. Lakin Dr.
Suite 2
Flagstaff, AZ 86004
ph: (928) 779-0420
www.hozho-eng.com

STAMP

ALTON L. WILLIAMS NEW MEXICO 22081 PROFESSIONAL ENGINEER 11/03/23

DYRON MURPHY ARCHITECTS, P.C.
4505 Montbel Place NE, Albuquerque, New Mexico 87107

SHIPROCK PINNACLE HOTEL & RESTAURANT

SHIPROCK, NEW MEXICO

100% CONSTRUCTION DOCUMENTS

ISSUED FOR CONSTRUCTION

NOVEMBER 3, 2023

PROJECT NUMBER	DRAWN BY	PROJ MGR
23009	HOZHO	AW

WATER DETAILS

Sheet Title

Sheet Number of

C811

10/25/2023 3:33:59 PM N:\Projects\2023\23009 Shiprock Pinnacle Hotel\DWG\23009-C8XX-DT.dwg
DYRON MURPHY ARCHITECTS, P.C.

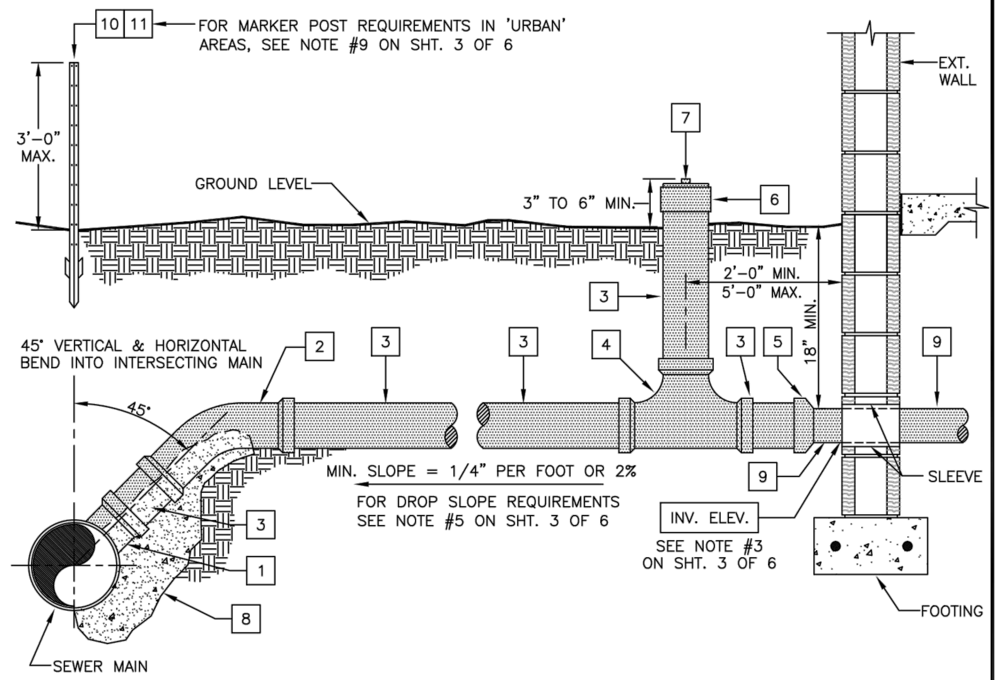

NOTE: NTUA DOES NOT MAINTAIN SEWER SERVICE LINES. MAINTENANCE WILL BE THE OWNER'S RESPONSIBILITY.

AS-BUILT LOCATION OF TAP	
PROJECT NAME	
PROJECT NO.	
SHEET NO.	
LINE NO.	
STATION NO.	
INV. ELEVATION	
RELATED W.O. NO'S.	

DETAIL INDEX	SHEET
4" STANDARD SEWER SERVICE LINE	1 of 6
MATERIAL LIST	2 of 6
GENERAL NOTES FOR SEWER SERVICE	3 of 6
PROPOSED INDIVIDUAL INSTALLATION	4 of 6
INDIVIDUAL AS-BUILT	5 of 6
VICINITY LOCATION OF NEW SERVICE	6 of 6

SHEET 1 OF 6

DESIGNED BY: NTUA | SURVEYED BY: - | DRAFTED BY: NTUA | APPROVED BY: NTUA | DATE: 3/08 | PROJECT NO. - | SCALE: NTS | ACAD FILENAME: WasteWater Standards.dwg | DETAIL NO. WWS-1

NAVAJO TRIBAL UTILITY AUTHORITY
CIVIL ENGINEERING DEPARTMENT
4" STANDARD SEWER SERVICE LINE
E&TS HEADQUARTERS FT.DEFIANCE, AZ

REVISIONS			
No.	Date	Brief	By
01	03/08	Revised	L.H.
02	03/16	2016 Update	A.S.
03			
04			
05			
06			

3

4" STANDARD SEWER SERVICE LINE		
#		MATERIAL LIST
ITEM	QTY	DESCRIPTION
1	1	45° WYE OR SADDLE, 4" SDR-35, PVC x APPROPRIATE PIPE TYPE & O.D.
2	1	4" x 45° ELBOW, SDR-35, PVC, GASKET x GASKET
3	A.R.	4" PIPE, SDR-35, PVC, INTEGRAL BELL W/ ELASTOMERIC GASKET (FT.)
4	1	4" TWO-WAY CLEANOUT, PVC-DWV, ALL HUB, ASTM D-2665 W/ SINGLE RISER
5	1	ADAPTER, REDUCING, 4" SDR-35, PVC, ASTM D-3034 x 3" PVC-DWV, ASTM D-2665
6	1	4" ADAPTER, HUB x FIPT, PVC-DWV, ASTM D-2665, SOLVENT WELD
7	1	4" PLUG, CLEAN OUT, MIPT, PVC-DWV, ASTM D-2665
8	A.R.	CONCRETE, PRE-MIX, (FIELD DETERMINE AS REQUIRED FOR PIPE SUPPORT)
9	1	HOUSE STUB-OUT, APPROPRIATE PIPE TYPE & O.D. (INSTALLED BY OTHERS)
10	A.R.	STEEL TEE POST, PAINTED GREEN OR GREEN CARSONITE MARKER POST W/ "SEWERLINE WARNING" DECAL
11	A.R.	"NTUA SEWERLINE WARNING" DECAL FOR CARSONITE POST ONLY (FOR ITEM #10)

GENERAL NOTES:

1. A.R. = AS REQUIRED
2. ITEM #9 IS DONE BY THE HOME OWNER.
3. CARSONITE DECAL TO BE AFFIXED TO ITEM #10.
4. FOR ITEM #10 SEE GENERAL NOTES FOR SEWER SERVICE #9 ON SHEET 3 OF 6.

SHEET 2 OF 6

DESIGNED BY: NTUA | SURVEYED BY: - | DRAFTED BY: NTUA | APPROVED BY: NTUA | DATE: 3/08 | PROJECT NO. - | SCALE: NTS | ACAD FILENAME: WasteWater Standards.dwg | DETAIL NO. WWS-1a

NAVAJO TRIBAL UTILITY AUTHORITY
CIVIL ENGINEERING DEPARTMENT
MATERIAL LIST: 4" STANDARD SEWER SERVICE LINE
E&TS HEADQUARTERS FT.DEFIANCE, AZ

REVISIONS			
No.	Date	Brief	By
01	03/08	Revised	L.H.
02	03/16	2016 Update	A.S.
03			
04			
05			
06			

4

GENERAL NOTES:

1. PROVIDE 10 FT. MINIMUM HORIZONTAL SEPARATION IN SEPARATE TRENCHES BETWEEN THE WATER AND SEWER SERVICES. PROVIDE 5 FT. MIN. HORIZONTAL SEPARATION BETWEEN THE SEWER SERVICE AND OTHER UTILITIES. IF SEWER SERVICE CROSSES OTHER SERVICES, SEE N.T.U.A CROSSING POLICY OR CONTACT N.T.U.A. HEADQUARTERS ENGINEERING.
2. SEWER CLEANOUTS ARE REQUIRED ON ALL BENDS IN EXCESS OF 45° AS PER PLUMBING CODE ADOPTED BY THE NAVAJO NATION. MODIFY MATERIAL LIST ACCORDINGLY AFTER CONSULTING WITH N.T.U.A. HEADQUARTERS ENGINEERING.
3. ADDITIONAL SEWER CLEANOUTS ARE REQUIRED ON SEWER SERVICES LONGER THAN 50 FT. AS PER UNIFORM PLUMBING CODE ADOPTED BY THE NAVAJO NATION. MODIFY MATERIAL LIST ACCORDINGLY AFTER CONSULTING WITH N.T.U.A. HEADQUARTERS ENGINEERING. EACH ADDITIONAL CLEANOUT IS AT THE CUSTOMERS EXPENSE INSTALL AT LEAST ONE CLEANOUT AS REQUIRED BY NOTE 2. IF CUSTOMER REQUEST FEWER AND REALIZES THIS VIOLATES NAVAJO TRIBAL CODE, THEN INSTALL PER THE CUSTOMER'S REQUEST AND SO NOTE ON THE INDIVIDUAL AS-BUILT, N.T.U.A. RECOMMENDS THAT CLEANOUTS BE SPACED NO MORE THAN 100'.
4. PROVIDE PROPOSED ELEVATION AT WALL. PROVIDE 6 IN. DIAMETER SLEEVE IF PIPING PENETRATES WALL OR 4 IN. DEPTH OF SAND BETWEEN FOOTING AND TOP OF PIPING IS BELOW THE FOOTING. ORDER ASTM D-1785 SCH. 40 PIPE WITH LENGTH AS NEEDED FOR THE SLEEVE. CONTACT N.T.U.A. HEADQUARTERS ENGINEERING ON PIPING SMALLER THAN 2 IN. IN SIZE.
5. STATE THE EXISTING PIPE TYPE AND O.D. (e.g. ASTM D-3034, SDR 35, PVC, 8. 40"). SADDLE IS TO HAVE A GASKET SEAL OR O-RING AND NON-CORRODIBLE STRAP SECURING SYSTEM.
6. MINIMUM SLOPE OF 1/4 INCH PER FOOT (2%) OR CONTACT N.T.U.A. HEADQUARTERS ENGINEERING.
7. BACKFILL IS TO BE HAND TAMPED (NO-MECHANICAL) AND COMPACTED IN 6 INCH LAYERS FOR AT LEAST 12 IN. ABOVE PVC PIPE. INSTALL PER ASTM D-2321 AND UNIFORM PLUMBING CODE ADOPTED BY THE NAVAJO NATION.
8. PROVIDE THE AS-BUILT AND SWING TIES FOR THE TAP POINT.
9. THE MATERIAL LIST SHALL BE MODIFIED IF A FIELD MARKER OF THE TAP POINT IS TO BE INSTALLED. UNDER THE AS-BUILT TIE INFORMATION. PROVIDE THE SURFACE DESCRIPTION OF THE TAP POINT (e.g. OPEN FIELD, PAVED ROAD, etc)
10. REFER TO BUILDING'S PLUMBING PLANS FOR ITEM 9. ITEM 5 MUST BE COMPATIBLE WITH ITEM 3 AND ITEM 9. IN THE MATERIALS LIST, ITEM 9 NEEDS TO BE COMPLETED AND ITEM 5 MODIFIED AS REQUIRED.
11. ORDER CONCRETE AS NEEDED. THE CONCRETE MAY BE ELIMINATED IF N.T.U.A. DISTRICT WATER FOREMAN AND ENGINEER DETERMINE FIELD CONDITIONS DO NOT REQUIRE THIS FOR ADEQUATE COMPACTION AND 4 IN. PIPE STRUCTURAL SUPPORT. MARK THE AS-BUILT DRAWING TO SHOW WHEN THE CONCRETE IS NOT USED.
12. FOR MULTIPLE BENDS, A CLEANOUT IS REQUIRED UPSTREAM FROM THE FIRST BEND THAT CAUSED THE CUMULATIVE ANGLE TO EXCEED 45°.

SHEET 3 OF 6

DESIGNED BY: NTUA | SURVEYED BY: | DRAWN BY: NTUA | APPROVED BY: NTUA | DATE: 3/08 | PROJECT NO. | SCALE: NTS | ACAD FILENAME: Waterwaste Standard | DWG. NO. WWS-1b

NAVAJO TRIBAL UTILITY AUTHORITY
GENERAL NOTES SEWER SERVICE
HQ-ENGINEERING FT.DEFIANCE, AZ

REVISIONS			
No.	Date	Brief	By
01	3/08	Revised	L.H.
02			
03			
04			
05			
06			

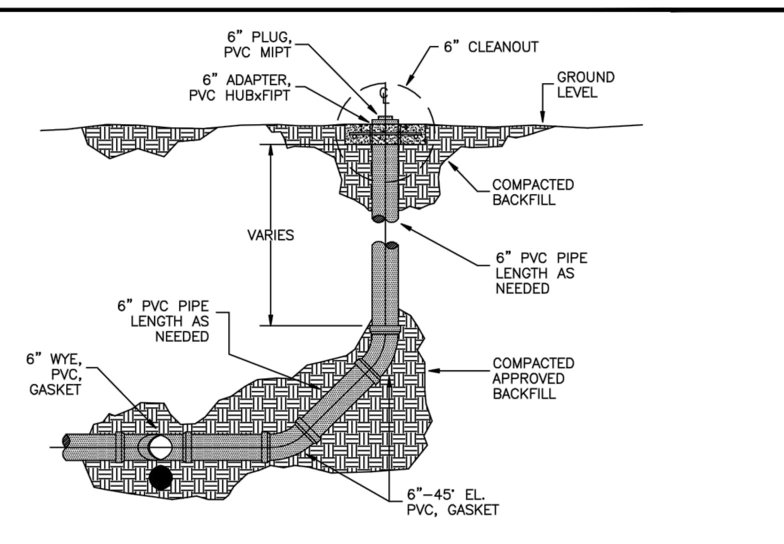

PROFILE VIEW

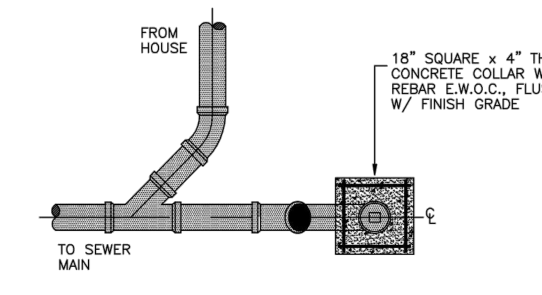

PLAN VIEW

NOTES:

1. 100 FT. MAX. BETWEEN CLEANOUTS.
2. CLEANOUT REQUIRED AT UPSTREAM OF ANY BEND IN EXCESS OF 45°.

DESIGNED BY: NTUA | SURVEYED BY: | DRAWN BY: NTUA | APPROVED BY: NTUA | DATE: 3/08 | PROJECT NO. | SCALE: NTS | ACAD FILENAME: Waterwaste Standard | DWG. NO. WWS-13

NAVAJO TRIBAL UTILITY AUTHORITY
6" SEWER CLEANOUT DETAIL
HQ-ENGINEERING FT.DEFIANCE, AZ

REVISIONS			
No.	Date	Brief	By
01	3/08	Revised	L.H.
02			
03			
04			
05			
06			

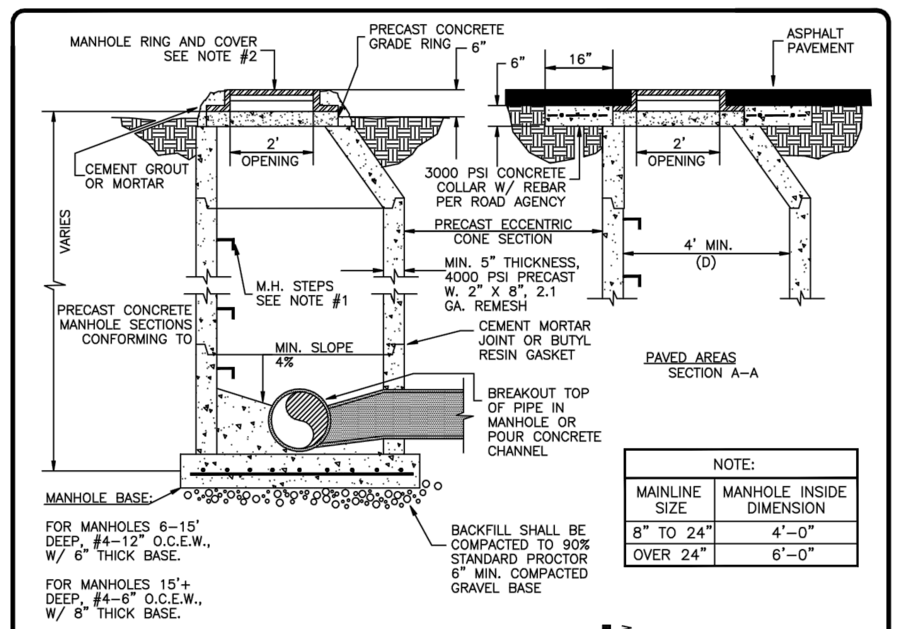

NOTE:	
MAINLINE SIZE	MANHOLE INSIDE DIMENSION
8" TO 24"	4'-0"
OVER 24"	6'-0"

FOR MANHOLES 6-15' DEEP, #4-12" O.C.E.W., W/ 6" THICK BASE.

FOR MANHOLES 15'+ DEEP, #4-6" O.C.E.W., W/ 8" THICK BASE.

RURAL UNPAVED AREAS SECTION A-A

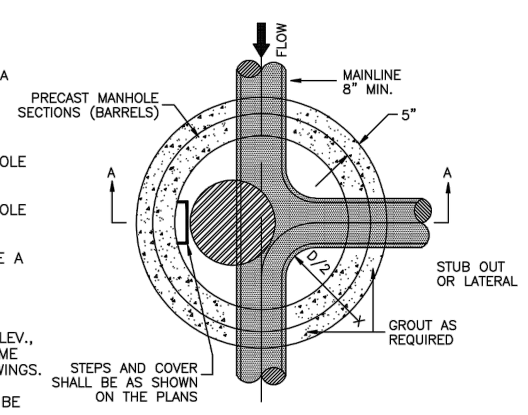

NOTES:

1. SEE STANDARD DRAWINGS OF MANHOLE STEPS, WWS-8
2. SEE STANDARD DRAWINGS OF MANHOLE RING AND COVER, WWS-7.
3. ALL CONCRETE CHANNELS SHALL BE A MIN. OF 3000 PSI RICH-MIX.
4. GROUT ALL LIFTING HOLES.
5. INVERT ELEV., OUTLET ELEV., RIM ELEV., & DROP ELEV. SHOULD BE THE SAME AS SHOWN ON CONSTRUCTION DRAWINGS.
6. ALL STRUCTURAL CONCRETE SHALL BE 4000 PSI.

DESIGNED BY: NTUA | SURVEYED BY: | DRAWN BY: NTUA | APPROVED BY: NTUA | DATE: 3/08 | PROJECT NO. | SCALE: NTS | ACAD FILENAME: Waterwaste Standard | DWG. NO. WWS-4

NAVAJO TRIBAL UTILITY AUTHORITY
STANDARD PRECAST SEWER MANHOLE DETAIL
HQ-ENGINEERING FT.DEFIANCE, AZ

REVISIONS			
No.	Date	Brief	By
01	3/08	Revised	L.H.
02			
03			
04			
05			
06			

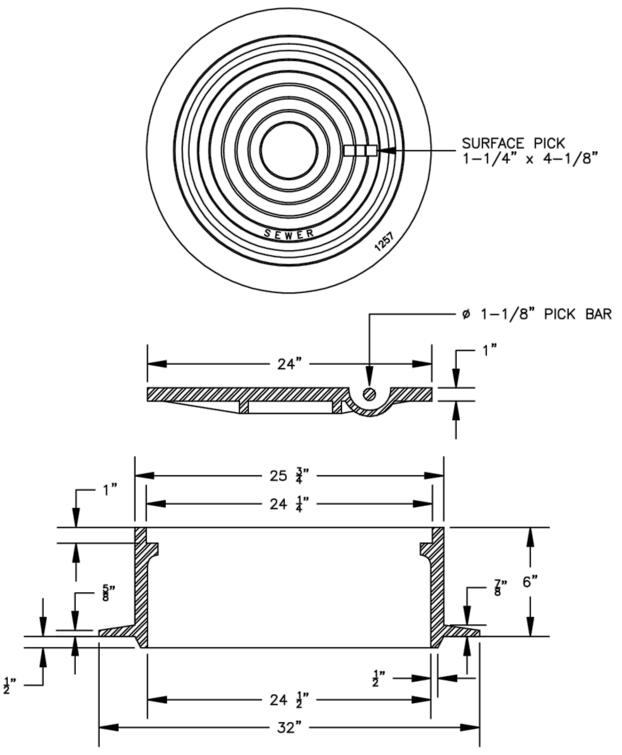

NOTES:

1. RING AND COVER SHALL BE CAST IRON (C.I.) ASTM A48-94A.
2. THE WORD "SEWER" SHALL BE CAST ON THE COVER.
3. C.I. MANHOLE RING AND COVER, HEAVY DUTY DEETER FOUNDRY, INC., MODEL #1257 W/ 1265 COPE.
4. TOTAL WEIGHT, 330 LBS.

DESIGNED BY: NTUA | SURVEYED BY: | DRAWN BY: NTUA | APPROVED BY: NTUA | DATE: 3/08 | PROJECT NO. | SCALE: NTS | ACAD FILENAME: Waterwaste Standard | DWG. NO. WWS-5

NAVAJO TRIBAL UTILITY AUTHORITY
STANDARD MANHOLE RING AND COVER
HQ-ENGINEERING FT.DEFIANCE, AZ

REVISIONS			
No.	Date	Brief	By
01	3/08	Revised	L.H.
02			
03			
04			
05			
06			

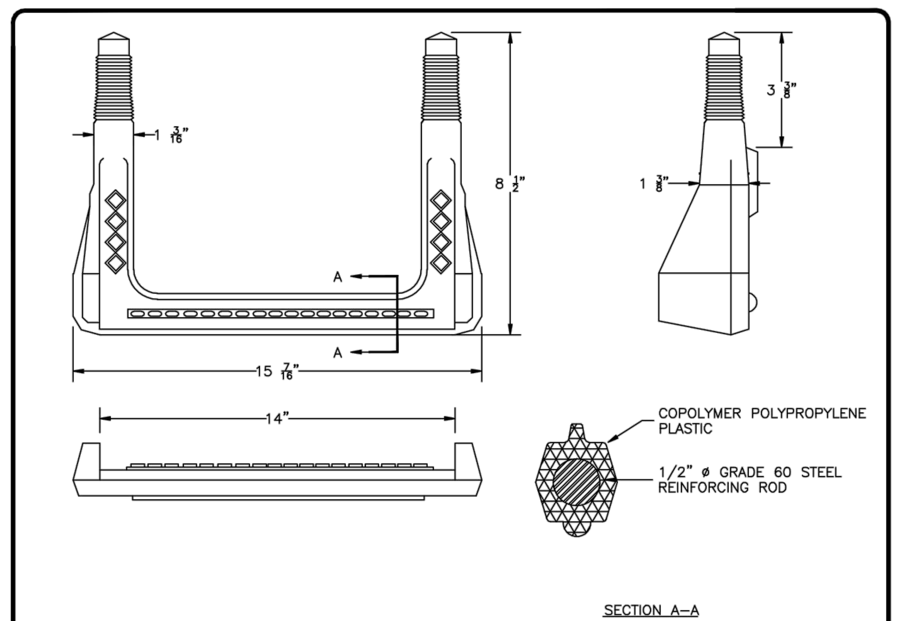

SECTION A-A

PLASTIC COATED STEP DETAIL

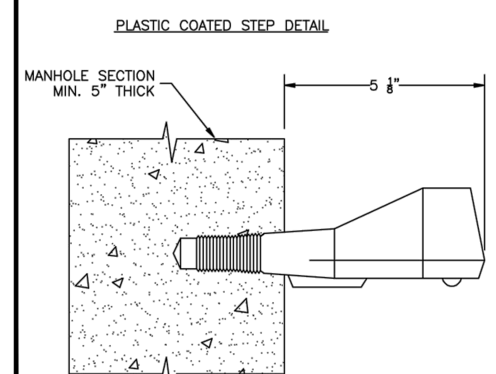

NOTES:

1. CONFORMS TO ASTM SPEC. C-478.
2. MAX. SPACING FOR STEPS ARE TO BE 16 IN. O.C., 18 IN. ABOVE CHANNEL AND 24 IN. BELOW RING AND COVER.
3. INSTALLATION SHALL BE ACCORDING TO MANUFACTURERS' INSTRUCTIONS (M.A. INDUSTRIES).
4. LOCATION OF MANHOLE STEPS SHALL BE PLACED IN ACCORDANCE WITH PLANS.

DESIGNED BY: NTUA | SURVEYED BY: | DRAWN BY: NTUA | APPROVED BY: NTUA | DATE: 3/08 | PROJECT NO. | SCALE: NTS | ACAD FILENAME: Waterwaste Standard | DWG. NO. WWS-6

NAVAJO TRIBAL UTILITY AUTHORITY
MANHOLE STEPS
HQ-ENGINEERING FT.DEFIANCE, AZ

REVISIONS			
No.	Date	Brief	By
01	3/08	Revised	L.H.
02			
03			
04			
05			
06			

HOZHO ENGINEERING, LLC
2733 E. Lakin Dr.
Suite 2
Flagstaff, AZ 86004
ph: (928) 779-0420
www.hozho-eng.com

STAMP

ALTON L. WILLIAMS
NEW MEXICO
22081
PROFESSIONAL ENGINEER
11/03/23

DYRON MURPHY ARCHITECTS, P.C.
4505 Montbel Place NE, Albuquerque, New Mexico 87107

SHIPROCK PINNACLE HOTEL & RESTAURANT

SHIPROCK, NEW MEXICO

100% CONSTRUCTION DOCUMENTS

ISSUED FOR CONSTRUCTION

NOVEMBER 3, 2023

PROJECT NUMBER	DRAWN BY	PROJ MGR
23009	HOZHO	AW

SEWER DETAILS

Sheet Title

Sheet Number of

C820

10/25/2023 3:33:59 PM N:\Projects\2023\23009 Shiprock Pinnacle Hotel\DWG\23009-C8XX-DT.dwg
DYRON MURPHY ARCHITECTS, P.C.

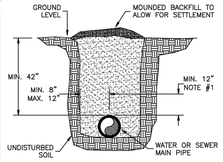

TYPICAL TRENCH DETAIL

NOTES:

1. HAND COMPACTED IN 6 IN. LIFTS FROM BOTTOM OF TRENCH TO 12 IN. ABOVE PIPE CROWN.
2. OPEN CUT OR PAVED OR GRAVEL ROADS (IF REQUIRED), BACK FILL MINIMUM COMPACTION 95% OPTIMUM DENSITY IN LIFTS.
3. REPAVING AND REGRAVELING WILL BE DONE TO ROAD OWNER'S REQUIREMENTS.
4. KEEP LOWER 5 FT. OF TRENCH WALL VERTICAL IF POSSIBLE. UPPER PART OF THE TRENCH WILL VARY IN WIDTH TO COMPENSATE FOR UNSTABLE SOIL. APPLICABLE O.S.H.A. REQUIREMENTS SHALL BE MET.

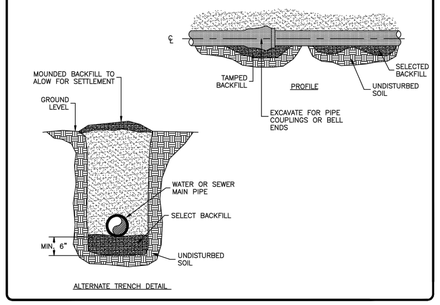

ALTERNATE TRENCH DETAIL

DESIGNED BY:	MTJA
DRAWN BY:	HOZHO
CHECKED BY:	MTJA
APPROVED BY:	MTJA
DATE:	3/08
SCALE:	NTS
CAD FILENAME:	Watermain Standard
DWG. NO.	WW2-10

NAVAJO TRIBAL UTILITY AUTHORITY
P.O. BOX 1689 FORT DEFIANCE, AZ

STANDARD TRENCH DETAIL

DIV-ENGINEERING FT.DEFIANCE, AZ

REVISIONS			
No.	Date	Brief Revised	By:
01	3/08		LJ.L.
02			
03			
04			
05			
06			

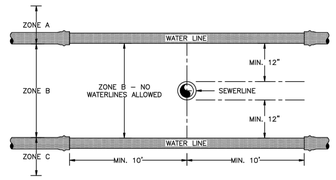

ZONE A – THE BOTTOM OF THE WATER LINE SHALL BE 12 IN. OR MORE ABOVE THE TOP OF THE SEWER LINE – NO SPECIAL PRECAUTIONS REQUIRED.

ZONE B – 12 FT. ABOVE AND 12 FT. BELOW SEWER LINE – NO WATER LINES ALLOWED.

ZONE C – THE TOP OF THE WATER LINE SHALL BE 12 IN. OR MORE BELOW THE BOTTOM OF THE SEWER LINE. IF THE SEWER LINE IS A NEWLY CONSTRUCTED SEWER LINE, AN 18 IN. LENGTH OF DUCTILE IRON SEWER PIPE W/ GASKETED JOINTS SHALL BE CENTERED OVER THE WATER LINE WITH NO JOINTS CLOSER THAN 9 FT. TO THE WATER LINE IN EACH DIRECTION. IF THE WATER LINE IS IN ZONE C AND THE WATER MAIN IS A NEWLY CONCTRUCTED WATER LINE, A 20 FT. LENGTH OF PVC WATER PIPE SHALL BE CENTERED UNDER THE SEWER LINE.

NOTES:

1. WHEN POSSIBLE, WATER LINES SHALL BE INSTALLED ABOVE SEWER LINES AND CROSSINGS SHALL BE AT 90° ANGLE(S).
2. WHEN WATER AND SEWER LINES ARE INSTALLED PARALLEL TO EACH OTHER, THE MINIMUM HORIZONTAL SEPARATION SHALL BE 10 FT.

DESIGNED BY:	MTJA
DRAWN BY:	HOZHO
CHECKED BY:	MTJA
APPROVED BY:	MTJA
DATE:	3/08
SCALE:	NTS
CAD FILENAME:	Watermain Standard
DWG. NO.	WW2-8

NAVAJO TRIBAL UTILITY AUTHORITY
P.O. BOX 1689 FORT DEFIANCE, AZ

WATER AND SEWER CROSSING SEPERATION

DIV-ENGINEERING FT.DEFIANCE, AZ

REVISIONS			
No.	Date	Brief Revised	By:
01	3/08		LJ.L.
02			
03			
04			
05			
06			

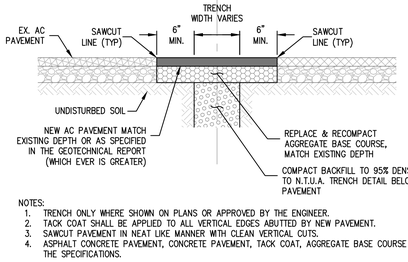

NOTES:

1. TRENCH ONLY WHERE SHOWN ON PLANS OR APPROVED BY THE ENGINEER.
2. TACK COAT SHALL BE APPLIED TO ALL VERTICAL EDGES ABUTTED BY NEW PAVEMENT.
3. SAWCUT PAVEMENT IN NEAT LIKE MANNER WITH CLEAN VERTICAL CUTS.
4. ASPHALT CONCRETE PAVEMENT, CONCRETE PAVEMENT, TACK COAT, AGGREGATE BASE COURSE SHALL CONFORM TO THE SPECIFICATIONS.

DETAIL A
ASPHALT PAVEMENT REPLACEMENT UTILITY TRENCH
NTS

HOZHO ENGINEERING, LLC
2733 E. Lakin Dr.
Suite 2
Flagstaff, AZ 86004
ph: (928) 779-0420
www.hozho-eng.com

STAMP

ALTON L. WILLIAMS
NEW MEXICO
22081
PROFESSIONAL ENGINEER
11/03/23

DYRON MURPHY ARCHITECTS, P.C.

4505 Montbel Place NE, Albuquerque, New Mexico 87107

SHIPROCK PINNACLE HOTEL & RESTAURANT

SHIPROCK, NEW MEXICO

100% CONSTRUCTION DOCUMENTS

ISSUED FOR CONSTRUCTION

NOVEMBER 3, 2023

PROJECT NUMBER	DRAWN BY	PROJ MGR
23009	HOZHO	AW

SEWER DETAILS

Sheet Title

Sheet Number

of

C821

N:\Projects\2023\23009 Shiprock Pinnacle Hotel\DWG\23009C001C7.dwg
11/03/2023 3:10:19 PM
DYRON MURPHY ARCHITECTS P.C.

A6 **LANDSCAPE PLAN**
1" = 20'-0"

GENERAL NOTES

1. THE ARCHITECT, OR HIS REPRESENTATIVE, RESERVE THE RIGHT TO REFUSE ANY PLANT MATERIALS HE DEEMS UNACCEPTABLE. (SEE SPECIFICATIONS)
2. FOR CLARIFICATION OF DISCREPANCIES BETWEEN THE DRAWINGS AND THE SITE, IT SHOULD BE BROUGHT TO THE ATTENTION OF THE LANDSCAPE ARCHITECT PRIOR TO BEGINNING WORK.
3. THE LANDSCAPE ARCHITECT IS TO APPROVE ANY AND ALL SUBSTITUTIONS.
4. PLANT LIST PROVIDED FOR CONTRACTOR'S CONVENIENCE ONLY. PLANS TAKE PRECEDENCE.
5. DOUBLE STAKE ALL 15 GALLON AND 24" BOX TREES AS REQUIRED.
6. EXPOSED SOIL IN PLANTERS SHALL BE RAKED AND FREE FROM ROCKS, ROOTS, WEEDS, ETC.
7. FINISHED GRADE IN GROUND COVER AND GRANITE AREAS SHALL BE 1" BELOW ADJACENT HEADER BOARD, PAVING, CURBING, ETC.
8. PLANTS SHALL BE QUALITY MATERIAL HAVING A GROWTH HABIT THAT IS NORMAL FOR THE SPECIES AND BE SOUND, VIGOROUS, HEALTHY, AND FREE FROM INSECTS AND INJURY.
9. GROUND COVER AND/OR DECOMPOSED GRANITE SHALL EXTEND UNDER SHRUBS UNLESS NOTED.
10. AFTER ALL WORK IS COMPLETED, THE CONTRACTOR SHALL REMOVE ALL MATERIALS NOT INCORPORATED IN THE SCOPE OF WORK FROM THE JOB SITE.
11. GRADING SHALL INCLUDE ALL EXCAVATION, SETTLEMENT, HANDLING, IMPORT, DISTRIBUTION, TRANSPORTATION, AND DISPOSAL NECESSARY TO BRING GROUND TO FINISH GRADE AS SHOWN ON THE CIVIL AND LANDSCAPE PLANS.
12. ALL EARTHWORK IS TO BE DONE SO THAT ALL WATER DRAINS AWAY FROM ALL STRUCTURES.
13. ALL UNDERGROUND CONDUITS AND UTILITIES ARE TO BE LOCATED BEFORE DIGGING. CALL NAVAJO TRIBAL UTILITY AUTHORITY AT 1-800-528-5011.
13. ALL PLANT MATERIAL TO BE GUARANTEED FOR A PERIOD OF EIGHTEEN (18) MONTHS AFTER FINAL ACCEPTANCE.
14. LANDSCAPE CONTRACTOR IS RESPONSIBLE FOR FINAL GRADING ON ALL LANDSCAPED AREAS.
15. BACKFILL PLANTING SOIL FOR ALL NATIVE SPECIES, CACTI AND SUCCULENTS TO BE EXISTING NATIVE SOIL. A PLANTING MIX OF 1/3 MULCH, 2/3 NATIVE SOIL MIXED THOROUGHLY IS TO BE USED AS PLANT BACKFILL FOR NON-NATIVE OR EXOTIC SPECIES.
17. IN THE EVENT OF MAJOR DISCREPANCIES BETWEEN THE PLANS AND FIELD CONDITIONS, CONTRACTOR SHALL NOTIFY THE ARCHITECT IMMEDIATELY. ALLOW A MINIMUM OF FORTY-EIGHT (48) HOURS BETWEEN NOTIFICATION OF ARCHITECT AND PROCEEDING WITH CONSTRUCTION OF IRRIGATION SYSTEM.
18. ALL FINISHED GRANITE AREAS ARE TO BE 1" BELOW ALL SIDEWALKS AND CURBS.
19. TEST DRAINAGE OF PLANT BEDS AND PITS BY FILLING WITH WATER. CONDITIONS PERMITTING THE RETENTION OF WATER IN LOCATIONS FOR MORE THAN TWENTY-FOUR (24) HOURS SHALL BE BROUGHT TO THE ATTENTION OF THE LA PRIOR TO ANY PLANTING.
20. CONTRACTOR IS RESPONSIBLE FOR PROVIDING SLEEVES TO ALL LANDSCAPE AREAS REGARDLESS WHETHER THEY ARE SHOWN ON PLANS OR NOT. REFER TO SLEEVING SCHEDULE FOR SIZE AND QUANTITY. IF DOUBT OR DISCREPANCY EXISTS REQUEST CLARIFICATION FROM ARCHITECT IN WRITING.
21. REFER TO SPECIFICATIONS FOR PLANTS THAT ARE CONSIDERED TO BE INVASIVE AND SHOULD NOT BE UTILIZED ON THIS PROJECT.

LANDSCAPE LEGEND

Supply and install the following plant material. Landscape designer to field verify location prior to planting. All plant material to meet A.N.A. specifications and be of sound health and appearance

TREES	SIZE	QTY
Quercus buckleyi Texas Red Oak	Standard 36" Box	
Gleditsia triacanthos inermis 'Shademaster' Honey Locust	Standard 24" Box	
Forestiera neomexicana New Mexico Privet	Multi 24" Box	
Celtis reticulata Netleaf Hackberry	Standard 24" Box	
Cercis canadensis v. Texensis Texas Redbud	Standard 24" Box	
Juniperus monosperma One Seed Juniper	Standard 15 Gallon	
Fraxinus velutina Arizona Ash	Standard 24" Box	

SHRUBS/ ACCENTS	SIZE
Atriplex canescens Fourwing Saltbrush	5 Gallon
Chrysothamnus nauseosus Rabbit Brush	5 Gallon
Perovskia atriplicifolia Russian Sage	5 Gallon
Fallugia paradoxa Apache Plume	5 Gallon
Ephedra nevadensis Mormon Tea	5 Gallon
Viguiera stenoloba Skeleton-leaf Goldeneye	5 Gallon
Dalea frutescens Black Indigobush	5 Gallon
Nassella tenuissima Mexican Feather Grass	1 Gallon
Melampodium leucanthum Blackfoot Daisy	1 Gallon
Aquilegia chrysantha Golden Columbine	1 Gallon
Penstemon pinifolius Pineleaf Penstemon	1 Gallon
Guara linheimeri Pink Guara	1 Gallon
Oenothera berlandieri Mexican Evening Primrose	1 Gallon
Tetraneuris Acaulis Angelita Daisy	1 Gallon
Gaillardia pinnatifida Blakeflower	1 Gallon
Yucca baileyi var. navajoa Navajo Soap Yucca	5 Gallon

GROUND COVER/ HARDSCAPE MATERIAL
Decomposed Granite - 3/4" Screened - Phoenix Rose or approved equal. 3" in planting areas as noted.

SEED MIX - A

Botanical Name	Common Name	lbs/acre
Artemisia ludoviciana	Silver Sage	1.0
Atiplex canescens	Fourwing Saltbush	1.0
Ericamerica nauseosa	Rubber Rabbitbrush	2.0
Dalea frutescens	Black Indigobush	1.0
Ephedra nevadensis	Mormon Tea	2.0
Fallugia paradox	Apache Plume	1.0
Gallaridia pinnatifida	Blanketflower	1.0
Garllarida pullchella	Firewheel	1.0
Guara linheimeri	Pink Guara	1.0
Melampodium leucanthum	Blackfoot Daisy	1.0
Oenothera berlandieri	Mexican Evening Primrose	1.0
Sphaeralcea ambigua	Globemallow	2.0
Cover Crop		
Triticum aestivium x secale cereal	Quickguard Sterile Triticale	8.0
	Total lbs/acre	23.0

STAMP

STATE OF NEW MEXICO
DYRON V. MURPHY
No. 3713
11/3/2023
REGISTERED ARCHITECT

DYRON MURPHY ARCHITECTS, P.C.
4505 Montbel Place NE, Albuquerque, New Mexico 87107

SHIPROCK PINNACLE HOTEL & RESTAURANT

SHIPROCK, NEW MEXICO

100% CONSTRUCTION DOCUMENTS

ISSUED FOR CONSTRUCTION

NOVEMBER 3, 2023

PROJECT NUMBER	DRAWN BY	PROJ MGR
2022.10	DF	DM

LANDSCAPE PLAN

Sheet Title

Sheet Number of

L101

11/6/2023 9:15:56 AM C:\Revit Local\Shiprock Pinnacle_Site_R22_dbidbaum3_dm-architects_cxvn.rvt
DYRON MURPHY ARCHITECTS, P.C.

A6 **IRRIGATION PLAN**
1" = 20'-0"

GENERAL IRRIGATION NOTES

1. MAINTAIN IRRIGATION WITHOUT DISRUPTION TO ALL EXISTING PLANT MATERIAL AS NECESSARY. COORDINATE WITH GENERAL CONTRACTOR TO PREVENT DAMAGE TO PLANT MATERIAL CAUSED BY DAMAGE TO IRRIGATION CAUSED BY CONSTRUCTION.
2. IRRIGATION SYSTEM SHALL MEET ALL SPECIFICATIONS. IF CONFLICT ARISES BETWEEN SPECIFICATIONS AND DRAWINGS, SPECIFICATIONS SHALL PREVAIL. IF CONFLICT ARISES BETWEEN DETAILS AND NOTES, NOTES SHALL PREVAIL.
3. IRRIGATION PLANS ARE SCHEMATIC. CONTRACTOR IS RESPONSIBLE FOR LOCATING ALL LINES AND HEADS AWAY FROM OBSTRUCTIONS AND PREVENTING HAZARDOUS CONDITIONS CAUSED BY IRRIGATION.
4. LANDSCAPE CONTRACTOR SHALL COORDINATE ALL NECESSARY SLEEVING WITH GENERAL CONTRACTOR. LANDSCAPE CONTRACTOR IS RESPONSIBLE FOR ALL NECESSARY SLEEVING WHETHER SHOWN ON PLANS OR NOT. NO ADDITIONAL CHANGES FOR SLEEVING OR BORING WILL BE ALLOWED AFTER ACCEPTANCE OF BID.
5. ALL WATER USED FOR IRRIGATION PURPOSES WILL CONFORM TO THE NEW MEXICO GROUNDWATER CODE.
6. THE CONTRACTOR SHALL VERIFY THE EXISTING PRESSURE AND SHALL NOTIFY THE LANDSCAPE ARCHITECT OF ANY DISCREPANCY BEFORE CONTINUING WORK.

IRRIGATION LEGEND

- IRRIGATION MAINLINE - 1" U.N.O.
- M — WATER METER
- A — IRRIGATION CONTROLLER - RAINBIRD
- GATE VALVE - FEBCO BRASS BALL VALVE - LINE SIZE
- ELECTRICAL REMOTE CONTROL VALVE AND FILTER - VALVE - RAINBIRD PESB SERIES - FILTER - RAINBIRD RBY-100-150MX
- IRRIGATION SLEEVE - SCH. 40 PVC - 4" - U.N.O.
- TREE LATERAL - 3/4" CLASS 200 PVC - U.N.O.
- SHRUB LATERAL - 3/4" POLY - U.N.O.
- V5 — STATION NUMBER
- 1" — VALVE SIZE
- SHRUB — VALVE TYPE

SLEEVING SCHEDULE

6" MAINLINE
3" SUBMAIN TO REGULATOR
3" IRRIGATION WIRES
2" LATERAL LINES

PIPE SIZE SCHEDULE

PIPE SIZE:	FLOW:
1/2"	0-5
3/4"	6-10
1"	11-15
1-1/4"	16-25
1-1/2"	26-35
2"	36-60
2-1/2"	61-80
3"	81-120
4"	121-200

IRRIGATION VALVE SCHEDULE

VALVE	SIZE	TYPE-GPM
V1	1"	TREE
V2	1"	SHRUB
V3	1"	SHRUB
V4	1"	TREE
V5	1"	SHRUB
V6	1"	TREE

STAMP

STATE OF NEW MEXICO
DYRON V. MURPHY
No. 3713
11/3/2023
REGISTERED ARCHITECT

DYRON MURPHY ARCHITECTS, P.C.
4505 Montbel Place NE, Albuquerque, New Mexico 87107

SHIPROCK PINNACLE HOTEL & RESTAURANT

SHIPROCK, NEW MEXICO

100% CONSTRUCTION DOCUMENTS

ISSUED FOR CONSTRUCTION

NOVEMBER 3, 2023

PROJECT NUMBER	DRAWN BY	PROJ MGR
2022.10	Author	Designer

IRRIGATION PLAN

Sheet Title

Sheet Number of

L102

C:\Revit Local\Shiprock Pinnacle_Site_R22_dlebbusch_dm-architects_com.rvt
11/6/2023 9:16:45 AM
DYRON MURPHY ARCHITECTS, P.C.

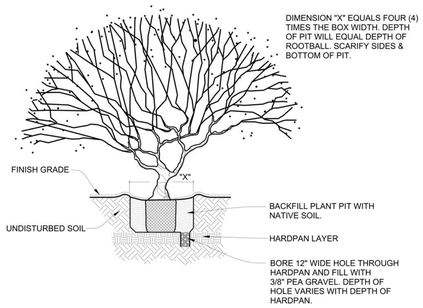

1 TREE PLANTING - HARDPAN
N.T.S.

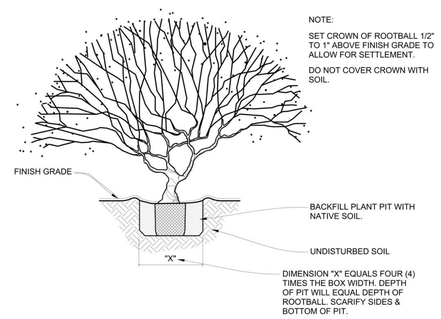

2 TREE PLANTING - 36" BOX AND LARGER
N.T.S.

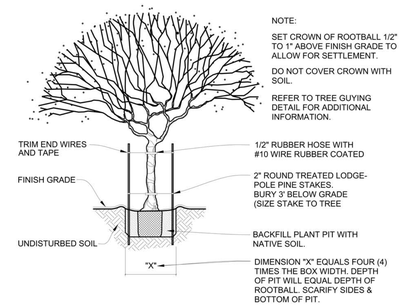

3 TREE PLANTING - 5 GAL TO 36" BOX (STAKING)
N.T.S.

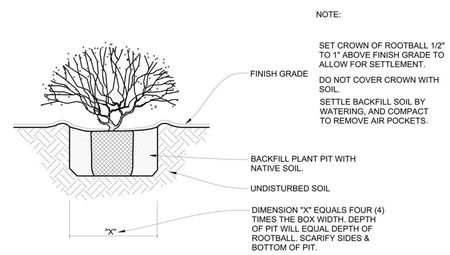

4 SHRUB PLANTING - 1 GAL TO 15 GAL
N.T.S.

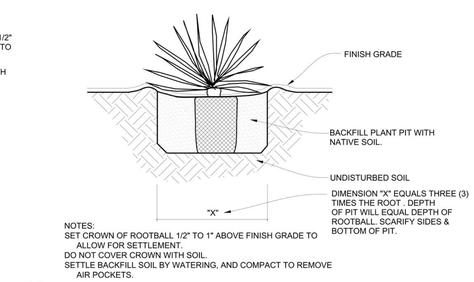

5 YUCCA / CACTUS PLANTING
N.T.S.

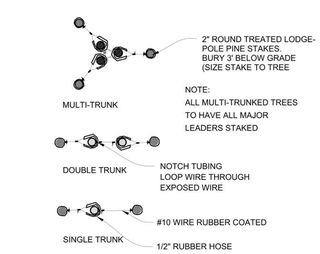

6 TREE GUYING DETAIL
N.T.S.

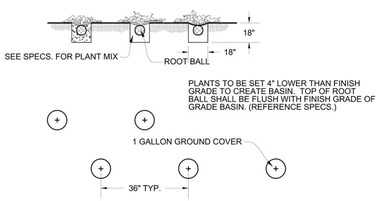

7 TYPICAL GROUNDCOVER INSTALLATION
N.T.S.

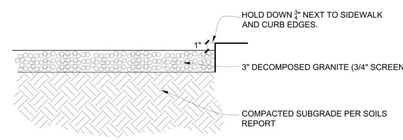

INSTALLATION:.

1. SUB-GRADE SHALL BE COMPACTED PRIOR TO PLACEMENT OF DECOMPOSED GRANITE.
2. SPREAD DECOMPOSED GRANITE OVER PREPARED SUB-BASE/BASE MATERIAL TO SPECIFIED DEPTH.

8 DECOMPOSED GRANITE
N.T.S.

STAMP

STATE OF NEW MEXICO
DYRON V. MURPHY
No. 3713
11/3/2023
REGISTERED ARCHITECT

DYRON MURPHY ARCHITECTS, P.C.
4505 Montbel Place NE, Albuquerque, New Mexico 87107

SHIPROCK PINNACLE HOTEL & RESTAURANT

SHIPROCK, NEW MEXICO

100% CONSTRUCTION DOCUMENTS

ISSUED FOR CONSTRUCTION

NOVEMBER 3, 2023

PROJECT NUMBER	DRAWN BY	PROJ MGR
2022.10	-	DM

DETAILS

Sheet Title

Sheet Number of

L103

11/6/2023 9:17:01 AM C:\Revit Local\Shiprock Pinnacle_Site_R23_jfeldbusch_dm-architects_cen.rvt
DYRON MURPHY ARCHITECTS, P.C.

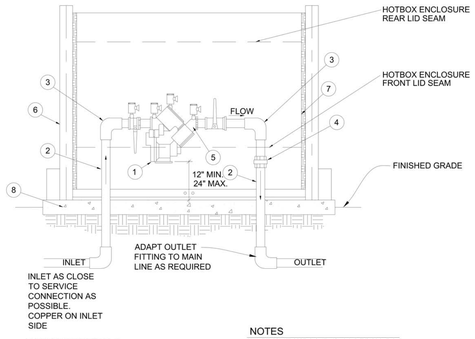

LIST OF MATERIALS

1. APPROVED REDUCED PRESSURE PRINCIPLE BACKFLOW PREVENTION ASSEMBLY, BALL VALVES INCLUDED.
2. PIPE SPOOL, TYPE "L" HARD COPPER, 3/4" THRU 2 1/2".
3. 90 ELL, COPPER, 3/4" THRU 2 1/2".
4. PIPE UNION, BRASS OR COPPER.
5. TEST COCKS WITH BRASS PLUGS INSTALLED. (4 REQUIRED)
6. HUBBELL HOTBOX HB3NS ENCLOSURE OR APPROVED EQUAL.
7. 1-1/2" FOAM INSULATION (TYP)
8. CONCRETE PAD: 6 INCH MIN. THICKNESS

NOTES

1. BACKFLOW PREVENTERS MUST BE TESTED BY A CERTIFIED TESTER BEFORE FINAL APPROVAL IS ISSUED.
2. COPPER FITTINGS SHALL BE CONNECTED WITH LEAD FREE SOLDER JOINTS.
3. FINISHED GRADE UNDERNEATH THE BACKFLOW PRE-VENTER SHALL BE AT 95 % COMPACTION.
4. ALL NIPPLES TO BE COPPER OR BRASS.
5. PIPING UNDER RIGHT OF WAY MUST BE TYPE "K" COPPER.
6. CALL FOR UNDERGROUND INSPECTION BEFORE BACKFILLING TRENCH.
7. PROTECT BACKFLOW PREVENTOR FROM FREEZING IN ACCORDANCE WITH NPC 312.6.

1 REDUCED PRESSURE BACKFLOW PREVENTER
N.T.S.

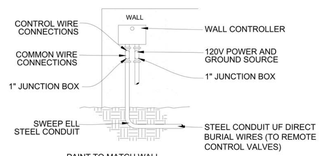

PAINT TO MATCH WALL

ALL WIRING TO BE INSTALLED PER LOCAL CODES
SEE MANUAL FOR MOUNTING INSTRUCTIONS

2 WALL MOUNTED CONTROLLER
N.T.S.

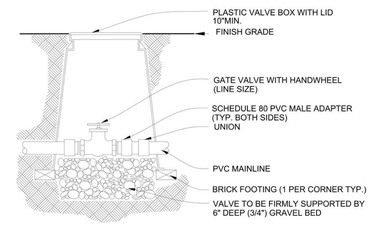

3 ISOLATION VALVE
N.T.S.

MINIMUM DEPTH SHOWN
FOR PIPE TYPE

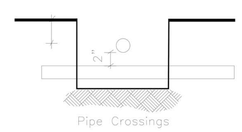

NOTES:

1. ALL MAINLINES TO BE INSTALLED IN ACCORDANCE W/ MANUFACTURER'S SPECIFICATIONS
2. TRENCH WIDTH & DEPTH TO VARY DEPENDING ON NUMBER & TYPES OF PIPES CONTAINED THERE IN.

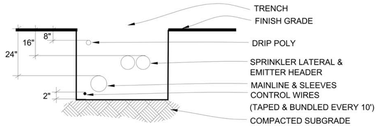

4 IRRIGATION TRENCHING DETAIL
N.T.S.

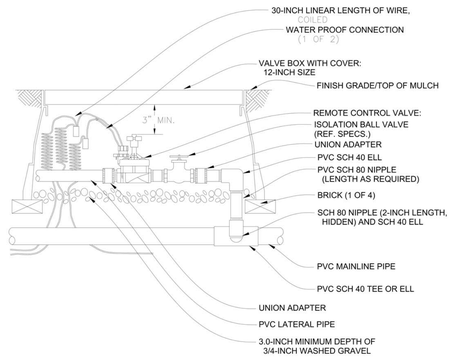

5 REMOTE CONTROL VALVE
N.T.S.

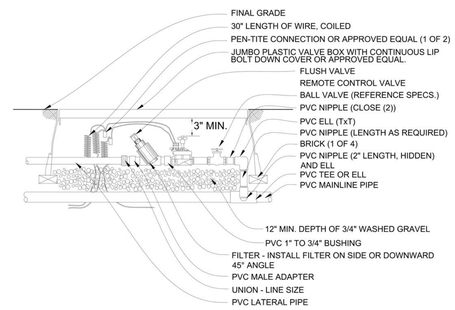

6 REMOTE CONTROL VALVE, PRESSURE REGULATOR & FILTER ASSEMBLY
N.T.S.

STAMP

DYRON MURPHY ARCHITECTS, P.C.

4505 Montbel Place NE, Albuquerque, New Mexico 87107

SHIPROCK PINNACLE HOTEL & RESTAURANT

SHIPROCK, NEW MEXICO

100% CONSTRUCTION DOCUMENTS

ISSUED FOR CONSTRUCTION

NOVEMBER 3, 2023

PROJECT NUMBER	DRAWN BY	PROJ MGR
2022.10	-	DM

DETAILS

Sheet Title

Sheet Number

of

L104

11/6/2023 9:17:19 AM C:\Revit Local\Shiprock Pinnacle_Site_R22_dbalbuch_dm-architects_cont.rvt
DYRON MURPHY ARCHITECTS, P.C.

STRUCTURAL GRAPHIC SYMBOLS

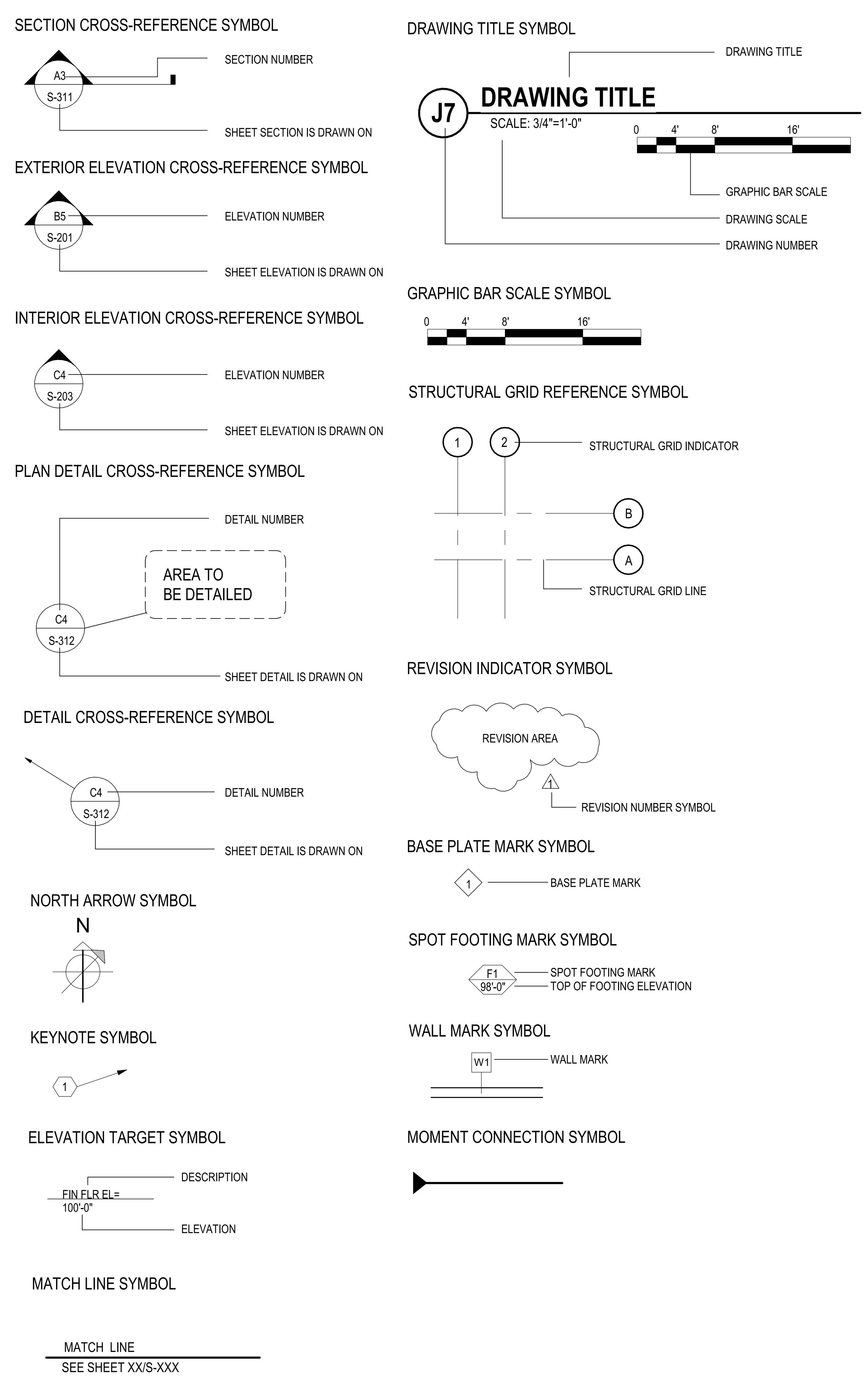

STRUCTURAL MATERIALS LEGEND

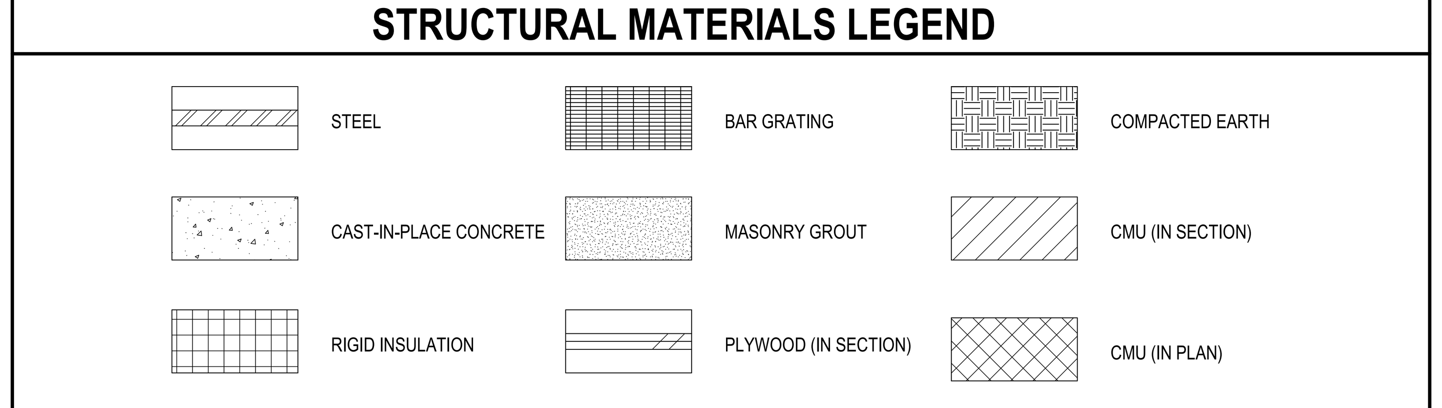

ABBREVIATIONS

A/E	ARCHITECT/ENGINEER
AB	ANCHOR BOLT
ABAN	ABANDON
ABBRV	ABBREVIATION
AC	ASPHALTIC CONCRETE
ACI	AMERICAN CONCRETE INSTITUTE
ACP	ASPHALTIC CONCRETE PAVING
ACR	ACROSS
ACST	ACOUSTIC
AD	AREA DRAIN
ADA	AMERICANS WITH DISABILITIES ACT
ADDL	ADDITIONAL
ADDM	ADDENDUM
ADJ	ADJACENT/ADJOINING
ADMIN	ADMINISTRATION
AFF	ABOVE FINISHED FLOOR
AFG	ABOVE FINISHED GRADE
AFS	ABOVE FINISHED SLAB
AGGR	AGGREGATE
AHR	ANCHOR
AIA	AMERICAN INSTITUTE OF ARCHITECTS
AISC	AMERICAN INSTITUTE OF STEEL CONSTRUCTION
AISI	AMERICAN IRON AND STEEL INSTITUTE
AITC	AMERICAN INSTITUTE OF TIMBER CONSTRUCTION
ALNMT	ALIGNMENT
ALT	ALTERNATE, ALTERNATIVE
ALUM	ALUMINUM
AMT	AMOUNT
ANSI	AMERICAN NATIONAL STANDARDS INSTITUTE
APA	AMERICAN PLYWOOD ASSOCIATION
APPD	APPROVED
APPROX	APPROXIMATE
APPX	APPENDIX
AR	AS REQUIRED
ARCH	ARCHITECT
ASCE	AMERICAN SOCIETY OF CIVIL ENGINEERS
ASPH	ASPHALT
ASI	ARCHITECT'S SUPPLEMENTAL INSTRUCTIONS
ASSN	ASSOCIATION
ASTM	AMERICAN SOCIETY FOR TESTING AND MATERIALS
ATCH	ATTACHMENT
ATTN	ATTENTION
AWS	AMERICAN WELDING SOCIETY
AZ	AZIMUTH
B&F	BELL AND FLANGE
BAL	BALANCE
B/B	BACK TO BACK
BC	BOTTOM CHORD
BD	BOARD
BDRY	BOUNDARY
BEV	BEVEL
BFF	BELOW FINISH FLOOR
BKG	BACKING
BKGD	BACKGROUND
BLD	BUILD
BLDG	BUILDING
BLK	BLOCK/BLOCKING
BLT	BUILT
BLVD	BOULEVARD
BLW	BELOW
BM	BEAM
BO	BOTTOM OF
BOS	BOTTOM OF STEEL
BOT	BOTTOM
B PL	BASE PLATE
BRCG	BRACING
BRDG	BRIDGING
BRG	BEARING
BRG PL	BEARING PLATE
BS	BOTH SIDES
BSMT	BASEMENT
BT WLD	BUTT WELD
BTWN	BETWEEN
C	CHANNEL
C/C	CENTER TO CENTER
CAM	CAMBER
CAN	CANOPY
CD	CONSTRUCTION DOCUMENTS, CONTRACT DOCUMENTS
CEM	CEMENT
CHFR	CHAMFER
CHKD	CHECKED/CHECKERED
CI	CAST IRON
CIP	CAST-IN-PLACE
CJ	CONSTRUCTION JOINT
CJ	CONTRACTION JOINT
CJ	CONTROL JOINT
CL	CENTER LINE
CLG	CEILING
CLR	CLEAR
cm	CENTIMETER
CMU	CONCRETE MASONRY UNIT
CO	COMPANY
COA	CITY OF ALBUQUERQUE
COL	COLUMN
COM	COMMON
CONC	CONCRETE
CONN	CONNECTION
CONSTR	CONSTRUCTION
CONT	CONTINUOUS , CONTINUE
CONTR	CONTRACTOR
COORD	COORDINATE
CRSI	CONCRETE REINFORCING STEEL INSTITUTE
CSI	CONSTRUCTION SPECIFICATIONS INSTITUTE
CTR	CENTER
CTRL	CONTROL
CU	CUBIC
CU YD	CUBIC YARD
D	DEEP, DEPTH
D-B	DESIGN-BUILD
DAT	DATUM
DBL	DOUBLE
DEG	DEGREE
DEL	DELETE
DEMO	DEMOLITION
DET	DETAIL
DEV	DEVELOPMENT
DFTG	DRAFTING
DIA	DIAMETER
DIAG	DIAGONAL
DIFF	DIFFERENCE, DIFFERENTIAL
DIM	DIMENSION
DIST	DISTANCE
DIV	DIVIDE
DJ	DOUBLE JOIST
DL	DEAD LOAD
DOC	DOCUMENT
DOUG FIR	DOUGLAS FIR
DSGN	DESIGN
DWG	DRAWING
DWL/DWLS	DOWELS
E	EAST, MODULUS OF ELASTICITY
EA	EACH
EE	EACH END
EF	EACH FACE
EIFS	EXTERIOR INSULATION AND FINISH SYSTEM
EJ	EXPANSION JOINT
EL	ELEVATION
ELAST	ELASTOMERIC
ELEC	ELECTRIC
ELEM	ELEMENTARY
ELEV	ELEVATOR
EMBED	EMBEDDED / EMBEDMENT
ENCL	ENCLOSURE
ENGR	ENGINEER
EOS	EDGE OF SLAB
EPA	ENVIRONMENTAL PROTECTION AGENCY
EQ	EQUAL
EQUIP	EQUIPMENT
EQUIV	EQUIVALENT
ESCAL	ESCALATOR
ESMT	EASEMENT
EST	ESTIMATE

ABBREVIATIONS

ETC	ET CETERA
EW	EACH WAY
EX	EXAMPLE
EXC	EXCAVATE
EXCL	EXCLUDE
EXIST	EXISTING
EXP	EXPANSION
EXT	EXTERIOR
F/F	FACE TO FACE
FAB	FABRIC
FACIL	FACILITY
FB	FLAT BAR
FD	FLOOR DRAIN
FDTN	FOUNDATION
FF	FAR FACE
FF EL	FINISH FLOOR ELEVATION
FIN GR	FINISH GRADE
FH	FLAT HEAD
FIN	FINISH
FIN FLR	FINISH FLOOR
FLG	FLANGE
FLR	FLOOR
FLR SK	FLOOR SINK
FOC	FACE OF CONCRETE
FOF	FACE OF FINISH
FOM	FACE OF MASONRY
FOS	FACE OF SLAB
FOS	FACE OF STUD
FOW	FACE OF WALL
FR	FRAME
FRMG	FRAMING
FS	FAR SIDE
FSTNR	FASTENER
FT	FOOT / FEET
FT/LB	FOOT/POUND
FT/LBF	FOOT/POUND FORCE
FTG	FOOTING
FUT	FUTURE
G	GIRDER
GA	GAGE
GALV	GALVANIZED
GALV STL	GALVANIZED STEEL
GR BM	GRADE BEAM
GC	GENERAL CONTRACTOR
GEN	GENERAL
GLU LAM	GLUED LAMINATED WOOD
GLZ	GLAZING
GOVT	GOVERNMENT
GRTG	GRATING
GT	GROUT
H	HIGH
HAS	HEADED ANCHOR STUD
HC	HOLLOW-CORE
HCP	HANDICAPPED
HD	HEAVY DUTY
HGR	HANGER
HLDN	HOLDDOWN
HORIZ	HORIZONTAL
HS	HIGH STRENGTH
HSKPG	HOUSEKEEPING
HSS	HOLLOW STRUCTURAL SECTIONS
HST	HOIST
HT	HEIGHT
IBC	INTERNATIONAL BUILDING CODE
ID	INSIDE DIAMETER
IF	INSIDE FACE
IFS	INSIDE FACE OF STUD
IN	INCH
INCL	INCLUDED
INFO	INFORMATION
IN-LB	INCH-POUND
IN-LBF	INCH-POUND FORCE
INSTL	INSTALL
INSUL	INSULATION
INT	INTERIOR
IR	INSIDE RADIUS
k	KIP
K	THOUSAND
KB	KNEE BRACE
KCJ	KEYED CONTROL JOINT
KIP	THOUSAND POUNDS
KIP FT	THOUSAND FOOT/POUNDS
KLF	KIPS PER LINEAL FOOT
KO	KNOCK OUT
KOP	KNOCK OUT PANEL
KSF	KIPS PER SQUARE FOOT
KSI	KIPS PER SQUARE INCH
L	ANGLE
LAM	LAMINATE
LATL	LATERAL
LBF	POUND-FORCE
LBR	LUMBER
LBS	POUND
LD BRG	LOAD BEARING
LF	LINEAR FEET (FOOT)
LIN	LINEAR
LL	LIVE LOAD
LLBB	LONG LEG BACK TO BACK
LLH	LONG LEG HORIZONTAL
LLV	LONG LEG VERTICAL
LONG	LONGITUDINAL
LT GA	LIGHT GAGE
LT WT	LIGHT WEIGHT
LVR	LOUVER
LWC	LIGHTWEIGHT CONCRETE
M	MOMENT
MAINT	MAINTENANCE
MATL	MATERIAL
MAX	MAXIMUM
MB	MACHINE BOLT
MC	MOMENT CONNECTION
MCJ	MASONRY CONTROL JOINT
MD	METAL DECK
ME	MECHANICAL ENGINEER
MECH	MECHANICAL
MEZZ	MEZZANINE
MFR	MANUFACTURER
MID	MIDDLE
MIN	MINIMUM
MISC	MISCELLANEOUS
ML	MICRO-LAMINATED
ML	MONOLITHIC
MO	MASONRY OPENING
MS	MACHINE SCREW
MSL	MEAN SEA LEVEL
MTL	METAL
N	NORTH
NA	NOT APPLICABLE
NF	NEAR FACE
NIC	NOT IN CONTRACT
NM	NEW MEXICO
NO	NUMBER
NOM	NOMINAL
NS	NEAR SIDE
NTS	NOT TO SCALE
O/O	OUT TO OUT
OA	OVERALL
OC	ON CENTER
OD	OUTSIDE DIAMETER
OF	OUTSIDE FACE
OFS	OUTSIDE FACE OF STUD
OPH	OPPOSITE HAND
OPNG	OPENING
OPP	OPPOSITE
OPT	OPTIONAL
OR	OUTSIDE RADIUS
PAR	PARALLEL, PARAPET
PART	PARTIAL
PC	PIECE, PORTLAND CEMENT
PCC	PRECAST CONCRETE
PCF	POUNDS PER CUBIC FOOT
PCI	PRECAST/PRESTRESSED CONCRETE INSTITUTE
PED	PEDESTAL
PEN	PENETRATE
PERIM	PERIMETER

ABBREVIATIONS

PERP	PERPENDICULAR
PH	PHASE
PIL	PILASTER
PL	PLATE
PLAT	PLATFORM
PLBG	PLUMBING
PLF	POUNDS PER LINEAR FOOT
PLM	PARALLAM
PLYWD	PLYWOOD
POS	POSITION
PP	PANEL POINT
PRCST	PRECAST
PREFAB	PREFABRICATE
PRELIM	PRELIMINARY
PREV	PREVIOUS
PSF	POUNDS PER SQUARE FOOT
PSI	POUNDS PER SQUARE INCH
PT	POST-TENSIONED
PT CONC	POST-TENSIONED CONCRETE
PTN	PARTITION
PVG	PAVING
QTY	QUANTITY
QUAD	QUADRANT
R	RADIUS, RISER
RC	REINFORCED CONCRETE
RD	ROAD, ROOF DRAIN
REC	RECESSED
REF	REFERENCE
REINF	REINFORCE/REINFORCEMENT
REPL	REPLACE
REQ	REQUIRE
REQD	REQUIRED
REV	REVISION
RGD INS	RIGID INSULATION
RFI	REQUEST FOR INFORMATION
RND	ROUND
RO	ROUGH OPENING
RT	RIGHT
RVL	REVEAL
S	SOUTH
SCHEM	SCHEMATIC
SCHED	SCHEDULE
SD	SHOP DRAWINGS
SDI	STEEL DECK INSTITUTE
SDL	SADDLE
SE	STRUCTURAL ENGINEER
SECT	SECTION
SF	SQUARE FEET (FOOT)
SHT	SHEET, SHAFT
SHTHG	SHEATHING
SIM	SIMILAR
SJI	STEEL JOIST INSTITUTE
SLNT	SEALANT
SM	SMOOTH
SP	SUMP PIT
SPA	SPACE/SPACES
SPEC	SPECIFICATION
SPRT	SUPPORT
SQ	SQUARE
SQ IN	SQUARE INCH
SQ YD	SQUARE YARD
SSPC	STRUCTURAL STEEL PAINTING COUNCIL
ST	STAIRS
STAG	STAGGERED
STD	STANDARD
STIF	STIFFENER
STIR	STIRRUP
STAG	STAGGERED
STD	STANDARD
STIF	STIFFENER
STIR	STIRRUP
STL	STEEL
STL LNTL	STEEL LINTEL
STL	JST STEEL JOIST
STL PL	STEEL PLATE
STL RF DK	STEEL ROOF DECK
STR	STRINGERS
STRUCT	STRUCTURAL
SUB	SUBSTITUTE
SUF	SUFFICIENT
SUP	SUPPLEMENTARY
SUPPL	SUPPLEMENT
SYM	SYMBOL
SYMM	SYMMETRICAL
SYS	SYSTEM
T	TREAD
T&B	TOP AND BOTTOM
T&G	TONGUE AND GROOVE
TAN	TANGENT
TB	THRU BOLT
TEMP	TEMPORARY
THD	THREAD
THK	THICKNESS
THRU	THROUGH
TJI	TRUSS JOIST INSTITUTE
TO	TOP OF
TOB	TOP OF BEAM
TOC	TOP OF CONCRETE
TOC FTG	TOP OF CONCRETE FOOTING
TOC WALL	TOP OF CONCRETE WALL
TOF	TOP OF FOOTING
TOG	TOP OF GRATE
TOJ	TOP OF JOIST
TOL	TOLERANCE
TOM	TOP OF MASONRY
TOP	TOP OF PARAPET
TOS	TOP OF SLAB
TOS	TOP OF STEEL
TOW	TOP OF WALL
TRANS	TRANSVERSE
TRNBKL	TURNBUCKLE
TYP	TYPICAL
UBC	UNIFORM BUILDING CODE
UNO	UNLESS NOTED OTHERWISE
VAR	VARIES
VERT	VERTICAL
VIF	VERIFY IN FIELD
VNR	VENEER
VR	VAPOR RETARDER
VRFY	VERIFY
W	WEST, WIDE
W/	WITH
W/O	WITHOUT
WBL	WOOD BLOCKING
WD	WOOD
WF	WIDE FLANGE
WF BM	WIDE FLANGE BEAM
WL	WIND LOAD
WLD	WELDED
WM	WIRE MESH
WP	WATERPROOFING
WSCT	WAINSCOT
WT	WEIGHT
WWF	WELDED WIRE FABRIC
WWM	WELDED WIRE MESH
X BRACE	CROSS BRACING
XXH	DOUBLE EXTRA HEAVY
YD	YARD

GENERAL FOUNDATION NOTES

GENERAL:

THE FOUNDATION NOTES INCLUDED HEREIN ARE A SUMMARY OF THE REQUIREMENTS OF THE PROJECT GEOTECHNICAL REPORT. THESE NOTES ARE PROVIDED FOR THE CONVENIENCE OF THE CONTRACTOR ONLY.

IF THERE ARE DISCREPANCIES BETWEEN THE FOUNDATION NOTES AND THE PROJECT GEOTECHNICAL REPORT, THE PROJECT GEOTECHNICAL REPORT SHALL GOVERN.

A SUBSURFACE GEOTECHNICAL INVESTIGATION HAS BEEN MADE BY GEOMAT, PROJECT NO. 232-4403.

A REPORT OF THAT INVESTIGATION DATED JULY 27, 2023 IS AVAILABLE FOR VIEWING AT THE OFFICE OF THE ARCHITECT.

THE FOUNDATION SYSTEM FOR THIS PROJECT IS SHALLOW FOUNDATIONS OVER GEOGRID STABILIZED FILL.

THE SLAB-ON-GRADE FOR THIS PROJECT WAS NOT DESIGNED AS A STRUCTURAL DIAPHRAGM.

ADDITIONAL INFORMATION CONCERNING THE SPECIFIC SITE SOIL CONDITIONS TO BE ENCOUNTERED ARE IN THE PROJECT GEOTECHNICAL REPORT AND SHALL BE REVIEWED AND FULLY UNDERSTOOD BY THE CONTRACTOR.

IF THERE ARE ANY QUESTIONS REGARDING THE REQUIREMENTS OF THE PROJECT GEOTECHNICAL REPORT, THE CONTRACTOR SHALL ISSUE RFI'S (REQUESTS FOR INFORMATION) TO THE ARCHITECT FOR CLARIFICATION. EARTHWORK SHALL NOT PROCEED UNTIL THE REQUIREMENTS OF THE PROJECT GEOTECHNICAL REPORT ARE FULLY UNDERSTOOD BY THE CONTRACTOR.

FIELD OBSERVATION AND TESTS:

THE CONTRACTOR SHALL EMPLOY THE SERVICES OF A REGISTERED, LICENSED GEOTECHNICAL ENGINEER TO OBSERVE ALL CONTROLLED EARTHWORK. THE GEOTECHNICAL ENGINEER SHALL PROVIDE CONTINUOUS ON-SITE OBSERVATION BY EXPERIENCED PERSONNEL DURING CONSTRUCTION OF CONTROLLED EARTHWORK. THE CONTRACTOR SHALL NOTIFY THE GEOTECHNICAL ENGINEER AT LEAST TWO WORKING DAYS IN ADVANCE OF ANY FIELD OPERATIONS OF THE CONTROLLED EARTHWORK.

TESTS OF MATERIALS SHALL BE MADE AT THE FOLLOWING MINIMUM RATES. THE ON-SITE GEOTECHNICAL ENGINEER SHALL DETERMINE THE ACTUAL TESTING RATES:

ONE FIELD DENSITY TEST PER 2500 SQUARE FEET OF COMPACTED SUBGRADE, PRIOR TO PLACING STRUCTURAL FILL OR SLAB-ON-GRADE, WITH A MINIMUM OF 3 TESTS.

ONE FIELD DENSITY TEST PER 2500 SQUARE FEET OF STRUCTURAL FILL PLACED OR PER EACH HORIZONTAL LAYER OF STRUCTURAL FILL, WHICHEVER IS THE GREATER NUMBER OF TESTS.

ONE MOISTURE-DENSITY CURVE FOR EACH TYPE OF MATERIAL USED, AS INDICATED BY THE SIEVE ANALYSIS AND THE PLASTICITY INDEX.

THE GEOTECHNICAL ENGINEER SHALL SUBMIT THE RESULTS OF ALL REQUIRED TESTS.

CLEARING AND GRUBBING:

STRIP AND REMOVE ALL EXISTING PAVEMENT, FILL, DEBRIS, AND OTHER DELETERIOUS MATERIALS FROM THE PROPOSED BUILDING AREA. ANY EXISTING STRUCTURES SHOULD BE COMPLETELY REMOVED FROM BELOW ANY BUILDING, INCLUDING FOUNDATION ELEMENTS AND ANY ASSOCIATED DEVELOPMENT SUCH AS UNDERGROUND UTILITIES, SEPTIC TANKS, ETC. ALL EXPOSED SURFACES BELOW FOOTINGS AND SLABS SHOULD BE FREE OF MOUNDS AND DEPRESSIONS WHICH COULD PREVENT UNIFORM COMPACTION.

IF UNEXPECTED FILLS OR UNDERGROUND FACILITIES ARE ENCOUNTERED DURING SITE CLEARING, THE GEOTECHNICAL ENGINEER SHOULD BE CONSULTED FOR FURTHER RECOMMENDATIONS.

VEGETATION AND ORGANIC MATERIAL SHALL BE REMOVED FROM THE SITE EXCEPT WHERE USED TO REVEGETATE EXPOSED SLOPES FOLLOWING GRADING, OR WHERE DISPOSED AWAY FROM THE BUILDING PAD AND STRUCTURAL FOUNDATIONS.

SITE, SUBFLOOR AND BEARING SURFACE PREPARATION:

A REPRESENTATIVE OF THE GEOTECHNICAL ENGINEER SHALL BE PRESENT TO CONFIRM COMPLETE EXCAVATION OF ANY UNCONTROLLED FILL.

THE ENTIRE BUILDING FOOTPRINT SHELL BE SUPPORTED ON TENSAR GEOGRID STABILIZED FILL CONSISTING OF TWO LAYERS OF TENSAR NXF GEOGRID WITH 12 INCHES OF COMPACTED BASE COURSE OVERLAYING EACH LAYER

SCARIFY ALL EXPOSED SUBGRADE SOILS TO A DEPTH OF 8 INCHES, MOISTEN TO OPTIMUM MOISTURE CONTENT (+/- 2%) AND COMPACT TO THE DENSITY SPECIFIED HEREINAFTER.

FLOOR SLAB ON GRADE SHALL BE PLACED OVER 4 INCHES OF AGGREGATE BASE COURSE FOLLOWED BY COMPACTED STRUCTURAL BELOW FILL TO A DEPTH AS REQUIRED OVER THE TENSAR GEOGRID PREPARED SOIL.

PLACE ALL STRUCTURAL FILL IN APPROXIMATELY HORIZONTAL LAYERS NOT GREATER THAN 8 INCHES IN LOOSE THICKNESS, MOISTEN TO OPTIMUM MOISTURE CONTENT (+/- 2%) AND COMPACT TO DENSITY SPECIFIED HEREINAFTER.

ALL EARTHWORK FOR THE BUILDING PAD SHALL EXTEND A MINIMUM OF 5 FEET BEYOND THE OUTSIDE EDGE OF THE PERIMETER FOOTINGS.

STRUCTURAL FILL REQUIREMENTS:

GRADATION (ASTM D422):

SIEVE SIZE	PERCENT PASSING BY WEIGHT
3"	100
NO. 4	50-100
NO. 200	50 MAX

PLASTICITY INDEX (ASTM D4318): 12 MAXIMUM

MATERIAL LARGER THAN 6 INCHES SHALL NOT BE PLACED IN THE STRUCTURAL FILL, AND MATERIAL LARGER THAN 4 INCHES SHALL NOT BE PLACED WITHIN TWELVE INCHES OF THE BEARING SURFACES OF SLABS OR FOUNDATIONS.

NO BRUSH, SOD, FROZEN MATERIAL OR OTHER UNSUITABLE MATERIAL SHALL BE PLACED IN THE STRUCTURAL FILL. MATERIAL SHALL BE PLACED IN SUCH A MANNER AS TO RESULT IN A UNIFORMLY COMPACTED FILL.

BASED ON THE REQUIREMENTS FOR THE STRUCTURAL FILL AND THE DESCRIPTION OF THE EXISTING SITE SOILS IN THE PROJECT GEOTECHNICAL REPORT, THE CONTRACTOR IS RESPONSIBLE FOR DETERMINING THE MOST APPROPRIATE METHOD FOR PROVIDING THE REQUIRED STRUCTURAL FILL. DEPENDING ON THE SITE CONDITIONS, APPROPRIATE METHODS COULD INCLUDE REBLENDING OF THE EXISTING SITE SOILS, MIXING THE EXISTING SITE SOILS WITH IMPORTED FILL, OR REMOVING THE EXISTING SITE SOILS ENTIRELY AND REPLACING WITH IMPORTED FILL.

GRANULAR BASE COURSE REQUIREMENTS:

GRADATION (ASTM C136):

SIEVE SIZE	PERCENT PASSING BY WEIGHT
1"	100
3/4"	85-100
NO. 4	45-95
NO. 200	0-8

PLASTICITY INDEX (ASTM D4318): 3 MAXIMUM

THE COURSE AGGREGATE SHALL HAVE A PERCENT WEAR OF 50 OR LESS WHEN TESTED IN ACCORDANCE WITH ASTM C131.

COMPACTION REQUIREMENTS:

IN ACCORDANCE WITH ASTM D1557 (MODIFIED PROCTOR), SUBGRADE SOILS AND STRUCTURAL FILL MATERIALS SHALL BE COMPACTED TO THE FOLLOWING PERCENTAGES OF THE MAXIMUM DRY DENSITY AT +/- 2% OPTIMUM MOISTURE CONTENT:

MATERIAL	MINIMUM PERCENT COMPACTION
STRUCTURAL FILL IN THE BUILDING AREA	95
SUBBASE FOR SLAB SUPPORT	95
SUBGRADE BELOW STRUCTURAL FILL	95
MISCELLANEOUS BACKFILL	90

SITE RETAINING WALL DESIGN CRITERIA:

LOADING CONDITION	EQUIVALENT FLUID PRESSURE
ACTIVE EARTH PRESSURE	35 PCF
PASSIVE EARTH PRESSURE	250 PCF
EARTH PRESSURE AT REST	50 PCF
SOIL FRICTION FACTOR	0.4 (0.3 WITH PASSIVE PRESSURE)
SOIL BEARING CAPACITY	3000 PSF

Chavez-Grieves
consulting engineers, inc.
4700 Lincoln Road NE, Suite 102 • Albuquerque, NM 87109
505-344-4080 • 505-343-8759 fax

STAMP

BENJAMIN L. BURKHARD
NEW MEXICO
26142
PROFESSIONAL ENGINEER
11/03/2023
EXP: 12/31/2024

DYRON MURPHY ARCHITECTS, P.C.
4505 Montbel Place NE, Albuquerque, New Mexico 87107

SHIPROCK PINNACLE HOTEL & RESTAURANT

SHIPROCK, NEW MEXICO

100% CONSTRUCTION DOCUMENTS

ISSUED FOR CONSTRUCTION

NOVEMBER 03, 2023

PROJECT NUMBER	DRAWN BY	PROJ MGR
2022.10	ML/KB	BB/MG

ABBREVIATIONS AND LEGEND

Sheet Title

Sheet Number of

S-001

GENERAL STRUCTURAL NOTES

CODES AND MANUALS:

IBC-15 INTERNATIONAL BUILDING CODE 2015
ASCE/SEI 7-10 MINIMUM DESIGN LOADS FOR BUILDINGS AND OTHER STRUCTURES
AISC 360-10 SPECIFICATION FOR STRUCTURAL STEEL BUILDINGS
AISC 341-10 SEISMIC PROVISIONS FOR STRUCTURAL STEEL BUILDINGS
AISC MANUAL OF STEEL CONSTRUCTION 14TH EDITION
SDI DIAPHRAGM DESIGN MANUAL, 3RD EDITION
ANSI/SDI RD1.0-06 STANDARD FOR STEEL ROOF DECK
AISI S100-12 NORTH AMERICAN SPECIFICATION FOR THE DESIGN OF COLD-FORMED STEEL STRUCTURAL MEMBERS
AISI S200-12 NORTH AMERICAN STANDARD FOR COLD-FORMED STEEL FRAMING – GENERAL PROVISIONS
AISI S211-07 NORTH AMERICAN STANDARD FOR COLD-FORMED STEEL FRAMING – WALL STUD DESIGN WITH 2012 SUPPLEMENT
AISI S212-12 NORTH AMERICAN STANDARD FOR COLD-FORMED STEEL FRAMING – HEADER DESIGN
MBMA METAL BUILDING SYSTEMS MANUAL, 2007 EDITION
ACI 318-14 BUILDING CODE REQUIREMENTS FOR STRUCTURAL CONCRETE
ACI 530-13 BUILDING CODE REQUIREMENTS FOR MASONRY STRUCTURES
ACI 530.1-13 SPECIFICATIONS FOR MASONRY STRUCTURES
NDS-15 NATIONAL DESIGN SPECIFICATION FOR WOOD CONSTRUCTION WITH 2015 SUPPLEMENT
AWS D1.1-10 STRUCTURAL WELDING CODE – STEEL
AWS D1.3-08 STRUCTURAL WELDING CODE – SHEET STEEL
AWS D1.4-11 STRUCTURAL WELDING CODE – REINFORCING STEEL

DESIGN CRITERIA:

VERTICAL:

LIVE LOAD	
FLOOR	40 PSF
STAIRS AND EXIT-WAYS*	100 PSF
*MINIMUM CONCENTRATED LOAD	300 LBS
ADDITIONAL SUPERIMPOSED LOADS	
PARTITIONS	15 PSF
SUSPENDED EQUIPMENT	10 PSF
CONCENTRATED LOAD	2000 LBS
(PER IBC 1607.4)	
ROOF LIVE LOAD: LR = 20*R1*R2	20 PSF
REDUCTION FACTOR BASED ON TRIB AREA	R1=1.0
REDUCTION FACTOR BASED ON ROOF SLOPE	R2=1.0
SNOW LOAD	
GROUND SNOW LOAD	PG=5 PSF
FLAT ROOF SNOW LOAD**	PF=10 PSF
SNOW EXPOSURE FACTOR	CE=1.0
SNOW LOAD IMPORTANCE FACTOR	IS=1.0
THERMAL FACTOR	CT=1.0
**INCLUDES 5 PSF RAIN-ON SNOW SURCHARGE LOAD	

HORIZONTAL (HOTEL):

WIND	
ULTIMATE DESIGN WIND SPEED	115 MPH
RISK CATEGORY	II
EXPOSURE	C
INTERNAL PRESSURE COEFFICIENT	GCPI=0.18
SEISMIC	
SEISMIC IMPORTANCE FACTOR	IE = 1.0
MAPPED SPECTRAL RESPONSE ACCELERATIONS	
SHORT PERIOD	SS=0.140G
1 SECOND PERIOD	S1=0.039G
SITE CLASS	D
SPECTRAL RESPONSE COEFFICIENTS	
SHORT PERIOD	SDS=0.149G
1 SECOND PERIOD	SD1=0.062G
SEISMIC DESIGN CATEGORY	B
BASIC SEISMIC FORCE RESISTING SYSTEM:	
BUILDING WALL SYSTEM – LIGHT FRAMES WOOD WALLS WITH WOOD SHEATHING	
SEISMIC RESPONSE COEFFICIENT	CS=0.023
RESPONSE MODIFICATION FACTOR	R = 6.5
DESIGN BASE SHEAR	V = 0.023W
ANALYSIS PROCEDURE:	
EQUIVALENT LATERAL FORCE	
BASIC SEISMIC FORCE RESISTING SYSTEM (PORTE COCHERE):	
ORDINARY CANTILEVERED COLUMNS	
SEISMIC RESPONSE COEFFICIENT:	CS = 0.099
RESPONSE MODIFICATION FACTOR:	R = 1.5
DESIGN BASE SHEAR:	V = 0.099W
ANALYSIS PROCEDURE:	
EQUIVALENT LATERAL FORCE	

HORIZONTAL (RESTAURANT):

WIND	
ULTIMATE DESIGN WIND SPEED	115 MPH
RISK CATEGORY	II
EXPOSURE	C
INTERNAL PRESSURE COEFFICIENT	GCPI=0.18
STRUCTURE IS RIGID	
SEISMIC	
SEISMIC IMPORTANCE FACTOR	IE = 1.0
MAPPED SPECTRAL RESPONSE ACCELERATIONS	
SHORT PERIOD	SS=0.140G
1 SECOND PERIOD	S1=0.039G
SITE CLASS	D
SPECTRAL RESPONSE COEFFICIENTS	
SHORT PERIOD	SDS=0.149G
1 SECOND PERIOD	SD1=0.062G
SEISMIC DESIGN CATEGORY	B
BASIC SEISMIC FORCE RESISTING SYSTEM:	
BUILDING WALL SYSTEM – LIGHT FRAMES WOOD WALLS WITH WOOD SHEATHING	
SEISMIC RESPONSE COEFFICIENT	CS=0.023
RESPONSE MODIFICATION FACTOR	R = 6.5
DESIGN BASE SHEAR	V = 0.023W
ANALYSIS PROCEDURE:	
EQUIVALENT LATERAL FORCE	

ALLOWABLE SOIL BEARING PRESSURE = 3000 PSF

FROST DEPTH = 30 INCHES

FUTURE BUILDING EXPANSION: NONE

GENERAL:

STRUCTURAL DRAWINGS ARE NOT STAND-ALONE DOCUMENTS AND ARE INTENDED TO BE USED IN CONJUNCTION WITH CIVIL, ARCHITECTURAL, MECHANICAL, ELECTRICAL, AND DRAWINGS FROM OTHER DISCIPLINES. THE CONTRACTOR SHALL COORDINATE ALL REQUIREMENTS OF THE CONTRACT DOCUMENTS INTO THE SHOP DRAWINGS AND FIELD WORK.

COORDINATE DIMENSIONS OF ALL OPENINGS, DEPRESSIONS, BLOCKOUTS, ETC. WITH ARCHITECTURAL DRAWINGS, DRAWINGS FROM OTHER DISCIPLINES, PROJECT SHOP DRAWINGS, AND FIELD CONDITIONS PRIOR TO SHOP DRAWING SUBMITTAL. THE STRUCTURAL DRAWINGS ONLY REPRESENT A PORTION OF THE REQUIREMENTS FOR THE PROJECT.

SEE ARCHITECTURAL PLANS FOR INTERIOR NON-BEARING PARTITION WALLS. PARTITION FRAMING SHALL BE CONNECTED TO THE PRIMARY STRUCTURE TO ALLOW FOR VERTICAL LIVE LOAD DEFLECTIONS OF SPAN/360 FOR FLOOR FRAMING AND SPAN/240 FOR ROOF FRAMING.

CONTRACTOR'S CONSTRUCTION AND/OR ERECTION SEQUENCES SHALL RECOGNIZE AND CONSIDER THE EFFECTS OF THERMAL MOVEMENTS OF STRUCTURAL ELEMENTS DURING THE CONSTRUCTION PERIOD.

THE CONTRACTOR SHALL VERIFY ALL DIMENSIONS IN THE FIELD.

SHOP DRAWINGS SHALL BE FURNISHED AND REVIEWED BEFORE ANY FABRICATION OR ERECTION IS STARTED. THE CONTRACTOR SHALL REVIEW AND APPROVE SHOP DRAWINGS PRIOR TO SUBMITTAL TO THE ARCHITECT FOR REVIEW. POORLY EXECUTED SHOP DRAWINGS WILL BE REJECTED AND SHALL BE RESUBMITTED.

THE CONTRACTOR SHALL BE RESPONSIBLE FOR PROVIDING SAFE AND ADEQUATE SHORING FOR ALL PARTS OF THE STRUCTURE DURING CONSTRUCTION.

TEMPORARY PROVISIONS SHALL BE MADE FOR STRUCTURAL STABILITY DURING CONSTRUCTION. THE STRUCTURE SHOWN ON THE DRAWINGS HAS BEEN DESIGNED FOR STABILITY UNDER FINAL CONFIGURATION.

NOTCHING OR CUTTING ANY STRUCTURAL MEMBER IN THE FIELD IS PROHIBITED.

THE CONTRACTOR SHALL VERIFY THE SIZE AND LOCATION OF FOUNDATIONS UNDER MECHANICAL AND ELECTRICAL EQUIPMENT AS REQUIRED. NO CONCRETE PADS SHALL BE LOCATED ON ROOF UNLESS SHOWN ON THE STRUCTURAL DRAWINGS.

BACKFILL SHALL NOT BE PLACED BEHIND RETAINING WALLS UNTIL CONCRETE HAS ATTAINED 100 PERCENT OF DESIGN STRENGTH.

GENERAL STRUCTURAL NOTES

BACKFILL SHALL NOT BE PLACED BEHIND BASEMENT WALLS UNTIL THE CONCRETE HAS ATTAINED 100 PERCENT OF DESIGN STRENGTH AND THE ELEVATED FLOOR PROVIDING LATERAL SUPPORT AT THE TOP OF THE WALL IS COMPLETELY CONSTRUCTED, OR TEMPORARY BRACING/SHORING OF THE WALL IS PROVIDED. DESIGN OF ANY TEMPORARY WALL BRACING/SHORING IS THE RESPONSIBILITY OF THE CONTRACTOR.

REMOVAL OF FORMS AND SHORING SHALL BE IN ACCORDANCE WITH ACI 347. WHERE CONCRETE MUST SUPPORT SUPERIMPOSED LOADS PRIOR TO ATTAINING THE SPECIFIED DESIGN STRENGTH, RESHORE CONCRETE IN ACCORDANCE WITH ACI 347. RESHORING SHALL NOT BE REMOVED SOONER THAN 28 DAYS FROM THE DATE OF POUR OR UNTIL CONCRETE HAS ATTAINED THE SPECIFIED DESIGN STRENGTH.

THE CONTRACTOR SHALL SUBMIT FOR PRIOR APPROVAL THE END OF POUR LOCATIONS FOR CONCRETE GRADE BEAMS, CONCRETE COLUMNS, AND CONCRETE BEAMS.

THE CONTRACTOR SHALL BE RESPONSIBLE FOR ADHERING TO ALL APPLICABLE STANDARDS SET FORTH BY OSHA, INCLUDING THE FOLLOWING REQUIREMENTS FROM STANDARDS - 29 CFR, SECTION 1926, SUBPART R:

A. THE STEEL ERECTION CONTRACTOR SHALL NOT ERECT STEEL UNLESS THEY HAVE RECEIVED WRITTEN NOTIFICATION FROM THE CONTRACTOR THAT THE CONCRETE IN THE FOOTINGS, PIERS AND WALLS OR THE MORTAR IN THE MASONRY PIERS AND WALLS HAS ATTAINED, ON THE BASIS OF AN APPROPRIATE ASTM STANDARD TEST METHOD OF FIELD-CURED SAMPLES, EITHER 75 PERCENT OF THE INTENDED MINIMUM COMPRESSIVE DESIGN STRENGTH OR SUFFICIENT STRENGTH TO SUPPORT THE LOADS IMPOSED DURING STEEL ERECTION.

   PROVIDE STRUCTURAL ENGINEER A COPY OF WRITTEN NOTIFICATION WHEN IT IS PROVIDED TO THE STEEL ERECTOR.

B. ANCHOR RODS (ANCHOR BOLTS) SHALL NOT BE REPAIRED, REPLACED OR FIELD-MODIFIED WITHOUT THE APPROVAL OF THE PROJECT STRUCTURAL ENGINEER OF RECORD.

   PRIOR TO ERECTION OF COLUMNS, THE CONTRACTOR SHALL PROVIDE WRITTEN NOTIFICATION TO THE STEEL ERECTOR IF THERE HAS BEEN ANY REPAIR, REPLACEMENT OR MODIFICATION OF THE ANCHOR RODS (ANCHOR BOLTS).

   PROVIDE STRUCTURAL ENGINEER A COPY OF WRITTEN NOTIFICATION WHEN IT IS PROVIDED TO THE STEEL ERECTOR.

C. NO MODIFICATION THAT AFFECTS THE STRENGTH OF A STEEL JOIST OR STEEL JOIST GIRDER SHALL BE MADE WITHOUT THE APPROVAL OF THE PROJECT STRUCTURAL ENGINEER OF RECORD.

D. METAL DECKING HOLES AND OPENINGS SHALL NOT BE CUT UNTIL IMMEDIATELY PRIOR TO BEING PERMANENTLY FILLED WITH THE EQUIPMENT OR STRUCTURE OR SHALL BE IMMEDIATELY COVERED.

PROTECTION: PROPER PRECAUTIONS SHALL BE TAKEN AT ALL TIMES TO PROTECT VEHICULAR AND PEDESTRIAN TRAFFIC FROM ANY DAMAGE OR INJURY WHICH MAY BE CAUSED, EITHER DIRECTLY OR INDIRECTLY, BY THE WORK INCLUDED ON THESE DRAWINGS. SUCH PRECAUTIONS SHALL INCLUDE THE ERECTION AND MAINTENANCE OF FENCES, BARRICADES, RAILINGS, GUARDS, SIGNS, COVERINGS, LIGHTS, AND OTHER PRECAUTIONS AS MAY BE REQUIRED. IF AT ANY TIME, IN THE OPINION OF THE OWNER OR THE OWNER'S REPRESENTATIVE, PROPER PRECAUTIONS ARE NOT BEING TAKEN TO SECURE THIS PROTECTION, THE CONTRACTOR SHALL AT NO ADDITIONAL COST TO THE OWNER, INSTALL AND MAINTAIN SUCH ADDITIONAL PROTECTION AS MAY BE DIRECTED BY THE OWNER.

POLLUTION CONTROLS: USE WATER SPRINKLING, TEMPORARY ENCLOSURES, AND OTHER SUITABLE METHODS TO LIMIT DUST AND DIRT RISING AND SCATTERING IN THE AIR TO LOWEST PRACTICAL LEVEL. COMPLY WITH GOVERNING REGULATIONS PERTAINING TO ENVIRONMENTAL PROTECTION.

DRAWINGS:

DO NOT SCALE DRAWINGS.

WHERE DISCREPANCIES OCCUR BETWEEN PLANS, DETAILS, GENERAL NOTES, AND SPECIFICATIONS, THE MORE STRINGENT REQUIREMENTS SHALL GOVERN. DETAILS ON DRAWINGS TAKE PRECEDENCE OVER GENERAL NOTES AND TYPICAL DETAILS. DETAILS NOTED "TYPICAL" APPLY TO ALL SIMILAR CONDITIONS. WHERE NO SPECIFIC DETAILS ARE SHOWN, CONSTRUCTION SHALL CONFORM TO SIMILAR WORK ELSEWHERE ON THE PROJECT.

CAST-IN-PLACE CONCRETE:

ALL CONCRETE SHALL CONFORM TO THE SPECIFICATIONS FOR STRUCTURAL CONCRETE, ACI 301-10.

ALL EXPOSED EDGES OF CONCRETE SHALL HAVE A 3/4" CHAMFER UNLESS NOTED OTHERWISE.

NORMALWEIGHT CONCRETE:

A. F'C = 4500 PSI @ 28 DAYS – ALL CONCRETE EXPOSED TO FREEZE/THAW CYCLES AND OCCASIONAL MOISTURE, INCLUDING CONCRETE FLAT WORK, EXPOSED BUILDING STEM WALLS, SITE WALLS, TYPICAL BUILDING PERIMETER STEM WALLS ETC.
   EXTERIOR CONCRETE SHALL MEET EXPOSURE CATEGORY AND CLASS F1 ACCORDING TO ACI 318 TABLE 19.3.1.1.
B. F'C = 3000 PSI @ 28 DAYS - ALL INTERIOR CONCRETE (I.E. FOOTINGS, PEDESTALS, TIE BEAMS, GRADE BEAMS, INTERIOR RETAINING WALLS, ETC.).
C. F'C = 3000 PSI @ 28 DAYS - ALL INTERIOR SLABS ON GRADE, UNLESS NOTED OTHERWISE.
D. F'C = 4000 PSI @ 28 DAYS – ALL SLABS ON GRADE TO RECEIVE POLISHED CONCRETE FINISH.

CONCRETE MIX DESIGNS (INCLUDING AIR CONTENT, WATER TO CEMENT RATIOS, AND OTHER CRITERIA) SHALL CONFORM TO THE REQUIREMENTS SET FORTH IN ACI 318 TABLE 19.3.2.1, BASED ON THE EXPOSURE CATEGORIES AND CLASSES DEFINED IN ACI 318 TABLE 19.3.1.1. USE AIR ENTRAINING ADMIXTURE IN ALL EXTERIOR CONCRETE. AIR CONTENT IN FIRE RATED SLABS SHALL ALSO COMPLY WITH THE REQUIREMENTS IN THE SPECIFIED UL LISTING.

COLD WEATHER CONCRETING: PROTECT CONCRETE WORK FROM PHYSICAL DAMAGE OR REDUCED STRENGTH CAUSED BY FROST, FREEZING OR LOW TEMPERATURES. COMPLY WITH ACI 306.1.

HOT WEATHER CONCRETING: WHEN HOT WEATHER CONDITIONS EXIST THAT WOULD IMPAIR THE QUALITY AND STRENGTH OF THE CONCRETE, REDUCE DELIVERY TIME OF READY-MIX CONCRETE, LOWER THE TEMPERATURE OF MATERIALS, OR ADD RETARDER TO ENSURE THAT THE CONCRETE IS PLASTIC. RETEMPERING WITH WATER IS NOT ALLOWED. COMPLY WITH ACI 305R.

SLAB CURING: ALL INTERIOR CONCRETE SLABS, EXCEPT EXPOSED INTEGRALLY COLORED SLABS, ARE TO BE CURED WITH A MOISTURE RETAINING COVER FOR THE FIRST 7 DAYS (MINIMUM) AFTER PLACEMENT.

SAW-CUT CONTROL JOINTS IN SLABS-ON-GRADE SHALL NOT CUT THE SLAB REINFORCING.

THE CONTRACTOR IS ALLOWED TO CAST FOUNDATIONS AGAINST EXCAVATED SOIL SURFACES, PROVIDED THE FOLLOWING IS ADHERED TO:

A. THE SIDE SLOPES OF THE EXCAVATION SHALL BE ABLE TO MAINTAIN VERTICAL SLOPE WITHOUT SOIL SLOUGHAGE.
B. THE BOTTOM WIDTH OF THE EXCAVATION SHALL BE ONE INCH WIDER MINIMUM ON EACH SIDE THAN THE SPECIFIED FOOTING WIDTH.
C. THE SIDE WALLS OF THE EXCAVATION SHALL BE BATTERED A MINIMUM OF ONE INCH HORIZONTAL TO TWELVE INCHES VERTICAL.
D. IF SANDY OR LOOSE MATERIALS ARE ENCOUNTERED, THE FOOTING MUST BE FORMED.
E. THE CONTRACTOR SHALL BE RESPONSIBLE FOR REMOVAL OF ANY SOIL SLOUGHAGE FROM THE WET CONCRETE DURING THE CASTING OPERATION.
F. THE CONTRACTOR AGREES TO REMOVE AND RECAST ANY FOOTING WHERE THE ABOVE CONDITIONS ARE NOT MET.

EXPOSED SITE WALLS, RETAINING WALLS, AND STEM WALLS GREATER THAN 30 FEET IN LENGTH SHALL HAVE CONTROL JOINTS INSTALLED AT THE FOLLOWING MAXIMUM SPACING:

12'-0" ON CENTER FOR WALLS 6'-0" MAXIMUM HEIGHT
18'-0" ON CENTER FOR WALLS 10'-0" MAXIMUM HEIGHT
20'-0" ON CENTER FOR WALLS GREATER THAN 10'-0" IN HEIGHT

ALL CONCRETE EXPOSED TO GROUND SHALL BE MANUFACTURED WITH PORTLAND CEMENT TYPE II OR TYPE V.

POLISHED CONCRETE FLOORS:

PRIOR TO PLACEMENT OF THE CONCRETE SLABS TO RECEIVE A POLISHED FINISH, THE CONTRACTOR, ARCHITECT, AND ENGINEER SHALL MEET TO DISCUSS THE PROCESS AND CLARIFY THE EXPECTATIONS FOR THE POLISHED CONCRETE FLOORS. THE CONTRACTOR IS RESPONSIBLE FOR SCHEDULING THIS MEETING.

EACH CONCRETE MIX INGREDIENT OF THE POLISHED FLOORS SHALL BE FROM THE SAME SOURCE, FROM THE SAME RESPECTIVE BATCH, AND EACH DELIVERED TO THE CONCRETE PRODUCER IN ONE DELIVERY.

AGGREGATE IN POLISHED CONCRETE SLABS SHALL BE NON-POROUS.

INCLUSION OF ADMIXTURES, PLASTICIZERS, SLAG, FLY ASH, OR OTHER PRODUCTS REPLACING PORTIONS OF THE PORTLAND CEMENT IN THE CONCRETE MIX SHALL NOT BE USED UNLESS APPROVED BY THE ENGINEER OF RECORD. ANY APPROVED ADMIXTURES SHALL NOT BE CALCIUM CHLORIDE BASED, AND THEIR VOLUME SHALL NOT EXCEED 20% OF THE PORTLAND CEMENT VOLUME.

POLISHED CONCRETE FLOORS SHALL BE CURED WITH A MOISTURE RETAINING COVER IN ACCORDANCE WITH ACI308R-01. THE SLAB SHALL REMAIN CONTINUOUSLY COVERED DURING THIS TIME TO MAINTAIN THE MOISTURE IN THE SLAB. CURING COMPOUNDS ARE NOT ALLOWED IN POLISHED CONCRETE FLOORS.

SEE ARCHITECTURAL DRAWINGS AND SPECIFICATIONS FOR THE FLOOR SHINE AND AGGREGATE EXPOSURE REQUIREMENTS.

FLOOR FLATNESS (FF NUMBER) OF POLISHED CONCRETE FLOORS SHALL HAVE A MINIMUM OVERALL VALUE OF 50, AND A MINIMUM LOCAL VALUE OF 35 WHEN TESTED IN ACCORDANCE WITH ASTM E1155.

FLOOR LEVELNESS (FL NUMBER) OF POLISHED CONCRETE FLOORS SHALL HAVE A MINIMUM OVERALL VALUE OF 30, AND A MINIMUM LOCAL VALUE OF 20 WHEN TESTED IN ACCORDANCE WITH ASTM E1155.

GENERAL STRUCTURAL NOTES

CONTRACTOR SHALL CREATE A MOCKUP OF THE POLISHED FLOOR PRIOR TO POLISHING THE BUILDING SLAB. THE MOCKUP SHALL BE AT LEAST 4 FEET SQUARE.

REINFORCING STEEL:

ALL REINFORCING STEEL SHALL BE FABRICATED AND PLACED IN ACCORDANCE WITH THE BUILDING CODE REQUIREMENTS FOR STRUCTURAL CONCRETE (ACI 318-14), AND DETAILS AND DETAILING OF CONCRETE REINFORCEMENT (ACI 315-99).

ALL REINFORCING STEEL SHALL CONFORM TO ASTM A615 GRADE 60; EXCEPT STIRRUPS, TIES AND INDICATED FIELD-BENT BARS, WHICH SHALL CONFORM TO ASTM A615 GRADE 40.

ALL WELDED WIRE FABRIC SHALL BE DEFORMED AND SHALL CONFORM TO ASTM A479. PROVIDE IN FLAT SHEETS ONLY.

TENSION AND COMPRESSION LAPS IN REINFORCING SHALL CONFORM TO THE LAP SPLICE SCHEDULE ON SHEET S-601 AND BE IN ACCORDANCE WITH ACI 318, CHAPTER 12, UNLESS NOTED OTHERWISE.

ALL HORIZONTAL REINFORCING IN FOOTINGS, WALLS AND BEAMS SHALL BE CONTINUOUS AROUND CORNERS OR HAVE BENT (CORNER) BARS OF THE SAME SIZE AND SPACING AS THE HORIZONTAL BARS AND LAP 30 BAR DIAMETERS (18" MINIMUM).

CONCRETE COVER FOR REINFORCING SHALL BE AS FOLLOWS UNLESS OTHERWISE NOTED:

A. CONCRETE FOR FOUNDATIONS CAST AGAINST AND PERMANENTLY EXPOSED TO EARTH: 3"
B. CONCRETE CAST AGAINST FORMS BUT EXPOSED TO EARTH OR WEATHER:
   1. BARS LARGER THAN NO. 5: 2"
   2. BARS NO. 5 OR SMALLER: 1 1/2"
C. CONCRETE NOT EXPOSED TO WEATHER OR NOT IN CONTACT WITH GROUND:
   1. COLUMNS, GIRDERS AND BEAMS: 1 1/2"
   2. STRUCTURAL SLABS, WALLS AND JOISTS (NO. 11 AND SMALLER): 3/4"
D. 4" CONCRETE SLAB-ON-GRADE: 1 1/4" FROM TOP OF SLAB
E. 5" CONCRETE SLAB-ON-GRADE: 1 1/2" FROM TOP OF SLAB
F. 6" CONCRETE SLAB-ON-GRADE: 1 3/4" FROM TOP OF SLAB
G. 8" CONCRETE SLAB-ON-GRADE: 2 1/4" FROM TOP OF SLAB
H. STRUCTURAL CONCRETE SLABS ON METAL DECK: 1" FROM TOP OF SLAB

FORM TIES SHALL BE EITHER OF THE THREADED OR SNAP-OFF TYPE SO THAT NO METAL WILL BE LEFT WITHIN 1 INCH OF THE SURFACE OF THE WALL. FOLLOWING REMOVAL OF FORM TIES, RECESSES ARE TO BE CAREFULLY FILLED AND POINTED WITH MORTAR.

REINFORCING SHALL NOT BE TACK WELDED OR WELDED IN ANY MANNER UNLESS SPECIFICALLY DETAILED ON THE STRUCTURAL PLANS.

BAR SUPPORTS AND SPACERS FOR REINFORCING SHALL BE PROVIDED IN ACCORDANCE WITH ACI 315-99. REINFORCING SHALL BE SECURELY TIED TO SUPPORTS.

CHAIRS WITH 22 GAGE SAND PLATES OR PRECAST BLOCKS SHALL BE PROVIDED FOR ALL REINFORCING OF CONCRETE IN CONTACT WITH GRADE.

DECK CHAIRS SHALL BE PROVIDED FOR ALL WELDED WIRE FABRIC IN SLABS OVER METAL DECK.

POST INSTALLED ANCHORS:

THE STRUCTURAL DESIGN IS BASED ON THE POST INSTALLED ANCHORING SYSTEMS NOTED BELOW. SINCE ANCHOR CAPACITIES VARY BY MANUFACTURER, THE CONTRACTOR SHALL USE ONLY THE SYSTEMS NOTED BELOW UNLESS AN ALTERNATE IS APPROVED BY THE ENGINEER OF RECORD. ALTERNATE ANCHORING SYSTEMS MAY REQUIRE RE-DESIGN TO VERIFY ANCHOR QUANTITIES, SPACING, AND EMBED DEPTHS. THE CONTRACTOR SHALL BE RESPONSIBLE FOR ANY ADDITIONAL CONSTRUCTION AND RE-DESIGN COSTS ASSOCIATED WITH THE ALTERNATE ANCHORING SYSTEM.

ALL ADHESIVE (EPOXY OR ACRYLIC) FOR POST INSTALLED ANCHORS AND/OR REBAR INTO CONCRETE SHALL BE HILTI HIT-RE 500 V3 EPOXY ADHESIVE ANCHORING SYSTEM. INSTALLATION SHALL BE PER THE MANUFACTURER'S PRINTED INSTALLATION INSTRUCTIONS.

ALL ADHESIVE (EPOXY OR ACRYLIC) FOR POST INSTALLED ANCHORS AND/OR REBAR INTO GROUT FILLED MASONRY SHALL BE HILTI HIT HY 270 ADHESIVE ANCHORING SYSTEM. INSTALLATION SHALL BE PER THE MANUFACTURER'S PRINTED INSTALLATION INSTRUCTIONS.

ALL POST INSTALLED MECHANICAL ANCHORS INTO CONCRETE SHALL BE HILTI KWIK BOLT TZ EXPANSION ANCHOR. INSTALLATION SHALL BE PER THE MANUFACTURER'S PRINTED INSTALLATION INSTRUCTIONS.

ALL POST INSTALLED MECHANICAL ANCHORS INTO GROUT FILLED MASONRY SHALL BE HILTI KWIK BOLT 3 EXPANSION ANCHOR. INSTALLATION SHALL BE PER THE MANUFACTURER'S PRINTED INSTALLATION INSTRUCTIONS.

ALL POST INSTALLED SCREW ANCHORS INTO CONCRETE SHALL BE SIMPSON TITEN HD SCREW ANCHORS. INSTALLATION SHALL BE PER THE MANUFACTURER'S PRINTED INSTALLATION INSTRUCTIONS.

ANCHOR LENGTHS SHOWN FOR ATTACHMENT TO CONCRETE AND/OR MASONRY ARE REQUIRED EMBEDMENT LENGTHS. THE CONTRACTOR SHALL PROVIDE ANCHORS WITH ADDITIONAL LENGTH TO FACILITATE THE REQUIRED CONNECTION.

SUBMIT ALL PROPOSED ANCHORING SYSTEMS INCLUDING ICC-ES REPORTS TO STRUCTURAL ENGINEER FOR REVIEW PRIOR TO INSTALLATION. THE ICC–ES FORMS SHALL MEET THE REQUIREMENTS OF THE IBC REFERENCED IN THESE NOTES.

ALL POST-INSTALLED ANCHORS SHALL BE INSTALLED WITH SPECIAL INSPECTION AS DICTATED BY THE RESPECTIVE PRODUCT'S ICC-ES EVALUATION SERVICE REPORT

THE CONTRACTOR SHALL ARRANGE AN ANCHOR MANUFACTURER'S REPRESENTATIVE TO PROVIDE ONSITE INSTALLATION TRAINING, UNLESS ALL PERSONNEL INSTALLING ANCHORS ARE CERTIFIED IN ACCORDANCE WITH ACI/CRSI ADHESIVE ANCHOR INSTALLER CERTIFICATION PROGRAM, OR EQUIVALENT APPROVED BY THE ENGINEER OF RECORD.

INSTALLATION OF ADHESIVE ANCHORS IN HORIZONTAL TO VERTICALLY OVERHEAD ORIENTATION SHALL BE CONTINUOUSLY INSPECTED DURING INSTALLATION BY AN INSPECTOR SPECIALLY APPROVED FOR THAT PURPOSE BY THE BUILDING OFFICIAL. INSTALLATION SHALL BE DONE BY A CERTIFIED ADHESIVE ANCHOR INSTALLER (AAI) AS CERTIFIED THROUGH ACI/CRSI ADHESIVE ANCHOR INSTALLER CERTIFICATION PROGRAM, OR EQUIVALENT. PROOF OF CURRENT CERTIFICATION SHALL BE SUBMITTED TO THE ENGINEER PRIOR TO COMMENCEMENT OF INSTALLATION, AND INSPECTION REPORTS SHALL BE PROVIDED TO THE ENGINEER OF RECORD AND THE BUILDING OFFICIAL.

STRUCTURAL AND MISCELLANEOUS STEEL:

ALL STRUCTURAL STEEL SHALL BE DETAILED AND FABRICATED IN ACCORDANCE WITH THE AISC "SPECIFICATION FOR STRUCTURAL STEEL BUILDINGS".

ALL WIDE FLANGE SHAPES SHALL CONFORM TO ASTM A992, GRADE 50, UNLESS NOTED OTHERWISE.

ALL MISCELLANEOUS STEEL MEMBERS, SUCH AS CHANNELS, ANGLES, FLAT BARS, AND PLATES SHALL CONFORM TO ASTM A36 UNLESS NOTED OTHERWISE.

ALL RECTANGULAR AND SQUARE STRUCTURAL TUBING SHALL CONFORM TO ASTM A500, GRADE C, FY = 50 KSI.

ALL ROUND STRUCTURAL TUBING SHALL CONFORM TO ASTM A500, GRADE C, FY = 50 KSI

ALL STRUCTURAL PIPE SHALL CONFORM TO ASTM A53, TYPE E OR S, GRADE B, FY = 35 KSI.

BOLTS SHALL CONFORM TO ASTM A325N TENSION CONTROL BOLTS UNLESS NOTED OTHERWISE, WITH SIZES AS SHOWN ON THE DRAWINGS. WHERE CLEARANCE WITHIN A CONNECTION DOES NOT PERMIT THE USE OF TENSION CONTROL BOLTS, STANDARD A325N BOLTS SHALL BE USED AND INSPECTED IN ACCORDANCE WITH THE AISC "SPECIFICATION FOR STRUCTURAL JOINTS USING ASTM A325 OR A490 BOLTS".

ALL BOLTS SHALL BE INSTALLED IN A SNUG TIGHT CONDITION EXCEPT AT MOMENT CONNECTIONS, BRACED FRAME CONNECTIONS, AND AT CONNECTIONS DETAILED WITH A325SC BOLTS. AT THESE LOCATIONS, THE BOLTS SHALL BE TIGHTENED SO AS TO SHEAR THE SPLINE OFF THE BOLT.

ANCHOR BOLTS EMBEDDED IN CONCRETE SHALL BE ASTM F1554 GRADE 36 THREADED RODS WITH DOUBLE NUTS. PROVIDE FLAT WASHERS BETWEEN NUTS AND BASEPLATE SURFACES. ANCHOR BOLT LENGTHS SHOWN FOR ATTACHMENT TO CONCRETE AND/OR MASONRY ARE REQUIRED EMBEDMENT LENGTHS. THE CONTRACTOR SHALL PROVIDE ANCHOR BOLTS WITH ADDITIONAL BOLT LENGTH TO FACILITATE THE REQUIRED CONNECTION.

ANCHOR BOLT FLAT WASHERS SHALL BE PROVIDED IN ACCORDANCE WITH TABLE 14-2 OF AISC 360, AISC MANUAL OF STEEL CONSTRUCTION LATEST EDITION.

ALL WELDING SHALL BE DONE IN ACCORDANCE WITH THE LATEST STANDARDS OF THE AWS STRUCTURAL WELDING CODE.

ALL BOLT HOLES THAT ARE REQUIRED TO BE FIELD DRILLED SHALL BE DRILLED WITH A MAG DRILL. FLAME CUTTING OF HOLES OR ENLARGING OF MISALIGNED HOLES WILL NOT BE ALLOWED.

HEADED CONCRETE ANCHORS AND SHEAR CONNECTORS SHALL BE MADE FROM STEEL CONFORMING TO ASTM A108 AND MEET THE MECHANICAL PROPERTIES OF TYPE B, AS REQUIRED BY CHAPTER 7 OF AWS D1.1 "STRUCTURAL WELDING CODE-STEEL", LATEST EDITION. STRUCTURAL STEEL TO RECEIVE SHEAR CONNECTORS SHALL BE FREE OF PAINT. WELDING PREQUALIFICATION REQUIRED.

ALL EXPOSED STRUCTURAL STEEL AT PORTE COCHERE SHALL CONFORM TO AESS 2 PER THE 2016 AISC CODE OF STANDARD PRACTICE. SEE ARCHITECTURAL DRAWINGS FOR ADDITIONAL FINISHING REQUIREMENTS.

GENERAL STRUCTURAL NOTES

STEEL DECK:

ALL STEEL DECK SHALL BE FABRICATED AND ERECTED IN ACCORDANCE WITH THE LATEST EDITION OF THE STEEL DECK INSTITUTE SPECIFICATIONS.

SEE PLANS FOR STEEL DECK TYPE, GAGE, FINISH AND CONNECTIONS.

PROVIDE A MINIMUM OF 1 1/2" BEARING FOR ALL STEEL DECK.

ALL SPLICES AND LAPS SHALL BE A MINIMUM OF 2" IN LENGTH AND SHALL BE LOCATED DIRECTLY ABOVE SUPPORTS.

ALL DECKING SHALL BE CONTINUOUS OVER TWO OR MORE SPANS.

COLD-FORMED METAL FRAMING (43 MILS OR HEAVIER):

ALL COLD-FORMED METAL FRAMING SHALL CONFORM TO THE LATEST EDITION OF AISI STANDARD S100 "NORTH AMERICAN SPECIFICATION FOR THE DESIGN OF COLD-FORMED STEEL STRUCTURAL MEMBERS".

WALLS SHALL BE PROVIDED WITH MANUFACTURER'S STANDARD BRIDGING: (EITHER WELDED 2 1/2" x 43 MILS STUD OR CLIPPED COLD-ROLLED CHANNEL 1 1/2" x 54 MILS). PROVIDE BRIDGING AT 4'-0" ON CENTER MAXIMUM FOR LOAD BEARING WALLS AND EXTERIOR WALLS.

PROVIDE ALL MISCELLANEOUS ACCESSORIES AND FOLLOW ERECTION PROCEDURES AS PER MANUFACTURER'S SPECIFICATIONS AND RECOMMENDATIONS UNLESS NOTED OTHERWISE.

COLD-FORMED METAL FRAMING SHALL MEET THE MINIMUM PROPERTIES AS SHOWN IN THE STEEL STUD MANUFACTURERS ASSOCIATION (SSMA) SPECIFICATIONS.

ALL TRACK SHALL BE ANCHORED TO CONCRETE WITH 1/2" DIAMETER x 3 1/2" EMBED EXPANSION ANCHORS SPACED AT 4'-0" ON CENTER UNLESS SHOWN OTHERWISE ON PLANS.

SECURE STUDS TO TOP AND BOTTOM TRACKS BY WELDING AT BOTH INSIDE AND OUTSIDE FLANGES OR WITH A MINIMUM OF 1-#10 SELF-DRILLING SCREW PER LOCATION UNLESS NOTED OTHERWISE.

ALL COMPONENTS OF BUILT-UP STUD SECTIONS, INCLUDING COLUMNS, JAMBS, HEADERS, ETC. SHALL BE WELDED TOGETHER UTILIZING 1/8" FILLET WELDS, 1" LONG AT 12" OC OR MECHANICALLY FASTENED WITH #10 SELF-DRILLING SCREWS AT 12" OC ALONG THE FULL LENGTH OF EACH FLANGE TO FLANGE CONNECTION.

FASTEN WELD CLIPS TO STUDS IN ACCORDANCE WITH MANUFACTURER'S RECOMMENDATIONS AND LOAD DATA TO PROVIDE AN ALLOWABLE LOAD OF 700# MINIMUM IN THE HORIZONTAL DIRECTION AND 700# MINIMUM IN THE VERTICAL DIRECTION.

FASTEN SLIDE CLIPS TO STUDS IN ACCORDANCE WITH MANUFACTURER'S RECOMMENDATIONS AND LOAD DATA TO PROVIDE AN ALLOWABLE LOAD OF 700# MINIMUM IN THE HORIZONTAL DIRECTION.

MASONRY:

ALL MASONRY UNITS SHALL COMPLY WITH ASTM C 90 WITH A COMPRESSIVE STRENGTH OF 2000 PSI (NET AREA).

F'M = 1900 PSI

MORTAR SHALL BE TYPE S.

GROUT - F'C = 2000 PSI, MINIMUM.

CELLS CONTAINING REBAR SHALL BE GROUTED SOLID FROM THE BOTTOM TO THE TOP OF THE WALL IN ACCORDANCE WITH THE INTERNATIONAL BUILDING CODE.

ALL CELLS BELOW GRADE SHALL BE GROUTED SOLID UP TO GRADE.

CELLS CONTAINING EXPANSION ANCHORS SHALL BE GROUTED SOLID.

ALL VERTICAL REBAR SHALL BE IN PLACE AND SECURED WITH REBAR POSITIONERS PRIOR TO GROUTING.

COVER FOR REINFORCING SHALL BE AS FOLLOWS UNLESS OTHERWISE NOTED:

A. MASONRY FACE NOT EXPOSED TO EARTH OR WEATHER: 1 1/2"
B. MASONRY FACE EXPOSED TO EARTH OR WEATHER:
   1. BARS LARGER THAN NO. 5: 2"
   2. BARS NO. 5 OR SMALLER: 1 1/2"

LAP REBAR 48 BAR DIAMETERS (12" MINIMUM) UNLESS NOTED OTHERWISE.

WHERE REBAR LAP SPLICES EXCEED 5 FT GROUT LIFTS, 8 FT GROUT LIFTS MAY BE USED WITH CLEANOUTS PROVIDED AT THE BOTTOM OF EACH VERTICALLY REINFORCED CELL. SOLID GROUTED WALLS SHALL HAVE CLEANOUTS AT 32" ON CENTER MAXIMUM.

ALL HORIZONTAL REINFORCING IN BOND BEAMS SHALL BE CONTINUOUS AROUND CORNERS OR HAVE BENT (CORNER) BARS OF THE SAME SIZE AND A LAP AS NOTED ABOVE. VERTICAL STEEL SHALL CONTINUE THROUGH BOND BEAMS.

PROVIDE STANDARD LADDER TYPE JOINT REINFORCING AT 16" ON CENTER (ALTERNATE COURSES) UNLESS NOTED OTHERWISE IN THE PROJECT DOCUMENTS. USE PREFABRICATED CORNERS AND TEES AT ALL WALL CORNERS AND INTERSECTIONS RESPECTIVELY.

SEE ARCHITECTURAL DRAWINGS AND SPECIFICATIONS FOR INFORMATION REGARDING MASONRY COLORS, FINISHES, BOND, COURSING, ETC. AT ALL EXPOSED MASONRY WALLS.

ALL MASONRY WALL CONFIGURATIONS INCLUDING WALL OPENINGS SHALL BE COORDINATED WITH CIVIL, MECHANICAL, PLUMBING, ELECTRICAL AND DRAWINGS FROM ALL OTHER DISCIPLINES.

EXPOSED MASONRY SITE WALLS AND RETAINING WALLS GREATER THAN 16 FEET IN LENGTH SHALL HAVE MASONRY CONTROL JOINTS INSTALLED AT THE FOLLOWING MINIMUM SPACING:

12'-0" ON CENTER FOR WALLS 6'-0" MAXIMUM HEIGHT
18'-0" ON CENTER FOR WALLS 10'-0" MAXIMUM HEIGHT
20'-0" ON CENTER FOR WALLS GREATER THAN 10'-0" IN HEIGHT

WOOD FRAMING:

ALL SAWN LUMBER (2"-4" THICK, 2" & WIDER) EXCEPT STUDS SHALL BE HEM FIR, NO. 2 OR BETTER, WITH THE FOLLOWING ALLOWABLE STRESSES: UNLESS NOTED OTHERWISE

MAXIMUM FIBER STRESS IN BENDING	FB= 850 PSI
TENSION PARALLEL TO GRAIN	FT= 525 PSI
COMPRESSION PARALLEL TO GRAIN	FC= 1300 PSI
COMPRESSION PERPENDICULAR TO GRAIN	FC= 405 PSI
HORIZONTAL SHEAR	FV= 150 PSI
MODULUS OF ELASTICITY	E= 1,300,000 PSI

ALL SAWN LUMBER (5"x5" OR LARGER BEAMS AND STRINGERS) SHALL BE HEM FIR, NO. 2 OR BETTER, WITH THE FOLLOWING ALLOWABLE STRESSES: UNLESS NOTED OTHERWISE

MAXIMUM FIBER STRESS IN BENDING:	FB= 675 PSI
TENSION PARALLEL TO GRAIN:	FT= 350 PSI
COMPRESSION PERPENDICULAR TO GRAIN	FC= 405 PSI
COMPRESSION PARALLEL TO GRAIN	FC= 500 PSI
HORIZONTAL SHEAR	FV= 140 PSI
MODULUS OF ELASTICITY:	E= 1,100,000 PSI

ALL SAWN LUMBER (5"x5" OR LARGER POSTS AND TIMBERS) SHALL BE HEM FIR, NO. 2 OR BETTER, WITH THE FOLLOWING ALLOWABLE STRESSES: UNLESS NOTED OTHERWISE

MAXIMUM FIBER STRESS IN BENDING	FB= 575 PSI
TENSION PARALLEL TO GRAIN	FT= 375 PSI
COMPRESSION PARALLEL TO GRAIN	FC= 575 PSI
COMPRESSION PERPENDICULAR TO GRAIN	FC= 405 PSI
HORIZONTAL SHEAR	FV= 140 PSI
MODULUS OF ELASTICITY	E= 1,100,000 PSI

STUDS (2"-4" THICK, 2" & WIDER) SHALL BE SPRUCE-PINE-FIR, NO. 2 OR BETTER, WITH THE FOLLOWING ALLOWABLE STRESSES: UNLESS NOTED OTHERWISE

MAXIMUM FIBER STRESS IN BENDING	FB= 875 PSI
TENSION PARALLEL TO GRAIN	FT= 450 PSI
COMPRESSION PARALLEL TO GRAIN	FC= 1150 PSI
COMPRESSION PERPENDICULAR TO GRAIN	FC= 425 PSI
HORIZONTAL SHEAR	FV= 135 PSI
MODULUS OF ELASTICITY	E= 1,500,000 PSI

LUMBER TONGUE AND GROOVE DECKING SHALL BE HEM FIR, NO. 2 OR BETTER, WITH THE FOLLOWING ALLOWABLE STRESSES: UNLESS NOTED OTHERWISE

MAXIMUM FIBER STRESS IN BENDING	FB= 1150 PSI
COMPRESSION PERPENDICULAR TO GRAIN	FC= 405 PSI
MODULUS OF ELASTICITY	E= 405 PSI

Chavez-Grieves
consulting engineers, inc.
4700 Lincoln Road NE, Suite 102 • Albuquerque, NM 87109
505-344-4080 • 505-343-8759 fax

STAMP

BENJAMIN L. BURKHARD
NEW MEXICO
26142
PROFESSIONAL ENGINEER
11/03/2023
EXP: 12/31/2024

DYRON MURPHY ARCHITECTS, P.C.
4505 Montbel Place NE, Albuquerque, New Mexico 87107

SHIPROCK PINNACLE HOTEL & RESTAURANT

SHIPROCK, NEW MEXICO

100% CONSTRUCTION DOCUMENTS

ISSUED FOR CONSTRUCTION

NOVEMBER 03, 2023

PROJECT NUMBER	DRAWN BY	PROJ MGR
2022.10	ML/KB	BB/MG

GENERAL STRUCTURAL NOTES

Sheet Title

Sheet Number of

S-002

11/3/2023 6:58:24 PM C:\Revit Projects\M97-198 Shiprock Pinnacle_Hotel_STRUCT_tfragua.rvt
DYRON MURPHY ARCHITECTS, P.C.

GENERAL STRUCTURAL NOTES

PRE-ENGINEERED/PREFABRICATED WOOD TRUSSES:

TRUSSES SHALL BE FABRICATED WITH WOOD CHORDS AND WOOD WEBS IN ACCORDANCE WITH DESIGNS PREPARED BY A PROFESSIONAL ENGINEER REGISTERED IN THE STATE THAT THE PROJECT IS LOCATED.

SHOP DRAWINGS AND STAMPED CALCULATIONS SHALL BE SUBMITTED FOR APPROVAL BY THE ENGINEER OF RECORD.

DESIGN STANDARDS SHALL CONFORM WITH THE APPLICABLE PROVISION OF THE LATEST EDITION OF THE NATIONAL DESIGN SPECIFICATION FOR WOOD CONSTRUCTION, PUBLISHED BY THE NATIONAL FOREST PRODUCTS ASSOCIATION, AND THE LATEST EDITION OF THE DESIGN SPECIFICATION FOR METAL PLATE CONNECTED WOOD TRUSSES, PUBLISHED BY THE TRUSS PLATE INSTITUTE.

ALL TRUSSES SHALL BE SECURELY BRACED BOTH DURING ERECTION AND AFTER PERMANENT INSTALLATION IN ACCORDANCE WITH THE LATEST EDITION OF BRACING WOOD TRUSSES: COMMENTARY AND RECOMMENDATIONS AS PUBLISHED BY THE TRUSS PLATE INSTITUTE.

STRUCTURAL GLUED-LAMINATED TIMBER:

GLUED-LAMINATED WOOD BEAMS AND GIRDERS SHALL BE OF DOUGLAS FIR-LARCH WITH ALLOWABLE STRESSES CORRESPONDING TO 24F-V8 AS LISTED IN THE LATEST EDITION OF THE NATIONAL DESIGN SPECIFICATION FOR WOOD CONSTRUCTION.

ADHESIVES SHALL MEET THE REQUIREMENTS FOR CONDITIONS OF SERVICE.

A COAT OF END SEALER SHALL BE APPLIED TO THE ENDS OF ALL MEMBERS AS SOON AS PRACTICABLE AFTER END TRIMMING, UNLESS OTHERWISE NOTED.

COORDINATE WITH ARCHITECTURAL DRAWINGS FOR FINISH OF THE SURFACE OF THE MEMBERS.

NOTCHING OF STRUCTURAL MEMBERS IN THE FIELD IS PROHIBITED UNLESS SPECIFICALLY SHOWN ON DRAWINGS.

ENGINEERED LUMBER

LAMINATED VENEER LUMBER (MICROLLAM, GANG-LAM W):
ALL BEAMS SHALL HAVE THE FOLLOWING ALLOWABLE STRESSES:

FLEXURAL STRESS	FB= 2600 PSI
COMPRESSION PARALLEL TO GRAIN	FC= 2510 PSI
COMPRESSION PERPENDICULAR TO GRAIN, PARALLEL TO GLUE LINE	FC= 750 PSI
HORIZONTAL SHEAR PERPENDICULAR TO GLUE LINE	FV= 285 PSI
MODULUS OF ELASTICITY	E= 1,900,000 PSI

PARALLEL STRAND LUMBER (PARALLAM):
ALL BEAMS SHALL HAVE THE FOLLOWING ALLOWABLE STRESSES:

FLEXURAL STRESS	FB= 2900 PSI
COMPRESSION PARALLEL TO GRAIN	FC= 2900 PSI
COMPRESSION PERPENDICULAR TO GRAIN, PARALLEL TO WIDE FACE OF STRANDS	FC= 750 PSI
HORIZONTAL SHEAR PERPENDICULAR TO WIDE FACE OF STRANDS	FV= 290 PSI
MODULUS OF ELASTICITY	E= 2,000,000 PSI

ALL COLUMNS SHALL HAVE THE FOLLOWING ALLOWABLE STRESSES:

FLEXURAL STRESS	FB= 2400 PSI
COMPRESSION PARALLEL TO GRAIN	FC= 2500 PSI
MODULUS OF ELASTICITY	E= 1,800,000 PSI

LAMINATED STRAND LUMBER (TIMBERSTRAND):
ALL BEAMS SHALL HAVE THE FOLLOWING ALLOWABLE STRESSES:

FLEXURAL STRESS	FB= 2250 PSI
COMPRESSION PARALLEL TO GRAIN	FC= 1950 PSI
COMPRESSION PERPENDICULAR TO GRAIN, PARALLEL TO WIDE FACE OF STRANDS	FC= 650 PSI
HORIZONTAL SHEAR PERPENDICULAR TO WIDE FACE OF STRANDS	FV= 285 PSI
MODULUS OF ELASTICITY	E= 1,500,000 PSI

PREFABRICATED WOOD JOISTS (TJI, BCI):
THE JOISTS SHALL BE MANUFACTURED TO FIT THE DIMENSIONS AND CHECKED FOR THE EFFECTS OF CONCENTRATED LOADS INDICATED ON THE PLANS. THE DESIGN STRESS VALUE SHALL BE IN COMPLIANCE WITH THE NATIONAL DESIGN SPECIFICATION FOR WOOD CONSTRUCTION

APA SPAN RATED SHEATHING:

SEE PLANS FOR GRADE, THICKNESS, AND LOCATIONS OF SHEATHING.

ROOF, FLOOR, AND WALL SHEATHING SHALL BE CONTINUOUS OVER 2 SPANS MINIMUM. ENDS OF PANELS SHALL OCCUR DIRECTLY OVER SUPPORTS.

METAL PLYWOOD CLIPS SHALL BE INSTALLED AT MID-SPAN BETWEEN SUPPORTS AT FLOOR AND ROOF SHEATHING.

WOOD CONNECTIONS:

NAILING SHALL BE IN ACCORDANCE WITH THE NAILING SCHEDULE ON SHEET S-601 UNLESS OTHERWISE NOTED. COMMON OR BOX NAILS MAY BE USED EXCEPT WHERE OTHERWISE NOTED.

JOIST HANGERS SHALL BE BY SIMPSON STRONG-TIE CO. OR EQUAL WITH CONNECTIONS INSTALLED ACCORDING TO MANUFACTURER'S RECOMMENDATIONS.

BOLTS AND LAG BOLTS (OR SCREWS) SHALL BE ASTM A307.

STEEL SIDE PLATES SHALL BE ASTM A36.

LAG BOLTS (OR SCREWS) SHALL BE INSTALLED IN PRE-DRILLED HOLES. THE SIZE OF THE PRE-DRILLED HOLES SHALL BE PER THE LATEST EDITION OF THE NATIONAL DESIGN SPECIFICATION FOR WOOD CONSTRUCTION.

LUMBER TONGUE AND GROOVE DECKING:

LUMBER TONGUE AND GROOVE DECKING SHAL BE INSTALLED WITH TONGUES OUTWARD ON ALL ROOFS AND WITH TONGUES UP ON SLOPED ROOFS.

CUT BOARDS SHALL BE SQUARE AT ENDS. IT IS NOT PERMITTED TO RIP BOARDS LONGITUDINALLY EXCEPT IN THE FINAL COURSE OF BOARDS.

DECKING SHALL BE ATTACHED TO SUPPORTS PER THE NAILING SCHEDULE ON SHEET S-601.

ALL DECKING SHALL BE INSTALLED IN A SIMPLE SPAN LAYUP WITH EACH BOARD SUPPORTED BY ONE FRAMING ELEMENT AT EACH END. THE LENGTH OF EACH BOARD SHALL THUS BE EQUAL TO THE CENTER SPACING OF SUPPORTING FRAMING ELEMENTS.

ELEVATORS:

THE STRUCTURE HAS BEEN DESIGNED FOR AN OTIS EDGE ELEVATOR.

ALL STRUCTURAL SUPPORTS, FLOOR PENETRATION SIZES AND PIT DIMENSIONS HAVE BEEN DESIGNED BASED ON THE ABOVE INFORMATION. SHOULD THE ACTUAL ELEVATOR(S) SELECTED DIFFER FROM THE INFORMATION PROVIDED ABOVE, THE CONTRACTOR SHALL BE RESPONSIBLE FOR ANY ADDITIONAL CONSTRUCTION AND REDESIGN COSTS ASSOCIATED WITH THE ALTERNATE ELEVATOR(S).

THE CONTRACTOR SHALL BE RESPONSIBLE FOR COORDINATING ALL ELEVATOR PIT AND FLOOR PENETRATION LOCATIONS AND DIMENSIONS.

THE CONTRACTOR SHALL BE RESPONSIBLE FOR COORDINATING ALL ELEVATOR OVERRUN REQUIREMENTS.

ELEVATOR CAR RAIL AND COUNTERWEIGHT RAIL SUPPORTS SHALL BE PROVIDED BY THE CONTRACTOR AS SHOWN ON PLAN. CAR RAIL AND COUNTERWEIGHT RAIL SUPPORTS SHALL BE PROVIDED AT AND BETWEEN ALL FLOOR LEVELS SERVICED BY THE ELEVATOR, ABOVE THE LAST STOP OF THE ELEVATOR, AND BETWEEN THE BASEMENT AND THE GROUND FLOOR AS REQUIRED BY THE ELEVATOR MANUFACTURER. IF THE ELEVATOR MANUFACTURER REQUIRES RAIL SUPPORTS THAT DIFFER FROM THOSE PROVIDED, THE ELEVATOR MANUFACTURER SHALL BE RESPONSIBLE FOR ADDITIONAL CONSTRUCTION COST AND DESIGN COST.

THE CONTRACTOR SHALL VERIFY THE DESIGN OF THE HOIST/SAFETY BEAM AND CONNECTIONS AS REQUIRED PER THE ELEVATOR MANUFACTURER.

STRUCTURAL ELEMENTS AFFECTED BY THE ELEVATOR LAYOUT SHALL NOT BE FABRICATED PRIOR TO APPROVAL OF ELEVATOR SHOP DRAWINGS.

GENERAL STRUCTURAL NOTES

SPECIAL INSPECTION:

THE OWNER SHALL PROVIDE FOR SERVICES OF A CERTIFIED INSPECTOR (APPROVED BY THE BUILDING OFFICIAL OR THE ENGINEER OF RECORD) IN ACCORDANCE WITH CHAPTER 17 OF THE INTERNATIONAL BUILDING CODE FOR THE SPECIAL INSPECTION ITEMS NOTED ON SHEET S-003.

DEFERRED SUBMITTALS:

THE DEFERRED SUBMITTALS LISTED BELOW ARE THOSE PORTIONS OF THE DESIGN THAT ARE NOT COMPLETED AT THE TIME OF APPLICATION FOR PERMIT AND ARE TO BE SUBMITTED TO THE BUILDING OFFICIAL AND APPROVED PRIOR TO THE INSTALLATION OF THOSE ITEMS. THE CONTRACTOR SHALL BE RESPONSIBLE FOR THE DESIGN OF THE FOLLOWING ITEMS:

- PRE-ENGINEERED/PREFABRICATED WOOD ROOF AND FLOOR TRUSSES
- METAL STAIRS AND GUARDRAILS
- INTERIOR AND EXTERIOR SIGNAGE
- SOIL IMPROVEMENT/GEOGRID IMPROVED FILL
- MECHANICAL EQUIPMENT CURBS AND ATTACHMENT TO STRUCTURE

SCHEDULE OF STRUCTURAL SPECIAL INSPECTIONS

1. SPECIAL INSPECTIONS / TESTING - "SPECIAL STRUCTURAL INSPECTION" SHALL NOT RELIEVE THE OWNER OR THEIR AGENT FROM HAVING THE INSPECTIONS OF THE JURISDICTION BUILDING DEPARTMENT PER SECTION 110 OF THE IBC PERFORMED. BOTH THE JURISDICTION BUILDING DEPARTMENT INSPECTIONS AND "SPECIAL STRUCTURAL INSPECTION" SHALL BE PERFORMED.

2. THE GENERAL CONTRACTOR SHALL BE RESPONSIBLE FOR NOTIFYING THE JURISDICTION BUILDING OFFICIAL AND SPECIAL INSPECTOR WHEN WORK IS READY FOR INSPECTION.

3. REPORTING FOR SPECIAL INSPECTION - SPECIAL INSPECTION AND TESTING REPORTS SHALL BE COMPLETED AND DISTRIBUTED AT THE COMPLETION OF EACH TASK. IF A TASK IS TO TAKE LONGER THAN THREE (3) DAYS, PROVIDE REPORTS FOR EACH DAY. PROVIDE COPIES OF REPORTS TO CONTRACTOR, OWNER, ARCHITECT AND STRUCTURAL ENGINEER OF RECORD. SPECIAL INSPECTOR TO KEEP A NON-COMPLIANCE LIST DOCUMENTING ITEMS INSPECTED NOT MEETING APPROVED CONSTRUCTION DOCUMENTS AND WHEN / HOW RESOLVED.

4. SEE ARCHITECTURAL, MECHANICAL, ELECTRICAL, AND PLUMBING CONSTRUCTION DOCUMENTS FOR ADDITIONAL NON-STRUCTURAL SPECIAL INSPECTION ITEMS.

5. SPECIAL INSPECTION OF SHOP FABRICATED MEMBERS AND ASSEMBLIES SHALL BE IN ACCORDANCE WITH SECTION 1704.2, UNLESS FABRICATOR IS APPROVED TO PERFORM WORK WITHOUT SPECIAL INSPECTION.

6. IN ACCORDANCE WITH IBC CHAPTER 17, THE OWNER OR THE OWNER'S AGENT, OTHER THAN THE CONTRACTOR, SHALL EMPLOY ONE OR MORE APPROVED AGENCIES TO PROVIDE SPECIAL INSPECTIONS AND TESTS, DURING CONSTRUCTION FOR THE TYPES OF WORK LISTED BELOW THESE SPECIAL INSPECTIONS AND TESTS ARE IN ADDITION TO THE INSPECTIONS BY THE BUILDING OFFICIAL IDENTIFIED IN IBC SECTION 110

7. DEFINITIONS:
   * **SPECIAL INSPECTION:** INSPECTION AS HEREIN REQUIRED BY A QUALIFIED SPECIAL INSPECTOR COMPETENT WITH THE MATERIALS, INSTALLATION, FABRICATION, ERECTION OR PLACEMENT OF COMPONENTS AND CONNECTIONS REQUIRING SPECIAL EXPERTISE TO ENSURE COMPLIANCE WITH APPROVED CONSTRUCTION DOCUMENTS AND REFERENCED STANDARDS (SEE SECTION 1704).
   * **CONTINUOUS SPECIAL INSPECTION:** FULL-TIME OBSERVATION OF WORK REQUIRING SPECIAL INSPECTION BY AN APPROVED SPECIAL INSPECTOR WHO IS PRESENT IN THE AREA WHERE THE WORK IS BEING PERFORMED.
   * **PERIODIC SPECIAL INSPECTION:** THE PART-TIME OR INTERMITTENT OBSERVATION OF WORK REQUIRING SPECIAL INSPECTION BY AN APPROVED SPECIAL INSPECTOR WHO IS PRESENT IN THE AREA WHERE THE WORK HAS BEEN OR IS BEING PERFORMED AND AT THE COMPLETION OF THE WORK.

ITEM	DESCRIPTION OF REQUIREMENTS	REQUIRED (YES/NO)
SPECIAL INSPECTION OF STRUCTURAL STEEL	TO BE PERFORMED IN ACCORDANCE WITH CHAPTER N OF AISC 360-10	YES
SPECIAL INSPECTION AND VERIFICATION OF STEEL CONSTRUCTION OTHER THAN STRUCTURAL STEEL	TO BE PERFORMED IN ACCORDANCE WITH IBC SECTION 1705.2	YES
SPECIAL INSPECTIONS AND VERIFICATIONS FOR CONCRETE CONSTRUCTION	TO BE PERFORMED IN ACCORDANCE WITH IBC SECTION 1705.3	YES
SPECIAL INSPECTIONS AND VERIFICATIONS FOR MASONRY CONSTRUCTION	TO BE PERFORMED IN ACCORDANCE WITH IBC SECTION 1705.4 AND REFERENCED STANDARDS	YES
SPECIAL INSPECTIONS AND VERIFICATIONS FOR WOOD CONSTRUCTION	TO BE PERFORMED IN ACCORDANCE WITH IBC SECTION 1705.5	YES
SPECIAL INSPECTIONS AND VERIFICATIONS OF SOILS	TO BE PERFORMED IN ACCORDANCE WITH IBC SECTION 1705.6, THE GEOTECHNICAL REPORT LISTED IN THE GENERAL FOUNDATION NOTES, AND ANY OTHER REQUIREMENTS LISTED IN THE GENERAL FOUNDATION NOTES	YES
SPECIAL INSPECTIONS AND VERIFICATIONS FOR DEEP FOUNDATIONS (DRIVEN PILES, CAST-IN-PLACE, OR HELICAL PILES AS APPLICABLE)	TO BE PERFORMED IN ACCORDANCE WITH IBC SECTIONS 1705.7-1705.9 AS APPLICABLE, THE GEOTECHNICAL REPORT LISTED IN THE GENERAL FOUNDATION NOTES, AND ANY OTHER REQUIREMENTS LISTED IN THE CONSTRUCTION DOCUMENTS	NO
SPECIAL INSPECTIONS FOR WIND RESISTANCE (REQUIRED ONLY FOR Vult= 155MPH OR GREATER IN EXPOSURE CATEGORY B, OR Vult=142MPH OR GREATER IN EXPOSURE CATEGORY C OR D)	TO BE PERFORMED IN ACCORDANCE WITH IBC SECTION 1705.11	NO
SPECIAL INSPECTIONS AND VERIFICATIONS FOR SEISMIC RESISTANCE (REQUIRED FOR STRUCTURES ASSIGNED TO CATEGORIES C, D, E, OR F)	TO BE PERFORMED IN ACCORDANCE WITH ALL APPLICABLE PORTIONS OF IBC SECTIONS 1705.12 AND 1705.13	NO

Chavez-Grieves
consulting engineers, inc.
4700 Lincoln Road NE, Suite 102 • Albuquerque, NM 87109
505-344-4080 • 505-343-8759 fax

STAMP
BENJAMIN L. BURKHARD
NEW MEXICO
26142
PROFESSIONAL ENGINEER
11/03/2023
EXP: 12/31/2024

DYRON MURPHY ARCHITECTS, P.C.
4505 Montbel Place NE, Albuquerque, New Mexico 87107

SHIPROCK PINNACLE HOTEL & RESTAURANT

SHIPROCK, NEW MEXICO

100% CONSTRUCTION DOCUMENTS

ISSUED FOR CONSTRUCTION

NOVEMBER 03, 2023

PROJECT NUMBER	DRAWN BY	PROJ MGR
2022.10	ML/KB	BB/MG

GENERAL STRUCTURAL NOTES

Sheet Title

Sheet Number of

S-003

STUD WALL SCHEDULE

MARK	SIZE	COMMENTS
W1	2X6 @ 16" OC	--
W2	2X6 @ 12" OC	--
W3	DOUBLE 2X6 @ 16" OC	ADDITIONAL STRESS REQUIREMENT: FB=1100 PSI, FC=1350 PSI
W4	DOUBLE 2X6 @ 12" OC	ADDITIONAL STRESS REQUIREMENT: FB=1100 PSI, FC=1350 PSI

STUD WALL LEGEND

INDICATES SHEAR WALL

INDICATES LOAD BEARING

INDICATES SIDE OF SHEAR WALL WITH STRUCTURAL SHEATHING

GENERAL SHEET NOTES

1. SOME SHEET KEYNOTES MAY NOT APPLY TO THIS SHEET.
2. REFERENCE FINISH FLOOR ELEVATION 100'-0" = MEAN SEA FINISH FLOOR ELEVATION. SEE CIVIL DRAWINGS.
3. PROVIDE BLOCKOUTS AT ALL COLUMNS UNLESS NOTED OTHERWISE.
4. DIMENSIONS ARE TO THE FACE OF CONCRETE OR GRID LINE UNLESS NOTED OTHERWISE.
5. SEE ARCHITECTURAL DRAWINGS FOR MASONRY DIMENSIONS NOT SHOWN.
6. PROVIDE SLAB JOINTS AT 15' - 0" ON CENTER MAXIMUM. THE AREA OF THE CONTROL JOINT SHALL NOT EXCEED A 2.1 RATIO. CONTROL JOINTS SHALL BE LOCATED AT COLUMN LINES WHERE THE LAYOUT PERMITS. AT RE-ENTRANT CORNERS THAT DO NOT HAVE CONTROL JOINTS, PROVIDE 2-#4 x 3'-0" DIAGONAL TO THE RE-ENTRANT CORNER.
7. SEE SHEET S-601 FOR SCHEDULES.

SHEET KEYNOTES

1. 1'-6" THICK ELEVATOR PIT MAT REINFORCE WITH #7 AT 12" ON CENTER EACH WAY T+B. ELEVATION OF ELEVATOR PIT TO BE CONFIRMED WITH ELEVATOR FINAL ELEVATOR SHOP DRAWINGS.
2. SHEAR WALL HOLD DOWN SEE DETAIL C2 /S-603 .
3. SLAB DEPRESSION. SEE ARCHITECTURAL DRAWINGS FOR EXACT SIZE AND LOCATION.
4. EXPOSED CONCRETE FLOOR. SLOPE CONCRETE TO FLOOR DRAIN. SEE ARCHITECTURAL DRAWINS FOR EXACT SIZE AND LOCATION.
5. HOUSEKEEPING PAD, SEE ARCHITECTURAL AND PLUMBING DRAWINGS FOR EXACT SIZE AND LOCATION. SEE DETAIL C2 /S-701 FOR MORE INFORMATION.
6. ADDITIONAL HOLD DOWN ON EACH SIDE OF THE OPENING. TYP AT ALL DOOR OPENINGS.
7. SEE DETAIL D1 /S-501 FOR THICKENED SECTION OF STEM WALL AT HOLD DOWN ANCHORS. TYPICAL AT ALL SHEAR WALLS.

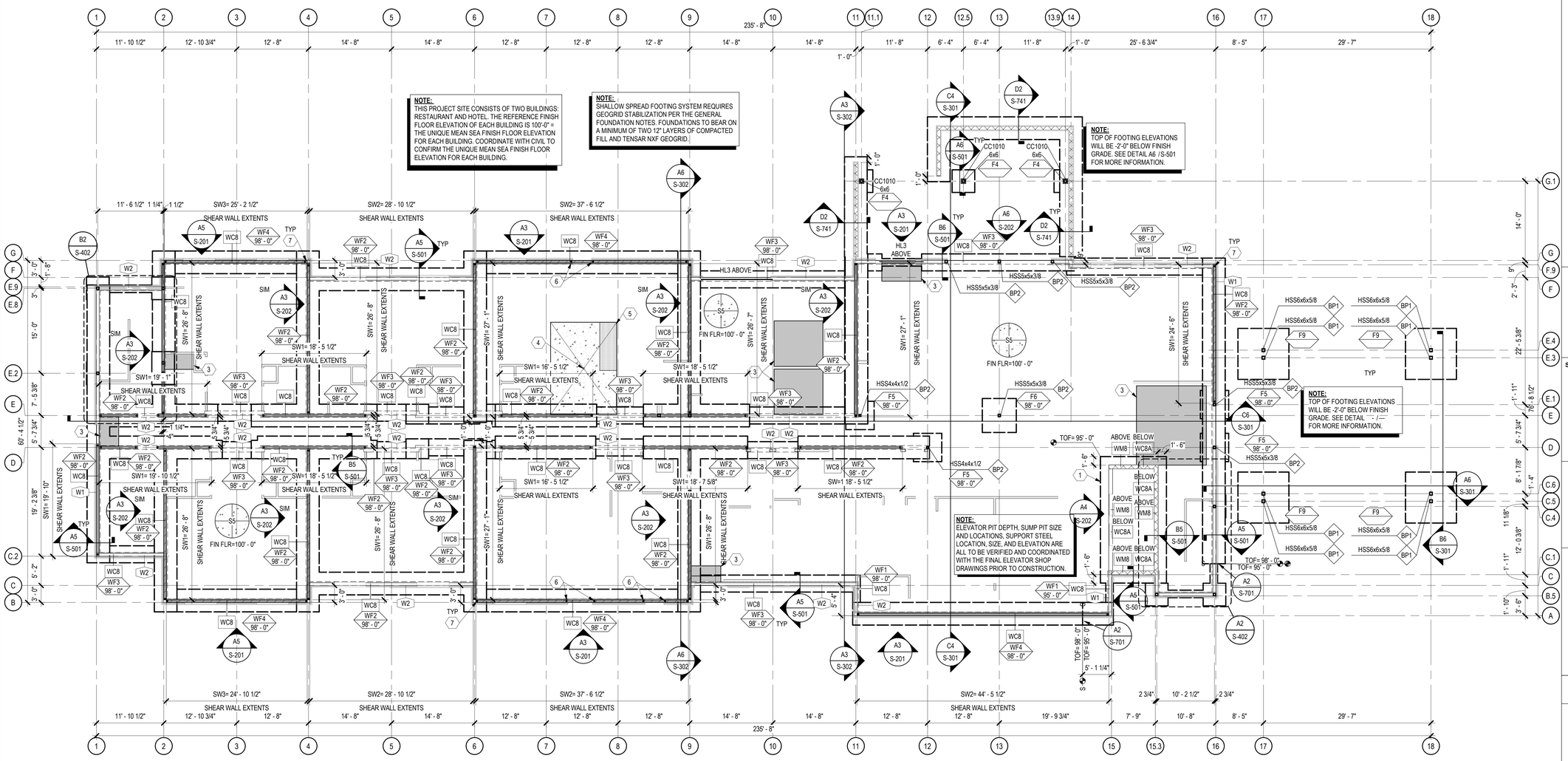

A6 FOUNDATION PLAN - HOTEL
SCALE: 1/8" = 1'-0"

Chavez-Grieves consulting engineers, inc.
4500 Lincoln Road NE, Albuquerque, NM 87109
505-884-8885 • 505-843-9738 fax

STAMP

BENJAMIN L. BURKHARD
NEW MEXICO
26142
PROFESSIONAL ENGINEER
11/03/2023
EXP: 12/31/2024

DYRON MURPHY ARCHITECTS, P.C.
4505 Montbel Place NE, Albuquerque, New Mexico 87107

SHIPROCK PINNACLE HOTEL & RESTAURANT

SHIPROCK, NEW MEXICO

100% CONSTRUCTION DOCUMENTS

ISSUED FOR CONSTRUCTION

NOVEMBER 03, 2023

PROJECT NUMBER	DRAWN BY	PROJ MGR
2022.10	ML / THF	BB/MG

FOUNDATION PLAN - HOTEL

Sheet Title

Sheet Number of

S-101

11/3/2023 5:56:29 PM C:\Revit Projects\M07-198 Shiprock Pinnacle_Hotel_STRUCT_Bhagat.rvt

DYRON MURPHY ARCHITECTS, P.C.

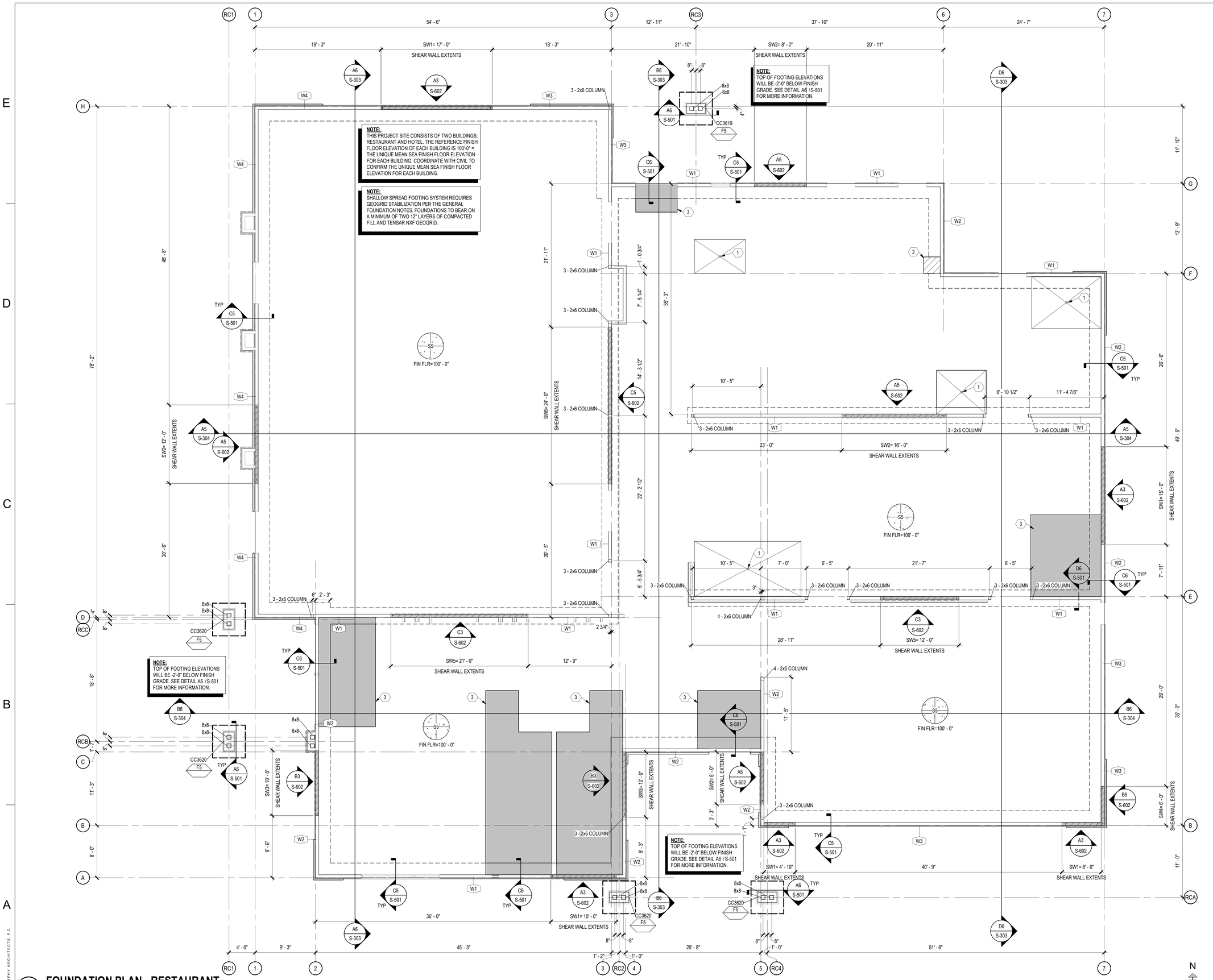

A4 FOUNDATION PLAN - RESTAURANT
SCALE: 3/16" = 1'-0"

GENERAL SHEET NOTES

1. SOME SHEET KEYNOTES MAY NOT APPLY TO THIS SHEET.
2. REFERENCE FINISH FLOOR ELEVATION 100'-0" = MEAN SEA FINISH FLOOR ELEVATION. SEE CIVIL DRAWINGS.
3. DIMENSIONS ARE TO THE FACE OF CONCRETE OR GRID LINE UNLESS NOTED OTHERWISE.
4. PROVIDE SLAB JOINTS AT 15' - 0" ON CENTER MAXIMUM. THE AREA OF THE CONTROL JOINT SHALL NOT EXCEED A 2.1 RATIO. CONTROL JOINTS SHALL BE LOCATED AT COLUMN LINES WHERE THE LAYOUT PERMITS. AT RE-ENTRANT CORNERS THAT DO NOT HAVE CONTROL JOINTS, PROVIDE 2-#4 x 3'-0" DIAGONAL TO THE RE-ENTRANT CORNER.
5. DASHED LINES AT SHEAR WALL INDICATE SHEATHED FACES.
6. SEE SHEET S-601 FOR SCHEDULES.
7. SEE SHEET S-501 FOR TYPICAL FOUNDATION DETAILS
8. SEE SHEET 700 SERIES FOR TYPICAL DETAILS
9. SEE ARCH FOR LOCATIONS AND SIZES OF NON-STRUCTURAL PARTITION WALLS NOT SHOWN.

SHEET KEYNOTES

1. FLOOR DRAIN, SLOPE SLAB TO DRAIN 1/8" PER FOOT. COORDINATE EXACT SIZE AND LOCATION WITH ARCHITECTURAL AND MECHANICAL DRAWINGS.
2. HOUSEKEEPING PAD, SEE ARCHITECTURAL AND PLUMBING DRAWINGS FOR EXACT SIZE AND LOCATION. SEE DETAIL C2/S-701 FOR MORE INFORMATION.
3. SLAB DEPRESSION. SEE ARCHITECTURAL DRAWINGS FOR EXACT SIZE AND LOCATION.

WX STUD WALL SCHEDULE

MARK	SIZE	COMMENTS
W1	2X6 @ 16" OC	--
W2	2X6 @ 12" OC	--
W3	DOUBLE 2X6 @ 16" OC	ADDITIONAL STRESS REQUIREMENT: FB=1100 PSI, FC=1350 PSI
W4	DOUBLE 2X6 @ 12" OC	ADDITIONAL STRESS REQUIREMENT: FB=1100 PSI, FC=1350 PSI

STUD WALL LEGEND

INDICATES SHEAR WALL
INDICATES LOAD BEARING
INDICATES SIDE OF SHEAR WALL WITH STRUCTURAL SHEATHING

Chavez-Grieves consulting engineers, inc.
4100 Lincoln Road NE, Suite 100 • Albuquerque, NM 87108
505-344-4080 • 505-343-8703 fax

STAMP
BENJAMIN L. BURKHARD
NEW MEXICO
26142
PROFESSIONAL ENGINEER
11/03/2023
EXP: 12/31/2024

DYRON MURPHY ARCHITECTS, P.C.
4505 Montbel Place NE, Albuquerque, New Mexico 87107

SHIPROCK PINNACLE HOTEL & RESTAURANT

SHIPROCK, NEW MEXICO
100% CONSTRUCTION DOCUMENTS
ISSUED FOR CONSTRUCTION
NOVEMBER 03, 2023

PROJECT NUMBER	DRAWN BY	PROJ MGR
2022.10	ML / KB	BB/MG

FOUNDATION PLAN - RESTAURANT

Sheet Title
Sheet Number
of

S-102

1/13/2023 6:56:32 PM C:\Revit Projects\A001-108 Shiprock Pinnacle_Hotel_STRUCT_Bryan.rvt
DYRON MURPHY ARCHITECTS, P.C.

(WX) STUD WALL SCHEDULE

MARK	SIZE	COMMENTS
W1	2X6 @ 16" OC	--
W2	2X6 @ 12" OC	--
W3	DOUBLE 2X6 @ 16" OC	ADDITIONAL STRESS REQUIREMENT: FB=1100 PSI, FC=1350 PSI
W4	DOUBLE 2X6 @ 12" OC	ADDITIONAL STRESS REQUIREMENT: FB=1100 PSI, FC=1350 PSI

STUD WALL LEGEND

INDICATES SHEAR WALL

INDICATES LOAD BEARING

INDICATES SIDE OF SHEAR WALL WITH STRUCTURAL SHEATHING

GENERAL SHEET NOTES

1. SOME SHEET KEYNOTES MAY NOT APPLY TO THIS SHEET.
2. LATERAL STABILITY OF THE WOOD FRAME IS DEPENDENT UPON THE STUD SHEAR WALLS. IN THE FINAL CONSTRUCTION CONDITION, THE FRAMING CONTRACTORS SHALL PROVIDE TEMPORARY BRACING IN ACCORDANCE WITH STANDARD PRACTICES.
3. DIMENSIONS ARE TO THE FACE OF CONCRETE, MASONRY, STUD OR GRID LINE UNLESS NOTED OTHERWISE.
4. PRE-ENGINEERED TRUSSES ARE SPACED AT 2'-0" ON CENTER UNLESS NOTED OTHERWISE.
5. SEE ARCHITECTURAL DRAWINGS FOR MASONRY DIMENSIONS NOT SHOWN.
6. WOOD STUDS SHALL BE SPACED AT 16" ON CENTER UNLESS NOTED OTHERWISE.
7. SEE SHEET S-601 FOR SCHEDULES.
8. SEE SHEET S-511 AND S-512 FOR WOOD FRAMING DETAILS.
9. SEE SHEET 700 SERIES FOR TYPICAL DETAILS.
10. SEE WOOD FRAMING NOTES IN GENERAL STRUCTURAL NOTES FOR WOOD SPECIES AND GRADE.

SHEET KEYNOTES

1. 3/4" APA RATED FLOOR SHEATHING, EXPOSURE 1, UNDER 1" GYPCRETE. ATTACH TO FLOOR JOISTS WITH #10 SCREWS AT 6" ON CENTER ALONG EDGES AND 6" IN THE FIELD.
2. 24" DEEP PRE-ENGINEERED TRUSSES AT 24" ON CENTER. TRUSS DESIGNER TO DESIGN TRUSSES FOR 18 PSF FLOOR LIVE LOAD PLUS 15 PSF PARTITION LOADING AS APPLICABLE.
3. 2X10 AT 24" ON CENTER
4. 2X8 AT 24" ON CENTER
5. 2X6 AT 24" ON CENTER
6. MECHANICAL SHAFT OPENING. WOOD TRUSS MANUFACTURER TO DESIGN AND PROVIDE TRANSFER TRUSS AS REQUIRED.
7. BLOCKING TRUSS PER A2 / S-511 ATTACH TOP CHORD TO FLOOR SHEATHING PER TYPICAL DECK ATTACHMENT.
8. 5.5 x 24 GLULAM

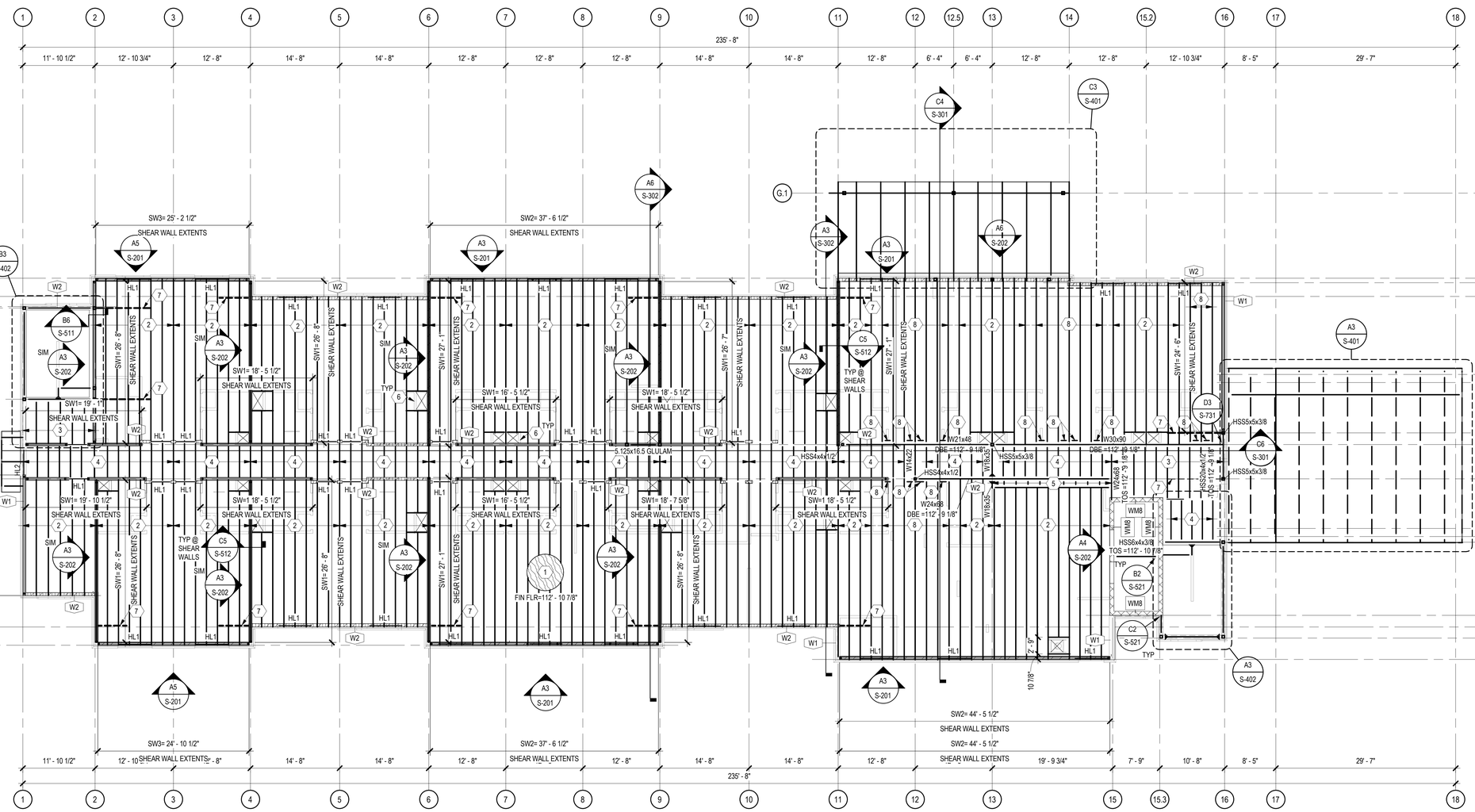

A6 HOTEL 2ND FLOOR FRAMING PLAN
SCALE: 1/8" = 1'-0"

Chavez-Grieves consulting engineers, inc.
4700 Lincoln Road NE, Suite 102 • Albuquerque, NM 87109
505-344-4080 • 505-343-8759 fax

STAMP

BENJAMIN L. BURKHARD
NEW MEXICO
26142
PROFESSIONAL ENGINEER
11/03/2023
EXP. 12/31/2024

DYRON MURPHY ARCHITECTS, P.C.
4505 Montbel Place NE, Albuquerque, New Mexico 87107

SHIPROCK PINNACLE HOTEL & RESTAURANT

SHIPROCK, NEW MEXICO

100% CONSTRUCTION DOCUMENTS

ISSUED FOR CONSTRUCTION

NOVEMBER 03, 2023

PROJECT NUMBER	DRAWN BY	PROJ MGR
2022.10	ML / THF	BB/MG

HOTEL 2ND FLOOR FRAMING PLAN

Sheet Title

Sheet Number of

S-111

11/3/2023 6:58:36 PM C:\Revit Projects\M07-16B Shiprock Pinnacle_Hotel_STRUCT_Bhagat.rvt
DYRON MURPHY ARCHITECTS, P.C.

WX STUD WALL SCHEDULE

MARK	SIZE	COMMENTS
W1	2X6 @ 16" OC	--
W2	2X6 @ 12" OC	--
W3	DOUBLE 2X6 @ 16" OC	ADDITIONAL STRESS REQUIREMENT: FB=1100 PSI, FC=1350 PSI
W4	DOUBLE 2X6 @ 12" OC	ADDITIONAL STRESS REQUIREMENT: FB=1100 PSI, FC=1350 PSI

STUD WALL LEGEND

INDICATES SHEAR WALL

INDICATES LOAD BEARING

INDICATES SIDE OF SHEAR WALL WITH STRUCTURAL SHEATHING

GENERAL SHEET NOTES

1. SOME SHEET KEYNOTES MAY NOT APPLY TO THIS SHEET.
2. LATERAL STABILITY OF THE WOOD FRAME IS DEPENDENT UPON THE STUD SHEAR WALLS. IN THE FINAL CONSTRUCTION CONDITION, THE FRAMING CONTRACTORS SHALL PROVIDE TEMPORARY BRACING IN ACCORDANCE WITH STANDARD PRACTICES.
3. DIMENSIONS ARE TO THE FACE OF CONCRETE, MASONRY, STUD OR GRID LINE UNLESS NOTED OTHERWISE.
4. PRE-ENGINEERED TRUSSES ARE SPACED AT 2'-0" ON CENTER UNLESS NOTED OTHERWISE.
5. SEE ARCHITECTURAL DRAWINGS FOR MASONRY DIMENSIONS NOT SHOWN.
6. WOOD STUDS SHALL BE SPACED AT 16" ON CENTER UNLESS NOTED OTHERWISE.
7. SEE SHEET S-601 FOR SCHEDULES.
8. SEE SHEET S-511 AND S-512 FOR WOOD FRAMING DETAILS.
9. SEE SHEET 700 SERIES FOR TYPICAL DETAILS.
10. SEE WOOD FRAMING NOTES IN GENERAL STRUCTURAL NOTES FOR WOOD SPECIES AND GRADE.

SHEET KEYNOTES

1. 3/4" APA RATED FLOOR SHEATHING, EXPOSURE 1, UNDER 1" GYPCRETE. ATTACH TO FLOOR JOISTS WITH #10 SCREWS AT 6" ON CENTER ALONG EDGES AND 6" IN THE FIELD.
2. 24" DEEP PRE-ENGINEERED TRUSSES AT 24" ON CENTER. TRUSS DESIGNER TO DESIGN TRUSSES FOR 18 PSF FLOOR LIVE LOAD PLUS 15 PSF PARTITION LOADING AS APPLICABLE.
3. 2X10 AT 24" ON CENTER
4. 2X8 AT 24" ON CENTER
5. 2X6 AT 24" ON CENTER
6. MECHANICAL SHAFT OPENING. WOOD TRUSS MANUFACTURER TO DESIGN AND PROVIDE TRANSFER TRUSS AS REQUIRED.
7. BLOCKING TRUSS PER A2 / S-511 ATTACH TOP CHORD TO FLOOR SHEATHING PER TYPICAL DECK ATTACHMENT.
8. 5.5 x 24 GLULAM

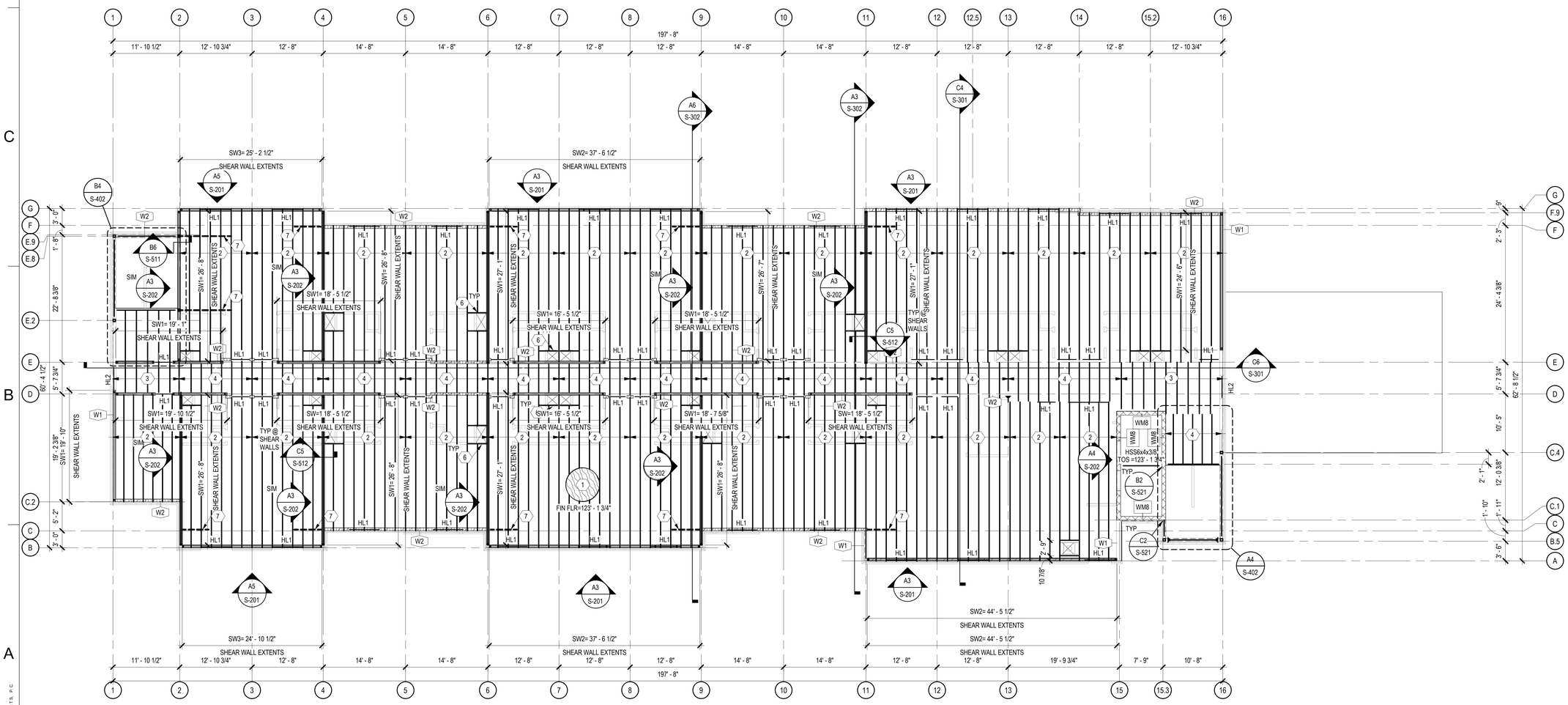

A6 HOTEL 3RD FLOOR FRAMING PLAN
SCALE: 1/8" = 1'-0"

Chavez-Grieves consulting engineers, inc.
4700 Lincoln Road NE, Suite 101 • Albuquerque, NM 87109
505-344-4080 • 505-343-8759 fax

STAMP

BENJAMIN L. BURKHARD
NEW MEXICO
26142
PROFESSIONAL ENGINEER
11/03/2023
EXP: 12/31/2024

DYRON MURPHY ARCHITECTS, P.C.
4505 Montbel Place NE, Albuquerque, New Mexico 87107

SHIPROCK PINNACLE HOTEL & RESTAURANT

SHIPROCK, NEW MEXICO

100% CONSTRUCTION DOCUMENTS

ISSUED FOR CONSTRUCTION

NOVEMBER 03, 2023

PROJECT NUMBER	DRAWN BY	PROJ MGR
2022.10	ML / THF	BB/MG

HOTEL 3RD FLOOR FRAMING PLAN

Sheet Title

Sheet Number of

S-112

C:\Revit Projects\M07-198 Shiprock Pinnacle_Hotel_STRUCT_Bingua.rvt
11/3/2023 6:58:39 PM
DYRON MURPHY ARCHITECTS, P.C.

WX STUD WALL SCHEDULE

MARK	SIZE	COMMENTS
W1	2X6 @ 16" OC	--
W2	2X6 @ 12" OC	--
W3	DOUBLE 2X6 @ 16" OC	ADDITIONAL STRESS REQUIREMENT: FB=1100 PSI, FC=1350 PSI
W4	DOUBLE 2X6 @ 12" OC	ADDITIONAL STRESS REQUIREMENT: FB=1100 PSI, FC=1350 PSI

STUD WALL LEGEND

INDICATES SHEAR WALL

INDICATES LOAD BEARING

INDICATES SIDE OF SHEAR WALL WITH STRUCTURAL SHEATHING

GENERAL SHEET NOTES

1. SOME SHEET KEYNOTES MAY NOT APPLY TO THIS SHEET.
2. LATERAL STABILITY OF THE WOOD FRAME IS DEPENDENT UPON THE STUD SHEAR WALLS. IN THE FINAL CONSTRUCTION CONDITION, THE FRAMING CONTRACTORS SHALL PROVIDE TEMPORARY BRACING IN ACCORDANCE WITH STANDARD PRACTICES.
3. DIMENSIONS ARE TO THE FACE OF CONCRETE, MASONRY, STUD OR GRID LINE UNLESS NOTED OTHERWISE.
4. PRE-ENGINEERED TRUSSES ARE SPACED AT 2'-0" ON CENTER UNLESS NOTED OTHERWISE.
5. SEE ARCHITECTURAL DRAWINGS FOR MASONRY DIMENSIONS NOT SHOWN.
6. WOOD STUDS SHALL BE SPACED AT 16" ON CENTER UNLESS NOTED OTHERWISE.
7. SEE SHEET S-601 FOR SCHEDULES.
8. SEE SHEET S-511 AND S-512 FOR WOOD FRAMING DETAILS.
9. SEE SHEET 700 SERIES FOR TYPICAL DETAILS.
10. SEE WOOD FRAMING NOTES IN GENERAL STRUCTURAL NOTES FOR WOOD SPECIES AND GRADE.

SHEET KEYNOTES

1. 3/4" APA RATED FLOOR SHEATHING, EXPOSURE 1, UNDER 1" GYPCRETE. ATTACH TO FLOOR JOISTS WITH #10 SCREWS AT 6" ON CENTER ALONG EDGES AND 6" IN THE FIELD.
2. 24" DEEP PRE-ENGINEERED TRUSSES AT 24" ON CENTER. TRUSS DESIGNER TO DESIGN TRUSSES FOR 18 PSF FLOOR LIVE LOAD PLUS 15 PSF PARTITION LOADING AS APPLICABLE.
3. 2X10 AT 24" ON CENTER
4. 2X8 AT 24" ON CENTER
5. 2X6 AT 24" ON CENTER
6. MECHANICAL SHAFT OPENING. WOOD TRUSS MANUFACTURER TO DESIGN AND PROVIDE TRANSFER TRUSS AS REQUIRED.
7. BLOCKING TRUSS PER A2 / S-511 ATTACH TOP CHORD TO FLOOR SHEATHING PER TYPICAL DECK ATTACHMENT.
8. 5.5 x 24 GLULAM

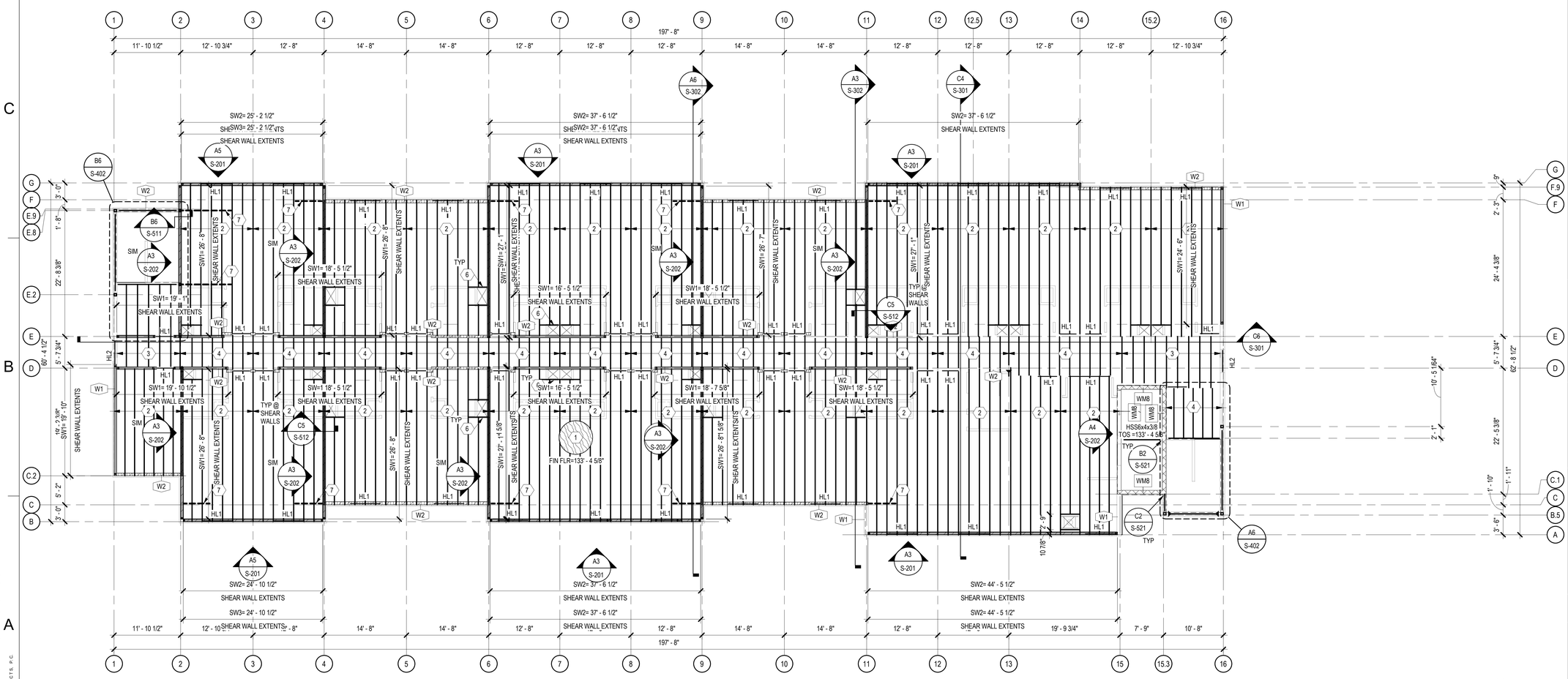

A6 HOTEL 4TH FLOOR FRAMING PLAN

SCALE: 1/8" = 1'-0"

Chavez-Grieves consulting engineers, inc.

STAMP

BENJAMIN L. BURKHARD NEW MEXICO 26142 PROFESSIONAL ENGINEER

11/03/2023 EXP: 12/31/2024

DYRON MURPHY ARCHITECTS, P.C.

4505 Montbel Place NE, Albuquerque, New Mexico 87107

SHIPROCK PINNACLE HOTEL & RESTAURANT

SHIPROCK, NEW MEXICO

100% CONSTRUCTION DOCUMENTS

ISSUED FOR CONSTRUCTION

NOVEMBER 03, 2023

PROJECT NUMBER	DRAWN BY	PROJ MGR
2022.10	ML / THF	BB/MG

HOTEL 4TH FLOOR FRAMING PLAN

Sheet Title

Sheet Number of

S-113

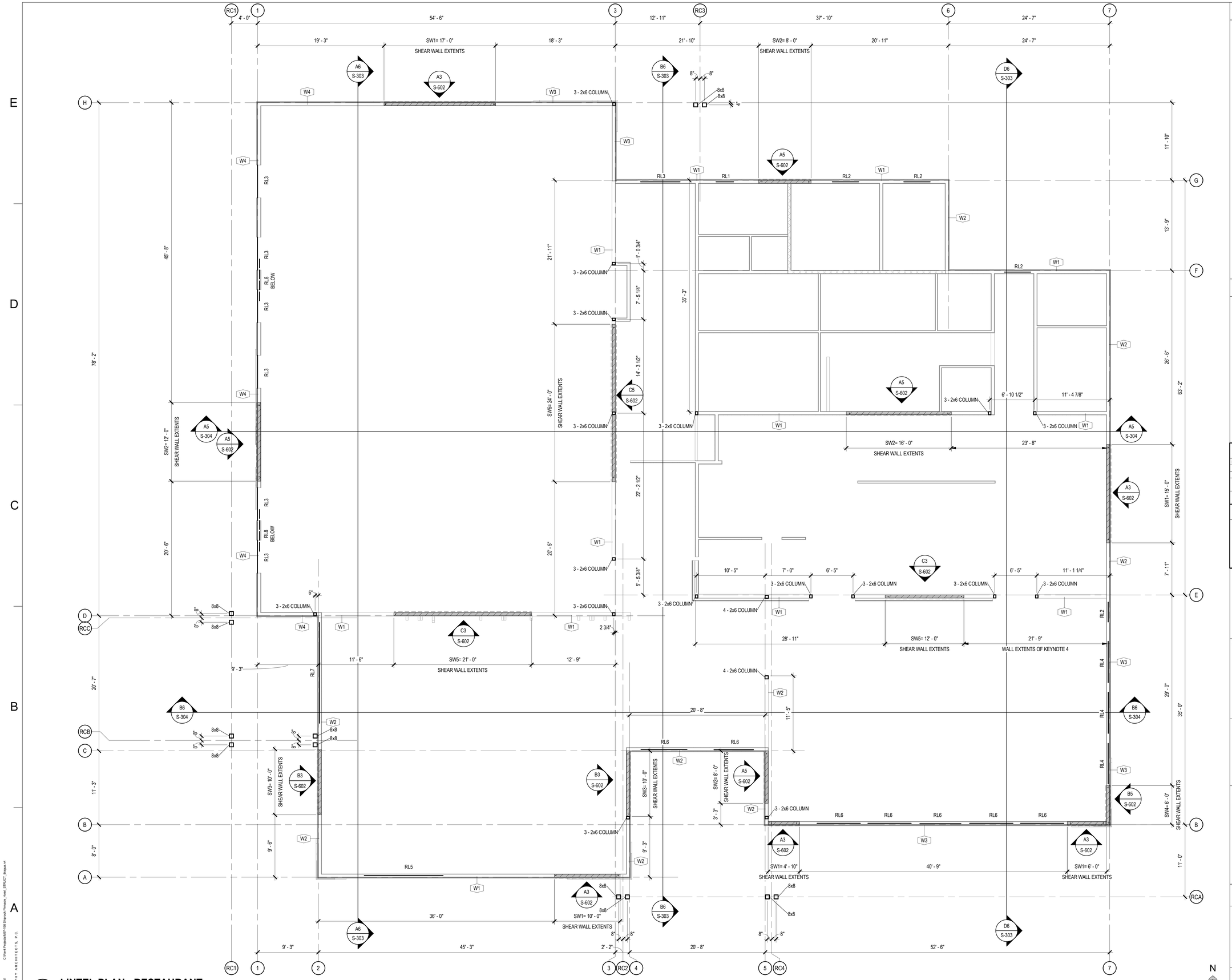

A4 **LINTEL PLAN - RESTAURANT**
SCALE: 3/16" = 1'-0"

GENERAL SHEET NOTES

1. SOME SHEET KEYNOTES MAY NOT APPLY TO THIS SHEET.
2. NOTE TO ERECTOR: LATERAL STABILITY OF THE WOOD FRAME IS DEPENDENT UPON THE SHEAR WALLS. THE ERECTOR SHALL PROVIDE TEMPORARY BRACING OF THE STRUCTURE NECESSARY FOR CONSTRUCTION.
3. DIMENSIONS ARE TO THE FACE OF WOOD UNLESS NOTED OTHERWISE.
4. WALL STUD SPACING OF STRUCTURAL WALLS ARE SHOWN ON THIS SHEET. FOR SHEAR WALL STUD SPACINGS, SEE SHEAR WALL ELEVATIONS ON SHEET S-602 FOR STUD SPACINGS OF NON STRUCTURAL WALLS, SEE ARCH.
5. DASHED LINES AT SHEAR WALLS INDICATE SHEATHED FACES.
6. LOCATIONS OF RESTAURANT LINTELS SHOWN ARE APPROXIMATE. COORDINATE EXACT LOCATIONS WITH LOCATION OF ASSOCIATED OPENINGS PER ARCH DRAWINGS.
7. SEE SHEET 700 SERIES FOR TYPICAL DETAILS.
8. SEE SHEET S-511 AND S-512 FOR TYPICAL FRAMING DETAILS.
9. SEE SHEET S-601 FOR SCHEDULES.
10. SEE LINTEL SCHEDULE ON SHEET S-601 FOR LINTEL SIZES AND BEARING STUD REQUIREMENTS.

SHEET KEYNOTES

1. 2x6 STUDS AT 16" ON CENTER.
2. 2x6 STUDS AT 12" ON CENTER.
3. 2x6 STUDS AT 8" ON CENTER.
4. 2x6 STUDS @ 6" ON CENTER.

WX STUD WALL SCHEDULE

MARK	SIZE	COMMENTS
W1	2X6 @ 16" OC	--
W2	2X6 @ 12" OC	--
W3	DOUBLE 2X6 @ 16" OC	ADDITIONAL STRESS REQUIREMENT: FB=1100 PSI, FC=1350 PSI
W4	DOUBLE 2X6 @ 12" OC	ADDITIONAL STRESS REQUIREMENT: FB=1100 PSI, FC=1350 PSI

STUD WALL LEGEND

INDICATES SHEAR WALL

INDICATES LOAD BEARING

INDICATES SIDE OF SHEAR WALL WITH STRUCTURAL SHEATHING

Chavez-Grieves consulting engineers, inc.
4700 Lincoln Road NE, Suite 100 • Albuquerque, NM 87109
505-344-4080 • 505-343-8759 fax

STAMP

BENJAMIN L. BURKHARD
NEW MEXICO
26142
PROFESSIONAL ENGINEER
11/03/2023
EXP: 12/31/2024

DYRON MURPHY ARCHITECTS, P.C.
4505 Montbel Place NE, Albuquerque, New Mexico 87107

SHIPROCK PINNACLE HOTEL & RESTAURANT

SHIPROCK, NEW MEXICO

100% CONSTRUCTION DOCUMENTS

ISSUED FOR CONSTRUCTION

NOVEMBER 03, 2023

PROJECT NUMBER	DRAWN BY	PROJ MGR
2022.10	ML / KB	BB/MG

LINTEL PLAN - RESTAURANT

Sheet Title

Sheet Number of

S-114

STUD WALL SCHEDULE

MARK	SIZE	COMMENTS
W1	2X6 @ 16" OC	--
W2	2X6 @ 12" OC	--
W3	DOUBLE 2X6 @ 16" OC	ADDITIONAL STRESS REQUIREMENT: FB=1100 PSI, FC=1350 PSI
W4	DOUBLE 2X6 @ 12" OC	ADDITIONAL STRESS REQUIREMENT: FB=1100 PSI, FC=1350 PSI

STUD WALL LEGEND

INDICATES SHEAR WALL

INDICATES LOAD BEARING

INDICATES SIDE OF SHEAR WALL WITH STRUCTURAL SHEATHING

GENERAL SHEET NOTES

1. SOME SHEET KEYNOTES MAY NOT APPLY TO THIS SHEET.
2. LATERAL STABILITY OF THE WOOD FRAME IS DEPENDENT UPON THE STUD SHEAR WALL. IN THE FINAL CONSTRUCTION CONDITION, THE FRAMING CONTRACTOR SHALL PROVIDE TEMPORARY BRACING IN ACCORDANCE WITH STANDARD PRACTICES,
3. DIMENSIONS ARE TO THE FACE OF STUD UNLESS NOTED OTHERWISE.
4. PRE-ENGINEERED TRUSSES ARE SPACED AT 2'-0" ON CENTER UNLESS NOTED OTHERWISE. TRUSS MFG TO PROVIDE TYPICAL TRUSS BRACING AT THIRD POINTS, TYPICAL.
5. WOOD ROOF TRUSS MANUFACTURER SHALL DESIGN WOOD TRUSSES SUPPORTING MECHANICAL UNITS FOR 1.2x MECHANICAL UNIT WEIGHT SHOWN. USE 15 PSF DEAD LOAD AND 20 PSF LIVE LOAD UNLESS NOTED OTHERWISE. CONTRACTOR SHALL VERIFY ACTUAL MECHANICAL LOADS. NOTIFY STEEL JOIST MANUFACTURER OF ANY DISCREPANCIES.
6. WOOD STUDS SHALL BE SPACED AT 16" ON CENTER UNLESS NOTES OTHERWISE..
7. SEE SHEET S-511 AND S-512 FOR TYPICAL ROOF FRAMING DETAILS.
8. SEE SHEET 700 SERIES FOR TYPICAL DETAILS.
9. SEE WOOD FRAMING NOTES IN GENERAL STRUCTURAL NOTES FOR WOOD SPECIES AND GRADE.

SHEET KEYNOTES

1. 3/4" APA RATED FLOOR SHEATHING, EXPOSURE 1. ATTACHED TO ROOF JOIST WITH #10 SCREWS AT 6" ON CENTER ALONG EDGES AND 6" IN THE FIELD.
2. 24" DEEP PRE-ENGINEERED ROOF TRUSSES. TRUSS DESIGNER TO DESIGN TRUSSES FOR 15 PSF DEAD LOAD AND 20 PSF ROOF LIVE LOAD.
3. 2x10 AT 24" ON CENTER.
4. 2x8 AT 24" ON CENTER.
5. ROOF HATCH. SEE ARCHITECTURAL DRAWINGS FOR EXACT SIZE AND LOCATION. TRUSS MANUFACTURER TO DESIGN AND PROVIDE TRANSFER TRUSSES AS REQUIRED

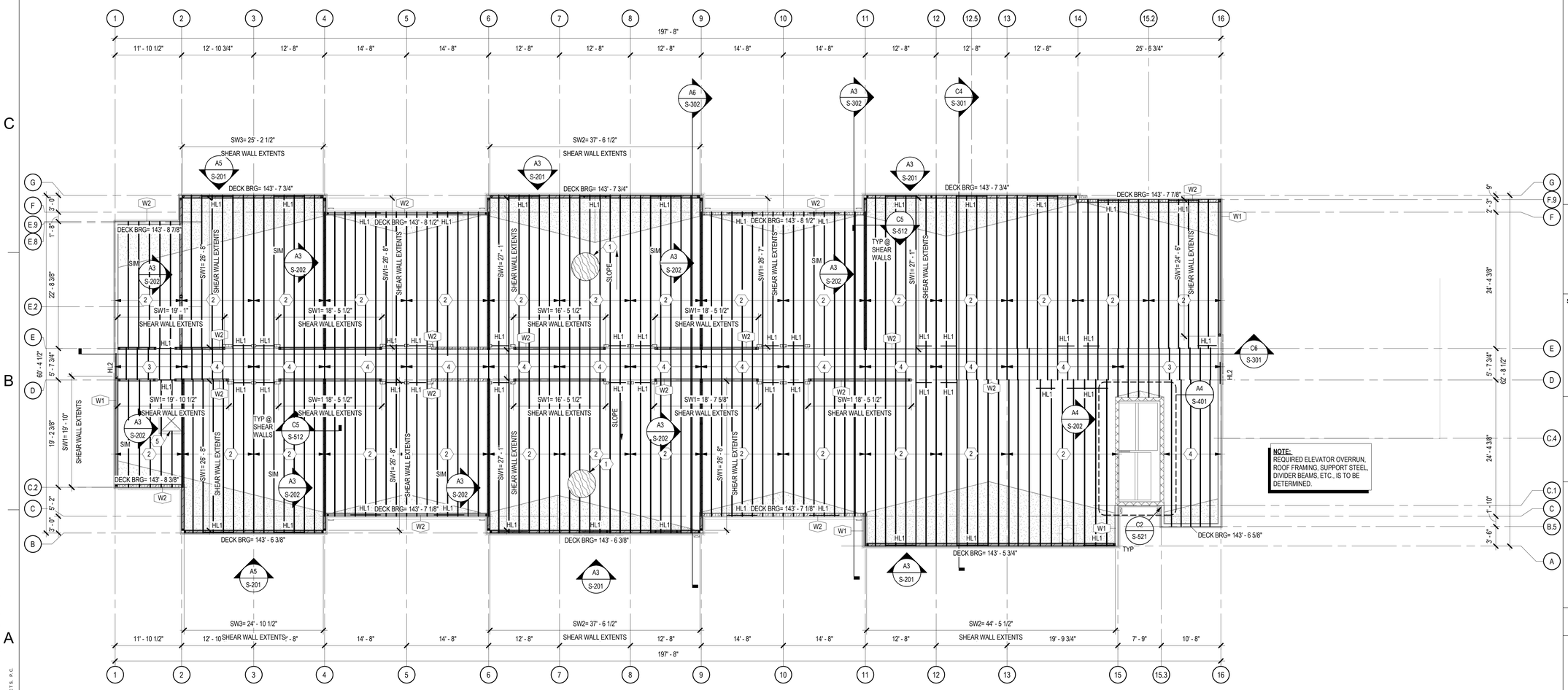

A6 **ROOF FRAMING PLAN**

SCALE: 1/8" = 1'-0"

N

0 4' 8' 16'

Chavez-Grieves consulting engineers, inc.
4700 Lincoln Road NE, Suite 103 • Albuquerque, NM 87109
505-344-4080 • 505-343-8759 fax

STAMP

BENJAMIN L. BURKHARD NEW MEXICO 26142 PROFESSIONAL ENGINEER

11/03/2023
EXP: 12/31/2024

DYRON MURPHY ARCHITECTS, P.C.

4505 Montbel Place NE, Albuquerque, New Mexico 87107

SHIPROCK PINNACLE HOTEL & RESTAURANT

SHIPROCK, NEW MEXICO

100% CONSTRUCTION DOCUMENTS

ISSUED FOR CONSTRUCTION

NOVEMBER 03, 2023

PROJECT NUMBER	DRAWN BY	PROJ MGR
2022.10	ML / THF	BB/MG

ROOF FRAMING PLAN - HOTEL

Sheet Title

Sheet Number of

S-121

11/3/2023 6:58:47 PM C:\Revit Projects\R21-108 Shiprock Pinnacle_Hotel_STRUCT_Rhaps.rvt
DYRON MURPHY ARCHITECTS, P.C.

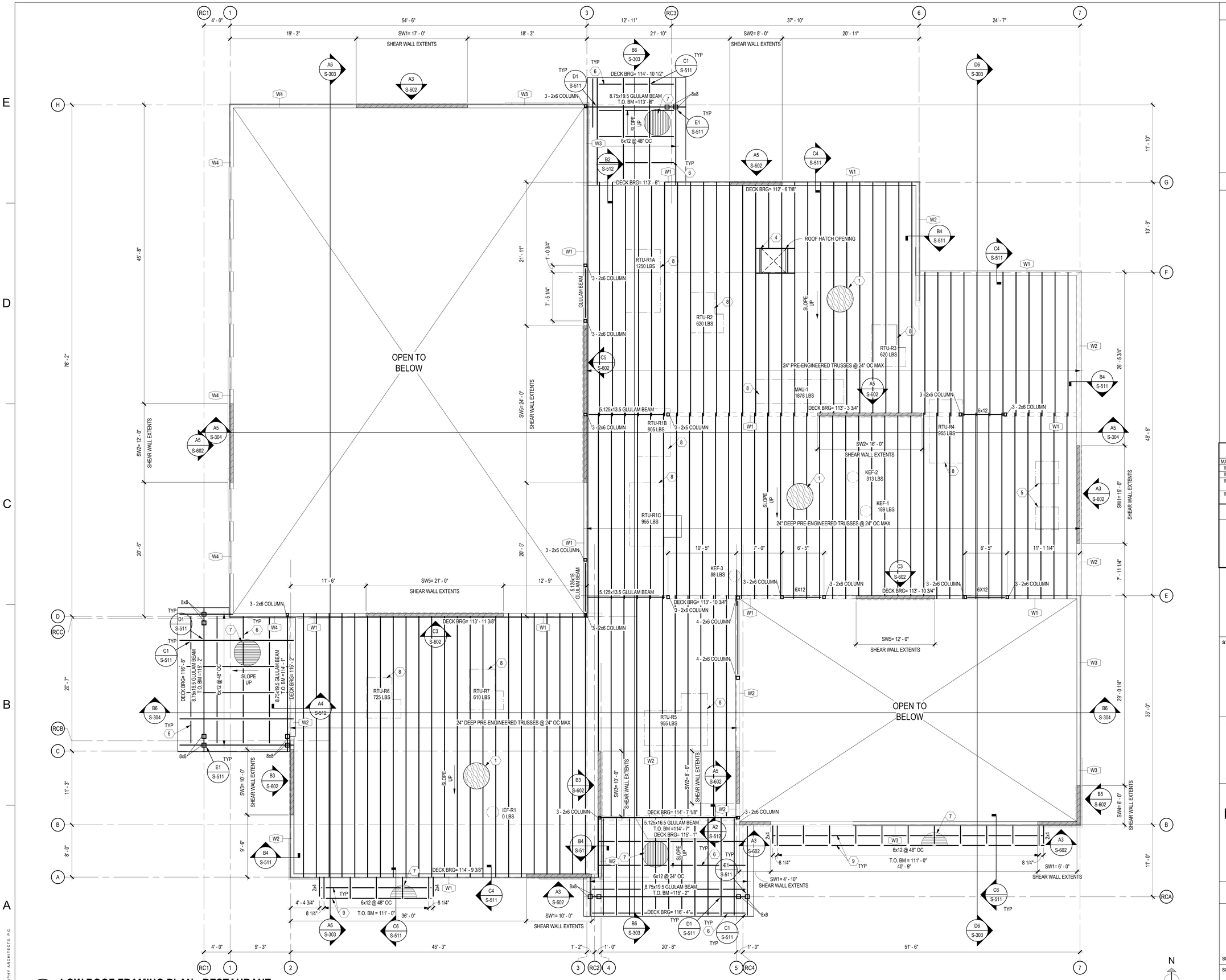

A6 LOW ROOF FRAMING PLAN - RESTAURANT
SCALE: 3/16" = 1'-0"

GENERAL SHEET NOTES

1. SOME SHEET KEYNOTES MAY NOT APPLY TO THIS SHEET.
2. DIMENSIONS ARE TO THE FACE OF STUD OR GRID LINE UNLESS NOTED OTHERWISE.
3. WOOD TRUSS MANUFACTURER SHALL DESIGN ROOF JOISTS AND ROOF JOIST GIRDERS SUPPORTING MECHANICAL UNITS FOR 1.2x MECHANICAL UNIT WEIGHTS SHOWN. USE 15 PSF DEAD LOAD AND 20 PSF LIVE LOAD UNLESS NOTED OTHERWISE. CONTRACTOR SHALL VERIFY ACTUAL MECHANICAL LOADS. NOTIFY WOOD TRUSS MANUFACTURER OF ANY DISCREPANCIES.
4. DASHED LINES AT SHEAR WALLS INDICATE SHEATHED FACES.
5. SEE SHEET S-601 FOR SCHEDULES.
6. TRUSS MANUFACTURER SHALL PROVIDE BLOCKING TRUSSES BETWEEN ALL RESTAURANT ROOF TRUSSES. THIS BLOCKING SHALL OCCUR AT BEARING WALLS AS SHOWN IN A2 /S-511 UNLESS NOTED OTHERWISE. TRUSS MANUFACTURER SHALL PROVIDE TRUSS BRACING AT THIRD POINTS OF SPAN TYPICAL.

SHEET KEYNOTES

1. APA RATED EXPOSURE I 15/32" THICK SHEATHING. MINIMUM SPAN RATING 32/16.BLOCK ALL PANEL EDGES. SECURE TO SUPPORTS AND BLOCKING WITH 8D NAILS AT 4" ON CENTER AT PANEL EDGES, AND 12" ON CENTER IN THE FIELD.
2. APA RATED EXPOSURE I 15/32" THICK SHEATHING INSTALLED OVER 2X TONGUE AND GROOVE DECKING. SECURE SHEATHING TO DECKING WITH 8D NAILS AT 16" ON CENTER AT PANEL EDGES, AND 12" ON CENTER IN THE FIELD. SECURE TONGUE AND GROOVE DECKING TO SUPPORTS PER THE NAILING SCHEDULE ON S-601.
3. NOT USED
4. OPENING FRAMED WITH 2X JOIST AND HEADER TRUSSES BY TRUSS MANUFACTURER PER DETAIL A6 /S-511. SEE ARCH/ MECH FOR EXACT SIZE AND LOCATION OF OPENING.
5. TRUSS MANUFACTURER TO DESIGN FOR BOTTOM CHORD SUPPORTED MECHANICAL UNITS. WEIGHT OF UNIT =130 LBS. UNISTRUT MEMBERS TO SUPPORT THE MECHANICAL UNIT BY CONSTRUCTOR. PLEASE SUBMIT FOR APPROVAL.
6. 2x4 INTERMEDIATE EXTERIOR CANOPY FRAMING AT 4'-0" ON CENTER.
7. APA RATED EXPOSURE I 3/4" THICK SHEATHING. MINIMUM SPAN RATING 48/24. SECURE SHEATHING TO SUPPORTS WITH 8D NAILS AT 6" ON CENTER AT PANEL EDGES AND AT 12" ON CENTER IN THE FIELD.
8. MECHANICAL UNIT WITH OPENINGS SEE MECHANICAL FOR EXACT SIZE AND LOCATION. WHERE OPENINGS DO NOT INTERRUPT TRUSS SPACING, PROVIDE 2X4 FRAMING PER DETAIL B5 /S-511. WHERE OPENINGS INTERRUPT TRUSS SPACING, PROVIDE HEADER TRUSSES BY TRUSS MANUFACTURER AND 2X4 FRAMING PER DETAIL A6 /S-511.
9. 2X4 BLOCKING

WX STUD WALL SCHEDULE

MARK	SIZE	COMMENTS
W1	2X6 @ 16" OC	--
W2	2X6 @ 12" OC	--
W3	DOUBLE 2X6 @ 16" OC	ADDITIONAL STRESS REQUIREMENT: FB=1100 PSI, FC=1350 PSI
W4	DOUBLE 2X6 @ 12" OC	ADDITIONAL STRESS REQUIREMENT: FB=1100 PSI, FC=1350 PSI

STUD WALL LEGEND

INDICATES SHEAR WALL
INDICATES LOAD BEARING
INDICATES SIDE OF SHEAR WALL WITH STRUCTURAL SHEATHING

Chavez-Grieves consulting engineers, inc.
4500 Lincoln Road NE, Suite 320 • Albuquerque, NM 87109
505-344-6080 • 505-343-8759 fax

STAMP

BENJAMIN L. BURKHARD
NEW MEXICO
26142
PROFESSIONAL ENGINEER
11/03/2023
EXP: 12/31/2024

DYRON MURPHY ARCHITECTS, P.C.
4505 Montbel Place NE, Albuquerque, New Mexico 87107

SHIPROCK PINNACLE HOTEL & RESTAURANT

SHIPROCK, NEW MEXICO

100% CONSTRUCTION DOCUMENTS

ISSUED FOR CONSTRUCTION

NOVEMBER 03, 2023

PROJECT NUMBER	DRAWN BY	PROJ MGR
2022.10	ML / KB	BB/MG

LOW ROOF FRAMING PLAN - RESTAURANT

Sheet Title

Sheet Number of

S-122

C:\Revit Projects\N07-108 Shiprock Pinnacle_Hotel_STRUCT_R\ryan.rvt
11/3/2023 6:56:49 PM
DYRON MURPHY ARCHITECTS, P.C.

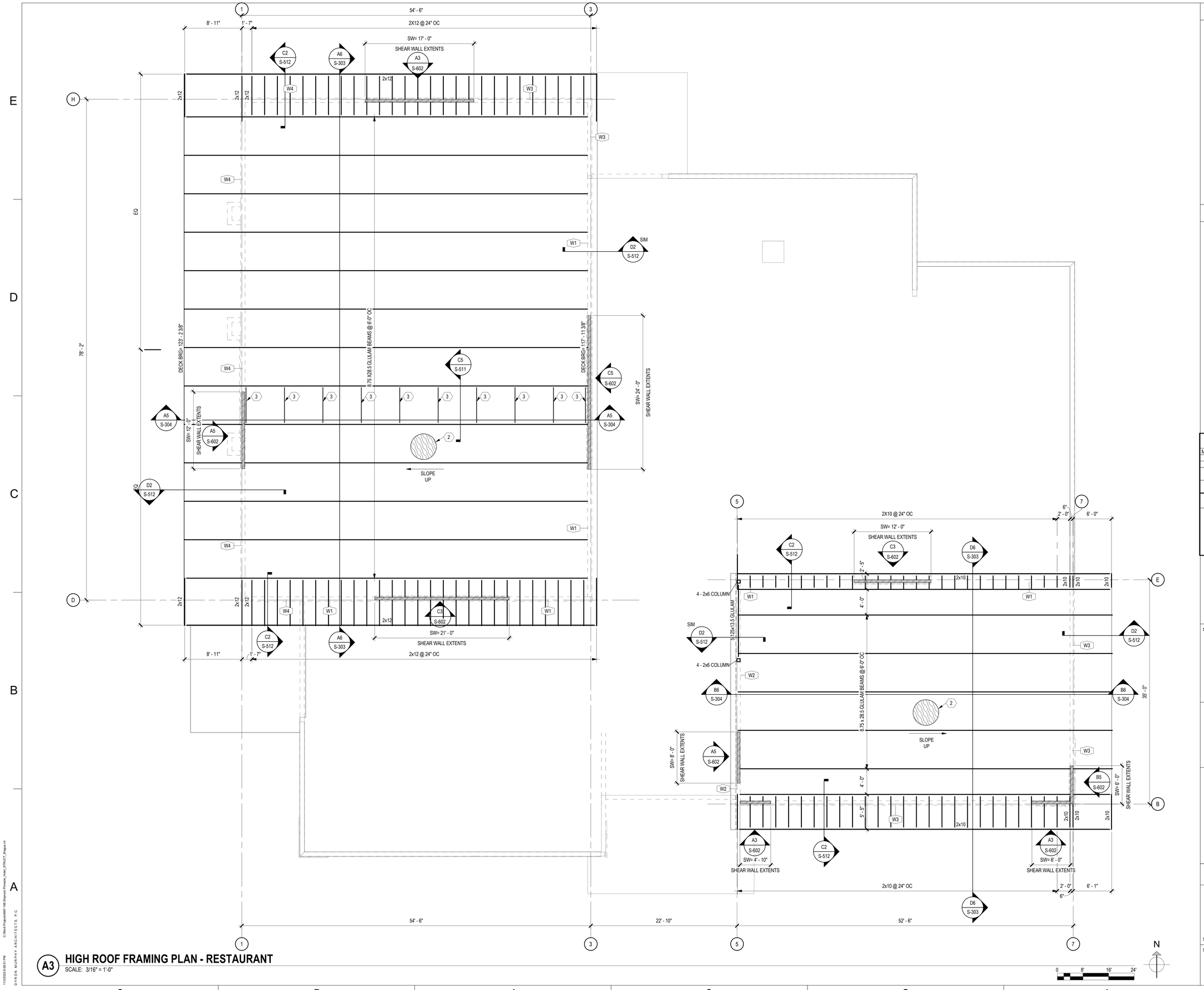

A3 HIGH ROOF FRAMING PLAN - RESTAURANT
SCALE: 3/16" = 1'-0"

GENERAL SHEET NOTES

1. SOME SHEET KEYNOTES MAY NOT APPLY TO THIS SHEET.
2. DIMENSIONS ARE TO THE FACE OF STUD OR GRID LINE UNLESS NOTED OTHERWISE.
3. WOOD TRUSS MANUFACTURER SHALL DESIGN ROOF JOISTS AND ROOF JOIST GIRDERS SUPPORTING MECHANICAL UNITS FOR 1.2x MECHANICAL UNIT WEIGHTS SHOWN. USE 15 PSF DEAD LOAD AND 20 PSF LIVE LOAD UNLESS NOTED OTHERWISE. CONTRACTOR SHALL VERIFY ACTUAL MECHANICAL LOADS. NOTIFY WOOD TRUSS MANUFACTURER OF ANY DISCREPANCIES.
4. DASHED LINES AT SHEAR WALLS INDICATE SHEATHED FACES.
5. SEE SHEET S-601 FOR SCHEDULES.
6. TRUSS MANUFACTURER SHALL PROVIDE BLOCKING TRUSSES BETWEEN ALL RESTAURANT ROOF TRUSSES. THIS BLOCKING SHALL OCCUR AT BEARING WALLS AS SHOWN IN A2 / S-511 UNLESS NOTED OTHERWISE. TRUSS MANUFACTURER SHALL PROVIDE TRUSS BRACING AT THIRD POINTS OF SPAN TYPICAL.

SHEET KEYNOTES

1. APA RATED EXPOSURE I 15/32" THICK SHEATHING. MINIMUM SPAN RATING 32/16.BLOCK ALL PANEL EDGES. SECURE TO SUPPORTS AND BLOCKING WITH 8D NAILS AT 4" ON CENTER AT PANEL EDGES, AND 12" ON CENTER IN THE FIELD.
2. APA RATED EXPOSURE I 15/32" THICK SHEATHING INSTALLED OVER 2X TONGUE AND GROOVE DECKING. SECURE SHEATHING TO DECKING WITH 8D NAILS AT 6" ON CENTER AT PANEL EDGES, AND 12" ON CENTER IN THE FIELD. SECURE TONGUE AND GROOVE DECKING TO SUPPORTS PER THE NAILING SCHEDULE ON S-601.
3. UNISTRUT PARTITION SUPPORT, SEE DETAIL C5 /S-511 FOR MORE INFORMATION.

WX STUD WALL SCHEDULE

MARK	SIZE	COMMENTS
W1	2X6 @ 16" OC	--
W2	2X6 @ 12" OC	--
W3	DOUBLE 2X6 @ 16" OC	ADDITIONAL STRESS REQUIREMENT: FB=1100 PSI, FC=1350 PSI
W4	DOUBLE 2X6 @ 12" OC	ADDITIONAL STRESS REQUIREMENT: FB=1100 PSI, FC=1350 PSI

STUD WALL LEGEND

INDICATES SHEAR WALL

INDICATES LOAD BEARING

INDICATES SIDE OF SHEAR WALL WITH STRUCTURAL SHEATHING

Chavez-Grieves consulting engineers, inc.
4700 Lincoln Road NE, Suite 105 • Albuquerque, NM 87109
505-344-4080 • 505-343-8759 fax

STAMP

BENJAMIN L. BURKHARD
NEW MEXICO
26142
PROFESSIONAL ENGINEER
11/03/2023
EXP: 12/31/2024

DYRON MURPHY ARCHITECTS, P.C.
4505 Montbel Place NE, Albuquerque, New Mexico 87107

SHIPROCK PINNACLE HOTEL & RESTAURANT

SHIPROCK, NEW MEXICO

100% CONSTRUCTION DOCUMENTS

ISSUED FOR CONSTRUCTION

NOVEMBER 03, 2023

PROJECT NUMBER	DRAWN BY	PROJ MGR
2022.10	ML / KB	BB/MG

HIGH ROOF FRAMING PLAN - RESTAURANT

Sheet Title

Sheet Number of

S-123

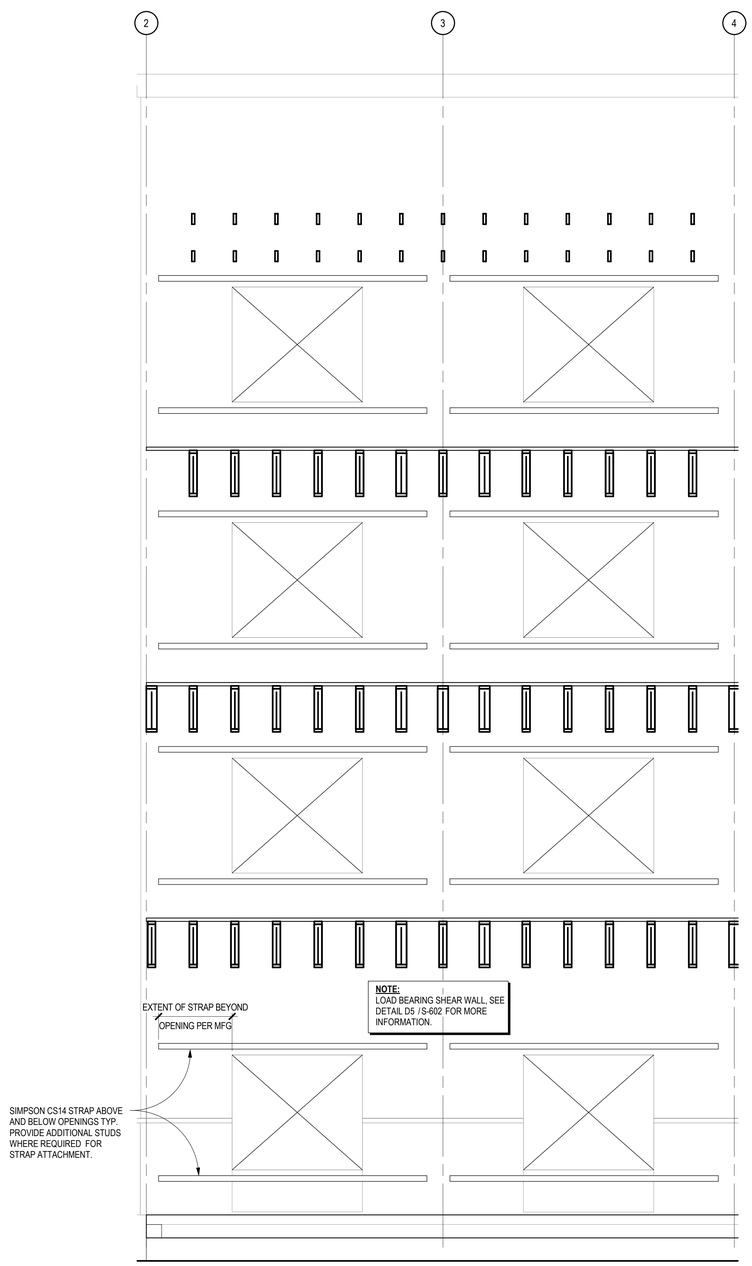

A5 **SW3 WALL ELEVATION**
SCALE: 3/8" = 1'-0"

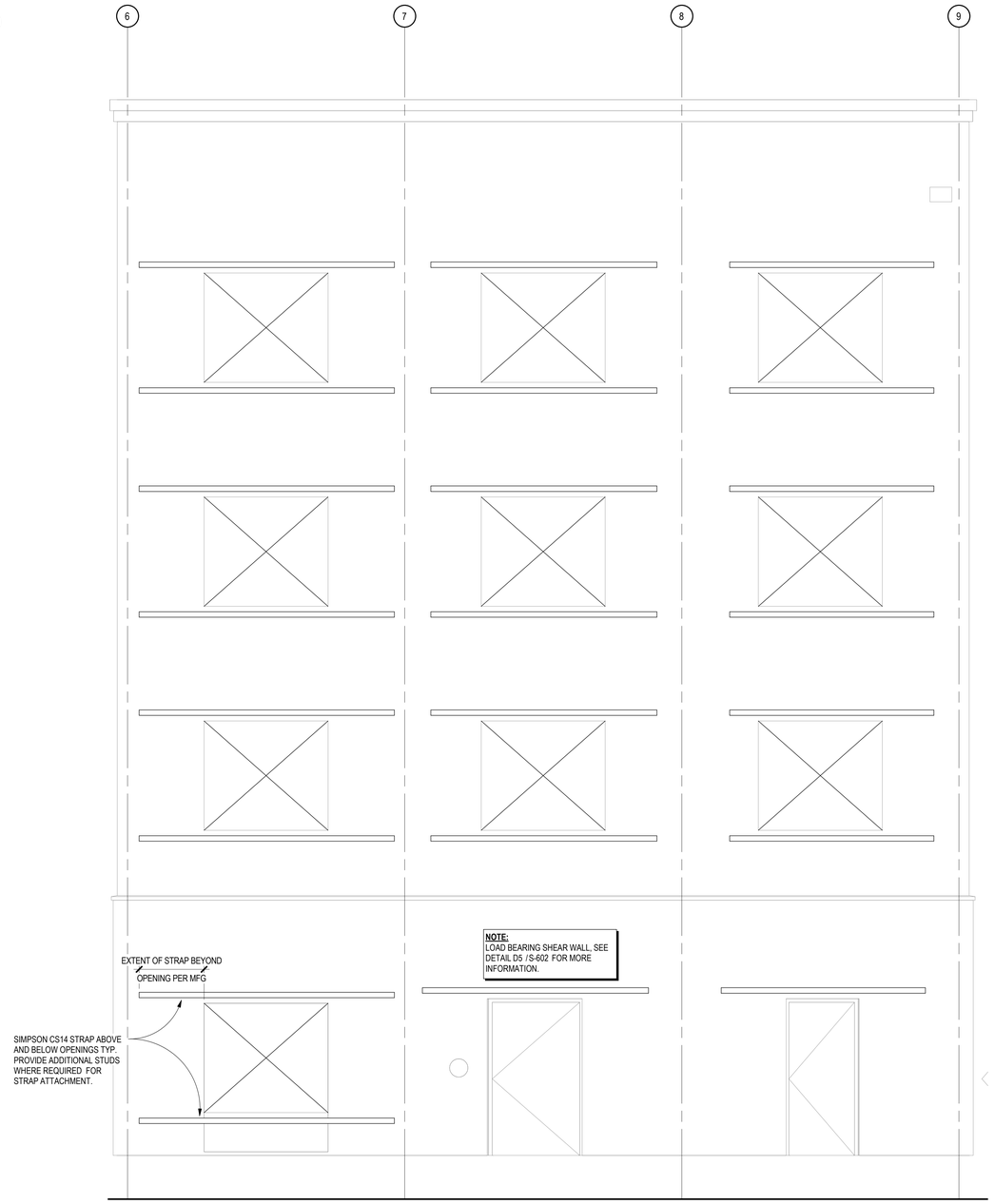

A3 **SW2 WALL ELEVATION**
SCALE: 3/8" = 1'-0"

Chavez-Grieves consulting engineers, inc.
4700 Lincoln Road NE, Suite 100 • Albuquerque, NM 87109
505-344-4080 • 505-343-8759 fax

STAMP

BENJAMIN L. BURKHARD
NEW MEXICO
26142
PROFESSIONAL ENGINEER
11/03/2023
EXP: 12/31/2024

DYRON MURPHY ARCHITECTS, P.C.

4505 Montbel Place NE, Albuquerque, New Mexico 87107

SHIPROCK PINNACLE HOTEL & RESTAURANT

SHIPROCK, NEW MEXICO

100% CONSTRUCTION DOCUMENTS

ISSUED FOR CONSTRUCTION

NOVEMBER 03, 2023

PROJECT NUMBER	DRAWN BY	PROJ MGR
2022.10	ML / KB	BB/MG

WALL ELEVATIONS

Sheet Title

Sheet Number of

S-201

11/3/2023 6:58:51 PM C:\Revit Projects\M07-198 Shiprock Pinnacle_Hotel_STRUCT_Bragua.rvt
DYRON MURPHY ARCHITECTS, P.C.

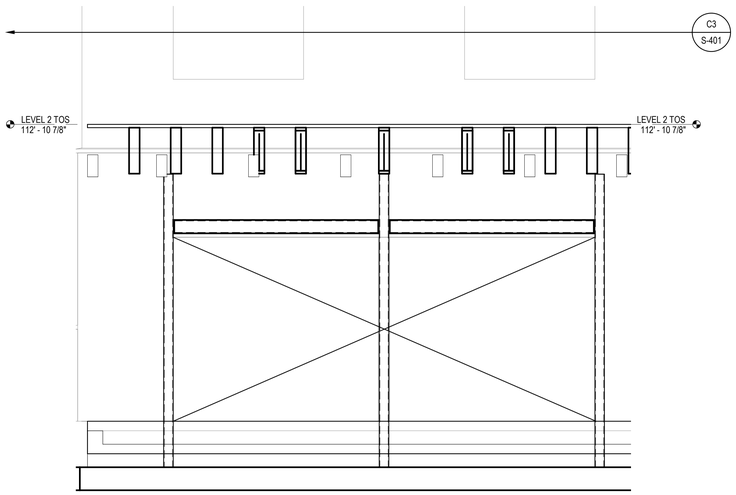

A6 **WALL ELEVATION**
SCALE: 3/8" = 1'-0"

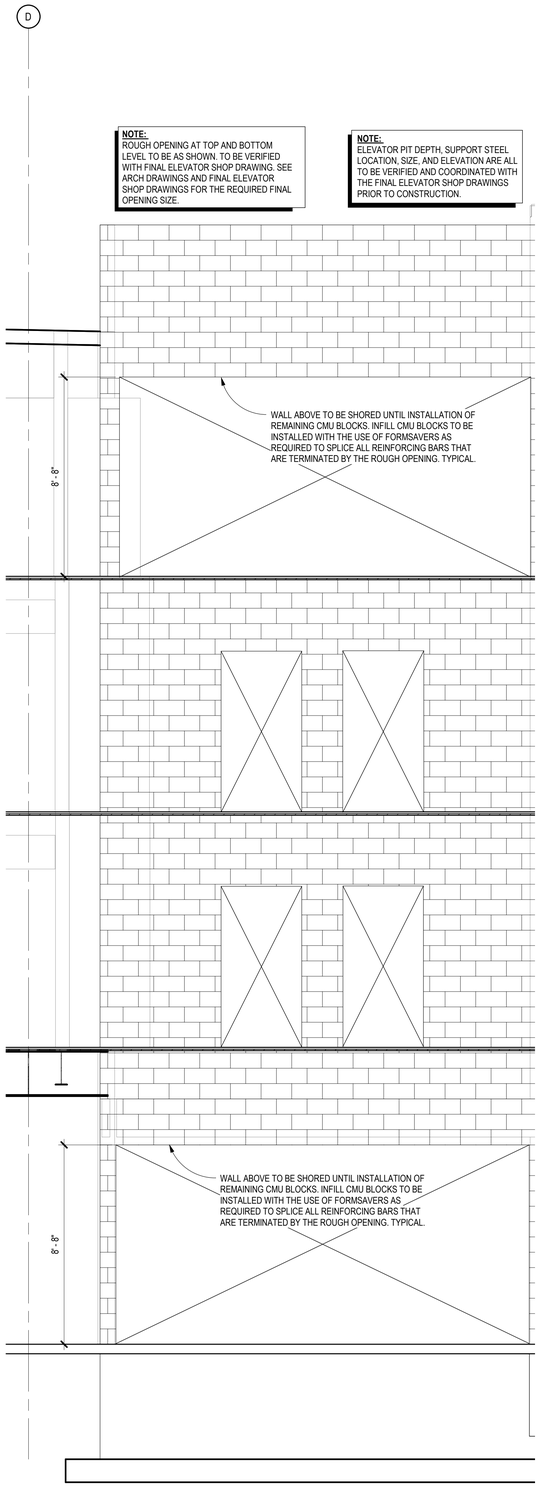

A4 **MASONRY SHEAR WALL ELEVATION**
SCALE: 3/8" = 1'-0"

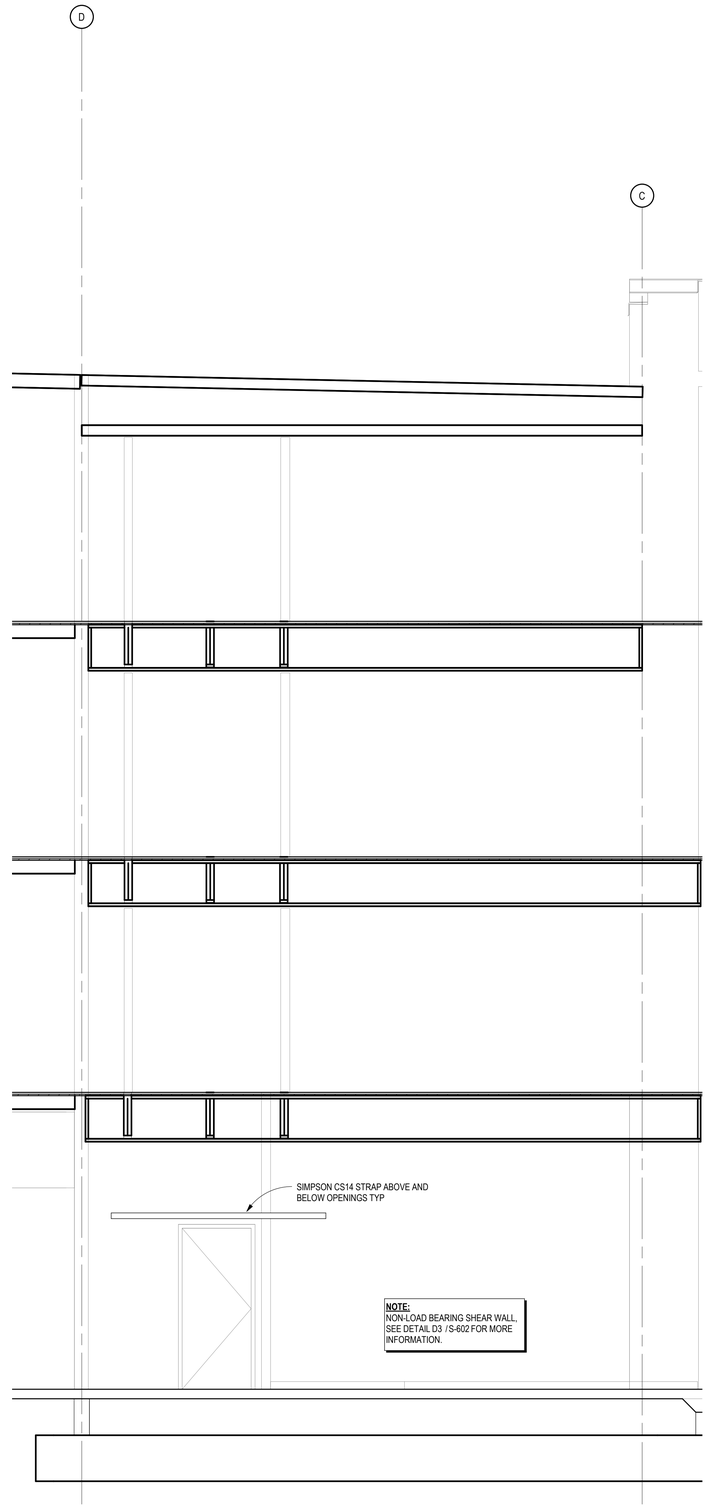

A3 **SW1 WALL ELEVATION**
SCALE: 3/8" = 1'-0"

Chavez-Grieves consulting engineers, inc.
4700 Lincoln Road NE, Suite 100 • Albuquerque, NM 87109
505-344-4080 • 505-343-8759 fax

STAMP

BENJAMIN L. BURKHARD
NEW MEXICO
26142
PROFESSIONAL ENGINEER
11/03/2023
EXP: 12/31/2024

DYRON MURPHY ARCHITECTS, P.C.
4505 Montbel Place NE, Albuquerque, New Mexico 87107

SHIPROCK PINNACLE HOTEL & RESTAURANT

SHIPROCK, NEW MEXICO

100% CONSTRUCTION DOCUMENTS

ISSUED FOR CONSTRUCTION

NOVEMBER 03, 2023

PROJECT NUMBER	DRAWN BY	PROJ MGR
2022.10	ML / KB	BB/ MG

WALL ELEVATIONS

Sheet Title

Sheet Number of

S-202

11/3/2023 6:58:52 PM
C:\Revit Projects\M07-198 Shiprock Pinnacle_Hotel_STRUCT_Bhagwan.rvt
DYRON MURPHY ARCHITECTS, P.C.

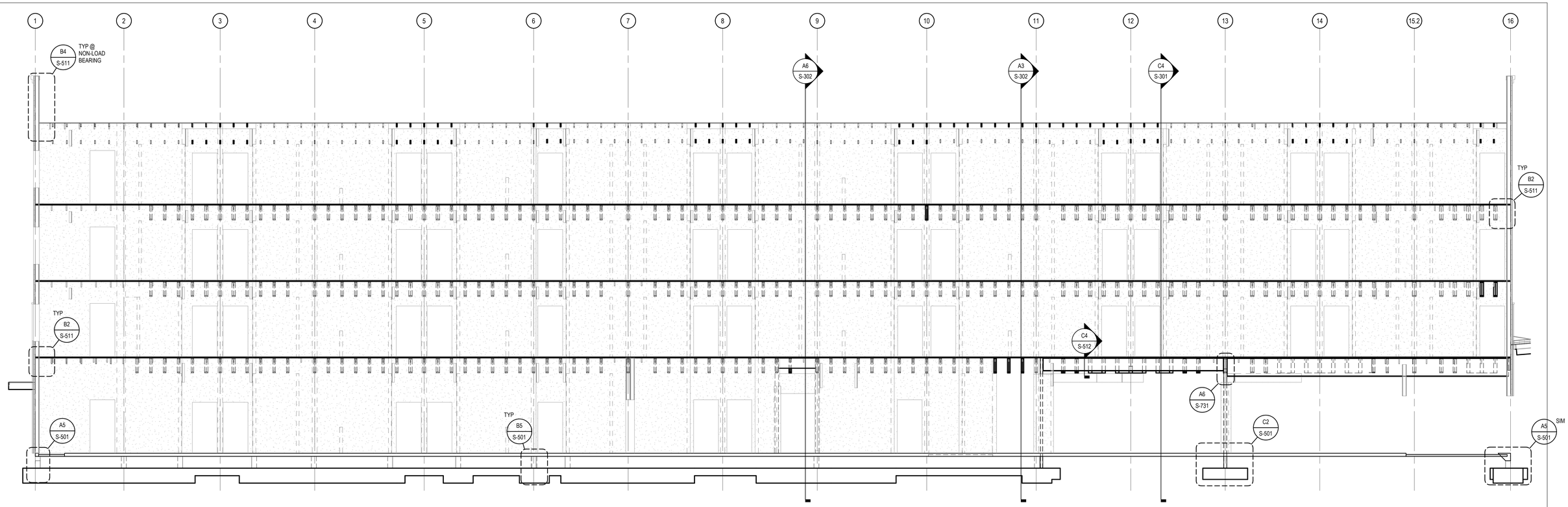

C6 BUILDING SECTION
SCALE: 3/16" = 1'-0"

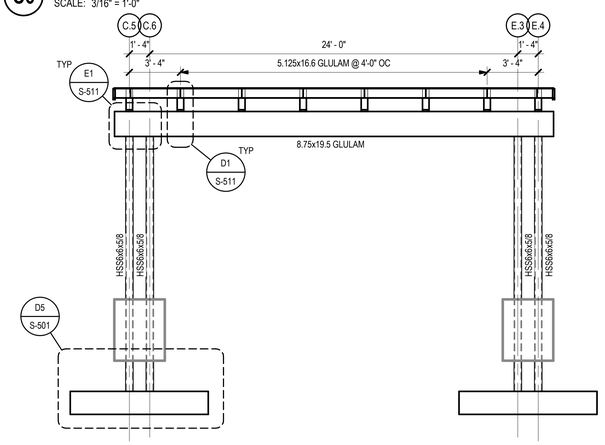

B6 BUILDING SECTION - PORTE COCHERE
SCALE: 1/4" = 1'-0"

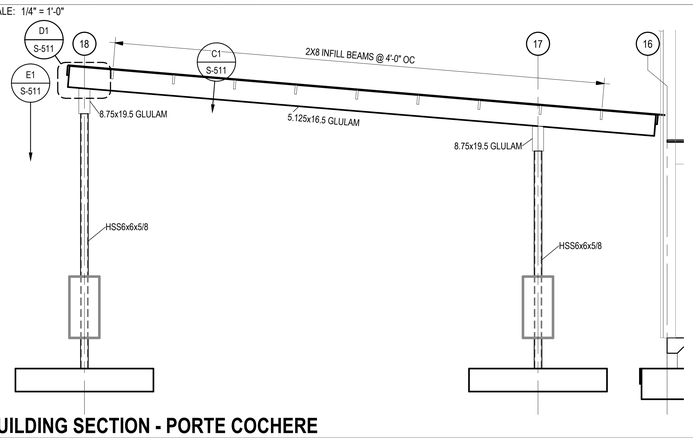

A6 BUILDING SECTION - PORTE COCHERE
SCALE: 1/4" = 1'-0"

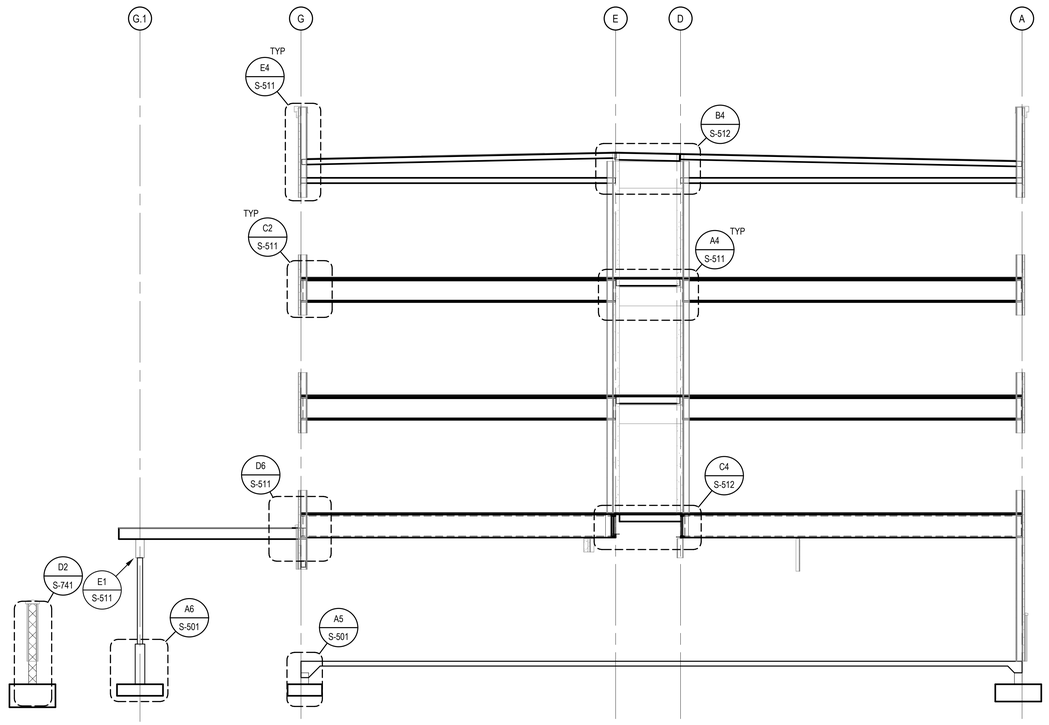

C4 BUILDING SECTION
SCALE: 3/16" = 1'-0"

Chavez-Grieves consulting engineers, inc.

STAMP

BENJAMIN L. BURKHARD NEW MEXICO 26142 PROFESSIONAL ENGINEER
11/03/2023
EXP: 12/31/2024

DYRON MURPHY ARCHITECTS, P.C.
4505 Montbel Place NE, Albuquerque, New Mexico 87107

SHIPROCK PINNACLE HOTEL & RESTAURANT
SHIPROCK, NEW MEXICO
100% CONSTRUCTION DOCUMENTS
ISSUED FOR CONSTRUCTION
NOVEMBER 03, 2023

PROJECT NUMBER	DRAWN BY	PROJ MGR
2022.10	ML / THF	BB/MG

BUILDING SECTIONS - HOTEL

Sheet Title

Sheet Number of

S-301

DYRON MURPHY ARCHITECTS, P.C.

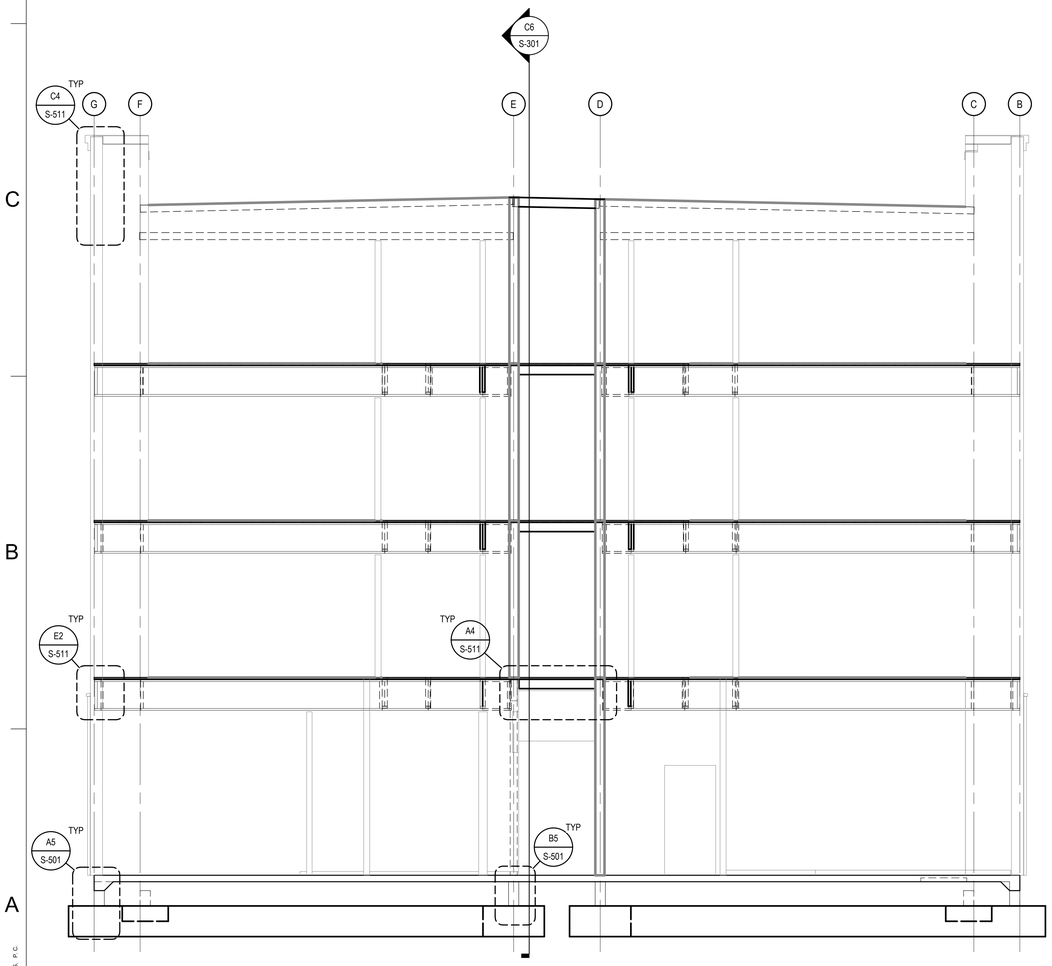

A6 **BUILDING SECTION**
SCALE: 1/4" = 1'-0"

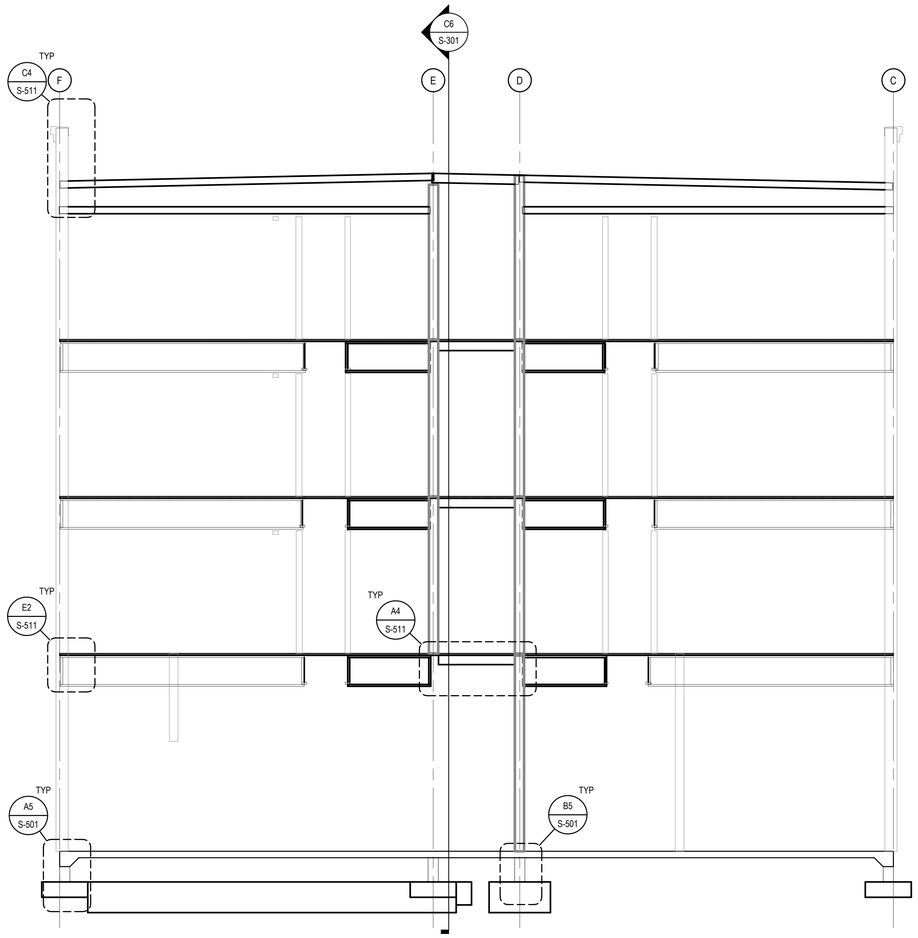

A3 **BUILDING SECTION**
SCALE: 1/4" = 1'-0"

Chavez-Grieves
consulting engineers, inc.
4700 Lincoln Road NE, Suite 100 • Albuquerque, NM 87109
505-344-4080 • 505-343-8759 fax

STAMP

BENJAMIN L. BURKHARD
NEW MEXICO
26142
PROFESSIONAL ENGINEER
11/03/2023
EXP: 12/31/2024

DYRON MURPHY ARCHITECTS, P.C.

4505 Montbel Place NE, Albuquerque, New Mexico 87107

SHIPROCK PINNACLE HOTEL & RESTAURANT

SHIPROCK, NEW MEXICO

100% CONSTRUCTION DOCUMENTS

ISSUED FOR CONSTRUCTION

NOVEMBER 03, 2023

PROJECT NUMBER	DRAWN BY	PROJ MGR
2022.10	ML /THF	BB/MG

BUILDING SECTIONS - HOTEL

Sheet Title

Sheet Number of

S-302

C:\Revit Projects\M97-198 Shiprock Pinnacle_Hotel_STRUCT_Bingua.rvt
11/3/2023 5:58:56 PM
DYRON MURPHY ARCHITECTS, P.C.

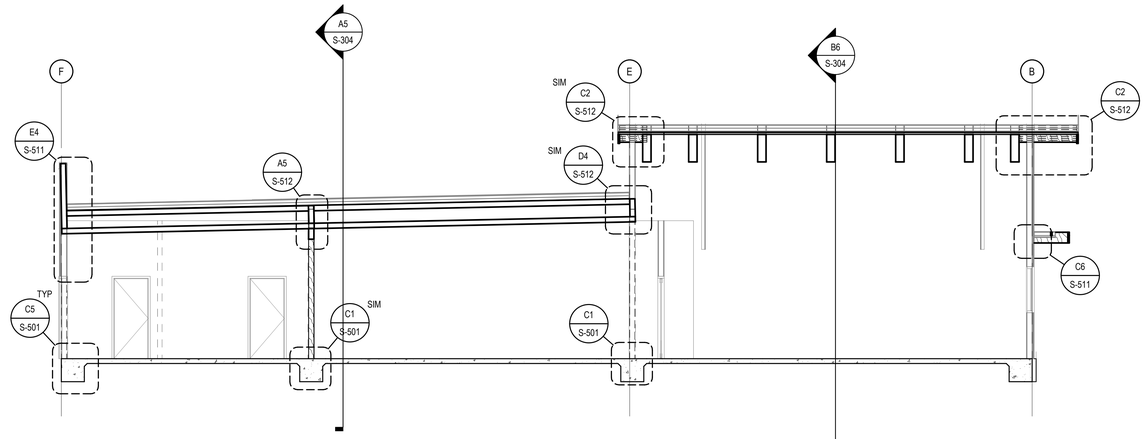

D6 BUIDLING SECTION
SCALE: 3/16" = 1'-0"

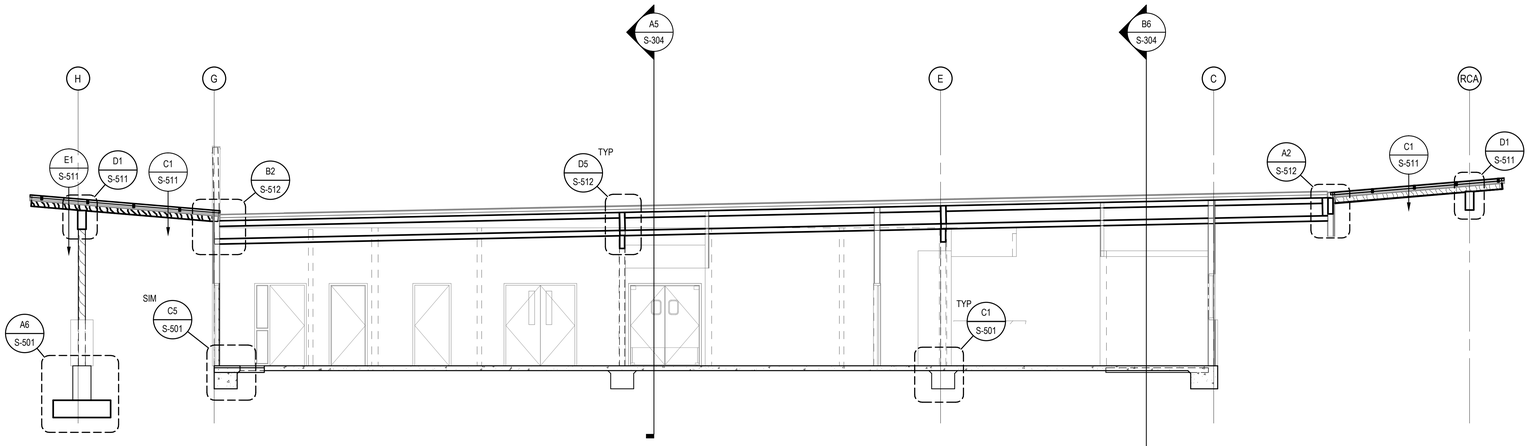

B6 BUIDLING SECTION
SCALE: 3/16" = 1'-0"

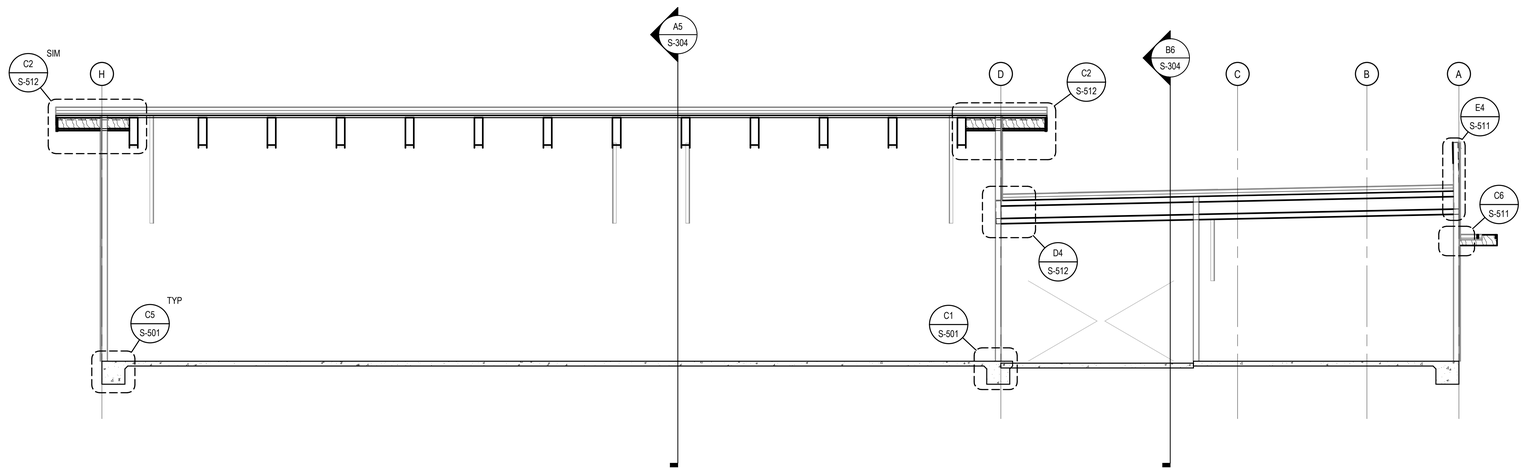

A6 BUILDING SECTION
SCALE: 3/16" = 1'-0"

Chavez-Grieves consulting engineers, inc.

STAMP

BENJAMIN L. BURKHARD
NEW MEXICO
26142
PROFESSIONAL ENGINEER
11/03/2023
EXP: 12/31/2024

DYRON MURPHY ARCHITECTS, P.C.

4505 Montbel Place NE, Albuquerque, New Mexico 87107

SHIPROCK PINNACLE HOTEL & RESTAURANT

SHIPROCK, NEW MEXICO

100% CONSTRUCTION DOCUMENTS

ISSUED FOR CONSTRUCTION

NOVEMBER 03, 2023

PROJECT NUMBER	DRAWN BY	PROJ MGR
2022.10	ML / KB	BB/MG

BUILDING SECTIONS - RESTAURANT

Sheet Title

Sheet Number of

S-303

DYRON MURPHY ARCHITECTS, P.C.

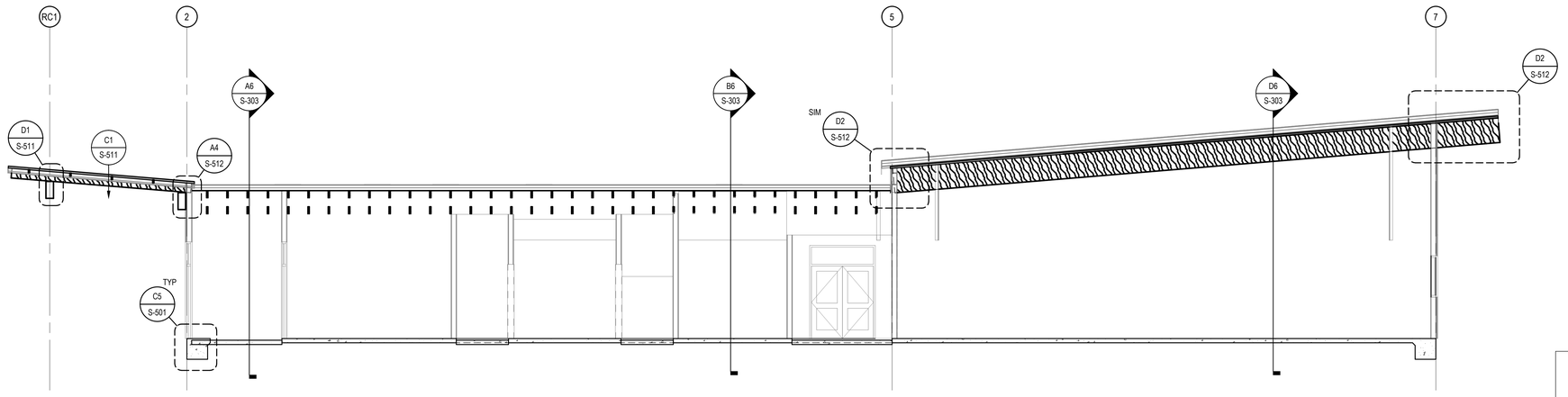

B6 BUILDING SECTION
SCALE: 3/16" = 1'-0"

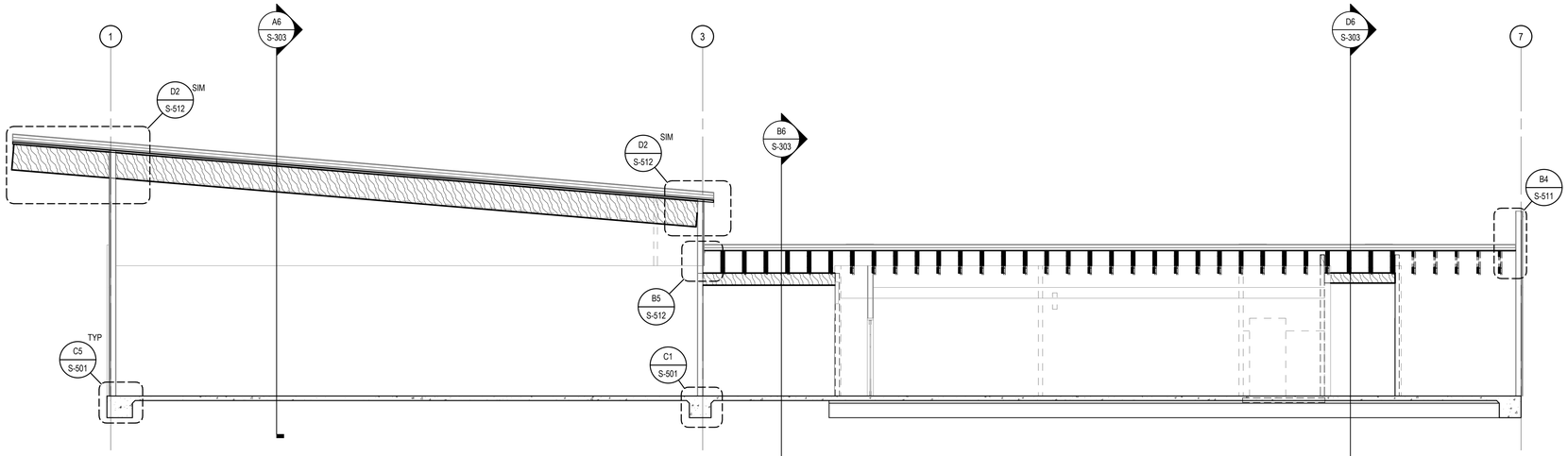

A5 BUILDING SECTION
SCALE: 3/16" = 1'-0"

Chavez-Grieves consulting engineers, inc.
4700 Lincoln Road NE, Suite 101 • Albuquerque, NM 87109
505-344-4080 • 505-343-8759 fax

STAMP

BENJAMIN L. BURKHARD
NEW MEXICO
26142
PROFESSIONAL ENGINEER
11/03/2023
EXP: 12/31/2024

DYRON MURPHY ARCHITECTS, P.C.

4505 Montbel Place NE, Albuquerque, New Mexico 87107

SHIPROCK PINNACLE HOTEL & RESTAURANT

SHIPROCK, NEW MEXICO

100% CONSTRUCTION DOCUMENTS

ISSUED FOR CONSTRUCTION

NOVEMBER 03, 2023

PROJECT NUMBER	DRAWN BY	PROJ MGR
2022.10	ML / KB	BB/MG

BUILDING SECTIONS - RESTAURANT

Sheet Title

Sheet Number of

S-304

C:\Revit Projects\M07-198 Shiprock Pinnacle_Hotel_STRUCT_Bragua.rvt
11/3/2023 5:58:59 PM
DYRON MURPHY ARCHITECTS, P.C.

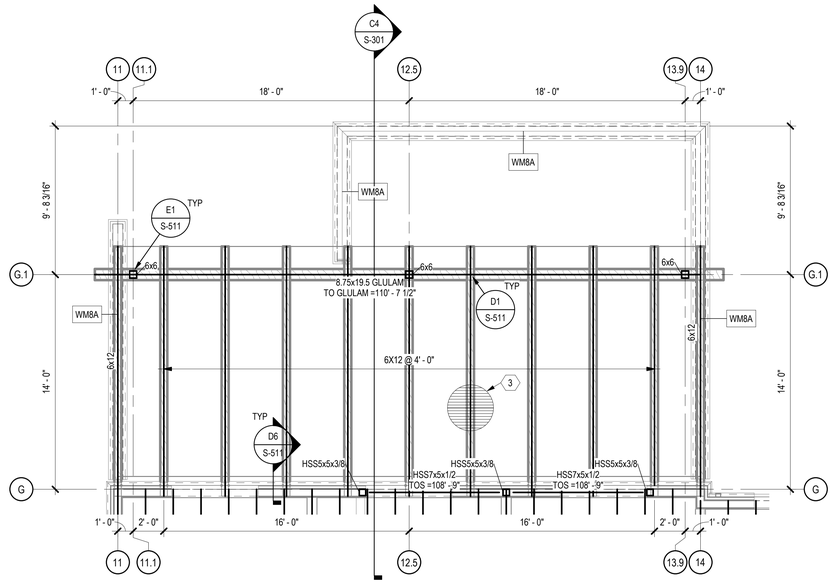

C3 ENLARGED FRAMING PLAN - NORTH TRELLIS

SCALE: 1/4" = 1'-0"

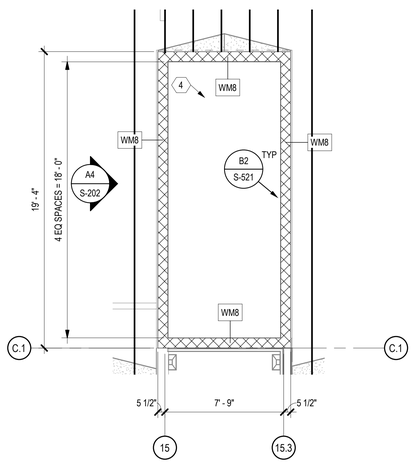

A4 ENLARGED PLAN - ELEV ROOF

SCALE: 1/4" = 1'-0"

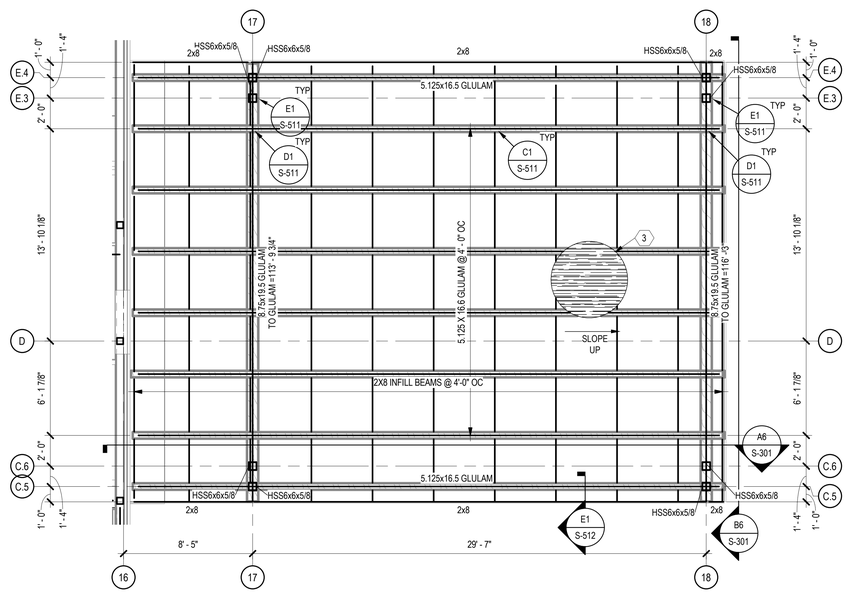

A3 ENLARGED FRAMING PLAN - PORTE COCHERE PLAN

SCALE: 1/4" = 1'-0"

GENERAL SHEET NOTES

1. SOME SHEET KEYNOTES MAY NOT APPLY TO THIS SHEET.
2. NOTE TO ERECTOR: LATERAL STABILITY OF THE STEEL FRAME IS DEPENDENT UPON THE STEEL MOMENT FRAMES]. THE ERECTOR SHALL PROVIDE TEMPORARY BRACING OF THE STEEL FRAME IN ACCORDANCE WITH SECTION 7.10 OF THE AISC CODE OF STANDARD PRACTICES.
3. DIMENSIONS ARE TO THE FACE OF STUD OR GRID LINES UNLESS NOTED OTHERWISE.
4. BEAMS OR JOIST ARE SPACE EQUALLY BETWEEN MEMBERS SHOWN CENTERED BETWEEN COLUMNS UNLESS NOTED OTHERWISE.
5. ELEVATOR PIT DEPTH, SUPPORT STEEL LOCATION, SIZE, AND ELEVATION ARE ALL TO BE VERIFIED AND COORDINATED WITH THE FINAL ELEVATOR SHOP DRAWINGS PRIOR TO CONSTRUCTION.

SHEET KEYNOTES

1. SUMP PIT AS REQUIRED BY ELEVATOR MANUFACTURER. LOCATE AS REQUIRED BY THE FINAL ELEVATOR SHOP DRAWINGS.
2. 1'-6" THICK ELEVATOR PIT MAT. ELEVATION OF ELEVATOR PIT FOUNDATION IS PENDING FINAL ELEVATOR DESIGN INFORMATION. ELEVATION 96'-0" IS ASSUMED.
3. 3/4" APA RATED EXPOSURE I SHEATHING. MIMNUM SPAN RATING 48/24. SECURE TO SUPPORTS W/ 10D NAILS AT 6" ON CENTER AT PANEL EDGES AND AT 12" ON CENTER IN THE FIELD.
4. 12x26 HOIST BEAM. LOCATION, ELEVATION, AND SIZE TO BE VERIFIED WITH THE FINAL ELEVATOR SHOP DRAWINGS.

Chavez-Grieves
consulting engineers, inc.
4100 Lincoln Road NE, Suite 105 • Albuquerque, NM 87109
505-344-4080 • 505-343-8759 fax

STAMP

BENJAMIN L. BURKHARD
NEW MEXICO
26142
PROFESSIONAL ENGINEER
11/03/2023
EXP: 12/31/2024

DYRON MURPHY ARCHITECTS, P.C.
4505 Montbel Place NE, Albuquerque, New Mexico 87107

SHIPROCK PINNACLE HOTEL & RESTAURANT

SHIPROCK, NEW MEXICO

100% CONSTRUCTION DOCUMENTS

ISSUED FOR CONSTRUCTION

NOVEMBER 03, 2023

PROJECT NUMBER	DRAWN BY	PROJ MGR
2022.10	KB/ML	BB/MG

ENLARGED PLANS - HOTEL

Sheet Title

Sheet Number of

S-401

11/3/2023 6:59:01 PM C:\Revit Projects\RAR-108 Shiprock Pinnacle_Hotel_STRUCT_Bhagat.rvt
DYRON MURPHY ARCHITECTS, P.C.

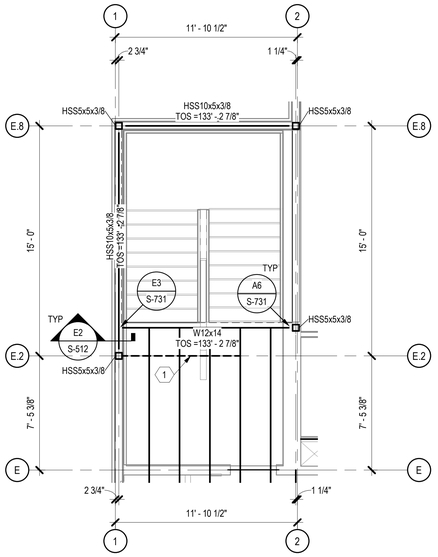

B6 STAIR 2 FRAMING 4TH FL - HOTEL
SCALE: 1/4" = 1'-0"

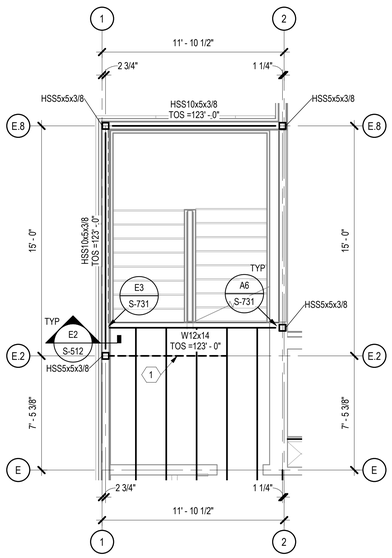

B4 STAIR 2 FRAMING 3RD FL - HOTEL
SCALE: 1/4" = 1'-0"

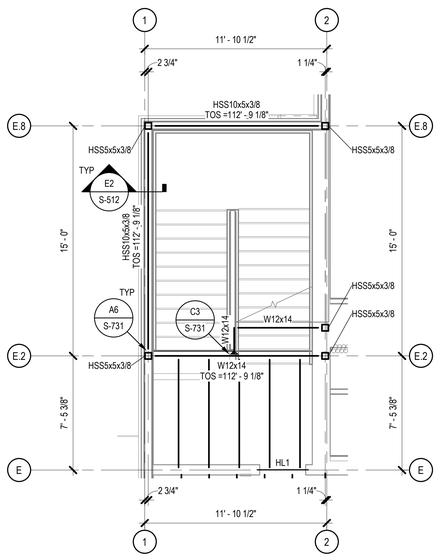

B3 STAIR 2 FRAMING 2ND FL - HOTEL
SCALE: 1/4" = 1'-0"

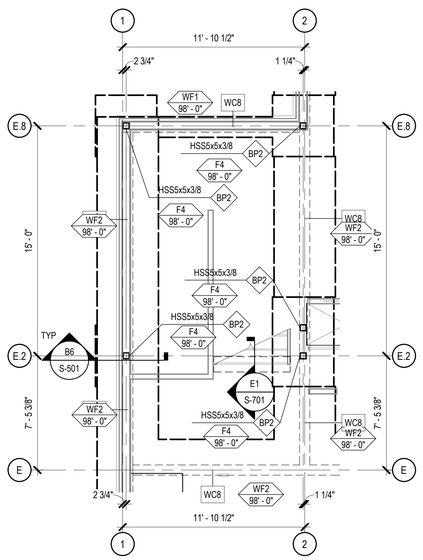

B2 STAIR 2 FOUNDATION - HOTEL
SCALE: 1/4" = 1'-0"

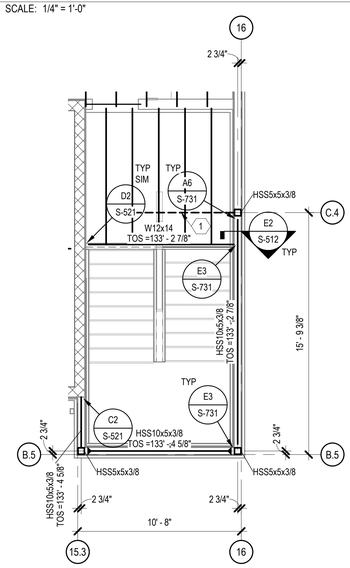

A6 STAIR 1 FRAMING 4TH FL - HOTEL
SCALE: 1/4" = 1'-0"

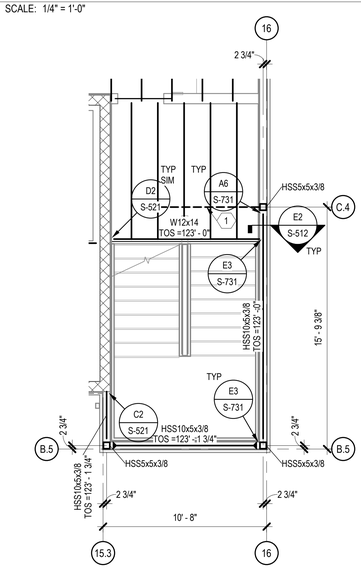

A4 STAIR 1 FRAMING 3RD FL - HOTEL
SCALE: 1/4" = 1'-0"

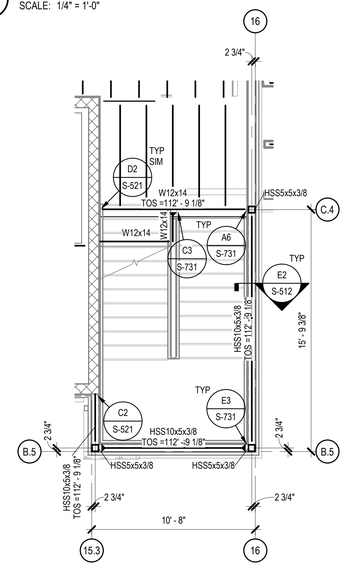

A3 STAIR 1 FRAMING 2ND FL - HOTEL
SCALE: 1/4" = 1'-0"

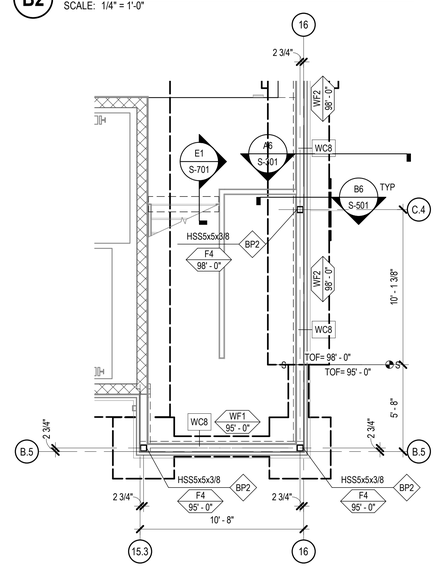

A2 STAIR 1 FOUNDATION - HOTEL
SCALE: 1/4" = 1'-0"

GENERAL SHEET NOTES

1. SOME SHEET KEYNOTES MAY NOT APPLY TO THIS SHEET.
2. DIMENSIONS ARE TO THE FACE OF [CONCRETE, MASONRY, STUD, ETC] OR [GRID LINES] UNLESS NOTED OTHERWISE. COORDINATE ALL STAIR DIMENSIONS WITH THE ARCHITECTURAL DRAWINGS.
3. SEE ARCHITECTURAL DRAWINGS FOR INTERMEDIATE LANDING ELEVATIONS.
4. SEE ARCHITECTURAL DRAWINGS FOR STAIR RISE AND RUN.
5. STRUCTURAL COLD FORMED METAL STUDS SHALL BE [600S162-43] AT [16"] ON CENTER UNLESS NOTED OTHERWISE.

SHEET KEYNOTES

1. BLOCKING TRUSS PER A2 / S-511. ATTACH TOP CHORD TO FLOOR SHEATHING PER TYPICAL DECK ATTACHMENT.

Chavez-Grieves consulting engineers, inc.
4700 Lincoln Road NE, Suite 103 • Albuquerque, NM 87109
505-344-4080 • 505-343-9759 fax

STAMP

BENJAMIN L. BURKHARD
NEW MEXICO
26142
PROFESSIONAL ENGINEER
11/03/2023
EXP: 12/31/2024

DYRON MURPHY ARCHITECTS, P.C.
4505 Montbel Place NE, Albuquerque, New Mexico 87107

SHIPROCK PINNACLE HOTEL & RESTAURANT

SHIPROCK, NEW MEXICO

100% CONSTRUCTION DOCUMENTS

ISSUED FOR CONSTRUCTION

NOVEMBER 03, 2023

PROJECT NUMBER	DRAWN BY	PROJ MGR
2022.10	ML/KB	BB/MG

STAIR FRAMING PLANS - HOTEL

Sheet Title

Sheet Number of

S-402

11/3/2023 6:59:06 PM C:\Revit Projects\MSP-188 Shiprock Pinnacle_Hotel_STRUCT_Bhagat.rvt
DYRON MURPHY ARCHITECTS, P.C.

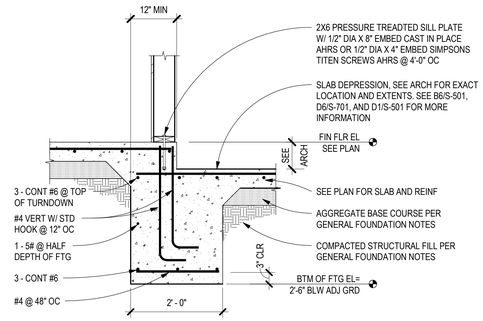

D6 TURNDOWN INTERIOR SECTION AT SLAB DEPRESSION
SCALE: 3/4" = 1'-0"

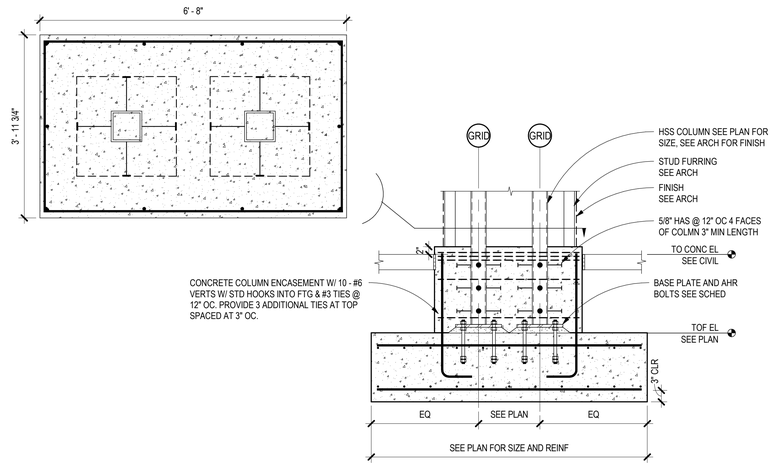

D5 PORTE COCHERE COLUMN BASE SECTION
SCALE: 3/4" = 1'-0"

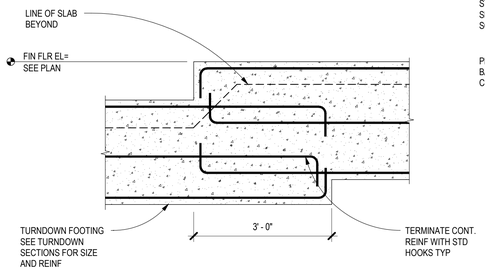

D2 TURNDOWN FOOTING STEP AT FLOOR DEPRESSION
SCALE: 3/4" = 1'-0"

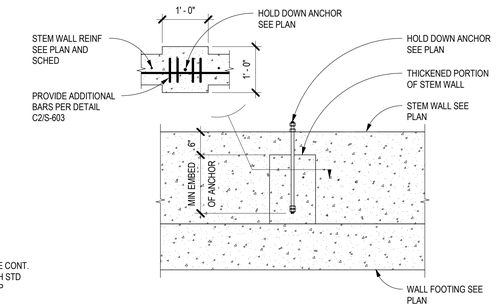

D1 HOLD DOWN AT STEM WALL
SCALE: 3/4" = 1'-0"

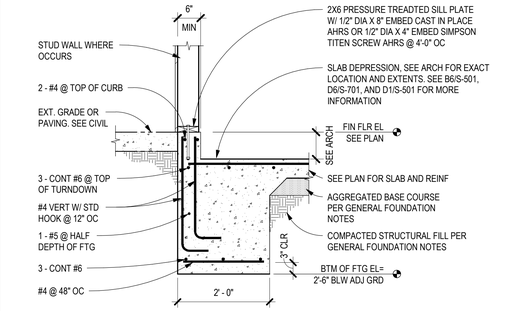

C6 TURNDOWN PERIMETER SECTION AT SLAB DEPRESSION
SCALE: 3/4" = 1'-0"

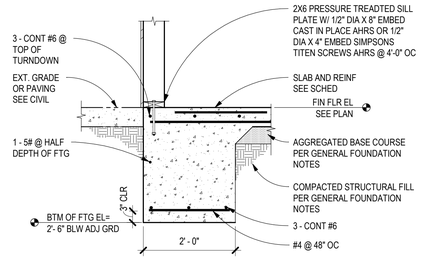

AT STUD WALL

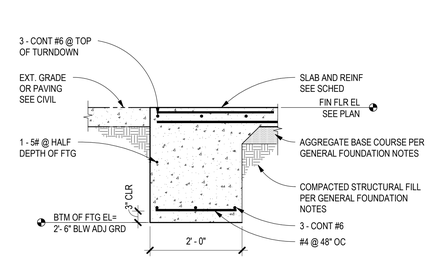

AT OPENING

C5 TYPICAL TURNDOWN PERIMETER SECTIONS
SCALE: 3/4" = 1'-0"

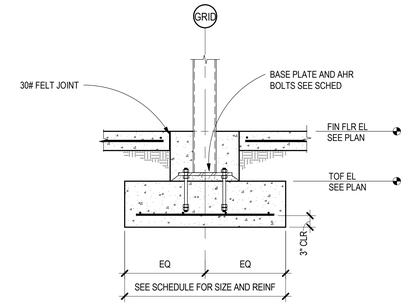

C2 TYPICAL INTERIOR HSS COLUMN
SCALE: 3/4" = 1'-0"

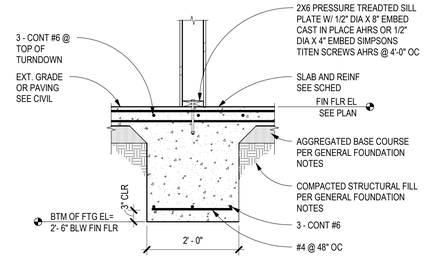

C1 TYPICAL TURNDOWN INTERIOR SECTION
SCALE: 3/4" = 1'-0"

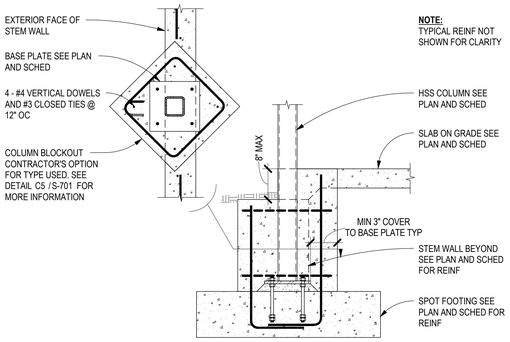

B6 EXTERIOR HSS COLUMN AT STEM WALL
SCALE: 3/4" = 1'-0"

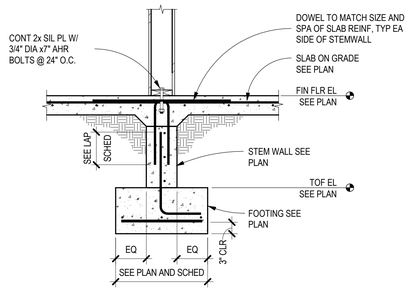

AT BEARING/SHEAR WALL

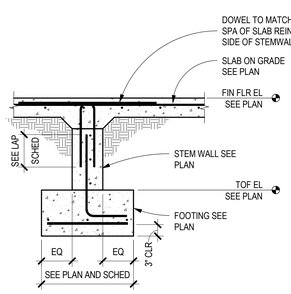

AT OPENING

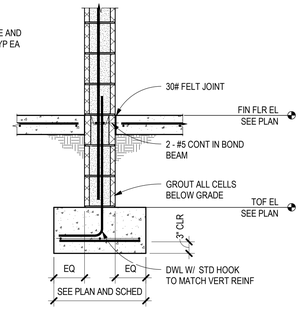

AT CMU WALL

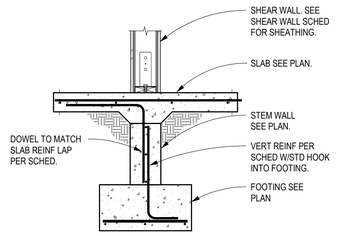

AT SHEAR WALL

B5 TYPICAL INTERIOR FOUNDATION SECTION
SCALE: 3/4" = 1'-0"

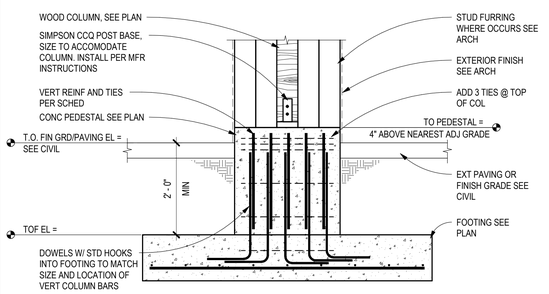

A6 EXTERIOR WOOD POST BASE DETAIL
SCALE: 3/4" = 1'-0"

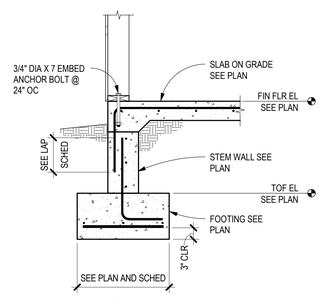

AT STUD WALL

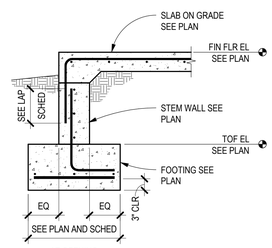

AT OPENING

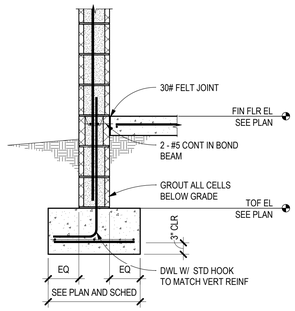

AT CMU WALL

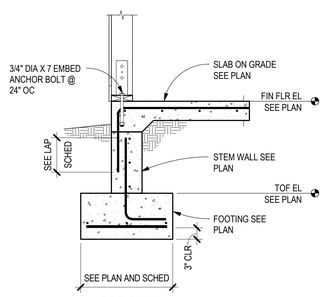

AT SHEAR WALL

A5 TYPICAL FOUNDATION SECTIONS
SCALE: 3/4" = 1'-0"

Chavez-Grieves consulting engineers, inc.
4700 Lincoln Road NE, Suite 105 • Albuquerque, NM 87109
505-344-4080 • 505-343-8759 fax

STAMP

BENJAMIN L. BURKHARD NEW MEXICO 26142 PROFESSIONAL ENGINEER

11/03/2023
EXP: 12/31/2024

DYRON MURPHY ARCHITECTS, P.C.

4505 Montbel Place NE, Albuquerque, New Mexico 87107

SHIPROCK PINNACLE HOTEL & RESTAURANT

SHIPROCK, NEW MEXICO

100% CONSTRUCTION DOCUMENTS

ISSUED FOR CONSTRUCTION

NOVEMBER 03, 2023

PROJECT NUMBER	DRAWN BY	PROJ MGR
2022.10	ML/THF	BB/MG

FOUNDATION SECTION AND DETAILS

Sheet Title

Sheet Number

of

S-501

11/3/2023 6:50:09 PM C:\Revit Projects\RAR-106 Shiprock Pinnacle_Hotel_STRUCT_Bhagya.rvt
DYRON MURPHY ARCHITECTS, P.C.

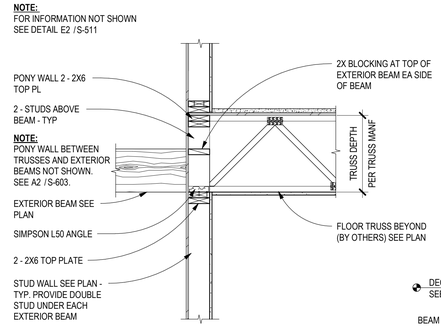

D6 WOOD BM BEARING EXT SECTION
SCALE: 3/4" = 1'-0"

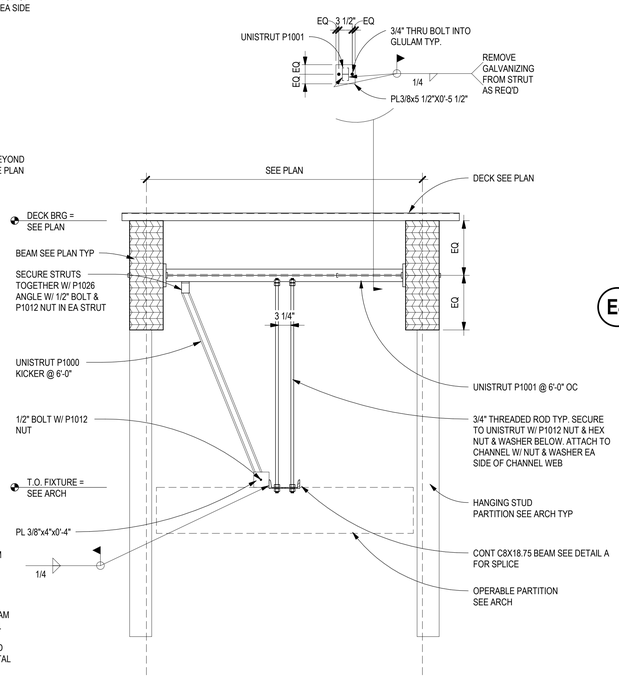

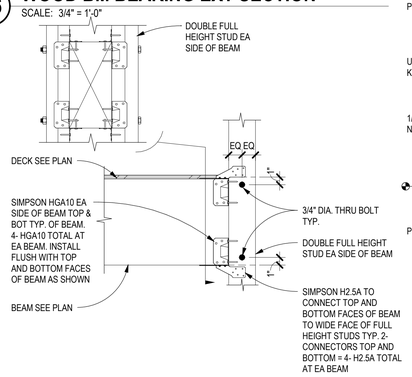

C6 EXTERIOR OUTRIGGER DETAIL
SCALE: 1 1/2" = 1'-0"

C5 OPERABLE PARTITION SUPPORT DETAIL
SCALE: 3/4" = 1'-0"

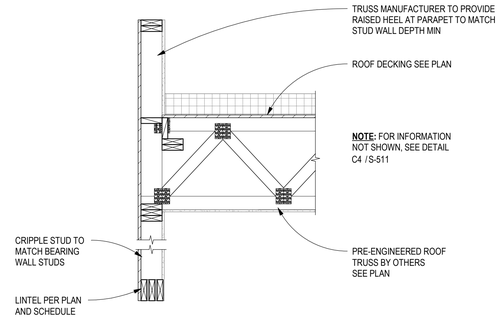

E4 ROOF TRUSS BEARING SECTION AT HEADER
SCALE: 3/4" = 1'-0"

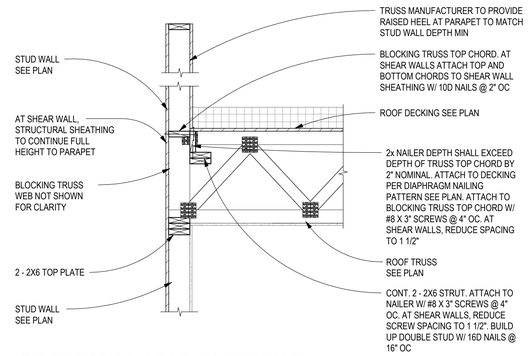

C4 ROOF TRUSS BEARING SECTION
SCALE: 3/4" = 1'-0"

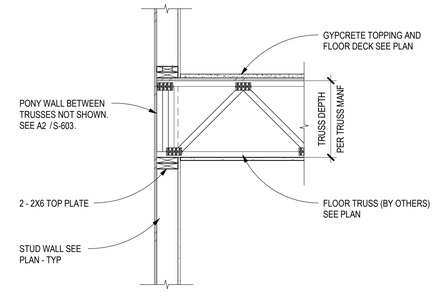

E2 FLOOR TRUSS BEARING SECTION
SCALE: 3/4" = 1'-0"

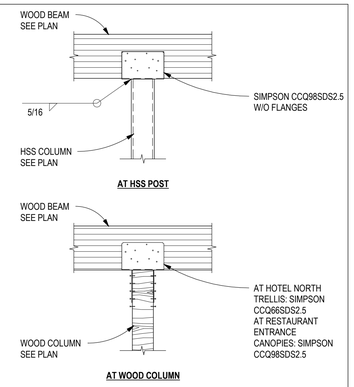

E1 WOOD BM TO POST CONN
SCALE: 3/4" = 1'-0"

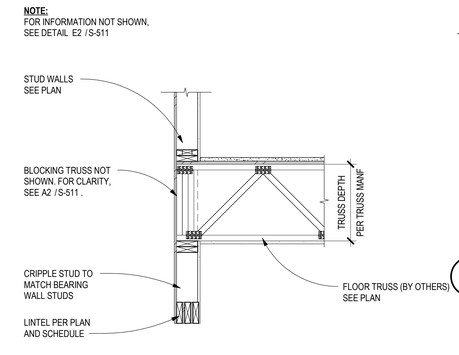

C2 FLOOR TRUSS BEARING SECTION AT HEADER
SCALE: 3/4" = 1'-0"

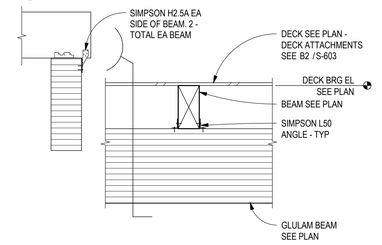

D1 BM BEARING ON GLULAM
SCALE: 3/4" = 1'-0"

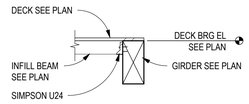

C1 WOOD INFILL BM TO GIRDER
SCALE: 3/4" = 1'-0"

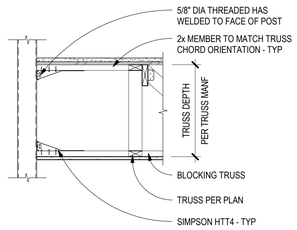

B6 FLOOR FRAMING AT HSS POST
SCALE: 3/4" = 1'-0"

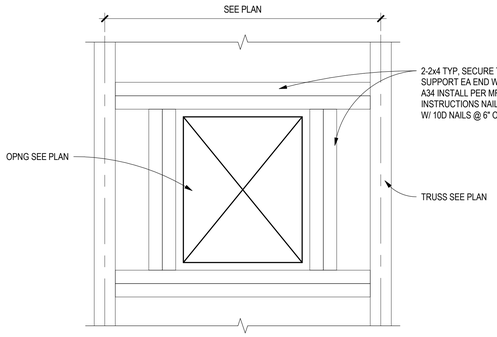

B5 TYPICAL ROOF OPNG
SCALE: 3/4" = 1'-0"

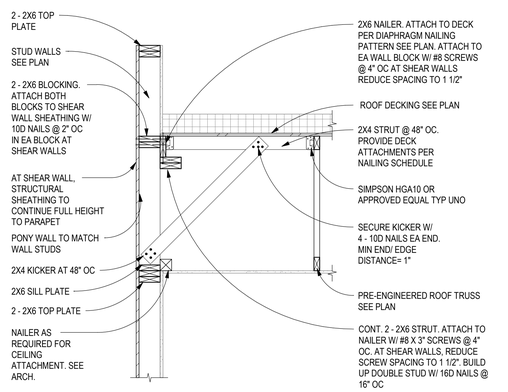

B4 PARAPET SECTION AT END WALL
SCALE: 3/4" = 1'-0"

B2 FLOOR TRUSS NON-BEARING SECTION
SCALE: 3/4" = 1'-0"

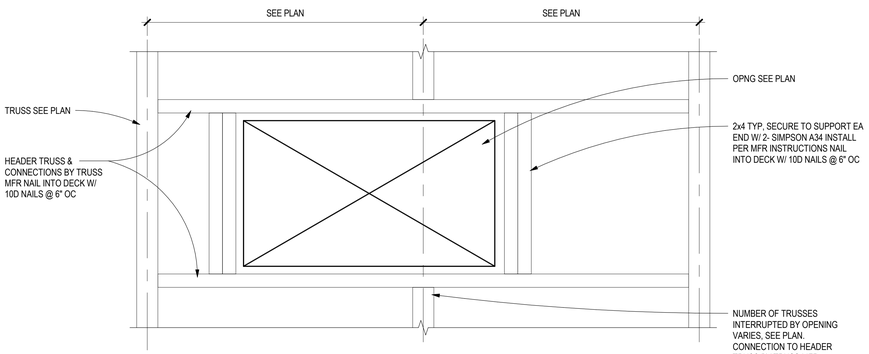

A6 ROOF OPENING W/ HEADER TRUSSES
SCALE: 3/4" = 1'-0"

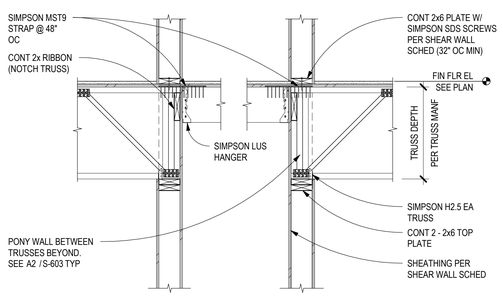

A4 FLOOR TRUSS AT LOAD BEARING WALL
SCALE: 3/4" = 1'-0"

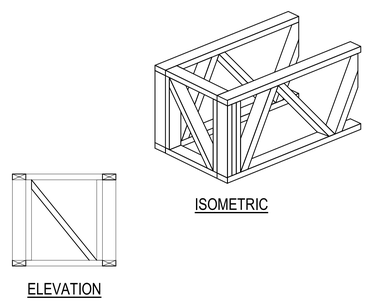

A2 BLOCKING TRUSS ISOMETRIC AND ELEVATION
SCALE: 3/4" = 1'-0"

Chavez-Grieves
consulting engineers, inc.
4100 Lincoln Road NE, Suite 100 Albuquerque, NM 87109
505-344-4080 • 505-343-8703 fax

STAMP

BENJAMIN L. BURKHARD
NEW MEXICO
26142
PROFESSIONAL ENGINEER
11/03/2023
EXP: 12/31/2024

DYRON MURPHY ARCHITECTS, P.C.
4505 Montbel Place NE, Albuquerque, New Mexico 87107

SHIPROCK PINNACLE HOTEL & RESTAURANT

SHIPROCK, NEW MEXICO

100% CONSTRUCTION DOCUMENTS

ISSUED FOR CONSTRUCTION

NOVEMBER 03, 2023

PROJECT NUMBER	DRAWN BY	PROJ MGR
2022.10	ML/KB	BB/MG

WOOD FRAMING DETAILS

Sheet Title

Sheet Number

of

S-511

11/3/2023 8:56:12 PM C:\Revit Projects\0497-198 Shiprock Pinnacle_Hotel_STRUCT_Burkhard.rvt
DYRON MURPHY ARCHITECTS, P.C.

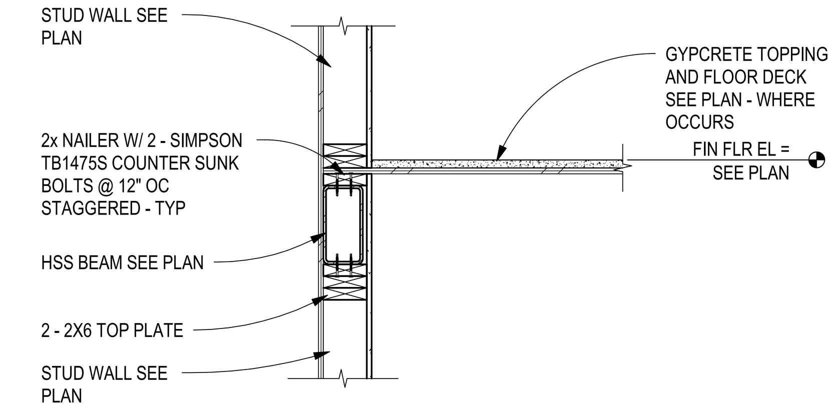

E2 EXTERIOR WALL FRAMING SECTION
SCALE: 3/4" = 1'-0"

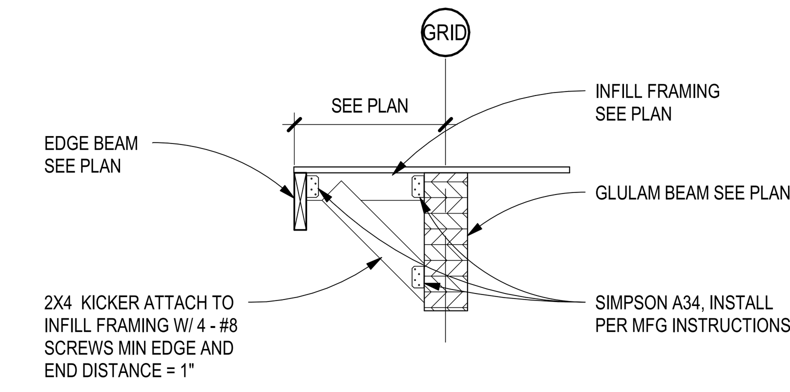

E1 PORTE COCHERE EDGE DETAIL
SCALE: 3/4" = 1'-0"

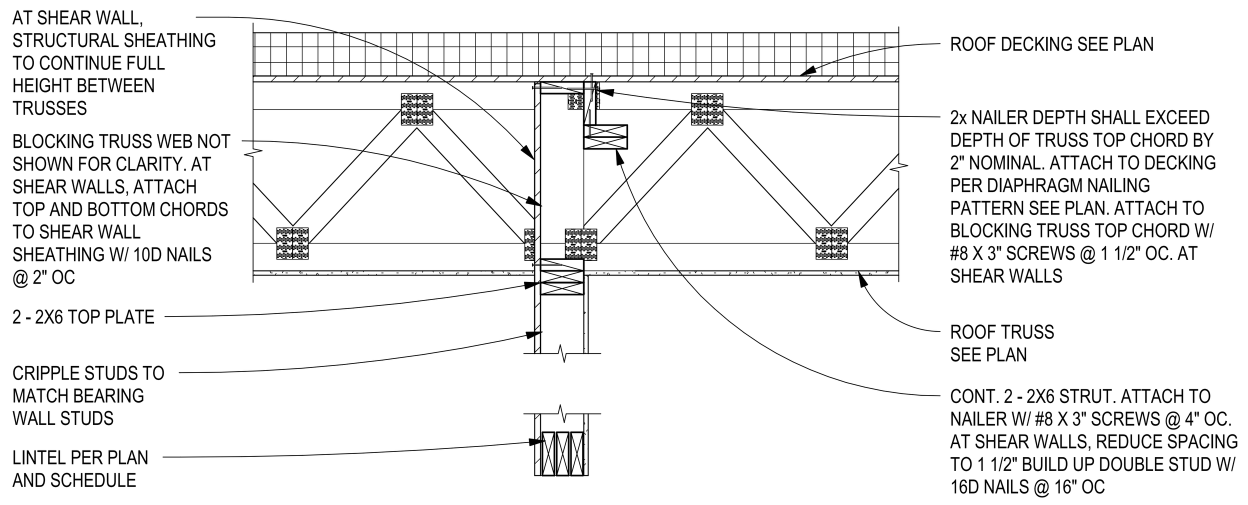

D5 ROOF TRUSS BEARING SECTION - INTERIOR HEADER
SCALE: 3/4" = 1'-0"

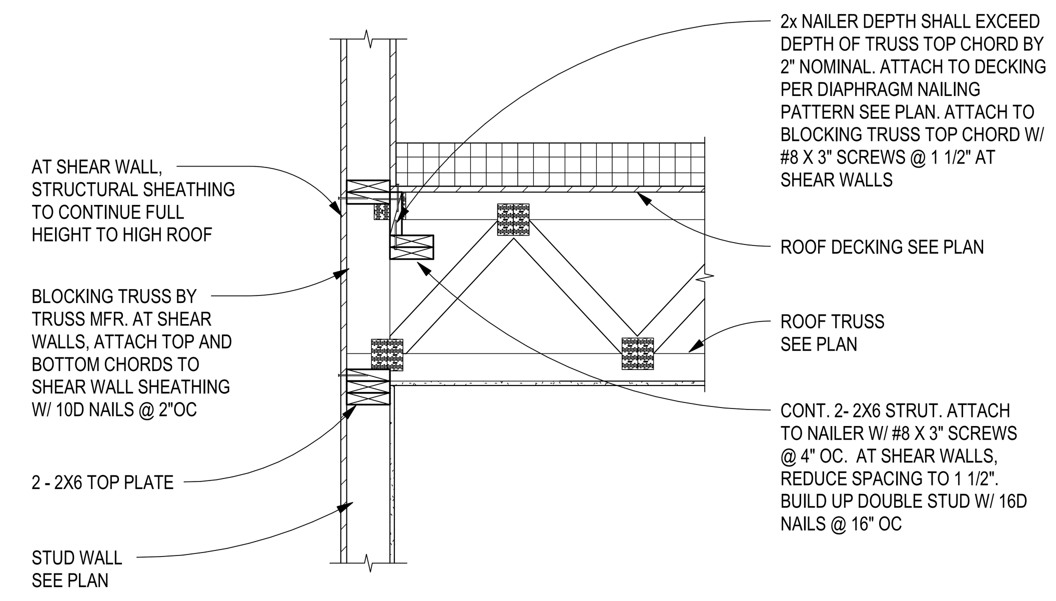

D4 ROOF TRUSS BEARING SECTION - HIGH/LOW ROOF INTERFACE
SCALE: 3/4" = 1'-0"

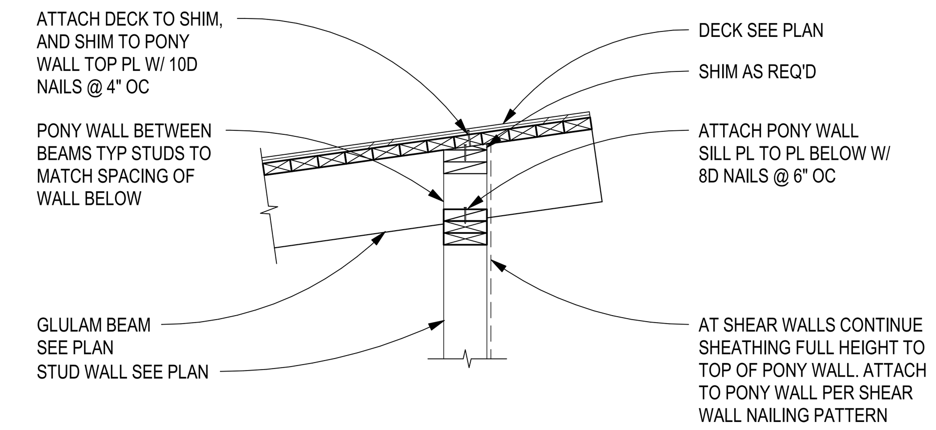

D2 HIGH ROOF BOUNDARY DETAIL - LOAD BEARING
SCALE: 3/4" = 1'-0"

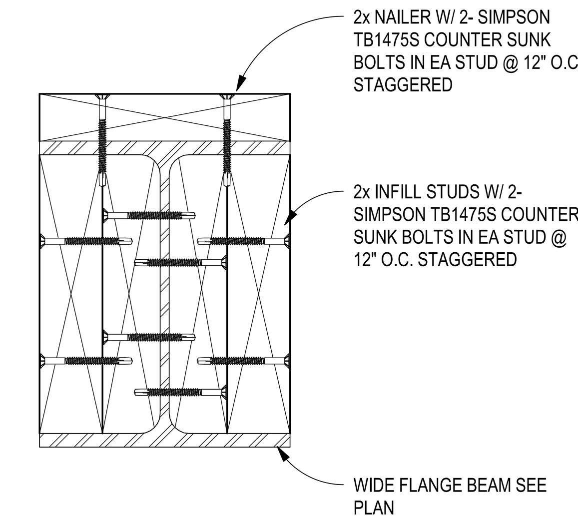

D1 TYPICAL BUILT-UP WIDE FLANGE
SCALE: 3" = 1'-0"

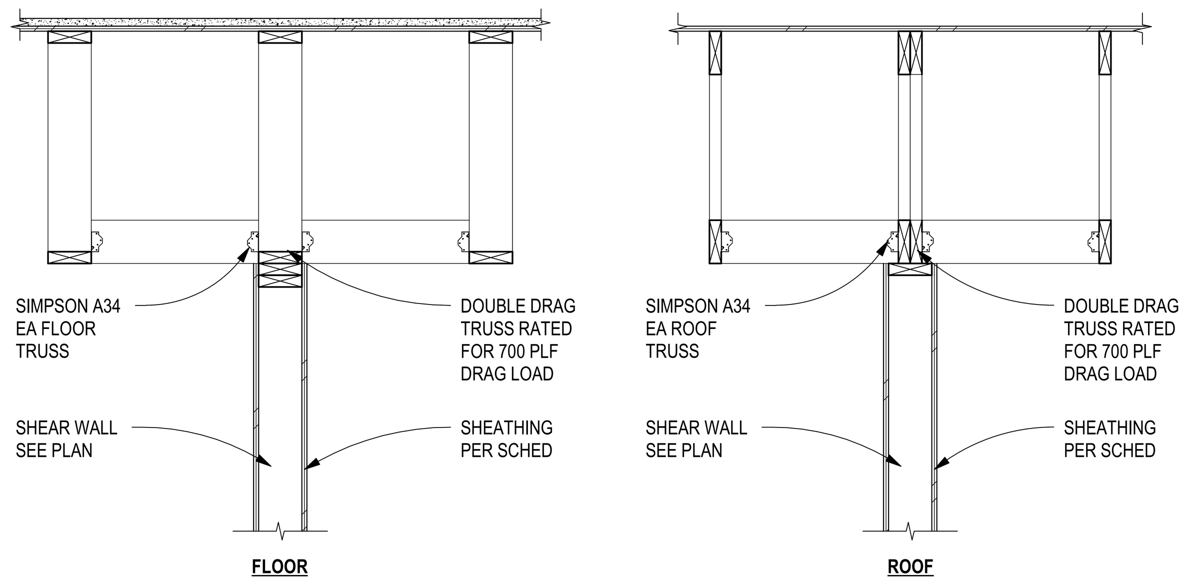

C5 DBL DRAG TRUSS AT SHEAR WALL
SCALE: 3/4" = 1'-0"

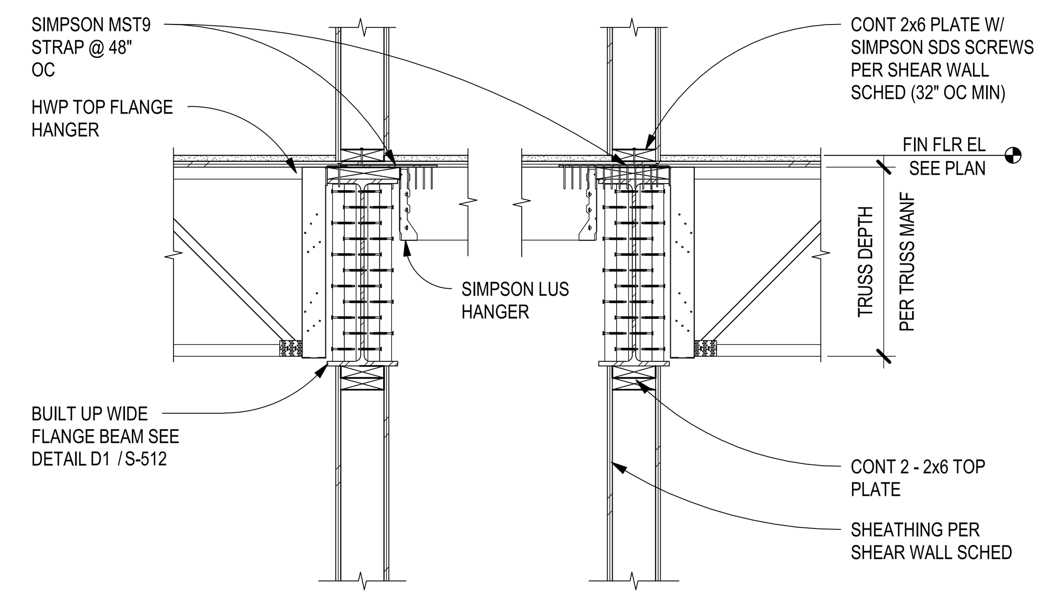

C4 FLOOR FRAMING SECTION AT WF BEAM
SCALE: 3/4" = 1'-0"

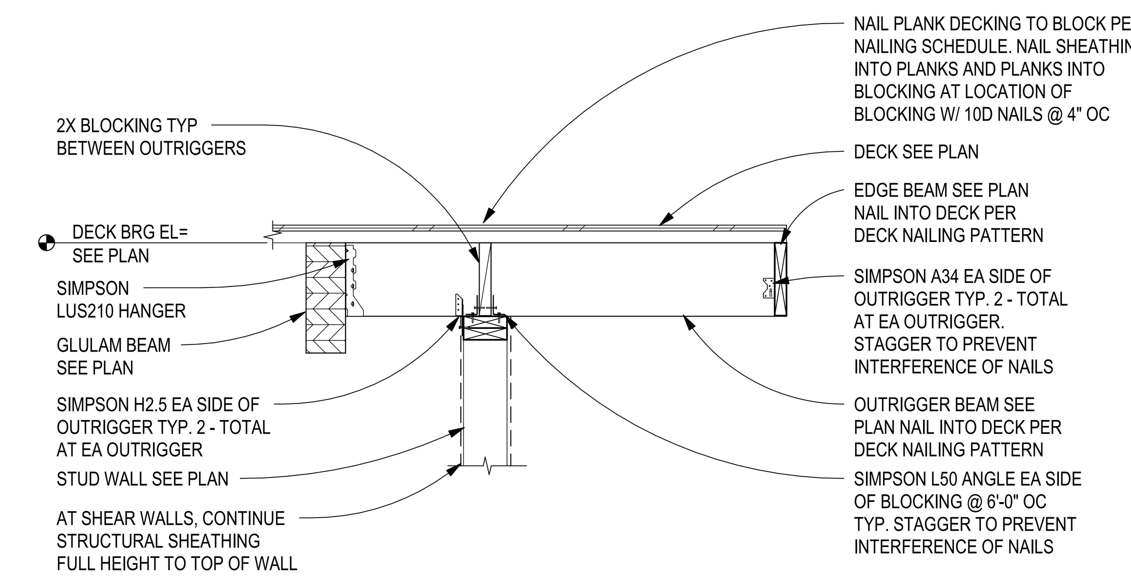

C2 HIGH ROOF BOUNDARY DETAIL - NON-LOAD BEARING
SCALE: 3/4" = 1'-0"

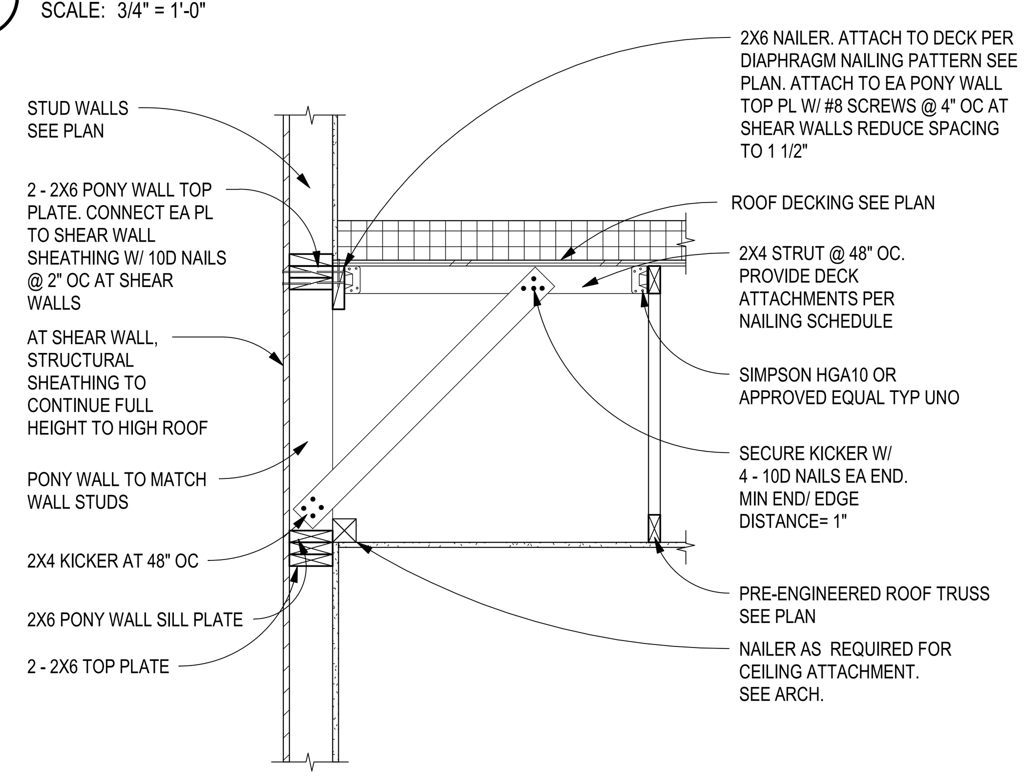

B5 HIGH/LOW ROOF INTERFACE - NON-TRUSS BEARING
SCALE: 3/4" = 1'-0"

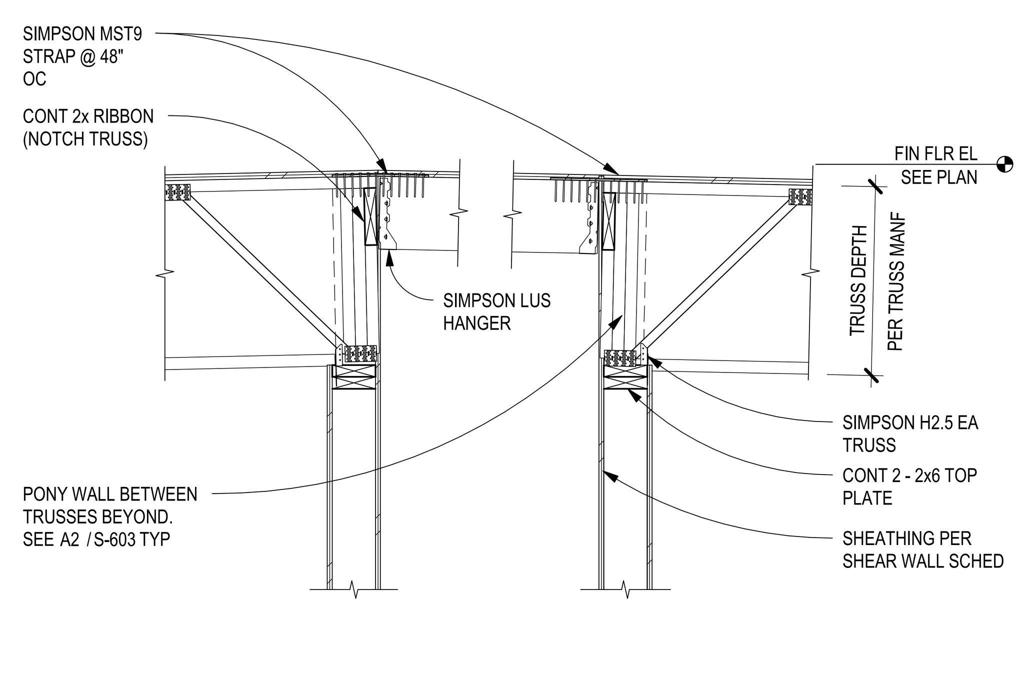

B4 ROOF FRAMING SECTION AT RIDGE
SCALE: 3/4" = 1'-0"

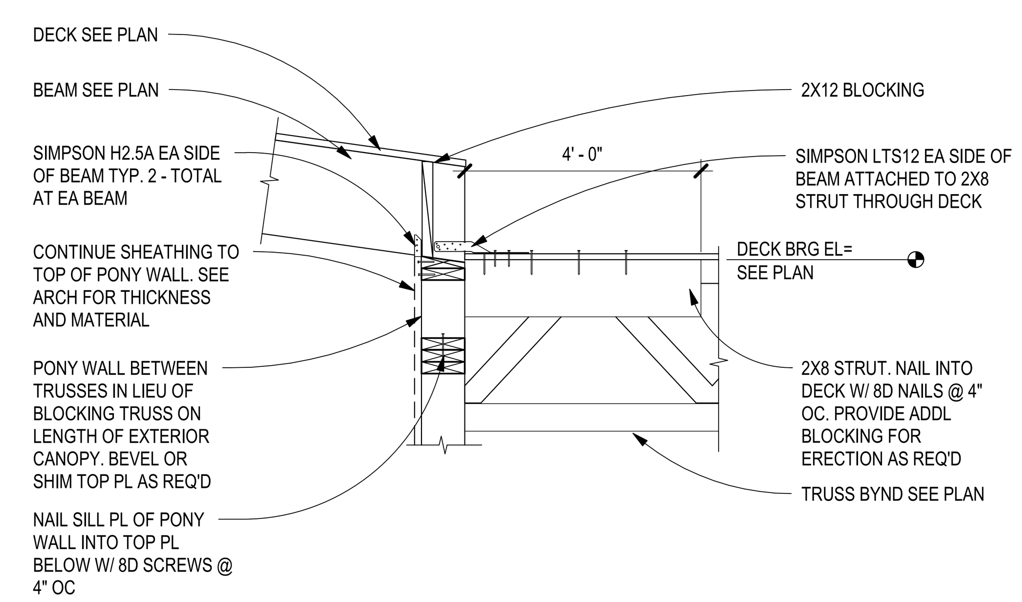

B2 NORTH CANOPY BOUNDARY DETAIL
SCALE: 3/4" = 1'-0"

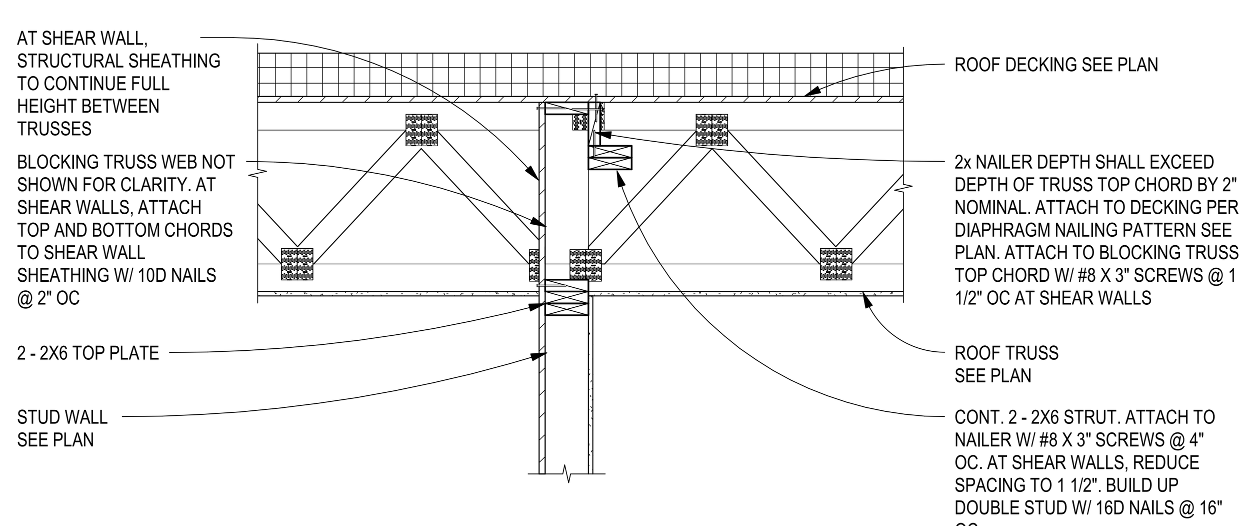

A5 ROOF TRUSS BEARING SECTION - INTERIOR WALL
SCALE: 3/4" = 1'-0"

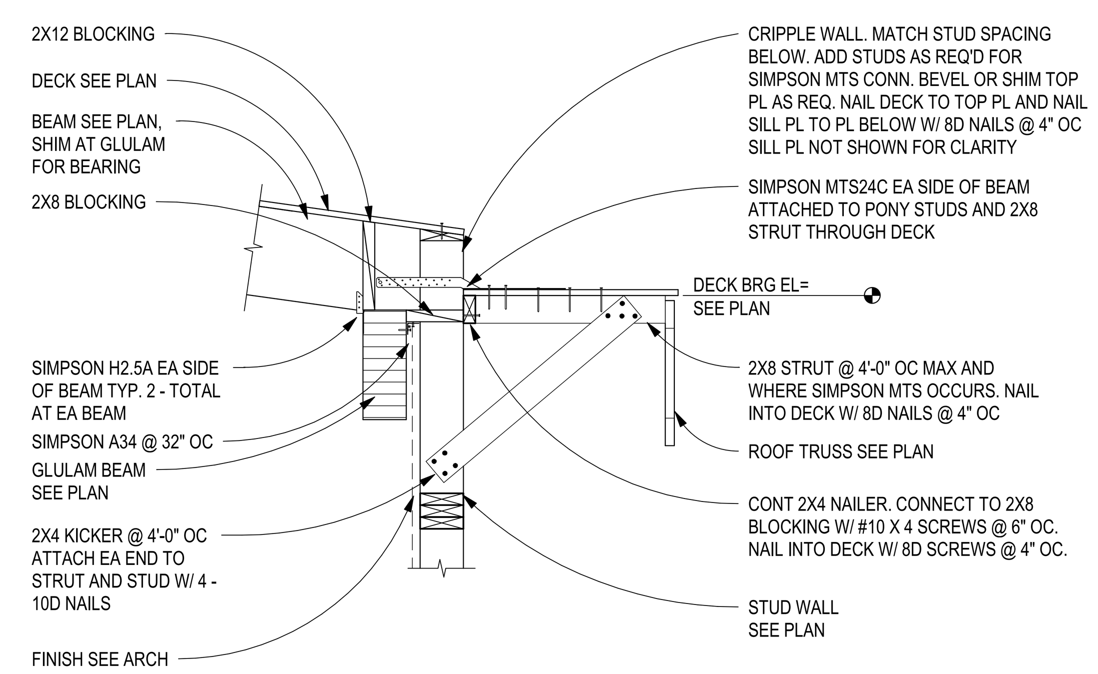

A4 WEST CANOPY BOUNDARY DETAIL
SCALE: 3/4" = 1'-0"

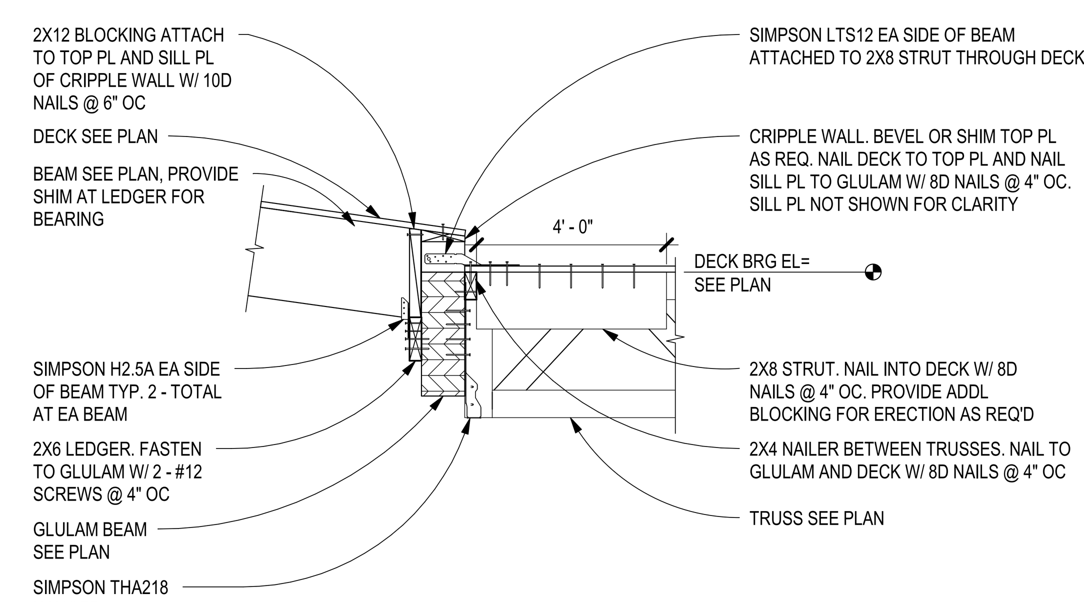

A2 SOUTH CANOPY BOUNDARY DETAIL
SCALE: 3/4" = 1'-0"

Chavez-Grieves consulting engineers, inc.
4700 Lincoln Road NE, Suite 102 • Albuquerque, NM 87109
505-344-4080 • 505-343-8759 fax

STAMP
BENJAMIN L. BURKHARD NEW MEXICO 26142 PROFESSIONAL ENGINEER
11/03/2023
EXP: 12/31/2024

DYRON MURPHY ARCHITECTS, P.C.
4505 Montbel Place NE, Albuquerque, New Mexico 87107

SHIPROCK PINNACLE HOTEL & RESTAURANT
SHIPROCK, NEW MEXICO
100% CONSTRUCTION DOCUMENTS
ISSUED FOR CONSTRUCTION
NOVEMBER 03, 2023

PROJECT NUMBER	DRAWN BY	PROJ MGR
2022.10	ML/ THF	BB/MG

WOOD FRAMING DETAILS
Sheet Title

Sheet Number of
S-512

11/3/2023 6:59:15 PM C:\Revit Projects\M97-198 Shiprock Pinnacle_Hotel_STRUCT_tfragua.rvt
DYRON MURPHY ARCHITECTS, P.C.

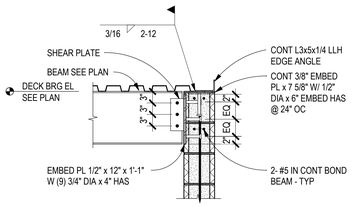

D2 DECK EDGE AT HOTEL ELEVATOR ROOF

SCALE: 3/4" = 1'-0"

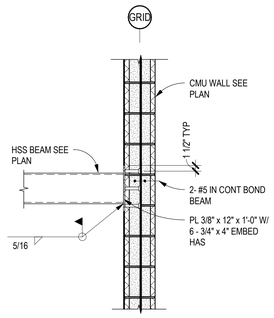

C2 HSS BEAM TO WALL DETAIL

SCALE: 3/4" = 1'-0"

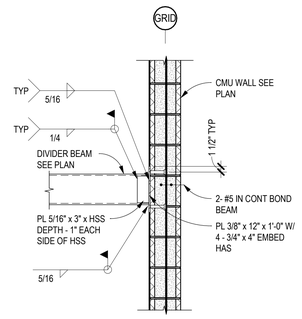

B2 DIVIDER BEAM TO WALL DETAIL

SCALE: 3/4" = 1'-0"

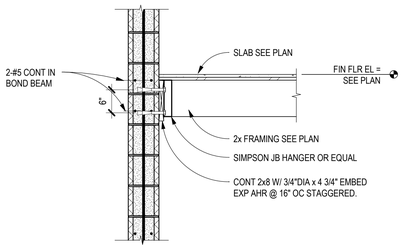

A2 FLOOR CONNECTION AT CMU WALL

SCALE: 3/4" = 1'-0"

Chavez-Grieves consulting engineers, inc.

STAMP

BENJAMIN L. BURKHARD NEW MEXICO 26142 PROFESSIONAL ENGINEER

11/03/2023
EXP: 12/31/2024

DYRON MURPHY ARCHITECTS, P.C.

4505 Montbel Place NE, Albuquerque, New Mexico 87107

SHIPROCK PINNACLE HOTEL & RESTAURANT

SHIPROCK, NEW MEXICO

100% CONSTRUCTION DOCUMENTS

ISSUED FOR CONSTRUCTION

NOVEMBER 03, 2023

PROJECT NUMBER	DRAWN BY	PROJ MGR
2022.10	THF	SL

MASONRY FRAMING SECTIONS AND DETAILS

Sheet Title

Sheet Number of

S-521

11/3/2023 6:59:16 PM C:\Revit Projects\A007-198 Shiprock Pinnacle_Hotel_STRUCT_Engine.rvt
DYRON MURPHY ARCHITECTS, P.C.

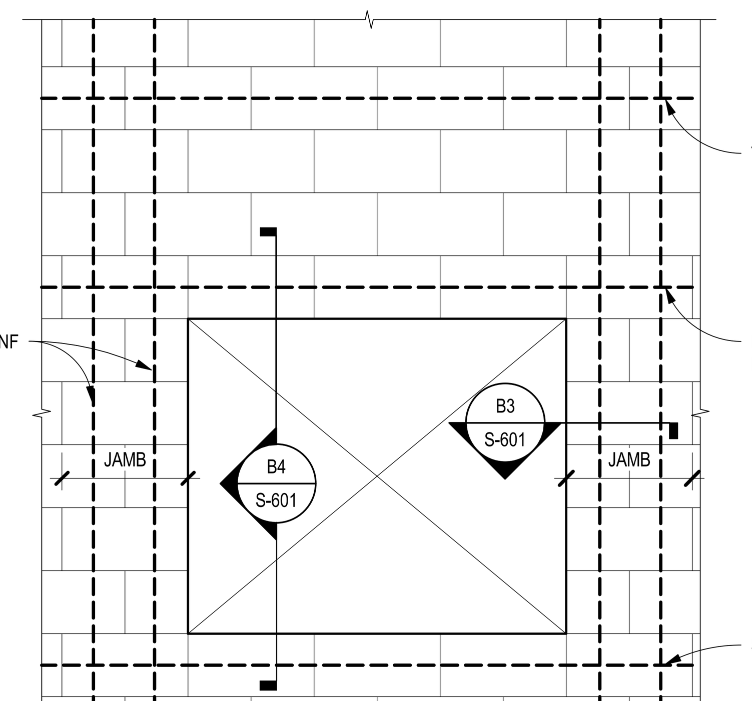

CMU LINTEL SCHEDULE

OPENING WIDTH	WIDTH	DEPTH	LINTEL REINFORCING		SILL		LINTEL JAMB TYPE
			TOP	BOTTOM	DEPTH	REINFORCING	
0' - 0" - 3' - 4"	8"	16"	2 - #5	2 - #5	8"	2 - #5	TYPE A
3' - 5" - 6' - 8"	8"	16"	2 - #5	2 - #5	8"	2 - #5	TYPE A

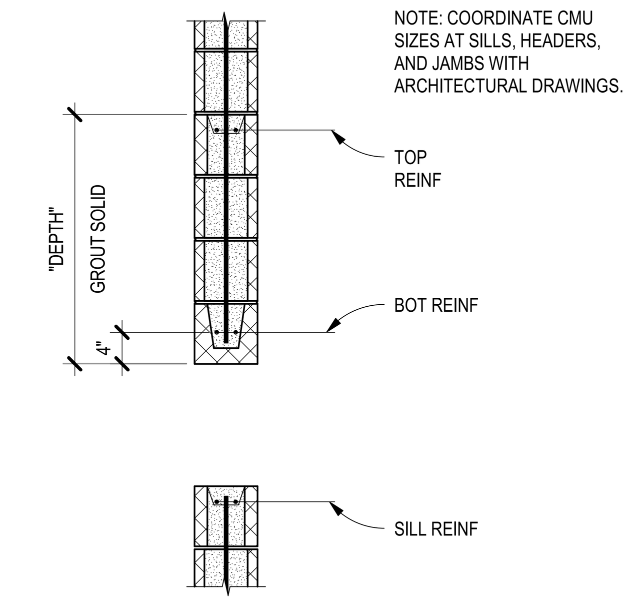

B4 CMU LINTEL OPENING SECTION
SCALE: 3/4" = 1'-0"

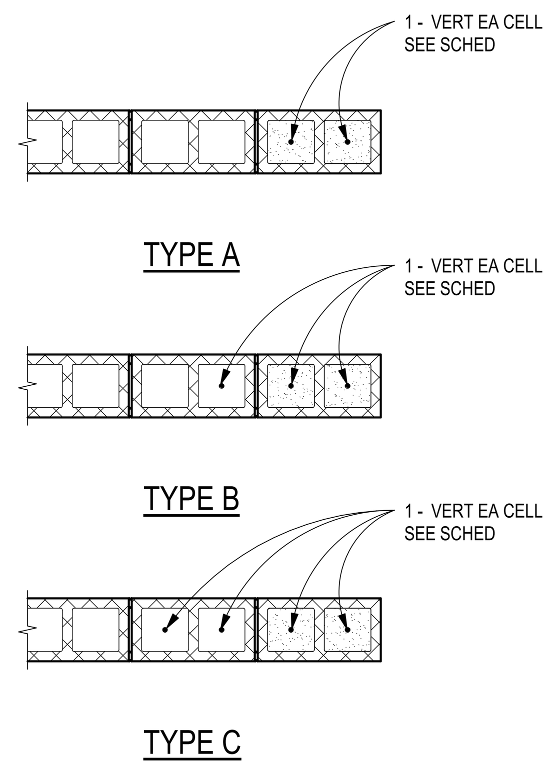

NOTE: SEE TYPICAL CMU PLAN DETAILS SHEET S721 FOR TYPICAL HORIZONTAL REINFORCING REQUIREMENTS.

B3 CMU JAMB TYPES
SCALE: 3/4" = 1'-0"

WOOD STUD LINTEL SCHEDULE

MARK	SPAN	SIZE	STUDS AT BEARING	FULL HEIGHT STUDS	COMMENTS
HL1	0'-0" - 6'-0"	3 - 2x10	3 - 2x6	2 - 2x6	LOAD BEARING WALL
HL2	0'-0" - 6'-0"	3 - 2x6	2 - 2x6	2 - 2x6	NON-LOAD BEARING WALL
HL3	6'-1" - 12'-0"	5 1/2"x24" GLULAM	4 - 2x6	2 - 2x6	LOAD BEARING WALL
RL1	0'-0" - 3'-5"	2 - 2x6	2 - 2x6	2 - 2x6	LOAD BEARING WALL
RL2	3'-6" - 4'-6"	3 - 2x6	2 - 2x6	2 - 2x6	LOAD BEARING WALL
RL3	4'-7" - 6'-11"	3 - 2x10	2 - 2x6	2 - 2x6	LOAD BEARING WALL
RL4	7'-0" - 10'-0"	3 - 2x12	2 - 2x6	2 - 2x6	LOAD BEARING WALL
RL5	10'-0" - 12'-11"	5 1/2"x16" GLULAM	3 - 2x6	2 - 2x6	LOAD BEARING WALL
RL6	0'-0" - 6'-11"	2 - 2x8	2 - 2x6	2 - 2x6	NON-LOAD BEARING WALL
RL7	7'-0" - 15'-11"	5 1/2"x13 1/2" GLULAM	2 - 2x6	2 - 2x6	NON-LOAD BEARING WALL
RL8	6'-0" - 7'-0"	5 1/2"x16" GLULAM	3 - 2x6	2 - 2x6	WEST BALLROOM DOOR

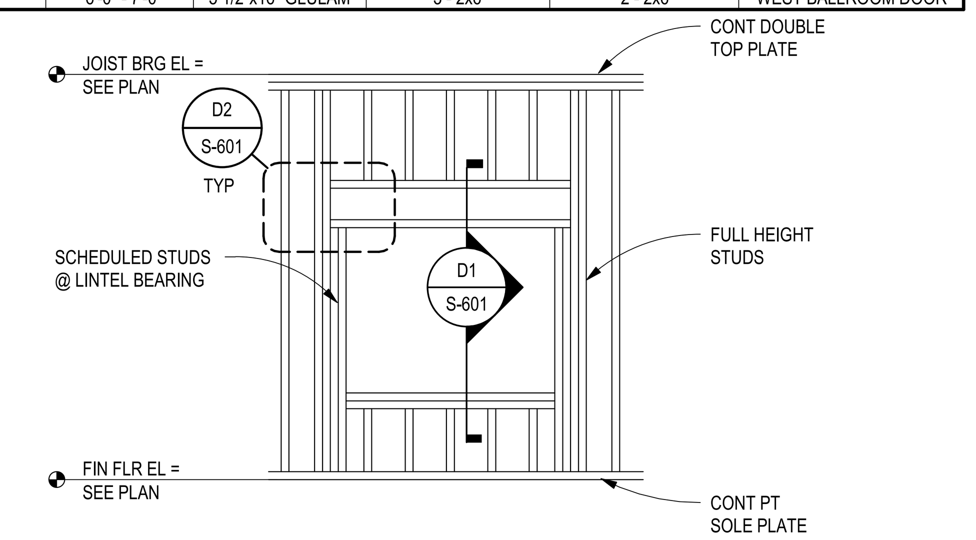

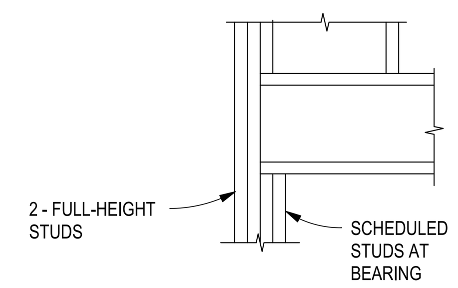

D2 TYPICAL LINTEL ATTACHMENT
SCALE: 3/4" = 1'-0"

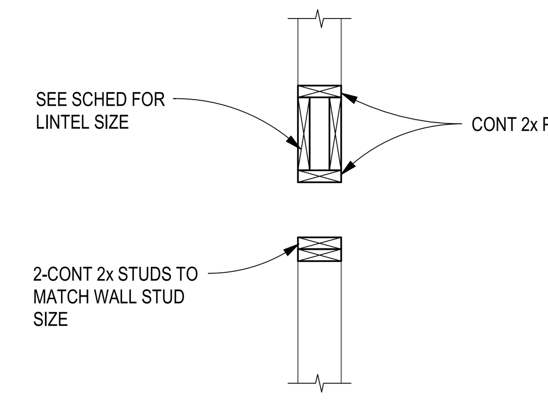

D1 WOOD LINTEL SECTION
SCALE: 3/4" = 1'-0"

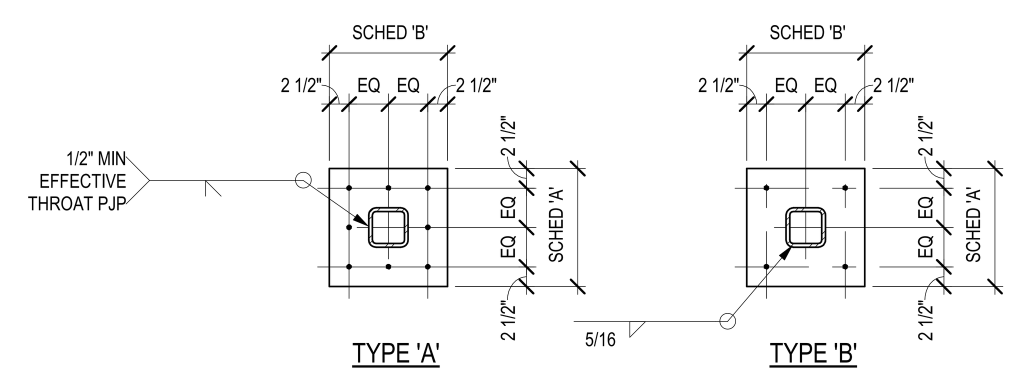

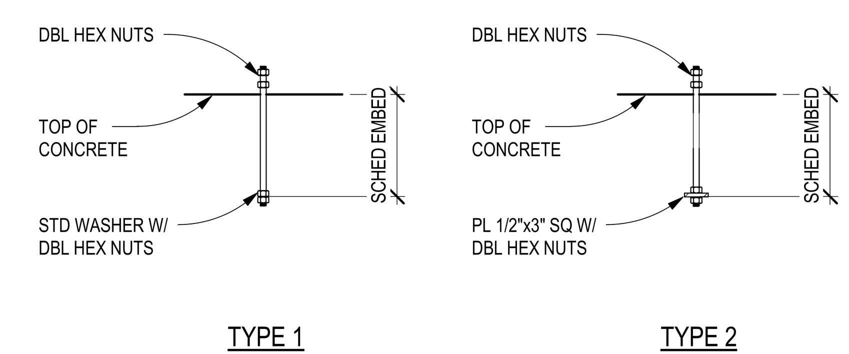

TIMBER POST CONNECTION

COLUMN SIZE	COLUMN BASE CONNECTION
6x6	SIMPSON CB66
5x5	SIMPSON CB5-4.5
4x4	SIMPSON BD44

BASE PLATE SCHEDULE

BASE PLATE				ANCHOR BOLTS	
MARK	TYPE	SIZE "T"x"A"x"B"	MATERIAL	F1554 ANCHOR BOLTS	TYPE
BP1	A	PL 1 1/4" x 14" x 1'-2"	A572 GR50	4 - 3/4" DIA x 8"	2
BP2	B	PL 1" x 13" x 13"	A36	4 - 3/4" DIA x 8"	1

NOTE: ALL BASEPLATES TO BEAR ON 2" OF NON-SHRINK GROUT

NAILING SCHEDULE

CONNECTION	NAILING
JOIST TO SILL OR GIRDER, TOENAIL	3-8D
BRIDGING TO JOIST, TOENAIL EACH END	2-8D
1" x 6" SUBFLOOR OR LESS TO EACH JOIST, FACE NAIL	3-8D
WIDER THAN 1" x 6" SUBFLOOR TO EACH JOIST, FACE NAIL	3-8D
2" SUBFLOOR TO JOIST OR GIRDER, BLIND AND FACE NAIL	2-16D
SOLE PLATE TO JOIST OR BLOCKING, FACE NAIL	16D AT 16"OC
TOP PLATE TO STUD, END NAIL	2-16D
STUD TO SOLE PLATE	4-8, TOENAIL OR 2-16D, END NAIL
DOUBLE STUDS, FACE NAIL	16D AT 24" OC
DOUBLE TOP PLATES, FACE NAIL	16D AT 16"OC
TOP PLATES, LAP AND INTERSECTIONS, FACE NAIL	2-16D
CONTINUOUS HEADER, TWO PIECES	16D AT 16"OC ALONG EACH EDGE
CEILING JOISTS TO PLATE, TOENAIL	3-8D
CONTINUOUS HEADER TO STUD, TOENAIL	4-8D
CEILING JOISTS, LAP OVER PARTITIONS, FACE NAIL	3-16D
CEILING JOISTS TO PARALLEL RAFTERS, FACE NAIL	3-16D
RAFTER TO PLATE, TOENAIL	3-8D
1" BRACE TO EACH STUD AND PLATE, FACE NAIL	2-8D
1" x 8" SHEATHING OR LESS TO EACH BEARING, FACE NAIL	2-8D
WIDER THAN 1" x 8" SHEATHING TO EACH BEARING, FACE NAIL	3-8D
BUILT-UP CORNER STUDS	16D AT 24"OC
BUILT-UP GIRDER AND BEAM	20D AT 32"OC TOP AND BOT AND STAGGERED 2-20D AT ENDS AND AT EACH SPLICE
2" PLANKS	2-16D AT EA BRG
PLYWOOD AND PARTICLEBOARD:	
SUBFLOOR, ROOF AND WALL SHEATHING TO FRAMING:	
1/2" AND LESS	6D
19/32" - 3/4"	8D 0R 6D
7/8" - 1"	8D
1 1/8" - 1 1/4"	10D4 OR 8D5
COMBINATION SUBFLOOR - UNDERLAYMENT (TO FRAMING:)	
3/4" AND LESS	6D
7/8" - 1"	8D
1 1/8" - 1 1/4"	10D OR 8D
PANEL SIDING (TO FRAMING):	
1/2" OR LESS	6D
5/8"	8D
FIBERBOARD SHEATHING:	
1/2"	NO 11 GALV 6D NO 16 GALV
25/32"	NO 11 GALV 8D NO 16 GALV
2X TONGUE AND GROOVE DECKING TO SUPPORTS	16D TOENAIL THRU TONGUE AND 16D FACENAIL

DECK SCHEDULE

MARK	METAL DECK				DECK ATTACHMENTS			COMMENTS
	HEIGHT	TYPE	GAGE	FINISH	ATTACH PERP TO RIBS	ATTACH PARALLEL TO RIBS	ATTACH SIDELAPS	
RD1	1 1/2"	B	20	G60 GALVANIZED	5/8" DIA PUDDLE WELD ON A 36/4 PATTERN	5/8" DIA PUDDLE WELDS @ 12" OC	#10 SCREWS @ 12" OC	

CONCRETE REINFORCING LAP SPLICE SCHEDULE

REINFORCEMENT TYPE	#6 AND SMALLER (NUMBER OF BAR DIAMETERS)			#7 THROUGH #11 (NUMBER OF BAR DIAMETERS)			MINIMUM LENGTH (IN)	COMMENTS
	3000 PSI	4000 PSI	5000 PSI	3000 PSI	4000 PSI	5000 PSI		
CONTINUOUS WALL FOOTINGS AND HORIZONTAL REINFORCEMENT IN SITE WALLS AND STEMWALLS	30	30	30	30	30	30	18	
CONCRETE WALLS: ALL VERTICAL REINFORCEMENT	57	50	45	72	62	56	12	
CONCRETE WALLS: ALL HORIZONTAL REINFORCEMENT, EXCLUDING SITE WALLS AND STEMWALLS	75	65	58	93	81	72	12	
CONCRETE COLUMNS	57	50	45	72	62	56	12	
TOP FLEXURAL REINFORCEMENT, INCLUDING BEAMS, GRADE BEAMS, AND COMBINED COLUMN FOOTINGS	75	65	58	93	81	72	12	
BOTTOM FLEXURAL REINFORCEMENT, INCLUDING BEAMS, GRADE BEAMS, AND COMBINED COLUMN FOOTINGS	57	50	45	72	62	56	12	
MINIMUM EMBEDMENT OF STANDARD HOOKS INTO CONCRETE BASE	22	19	17	22	19	17	6	ALLOWED FOR BARS LARGER THAN #11
SLABS ON GRADE	30	30	30	30	30	30	12	
SLABS ON METAL DECK	30	30	30	30	30	30	12	WWF MINIMUM LAP LENGTH = 6 IN

NOTES:
1. LAP SPLICES SHALL NOT BE PERMITTED FOR BARS LARGER THAN #11 IN CONCRETE OR #9 IN MASONRY. SUCH SPLICES SHALL USE APPROVED MECHANICAL CONNECTIONS
2. LAP SPLICES FOR BUNDLED BARS SHALL BE IN ACCORDANCE WITH ACI 318
3. LAP LENGTHS FOR LIGHTWEIGHT CONCRETE SHALL BE INCREASED BY 33%
4. LAP LENGTHS FOR EPOXY COATED BARS SHALL BE INCREASED BY 50%
5. FOR INTERMEDIATE OR LARGER VALUES OF F'c, USE THE CLOSEST LOWER VALUE IN THE TABLE. DO NOT INTERPOLATE

MASONRY REINFORCING LAP SPLICE SCHEDULE

	#3	#4	#5	#6	#7	#8	#9	COMMENTS
6" BLOCK WITH 1 - LAYER OF REINFORCEMENT	32	40	51	72	- -	- -	- -	
8" BLOCK WITH 1 - LAYER OF REINFORCEMENT	32	29	36	58	68	72	- -	
8" BLOCK WITH 2 - LAYERS OF REINFORCEMENT	51	68	72	72	- -	- -	- -	
12" BLOCK WITH 1 - LAYER OF REINFORCEMENT	32	24	23	37	43	57	65	
12" BLOCK WITH 2 - LAYERS OF REINFORCEMENT	51	68	72	72	72	- -	- -	
16" BLOCK WITH 1 - LAYER OF REINFORCEMENT	32	24	23	30	32	42	48	
16" BLOCK WITH 2 - LAYERS OF REINFORCEMENT	51	68	72	72	72	72	72	

NOTES:
1. BARS LARGER THAN #9 SHALL UTILIZE MECHANICAL CONNECTIONS FOR SPLICES

CONCRETE PEDESTAL SCHEDULE

MARK	SIZE		REINFORCING		COMMENTS
	WIDTH	LENGTH	VERTICAL	TIES	
CC1010	10"	10"	4 - #5	#3 @ 8" OC	
CC3619	1' - 7"	3' - 0"	12 - #7	#3 @ 14" OC	
CC3620	1' - 8"	3' - 0"	12 - #7	#3 @ 14" OC	

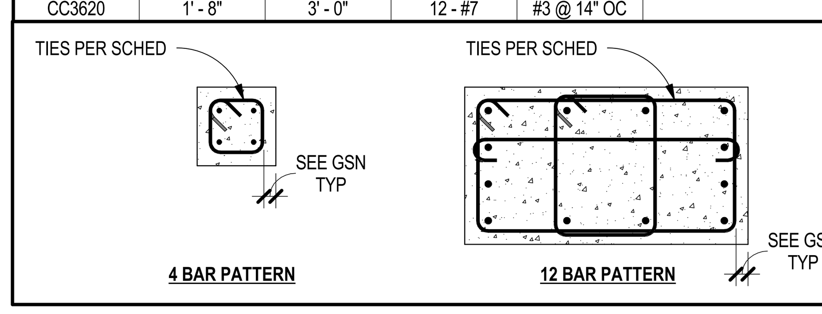

SLAB-ON-GRADE SCHEDULE

MARK	SLAB		REINFORCING	BEARING STRATA	COMMENTS
	THICKNESS	MATL			
S5	5"	NORMAL WEIGHT CONC	#4 @ 18" OC EACH WAY	15 MIL VAPOR RETARDER OVER SUBGRADE PER GEN STRUCT NOTES	

WALL SCHEDULE

MARK	WALL	REINFORCING		COMMENTS
		VERTICAL	HORIZONTAL	
WC8	8" CONC	#4 @ 12" OC	#4 @ 12" OC	
WC8A	8" CONC	#7 @ 24" OC	#4 @ 12" OC	
WM8	8" CMU	#7 @ 24" OC	2- #5 IN BOND BEAM @ 48" OC	
WM8A	8" CMU	#5 @ 24" OC	STD LADDER TYPE JOINT REINF @ 16" OC	

SPOT FOOTING SCHEDULE

MARK	SIZE			REINFORCING	COMMENTS
	WIDTH	LENGTH	DEPTH		
F4	4' - 0"	4' - 0"	1' - 0"	4 - #5 EA WAY BOT	
F5	5' - 0"	5' - 0"	1' - 6"	<varies>	
F6	6' - 0"	6' - 0"	1' - 6"	6 - #5 EA WAY BOT	
F9	9' - 0"	9' - 0"	1' - 6"	12 - #5 EA WAY TOP & BOT / 5 - #5 EA WAY BOT	

WALL FOOTING SCHEDULE

MARK	SIZE		REINFORCING		COMMENTS
	WIDTH	DEPTH	CONTINUOUS	TRANSVERSE	
WF1	1' - 4"	1' - 0"	3- #4 BOT	#4 @ 18" OC BOT	
WF2	4' - 0"	2' - 0"	5- #5 TOP & BOT	#4 @ 18" OC TOP & #7 @ 12" OC BOT	
WF3	3' - 0"	1' - 0"	4- #4	#5 @ 18" OC	LOAD BEARING
WF4	4' - 0"	1' - 6"	5- #4 T+B	#5 @ 12" OC TOP & BOT	LOAD BEARING

Chavez-Grieves
consulting engineers, inc.
4700 Lincoln Road NE, Suite 102 • Albuquerque, NM 87109
505-344-4080 • 505-343-8759 fax

STAMP
BENJAMIN L. BURKHARD
NEW MEXICO
26142
PROFESSIONAL ENGINEER
11/03/2023
EXP: 12/31/2024

DYRON MURPHY ARCHITECTS, P.C.
4505 Montbel Place NE, Albuquerque, New Mexico 87107

SHIPROCK PINNACLE HOTEL & RESTAURANT
SHIPROCK, NEW MEXICO
100% CONSTRUCTION DOCUMENTS
ISSUED FOR CONSTRUCTION
NOVEMBER 03, 2023

PROJECT NUMBER	DRAWN BY	PROJ MGR
2022.10	ML / THF	BB/MG

SCHEDULES
Sheet Title

Sheet Number of
S-601

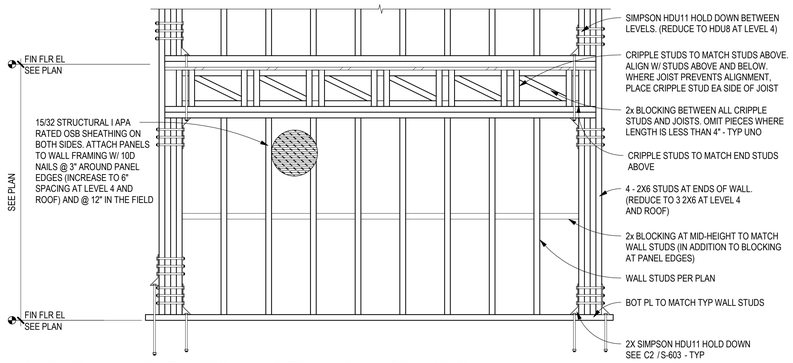

D5 SHEAR WALL ELEVATION - HOTEL - LOAD-BEARING

SCALE: 3/4" = 1'-0"

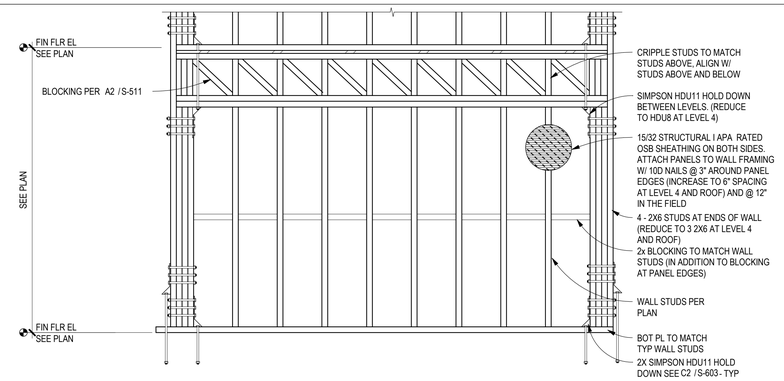

D3 SHEAR WALL ELEVATION - HOTEL - NON-LOAD BEARING

SCALE: 3/4" = 1'-0"

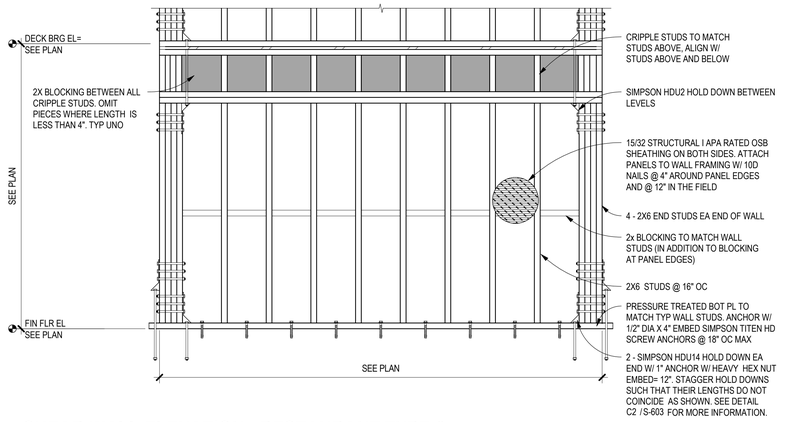

C5 SHEAR WALL ELEVATION - RESTAURANT TYPE 6

SCALE: 3/4" = 1'-0"

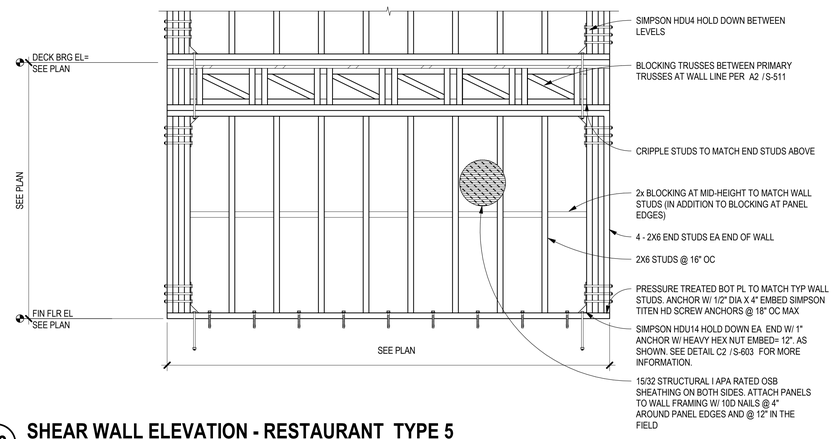

C3 SHEAR WALL ELEVATION - RESTAURANT TYPE 5

SCALE: 3/4" = 1'-0"

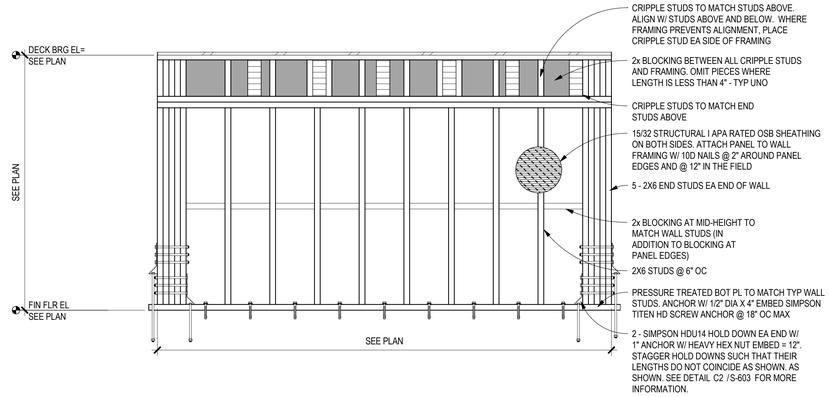

B5 SHEAR WALL ELEVATION - RESTAURANT TYPE 4

SCALE: 3/4" = 1'-0"

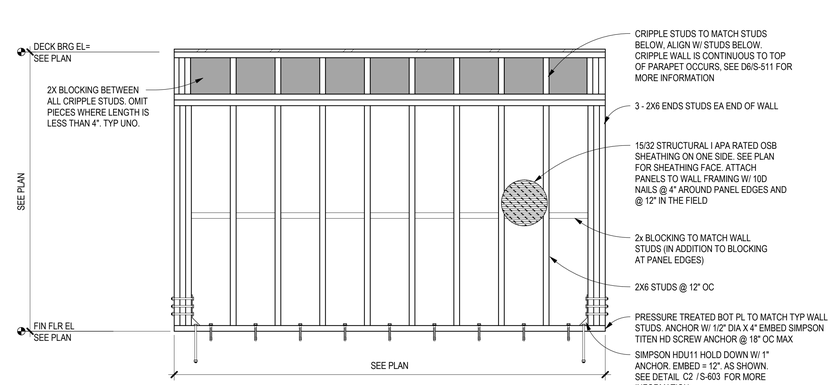

B3 SHEAR WALL ELEVATION - RESTAURANT TYPE 3

SCALE: 3/4" = 1'-0"

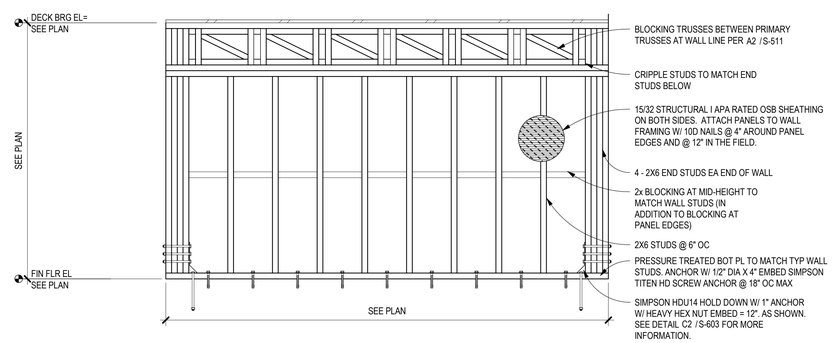

A5 SHEAR WALL ELEVATION - RESTAURANT TYPE 2

SCALE: 3/4" = 1'-0"

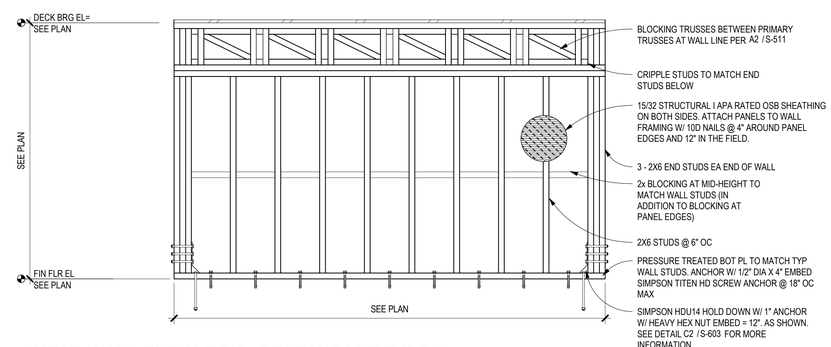

A3 SHEAR WALL ELEVATION - RESTAURANT TYPE 1

SCALE: 3/4" = 1'-0"

Chavez-Grieves consulting engineers, inc.
4700 Lincoln Road NE, Suite 103 • Albuquerque, NM 87109
505-344-4080 • 505-343-8755 fax

STAMP

BENJAMIN L. BURKHARD
NEW MEXICO
26142
PROFESSIONAL ENGINEER
11/03/2023
EXP: 12/31/2024

DYRON MURPHY ARCHITECTS, P.C.
4505 Montbel Place NE, Albuquerque, New Mexico 87107

SHIPROCK PINNACLE HOTEL & RESTAURANT

SHIPROCK, NEW MEXICO

100% CONSTRUCTION DOCUMENTS

ISSUED FOR CONSTRUCTION

NOVEMBER 03, 2023

PROJECT NUMBER	DRAWN BY	PROJ MGR
2022.10	ML / THF	BB/MG

SHEAR WALL ELEVATIONS

Sheet Title

Sheet Number of

S-602

11/3/2023 6:59:29 PM C:\Revit Projects\MY-168 Shiprock Pinnacle_Hotel_STRUCT_Bhagat.rvt
DYRON MURPHY ARCHITECTS, P.C.

HOLD DOWN	ANCHOR BOLT	CAST IN PLACE EMBED DEPTH	EPOXY EMBED DEPTH
2X HDU 11	1" DIA	12"	20"
HDU 14	1" DIA	12"	20"

NOTE:
WHERE 2 HOLD DOWNS OCCUR, PROVIDE A HOLD DOWN ON EACH SIDE OF END WALL STUDS

NOTE:
SHEAR WALL TO BE SHORTENED UP TO A MAX OF 9" TO ACCOMODATE DOUBLE HOLD DOWNS. STAGGER HOLD DOWNS VERTICALLY WHERE INDICATED IN SHEAR WALL ELEVATIONS.

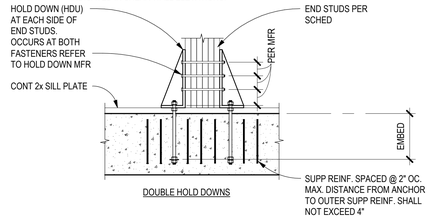

DOUBLE HOLD DOWNS

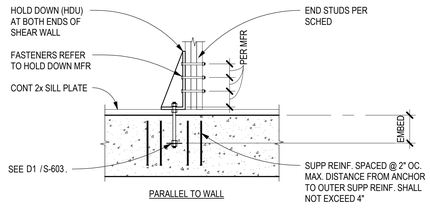

PARALLEL TO WALL

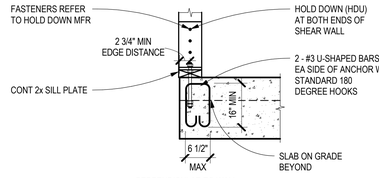

PERPENDICULAR TO WALL

C2 HOLD DOWN DETAIL AND SCHEDULE
SCALE: 3/4" = 1'-0"

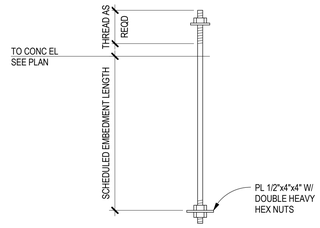

D1 HOLD DOWN ANCHOR DETAIL
SCALE: 3/4" = 1'-0"

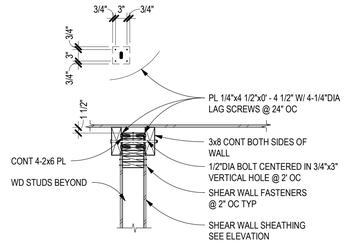

@ INTERIOR (NO PARAPET)

C1 SHEAR WALL SECTION @ ROOF
SCALE: 3/4" = 1'-0"

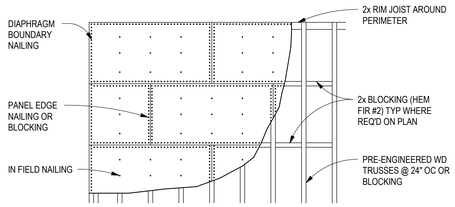

B2 ROOF SHEATHING NAILING DETAIL
SCALE: 3/4" = 1'-0"

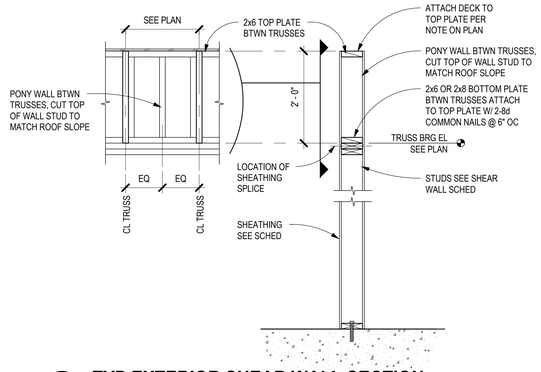

A2 TYP EXTERIOR SHEAR WALL SECTION
SCALE: 3/4" = 1'-0"

Chavez-Grieves consulting engineers, inc.
4700 Lincoln Road NE, Suite 103 • Albuquerque, NM 87109
505-344-4080 • 505-343-8755 fax

STAMP

BENJAMIN L. BURKHARD
NEW MEXICO
26142
PROFESSIONAL ENGINEER
11/03/2023
EXP: 12/31/2024

DYRON MURPHY ARCHITECTS, P.C.

4505 Montbel Place NE, Albuquerque, New Mexico 87107

SHIPROCK PINNACLE HOTEL & RESTAURANT

SHIPROCK, NEW MEXICO

100% CONSTRUCTION DOCUMENTS

ISSUED FOR CONSTRUCTION

NOVEMBER 03, 2023

PROJECT NUMBER	DRAWN BY	PROJ MGR
2022.10	ML / THF	BB/MG

SHEAR WALL DETAIL

Sheet Title

Sheet Number of

S-603

11/3/2023 6:00:28 PM C:\Revit Projects\M07-188 Shiprock Pinnacle_Hotel_STRUCT_R\ryan.rvt
DYRON MURPHY ARCHITECTS, P.C.

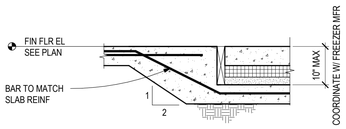

D6 DEPRESSED SLAB AT FREEZER
SCALE: 3/4" = 1'-0"

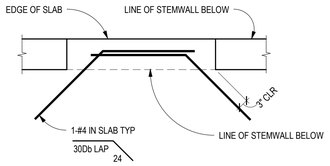

PLAN

D5 TYPICAL SLAB REINF AT OPNG
SCALE: NTS

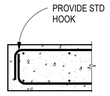

END WALL

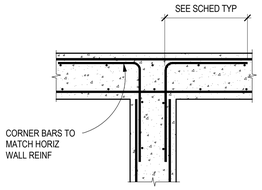

WALL TEE INTERSECTION

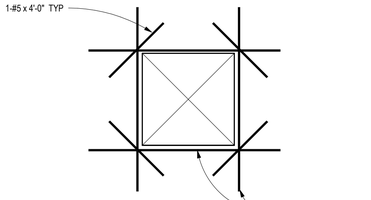

NOTE:
1. OMIT REINF FOR ROUND OPNGS 6" DIA OR LESS AND RECTANGULAR OPNGS 4" OR LESS
2. PROVIDE BARS SHOWN ON EACH FACE AT WALL WITH DOUBLE MAT REINF

D3 TYPICAL OPNG IN CONC WALL
SCALE: NTS

NOTE:
AT CONTRACTOR'S OPTION, A PLASTIC JOINT FORMER MAY BE INSTALLED INSTEAD OF THE SAWCUT

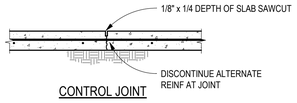

CONTROL JOINT

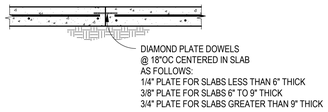

CONSTRUCTION JOINT

D2 TYPICAL SLAB JOINT
SCALE: NTS

NOTE: SEE ARCH FOR RISE AND RUN

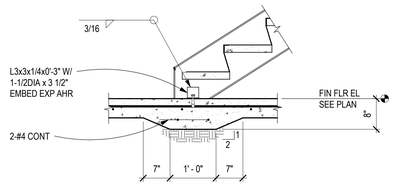

E1 TYPICAL STAIR BASE DETAIL
SCALE: 3/4" = 1'-0"

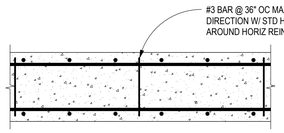

PLAN VIEW

D1 TIE REINF IN WALL
SCALE: 3/4" = 1'-0"

NOTE:
SEE GENERAL FOUNDATION NOTES FOR MORE COMPLETE EXCAVATION INFORMATION

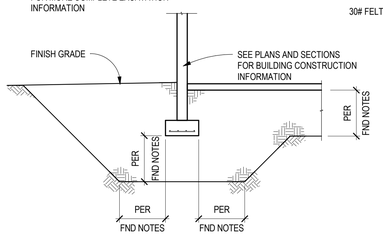

C6 TYPICAL FND EXCAVATION DETAIL
SCALE: NTS

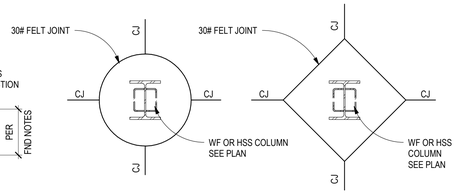

NOTE : CONTRACTOR'S OPTION FOR TYPE TO BE USED. PLACE BLOCKOUTS AT ALL COLUMNS .

NOTE: ENLARGED BLOCKOUTS MAY BE REQUIRED AT BRACED FRAME LOCATIONS FOR GUSSET PLATE CLEARANCE.

C5 TYPICAL COLUMN BLOCKOUT
SCALE: NTS

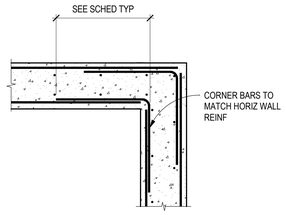

WALL CORNER

NOTE: REINFORCING SHOWN ON FOUNDATION SECTIONS AND SPECIFICALLY REFERENCED DETAILS SHALL TAKE GOVERN OVER REINFORCING IN STANDARD DETAILS.

C4 TYPICAL DOUBLE MAT WALL REINF
SCALE: NTS

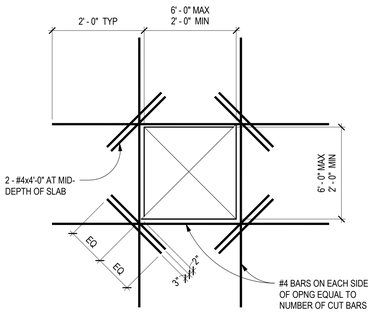

PLAN

C3 TYPICAL OPNG IN SLAB-ON-GRADE
SCALE: 3/4" = 1'-0"

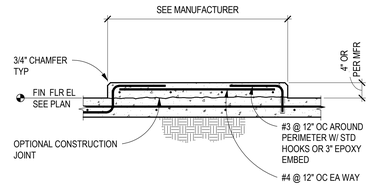

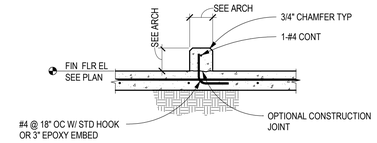

C2 TYPICAL CURB AND PAD
SCALE: 3/4" = 1'-0"

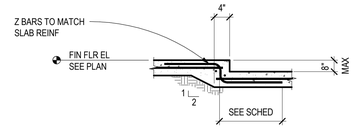

C1 TYPICAL DEPRESSED SLAB
SCALE: 3/4" = 1'-0"

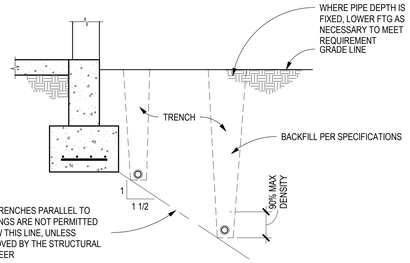

PIPE AND TRENCHES PARALLEL TO FOOTINGS

NOTE: ALL PIPE SLEEVES SHALL BE 2" LARGER THAN PIPE

NOTES:
1. FOR PIPES MORES THAN 3' - 0" BELOW BOTTOM OF FTG USE COMPACTED FILL PER SPECIFICATIONS.
2. TRENCHES AND PIPES ARE NOT PERMITTED BELOW COLUMN FTGS

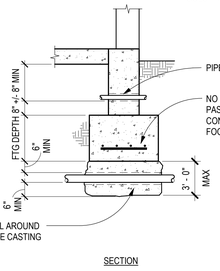

SECTION

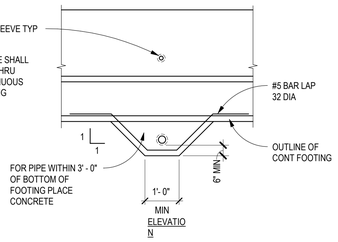

ELEVATION

PIPE AND TRENCHES TRANSVERSE TO FOOTINGS

A6 TYPICAL PIPE PENETRATION AND TRENCH DETAILS
SCALE: NTS

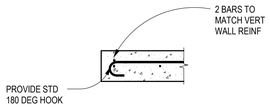

END WALL

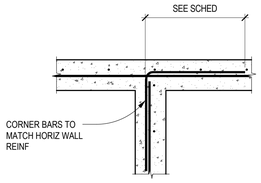

WALL TEE INTERSECTION

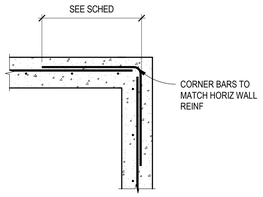

WALL CORNER

NOTE: REINFORCING SHOWN ON FOUNDATION SECTIONS AND SPECIFICALLY REFERENCED DETAILS SHALL TAKE GOVERN OVER REINFORCING IN STANDARD DETAILS.

A4 TYPICAL SINGLE MAT WALL REINF
SCALE: NTS

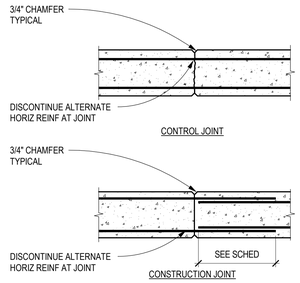

CONSTRUCTION JOINT

B3 TYPICAL WALL JOINT DETAIL
SCALE: NTS

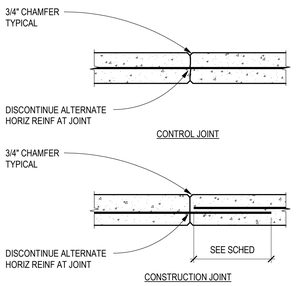

CONSTRUCTION JOINT

A3 TYPICAL WALL JOINT DETAIL
SCALE: NTS

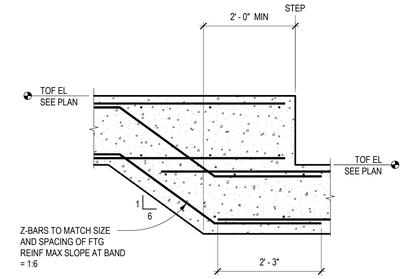

AT COMBINED COLUMN AND SHEAR WALL FOOTINGS

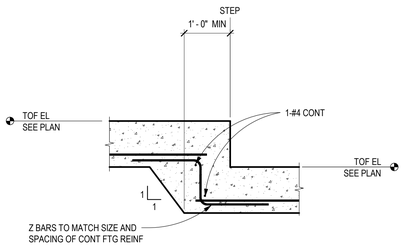

AT STEMWALL AND NON-SHEAR WALL FOOTINGS

A2 TYPICAL STEPPED FOOTING DETAIL
SCALE: NTS

Chavez-Grieves consulting engineers, inc.
4100 Lincoln Road NE, Suite 100 • Albuquerque, NM 87108
505-344-4080 • 505-343-8705 fax

STAMP

BENJAMIN L. BURKHARD
NEW MEXICO
26142
PROFESSIONAL ENGINEER
11/03/2023
EXP: 12/31/2024

DYRON MURPHY ARCHITECTS, P.C.
4505 Montbel Place NE, Albuquerque, New Mexico 87107

SHIPROCK PINNACLE HOTEL & RESTAURANT

SHIPROCK, NEW MEXICO

100% CONSTRUCTION DOCUMENTS

ISSUED FOR CONSTRUCTION

NOVEMBER 03, 2023

PROJECT NUMBER	DRAWN BY	PROJ MGR
2022.10	ML / THF	BB/MG

TYPICAL CONCRETE DETAILS

Sheet Title

Sheet Number

of

S-701

11/3/2023 6:59:28 PM C:\Revit Projects\R21-108 Shiprock Pinnacle_Hotel_STRUCT_Bhagan.rvt
DYRON MURPHY ARCHITECTS, P.C.

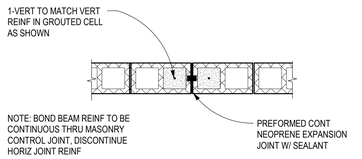

E2 TYPICAL CMU CNRTL JOINT (MCJ)

SCALE: 3/4" = 1'-0"

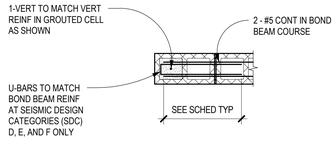

BOND BEAM AT WALL END

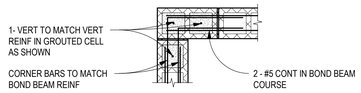

BOND BEAM AT WALL CORNER

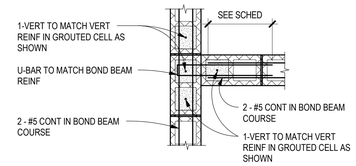

BOND BEAM AT WALL TEE

C2 TYPICAL 8" CMU PLAN DETAILS

SCALE: 3/4" = 1'-0"

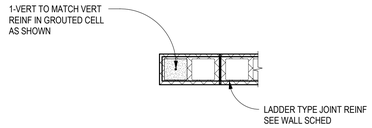

JOINT REINFORCING AT WALL END

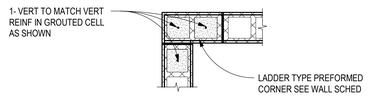

JOINT REINF AT WALL CORNER

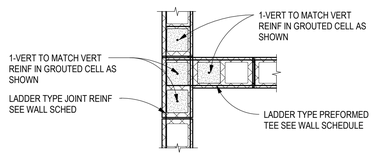

JOINT REINFORCING AT WALL TEE

A2 TYPICAL 8" CMU PLAN DETAILS

SCALE: 3/4" = 1'-0"

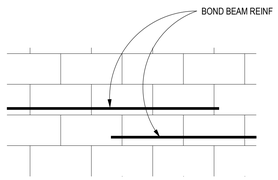

A3 TYPICAL STEP IN BOND BEAM

SCALE: 3/4" = 1'-0"

Chavez-Grieves consulting engineers, inc.

STAMP

BENJAMIN L. BURKHARD NEW MEXICO 26142 PROFESSIONAL ENGINEER

11/03/2023
EXP: 12/31/2024

DYRON MURPHY ARCHITECTS, P.C.

4505 Montbel Place NE, Albuquerque, New Mexico 87107

SHIPROCK PINNACLE HOTEL & RESTAURANT

SHIPROCK, NEW MEXICO

100% CONSTRUCTION DOCUMENTS

ISSUED FOR CONSTRUCTION

NOVEMBER 03, 2023

PROJECT NUMBER	DRAWN BY	PROJ MGR
2022.10	ML / THF	BB/MG

TYPICAL MASONRY DETAILS

Sheet Title

Sheet Number of

S-721

DYRON MURPHY ARCHITECTS, P.C.

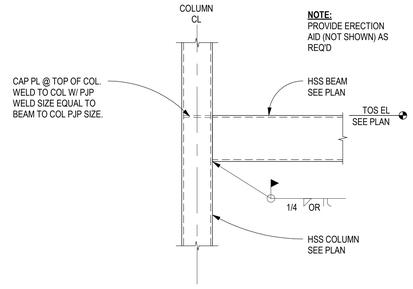

E3 HSS BEAM TO HSS COLUMN
SCALE: 3/4" = 1'-0"

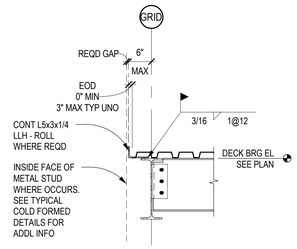

E2 TYPICAL DECK EDGE AT GIRDER
SCALE: 3/4" = 1'-0"

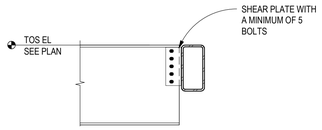

D3 BEAM TO BEAM CONN
SCALE: 3/4" = 1'-0"

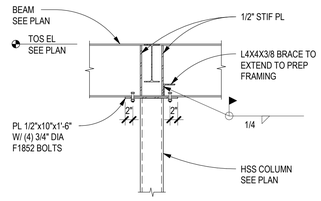

D2 BEAM OVER HSS COLUMN CONN
SCALE: 3/4" = 1'-0"

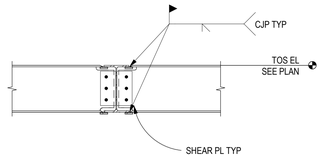

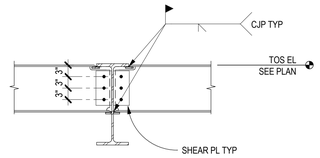

C3 BEAM TO GIRDER - FIXED
SCALE: 3/4" = 1'-0"

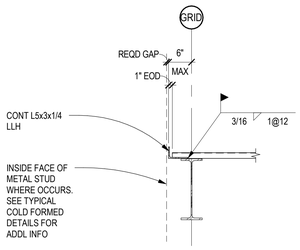

TYPE A

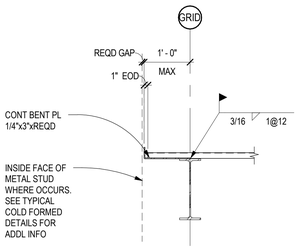

TYPE B

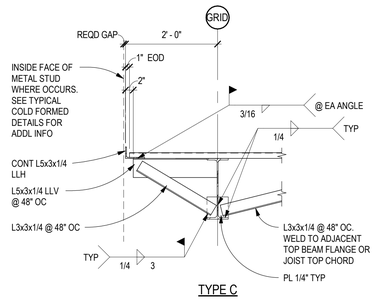

TYPE C

B4 TYPICAL ROOF DECK EDGE AT NON-BEARING BEAM
SCALE: 3/4" = 1'-0"

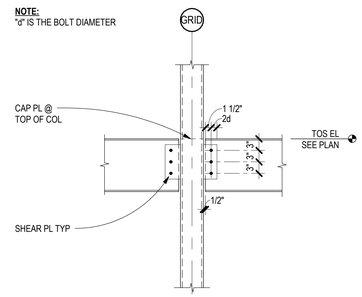

A6 BM TO HSS COL - SIMPLE
SCALE: 3/4" = 1'-0"

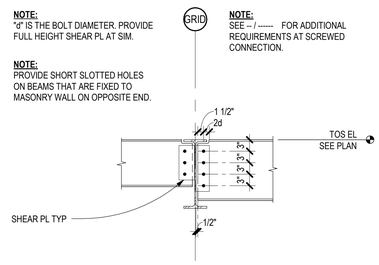

A5 BEAM TO GIRDER CONN - SIMPLE
SCALE: 3/4" = 1'-0"

1. ALL BOLTS SHALL BE A325N 3/4" DIA IN STANDARD HOLES UNLESS NOTED OTHERWISE.
2. ALL SHEAR TABS SHALL BE PL 5/16" WELDED TO THE SUPPORTING MEMBER WITH 1/4" FILLET WELDS ON BOTH SIDES UNLESS NOTED OTHERWISE.
3. BOLT QUANTITIES FOR EACH CONNECTOIN SHALL BE AS FOLLOWS UNLESS NOTED OTHERWISE:
   - 2 @ W8,W10
   - 3 @ W12,W14
   - 4 @ W16
   - 5 @ W18,W21
   - 6 @ W24
   - 7 @ W27
   - 8 @ W30
   - 9 @ W33
   - 10 @W36
   - 11 @ W40
   - 12@ W44
4. PROVIDE 1/4" CAP PL AT TOP OF ALL HSS/PIPE COLUMNS AND 1/2" CAP PL @ TOP OF ALL WF COLUMNS UNO.
5. PROVIDE 1/4" END PLATE AT ALL EXPOSED HSS MEMBERS UNO.
6. DIMENSIONS SHOWN FOR SIMPLE CONNECTIONS APPLY TO SIMILAR CONNECTIONS UNO.

A2 STANDARD STEEL CONNECTIONS
SCALE: 3/4" = 1'-0"

Chavez-Grieves consulting engineers, inc.
4700 Lincoln Road NE, Suite 103 • Albuquerque, NM 87109
505-344-4080 • 505-343-8755 fax

STAMP

BENJAMIN L. BURKHARD
NEW MEXICO
26142
PROFESSIONAL ENGINEER
11/03/2023
EXP: 12/31/2024

DYRON MURPHY ARCHITECTS, P.C.
4505 Montbel Place NE, Albuquerque, New Mexico 87107

SHIPROCK PINNACLE HOTEL & RESTAURANT

SHIPROCK, NEW MEXICO

100% CONSTRUCTION DOCUMENTS

ISSUED FOR CONSTRUCTION

NOVEMBER 03, 2023

PROJECT NUMBER	DRAWN BY	PROJ MGR
2022.10	ML / THF	BB/MG

TYPICAL STEEL CONNECTION DETAILS

Sheet Title

Sheet Number

of

S-731

11/3/2023 6:59:31 PM C:\Revit Projects\M07-168 Shiprock Pinnacle_Hotel_STRUCT_R\ryan.rvt
DYRON MURPHY ARCHITECTS, P.C.

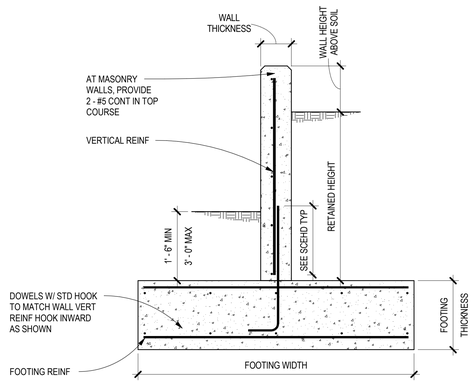

RETAINED HEIGHT	WALL MATERIAL	MAX WALL HEIGHT ABOVE SOIL	WALL THICKNESS	VERTICAL REINFORCING	HORIZONTAL REINFORCEMENT	FOOTING WIDTH	FOOTING THICKNESS	FOOTING REINFORCING
UP TO 3' - 0"	MASONRY	6' - 0"	0' - 8"	#4 @ 16" OC	2 - #5 @ 24" OC	3' - 6"	1' - 6"	4 - #4 CONT TOP & BOT & #4 @ 18" OC TRANS TOP & BOT
UP TO 3' - 0"	CONCRETE	6' - 0"	0' - 8"	#5 @ 12" OC	#4 @ 12" OC	3' - 6"	1' - 6"	4 - #4 CONT TOP & BOT & #4 @ 18" OC TRANS TOP & BOT

D2 SITE WALL DETAIL
SCALE: 3/4" = 1'-0"

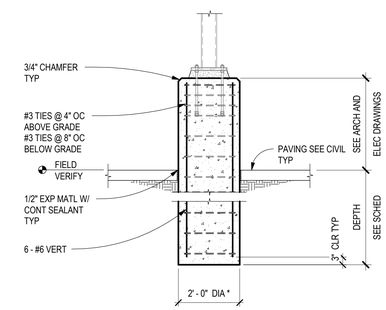

*NOTE:
COORDINATE DIAMETER OF BASE WITH ARCH AND ELECTRICAL. PROVIDE 30" BASE WHERE REQUIRED.

POLE HEIGHT	DEPTH
0' - 0" - 15' - 0"	4' - 0"
>15' - 0" - 25' - 0"	5' - 0"
> 25' - 0" - 35' - 0"	6' - 6"
> 35' - 0" - 40' - 0"	8' - 0"

B2 LIGHT POLE BASE SECTION
SCALE: 1/2" = 1'-0"

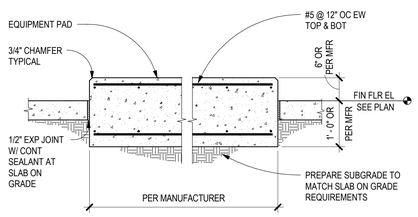

A3 ISOLATED EQUIPMENT PAD
SCALE: 3/4" = 1'-0"

NOTES:
SEE ARCH FOR TRASH ENCLOSURE LOCATIONS.

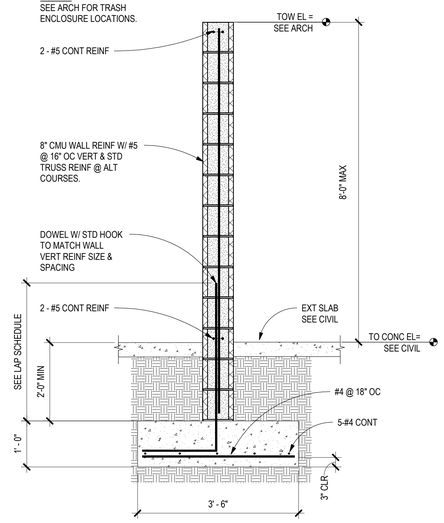

A2 TRASH ENCLOSURE SECTION
SCALE: 3/4" = 1'-0"

Chavez-Grieves consulting engineers, inc.
4700 Lincoln Road NE, Suite 100 • Albuquerque, NM 87109
505-344-4080 • 505-343-8759 fax

STAMP

BENJAMIN L. BURKHARD
NEW MEXICO
26142
PROFESSIONAL ENGINEER
11/03/2023
EXP: 12/31/2024

DYRON MURPHY ARCHITECTS, P.C.
4505 Montbel Place NE, Albuquerque, New Mexico 87107

SHIPROCK PINNACLE HOTEL & RESTAURANT
SHIPROCK, NEW MEXICO
100% CONSTRUCTION DOCUMENTS
ISSUED FOR CONSTRUCTION
NOVEMBER 03, 2023

PROJECT NUMBER	DRAWN BY	PROJ MGR
2022.10	ML/THF	BB/MG

TYPICAL SITE DETAILS

Sheet Title

Sheet Number of

S-741

11/3/2023 6:59:32 PM C:\Revit Projects\M07-198 Shiprock Pinnacle_Hotel_STRUCT_Bnguas.rvt
DYRON MURPHY ARCHITECTS, P.C.

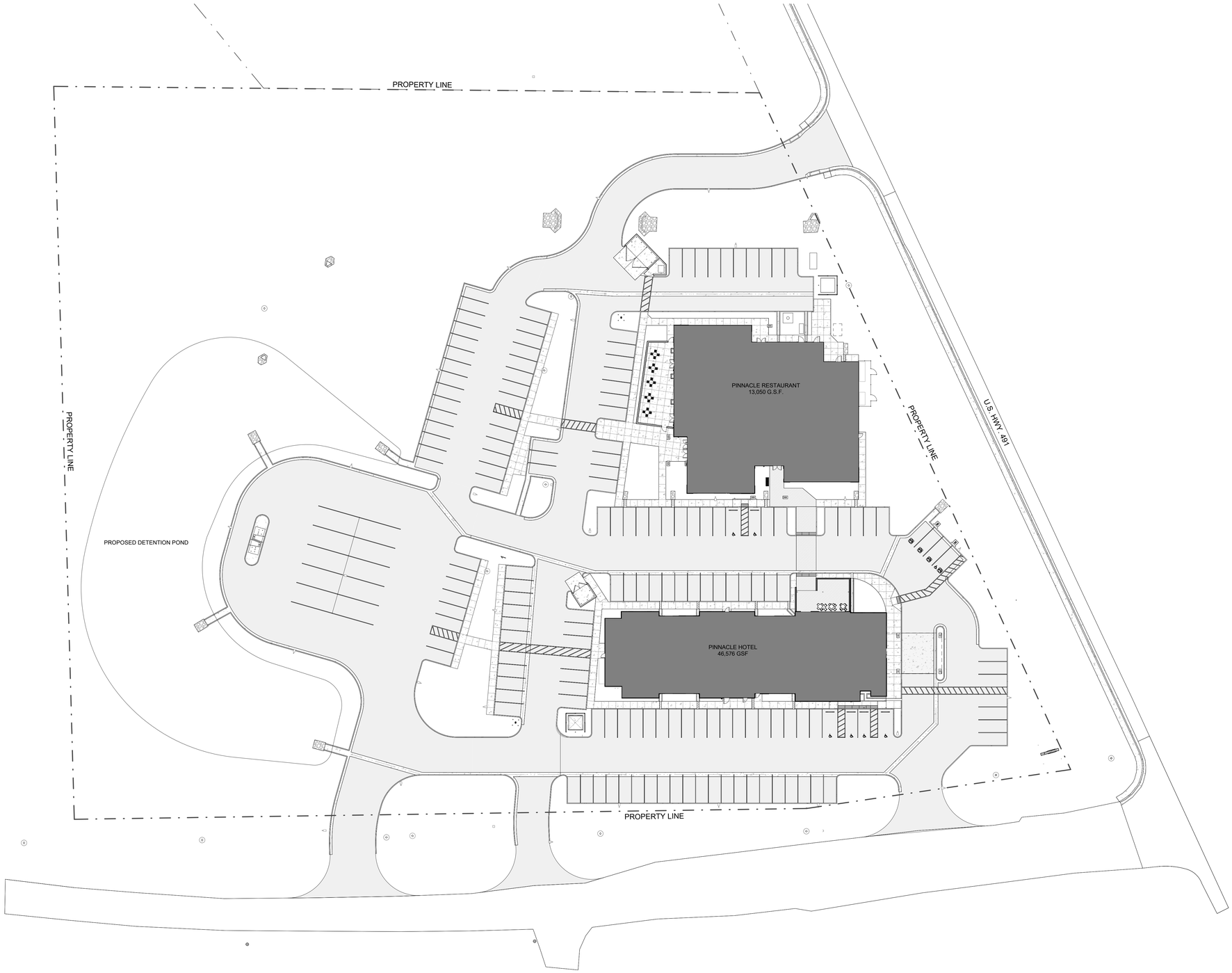

A6 **SITE PLAN**
1" = 30'-0"

STAMP

STATE OF NEW MEXICO
DYRON V. MURPHY
No. 3713
11/3/2023
REGISTERED ARCHITECT

DYRON MURPHY ARCHITECTS, P.C.

4505 Montbel Place NE, Albuquerque, New Mexico 87107

SHIPROCK PINNACLE HOTEL & RESTAURANT

SHIPROCK, NEW MEXICO

100% CONSTRUCTION DOCUMENTS

ISSUED FOR CONSTRUCTION

NOVEMBER 3, 2023

PROJECT NUMBER	DRAWN BY	PROJ MGR
2022.10	DF	DM

OVERALL SITE PLAN

Sheet Title

Sheet Number of

A001

C:\Revit Local\Shiprock Pinnacle_Site_R22_dfeldbusch_dm-architects_com.rvt

11/6/2023 7:46:27 AM

DYRON MURPHY ARCHITECTS, P.C.

A6 **SITE PLAN**
1" = 20'-0"

GENERAL NOTES

A. CONTRACTOR TO FIELD VERIFY EXISTING CONDITIONS AND EXISTING UTILITIES AND IS RESPONSIBLE FOR REMOVALS AS REQUIRED TO COMPLETE THE WORK. CONTRACTOR SHALL NOTIFY ARCHITECT IMMEDIATELY OF ANY DISCREPANCIES.
B. CONTRACTOR TO PROMOTE SAFETY MEASURES TO PROTECT PEDESTRIANS, VEHICLES AND ALL EXISTING CONSTRUCTION TO REMAIN.
C. CONTRACTOR TO COORDINATE WITH THE OWNER FOR ALLOWABLE STAGING AREAS DURING CONSTRUCTION.
D. FIELD VERIFY ALL EXISTING UTILITIES AND COORDINATE WITH THE SCOPE OF WORK SHOWN ON DRAWINGS.
E. "REMOVE" IN ALL NOTES MEANS TO REMOVE THE EXISTING ITEM AND ALL ASSOCIATED COMPONENTS, AND PROPERLY DISPOSE OF OFF SITE.
F. ALL DIMENSIONS ARE TO FACE OF CURB UNLESS OTHERWISE NOTED.
G. ALL DIMENSIONS SHOWN FROM/TO BUILDINGS ARE TO EXTERIOR FACE OF BUILDING FOUNDATION/EXTERIOR FACE OF WALL STUD, NOT INCLUDING EXTERIOR FINISHES OR EXTERIOR INSULATION.
H. ALL SIDEWALKS ARE 5'-0" WIDE FROM EDGE TO EDGE UNLESS OTHERWISE NOTED.
I. SEE SHEET A003 AND A004 FOR SITE DETAILS.
J. COORDINATE LOCATION OF TRASH AND RECYCLING BINS WITH ARCHITECT.
K. REFER TO CIVIL DRAWINGS FOR ADDITIONAL SITE INFORMATION
L. REFER TO LANDSCAPE DRAWINGS FOR PLANTING AND IRRIGATION PLANS.

KEYED NOTES

03 3000.A1	CONCRETE SLAB
04 2000.A4	8X8X16 CMU
26 2653.B1	ELECTRIC VEHICLE CHARGING EQUIPMENT - LEVEL 2
32 1200.B1	ASPHALT PAVING
32 1200.C3	CROSSWALK PAVEMENT MARKING
32 1300.A1	CONCRETE SIDEWALK
32 1300.B1	CONTROL JOINT
32 1300.E1	CONCRETE CURB AND GUTTER
32 1300.E2	CONCRETE CURB
32 1300.E3	CONCRETE GUTTER
32 3119.A2	DECORATIVE METAL GATE
32 3119.B1	DECORATIVE METAL PRIVACY FENCE
32 3119.B2	DECORATIVE METAL PRIVACY FENCE GATE
32 3300.A1	SITE BENCH WITH BACK

STAMP

STATE OF NEW MEXICO
DYRON V. MURPHY
No. 3713
11/3/2023
REGISTERED ARCHITECT

DYRON MURPHY ARCHITECTS, P.C.
4505 Montbel Place NE, Albuquerque, New Mexico 87107

SHIPROCK PINNACLE HOTEL & RESTAURANT

SHIPROCK, NEW MEXICO

100% CONSTRUCTION DOCUMENTS

ISSUED FOR CONSTRUCTION

NOVEMBER 3, 2023

PROJECT NUMBER	DRAWN BY	PROJ MGR
2022.10	DF	DM

SITE PLAN

Sheet Title

Sheet Number of

A002

11/6/2023 7:27:01 AM C:\Revit Local\Shiprock Pinnacle_Site_R22_dmelbourne_dm-architects_com.rvt
DYRON MURPHY ARCHITECTS, P.C.

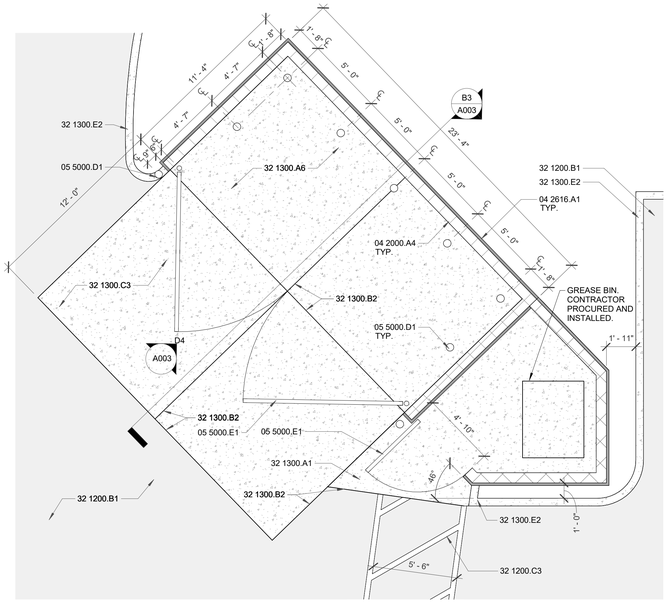

C6 **LARGE SCALE PALN - DUMPSTER ENCLOSURE**
1/4" = 1'-0"

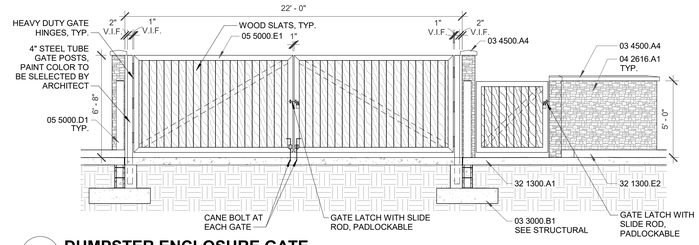

D4 **DUMPSTER ENCLOSURE GATE**
1/4" = 1'-0"

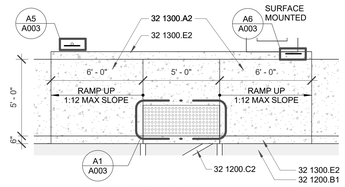

E1 **LARGE SCALE PLAN - ACCESSIBLE SIDEWALK RAMP**
1/4" = 1'-0"

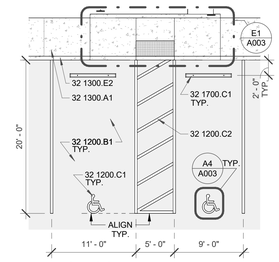

D1 **LARGE SCALE PLAN - REST. ACCESSIBLE PARKING**
1/8" = 1'-0"

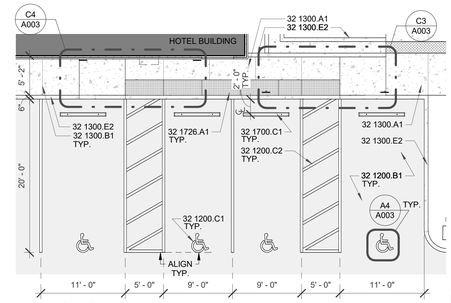

C2 **LARGE SCALE PLAN - HOTEL ACCESSIBLE PARKING**
1/8" = 1'-0"

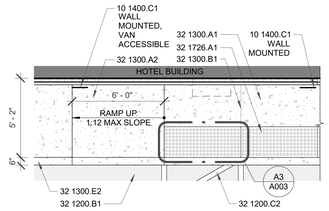

C4 **LARGE SCALE PLAN - ACCESSIBLE SIDEWALK RAMP**
1/4" = 1'-0"

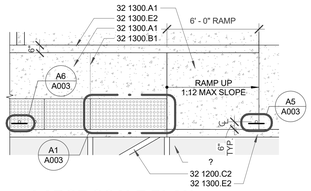

C3 **LARGE SCALE PLAN - ACCESSIBLE SIDEWALK RAMP**
1/4" = 1'-0"

KEYED NOTES

03 3000.B1	CONCRETE FOOTING
03 4500.A4	PRE-CAST CONCRETE CAP
04 2000.A4	8X8X16 CMU
04 2616.A1	ADHERED MASONRY VENEER
04 2616.B1	MORTAR SETTING BED
04 2616.C1	METAL LATH
05 5000.C1	PIPE SLEEVE
05 5000.C2	STEEL TUBE
05 5000.D1	CONCRETE FILLED STEEL PIPE BOLLARD
05 5000.E1	STEEL TUBE GATE
07 9005.A2	SEALANT, CONTINUOUS
10 1400.C1	ACCESSIBLE PARKING SIGN
32 1200.B1	ASPHALT PAVING
32 1200.C1	ACCESSIBLE PARKING PAVEMENT MARKING
32 1200.C2	ACCESSIBLE AISLE PAVEMENT MARKING
32 1200.C3	CROSSWALK PAVEMENT MARKING
32 1300.A1	CONCRETE SIDEWALK
32 1300.A2	SIDEWALK RAMP
32 1300.A6	CONCRETE PAVING
32 1300.B1	CONTROL JOINT
32 1300.B2	1/2" EXPANSION JOINT
32 1300.C3	CONCRETE DRIVE APRON
32 1300.E2	CONCRETE CURB
32 1700.C1	PARKING BUMPER
32 1726.A1	TACTILE WARNING TILE

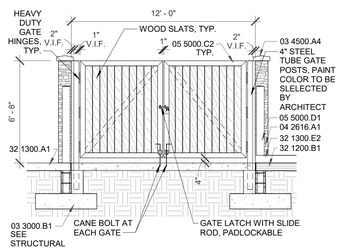

B6 **DUMPSTER ENCLOSURE GATE**
1/4" = 1'-0"

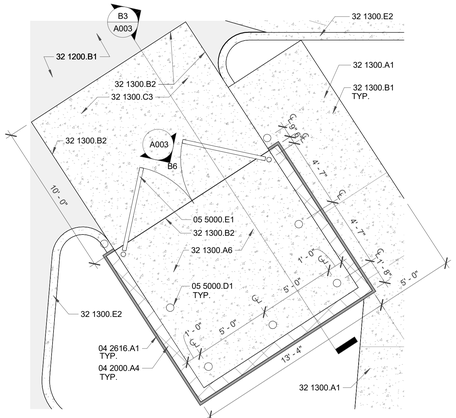

B5 **LARGE SCALE PALN - DUMPSTER ENCLOSURE**
1/4" = 1'-0"

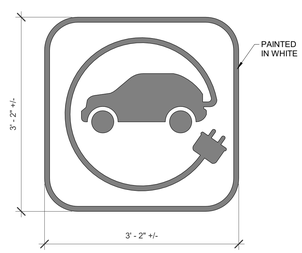

B4 **EV PARKING PAVEMENT SYMBOL**
1" = 1'-0"

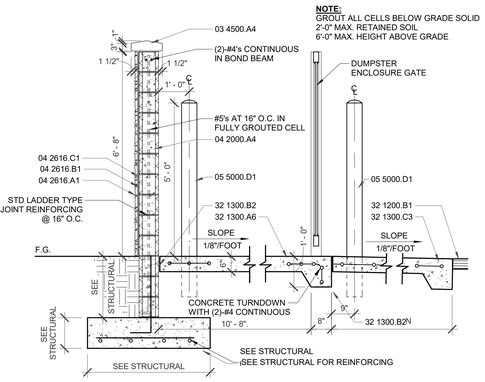

B3 **DUMPSTER ENCLOSURE**
1/2" = 1'-0"

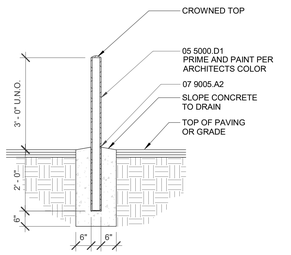

B1 **BOLLARD**
1/2" = 1'-0"

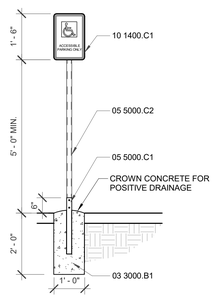

A6 **ACCESSIBLE PARKING SIGN**
1/2" = 1'-0"

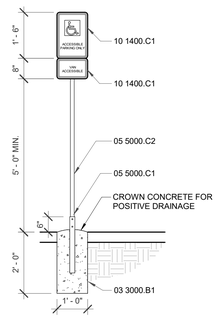

A5 **ACCESSIBLE PARKING SIGN - VAN**
1/2" = 1'-0"

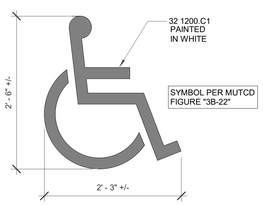

A4 **ACCESSIBLE PAVING PARKING**
1" = 1'-0"

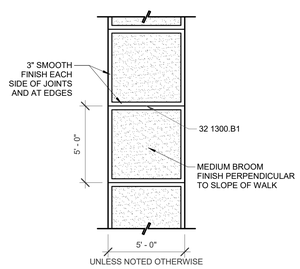

A3 **SIDEWALK DETAIL - PLAN VIEW**
1/4" = 1'-0"

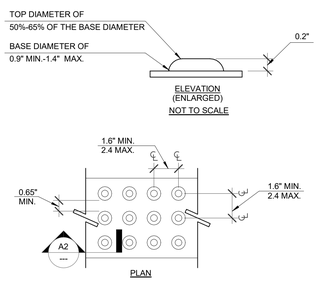

A2 **TRUNCATED DOMES (TYPICAL)**
3" = 1'-0"

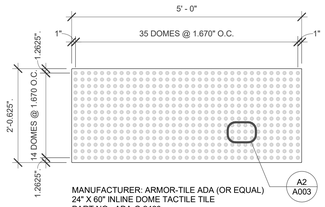

A1 **DETECTABLE TACTILE**
3/4" = 1'-0"

STAMP

STATE OF NEW MEXICO
DYRON V. MURPHY
No. 3713
11/3/2023
REGISTERED ARCHITECT

DYRON MURPHY ARCHITECTS, P.C.

4505 Montbel Place NE, Albuquerque, New Mexico 87107

SHIPROCK PINNACLE HOTEL & RESTAURANT

SHIPROCK, NEW MEXICO

100% CONSTRUCTION DOCUMENTS

ISSUED FOR CONSTRUCTION

NOVEMBER 3, 2023

PROJECT NUMBER	DRAWN BY	PROJ MGR
2022.10	DF	DM

SITE DETAILS

Sheet Title

Sheet Number of

A003

C:\Revit Local\Shiprock Pinnacle_Site_R23_dwilbourn_dm-architects_com.rvt
11/6/2023 7:47:20 AM
DYRON MURPHY ARCHITECTS, P.C.

KEYED NOTES

03 4500.A4	PRE-CAST CONCRETE CAP
04 2000.A4	8X8X16 CMU
04 2616.A1	ADHERED MASONRY VENEER
04 2616.B1	MORTAR SETTING BED
04 2616.C1	METAL LATH
05 5000.C2	STEEL TUBE
05 5000.D1	CONCRETE FILLED STEEL PIPE BOLLARD
08 1113.A2	HOLLOW METAL FRAME
26 2653.B1	ELECTRIC VEHICLE CHARGING EQUIPMENT - LEVEL 2
32 1200.B1	ASPHALT PAVING
32 1200.C2	ACCESSIBLE AISLE PAVEMENT MARKING
32 1200.C3	CROSSWALK PAVEMENT MARKING
32 1200.C4	ELECTRIC VEHICLE CHARGING PAVEMENT MARKING
32 1300.A1	CONCRETE SIDEWALK
32 1300.A2	SIDEWALK RAMP
32 1300.A3	CONCRETE SLAB
32 1300.B1	CONTROL JOINT
32 1300.E1	CONCRETE CURB AND GUTTER
32 1300.E2	CONCRETE CURB
32 1726.A1	TACTILE WARNING TILE
32 3119.A2	DECORATIVE METAL GATE

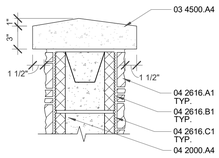

B5 **PRECAST CONCRETE CAP**
1 1/2" = 1'-0"

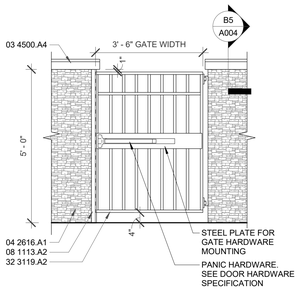

B4 **STEEL GATE - G1 & G2**
1/2" = 1'-0"

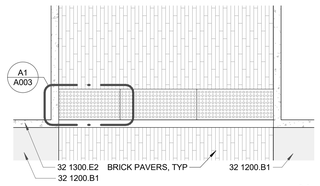

B3 **WALKWAY TRANSITION**
1/4" = 1'-0"

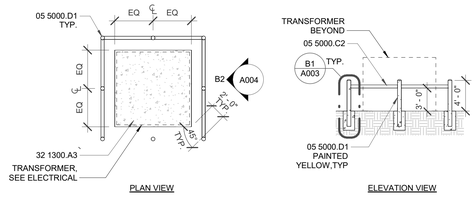

B2 **TRANSFORMER BARRIER DETAIL**
1/8" = 1'-0"

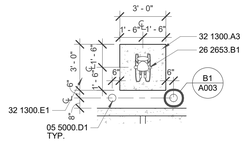

B1 **E.V. CHARGING STATION**
1/4" = 1'-0"

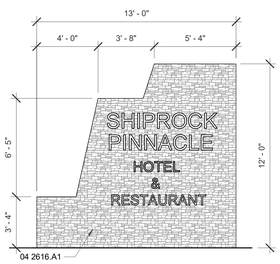

A5 **MONUMENT SIGN**
1/4" = 1'-0"

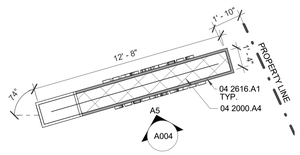

A4 **LARGE SCALE PLAN - MONUMENT SIGN**
1/4" = 1'-0"

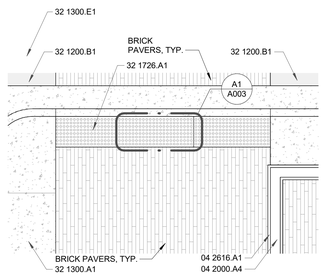

A3 **WALKWAY TRANSITION**
1/4" = 1'-0"

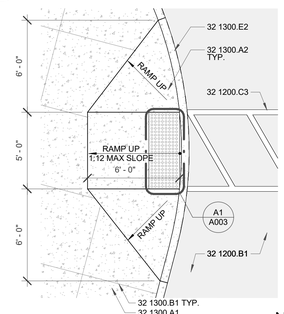

A2 **ACCESSIBLE SIDEWALK RAMP**
1/4" = 1'-0"

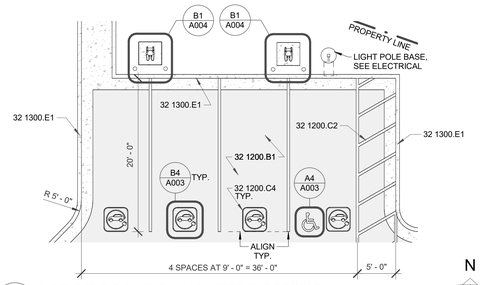

A1 **LARGE SCALE PLAN - E.V. PARKING**
1/8" = 1'-0"

N

STAMP

STATE OF NEW MEXICO
DYRON V. MURPHY
No. 3713
REGISTERED ARCHITECT
11/3/2023

DYRON MURPHY ARCHITECTS, P.C.

4505 Montbel Place NE, Albuquerque, New Mexico 87107

SHIPROCK PINNACLE HOTEL & RESTAURANT

SHIPROCK, NEW MEXICO

100% CONSTRUCTION DOCUMENTS

ISSUED FOR CONSTRUCTION

NOVEMBER 3, 2023

PROJECT NUMBER	DRAWN BY	PROJ MGR
2022.10	DF	DM

SITE DETAILS

Sheet Title

Sheet Number of

A004

11/6/2023 7:47:29 AM C:\Revit Local\Shiprock Pinnacle_Site_022_dbetbuch_dm-architects_cam.rvt
DYRON MURPHY ARCHITECTS, P.C.

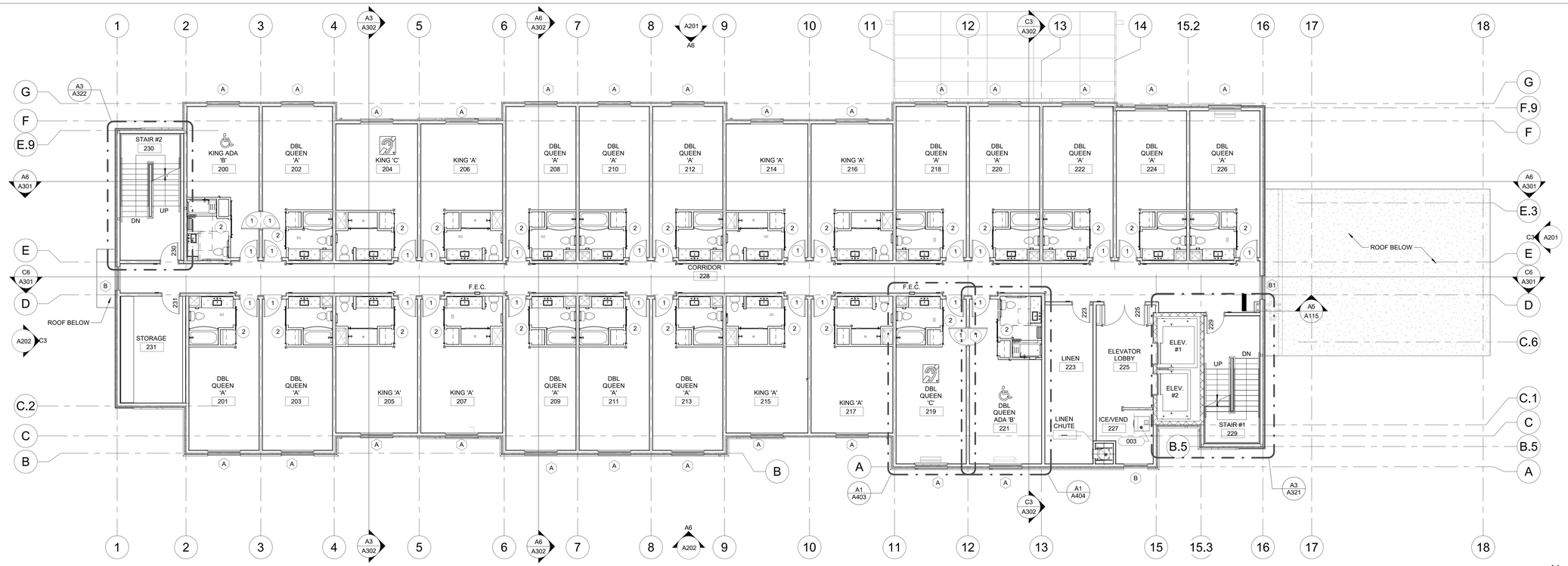

C6 **2ND FLOOR PLAN**
1/8" = 1'-0"

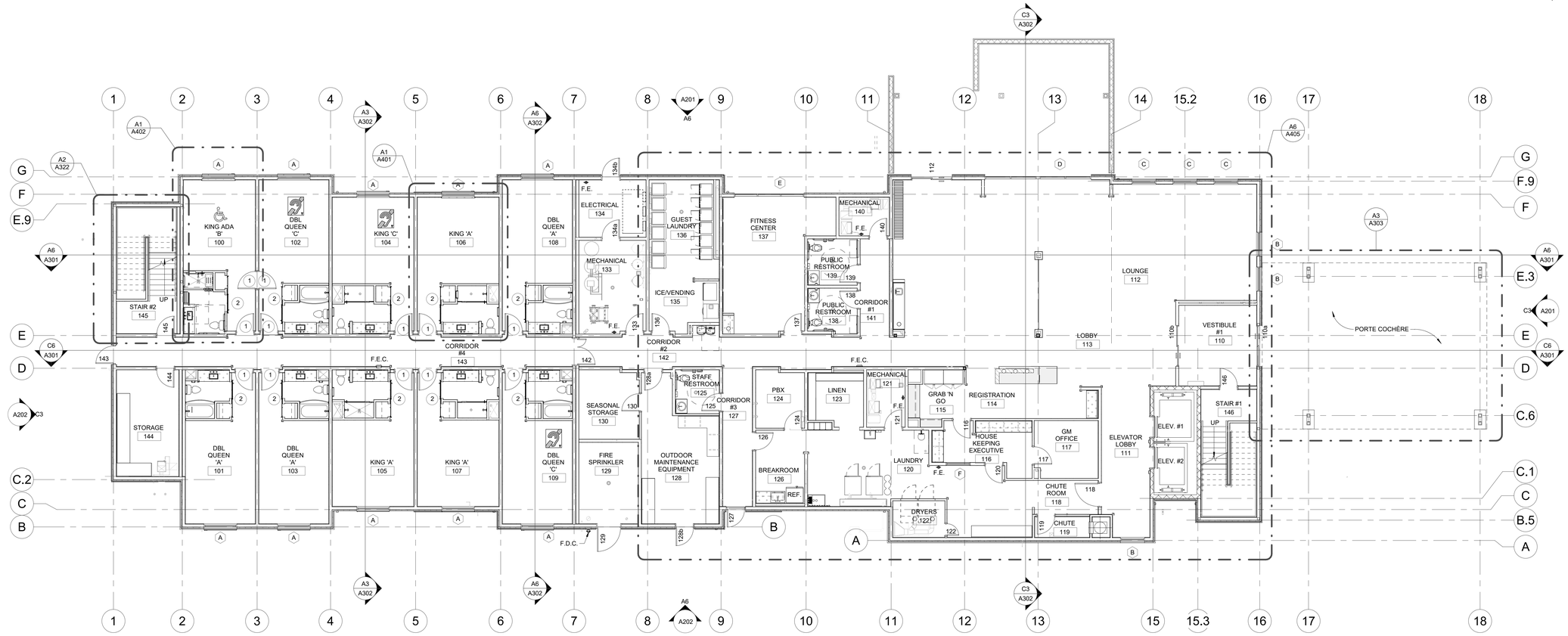

A6 **1ST FLOOR PLAN**
1/8" = 1'-0"

GENERAL NOTES

A. SEE DIMENSION PLAN FOR WALL TYPES.
B. PROVIDE BLINDS AT ALL INTERIOR AND EXTERIOR WINDOWS.
C. REFER TO SHEET G102 AND G103 FOR LOCATION OF FIRE EXTINGUISHERS AND FIRE EXTINGUISHER CABINETS.
D. REFER TO ELEVATIONS FOR ALL WINDOW LOCATIONS AND WINDOWS NOT SHOWN ON PLAN.
E. CONTRACTOR SHALL COORDINATE ALL ROOF DRAIN PIPING WITH FURR-OUTS DIMENSIONS AS SHOWN ON PLANS.
F. CONTRACTOR SHALL COORDINATE WITH STRUCTURAL AND PLUMBING DRAWINGS FOR EXACT FLOOR DRAIN AND FLOOR SINK LOCATIONS PRIOR TO POURING FLOOR SLAB. ANY DISCREPANCIES SHALL BE BROUGHT TO THE ATTENTION OF THE ARCHITECT /ENGINEER.
G. CONTRACTOR TO COORDINATE ALL ELECTRICAL FLOOR BOXES WITH ELECTRICAL DRAWINGS.
H. PROVIDE CORNER GUARDS AT ALL STUD WALL OUTSIDE CORNERS. REFER TO MATERIAL FINISH SCHEDULE ON ID601.
I. PROVIDE PLYWOOD BACKINGS AT ALL LOCATIONS AS REQUIRED, INCLUDING BUT NOT LIMITED TO DOOR WALL STOPS (COORDINATE WITH DOOR HARDWARE).
J. REFER TO SHEET G501 FOR TYPICAL MOUNTING DIMENSIONS FOR PLUMBING FIXTURES.

STAMP

STATE OF NEW MEXICO
DYRON V. MURPHY
No. 3713
11/3/2023
REGISTERED ARCHITECT

DYRON MURPHY ARCHITECTS, P.C.
4505 Montbel Place NE, Albuquerque, New Mexico 87107

SHIPROCK PINNACLE HOTEL & RESTAURANT

SHIPROCK, NEW MEXICO

100% CONSTRUCTION DOCUMENTS

ISSUED FOR CONSTRUCTION

NOVEMBER 3, 2023

PROJECT NUMBER	DRAWN BY	PROJ MGR
2022.10	Author	Designer

FLOOR PLANS - HOTEL - 1ST & 2ND FLOOR

Sheet Title

Sheet Number of

A101

11/6/2023 7:53:08 AM C:\Revit Local\Shiprock Pinnacle_Hotel_dfeldbusch_dm-architects_com.rvt
DYRON MURPHY ARCHITECTS, P.C.

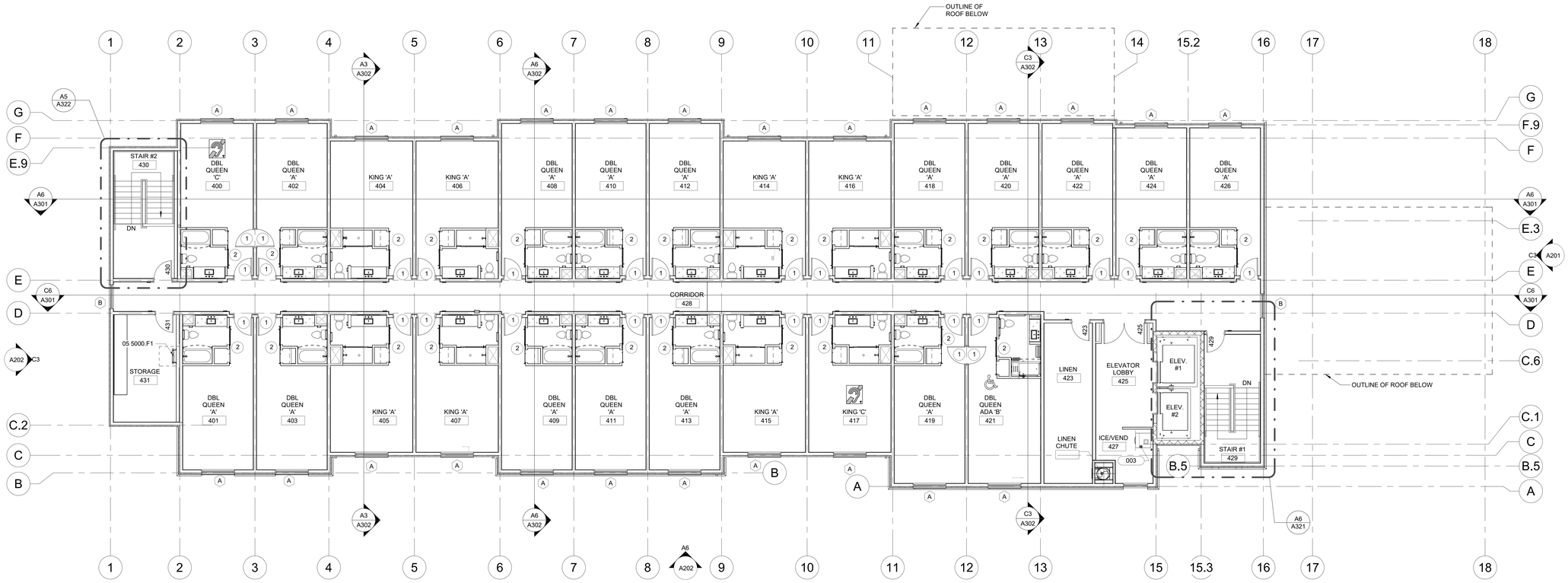

C6 **4TH FLOOR PLAN**
1/8" = 1'-0"

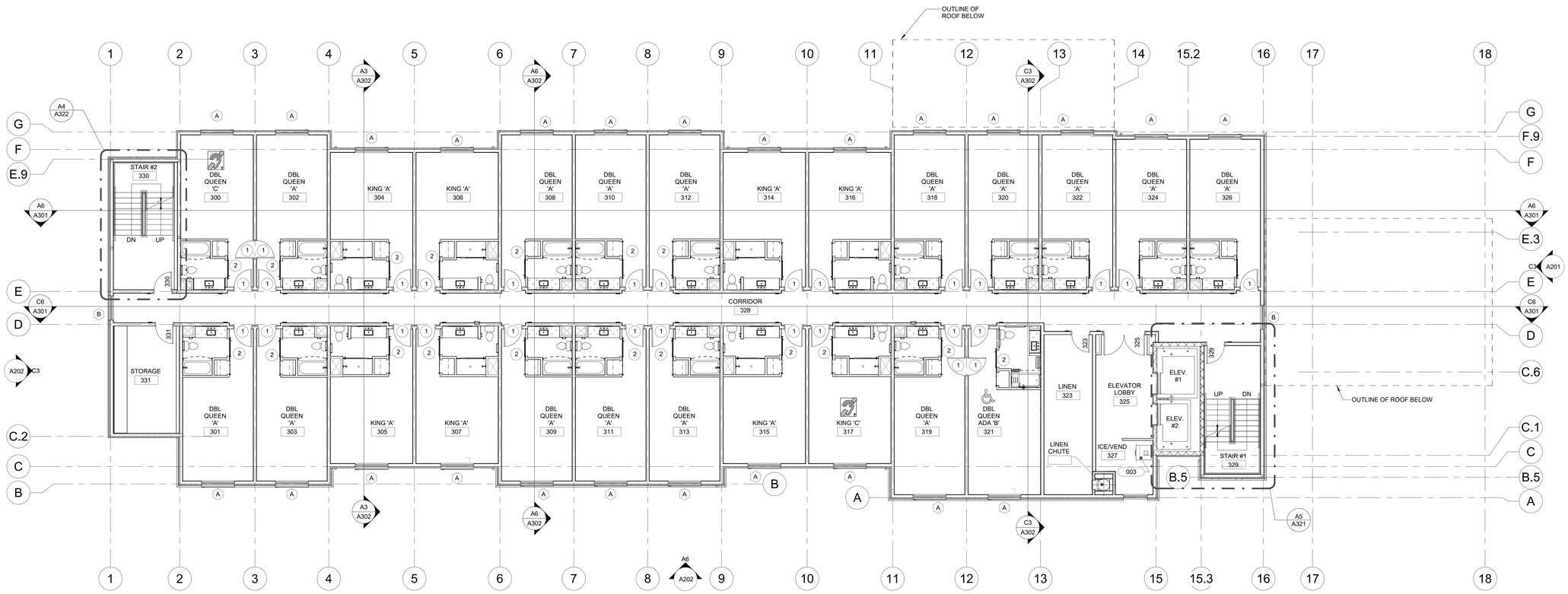

A6 **3RD FLOOR PLAN**
1/8" = 1'-0"

GENERAL NOTES

A. SEE DIMENSION PLAN FOR WALL TYPES.
B. PROVIDE BLINDS AT ALL INTERIOR AND EXTERIOR WINDOWS.
C. REFER TO SHEET G102 AND G103 FOR LOCATION OF FIRE EXTINGUISHERS AND FIRE EXTINGUISHER CABINETS.
D. REFER TO ELEVATIONS FOR ALL WINDOW LOCATIONS AND WINDOWS NOT SHOWN ON PLAN.
E. CONTRACTOR SHALL COORDINATE ALL ROOF DRAIN PIPING WITH FURR-OUTS DIMENSIONS AS SHOWN ON PLANS.
F. CONTRACTOR SHALL COORDINATE WITH STRUCTURAL AND PLUMBING DRAWINGS FOR EXACT FLOOR DRAIN AND FLOOR SINK LOCATIONS PRIOR TO POURING FLOOR SLAB. ANY DISCREPANCIES SHALL BE BROUGHT TO THE ATTENTION OF THE ARCHITECT /ENGINEER.
G. CONTRACTOR TO COORDINATE ALL ELECTRICAL FLOOR BOXES WITH ELECTRICAL DRAWINGS.
H. PROVIDE CORNER GUARDS AT ALL STUD WALL OUTSIDE CORNERS. REFER TO MATERIAL FINISH SCHEDULE ON ID601.
I. PROVIDE PLYWOOD BACKINGS AT ALL LOCATIONS AS REQUIRED, INCLUDING BUT NOT LIMITED TO DOOR WALL STOPS (COORDINATE WITH DOOR HARDWARE).
J. REFER TO SHEET G501 FOR TYPICAL MOUNTING DIMENSIONS FOR PLUMBING FIXTURES.

KEYED NOTES

05 5000.F1 METAL ACCESS LADDER

STAMP

DYRON MURPHY ARCHITECTS, P.C.
4505 Montbel Place NE, Albuquerque, New Mexico 87107

SHIPROCK PINNACLE HOTEL & RESTAURANT

SHIPROCK, NEW MEXICO

100% CONSTRUCTION DOCUMENTS

ISSUED FOR CONSTRUCTION

NOVEMBER 3, 2023

PROJECT NUMBER	DRAWN BY	PROJ MGR
2022.10	Author	Designer

FLOOR PLANS - HOTEL - 3RD & 4TH FLOOR

Sheet Title

Sheet Number of

A102

11/6/2023 7:53:31 AM C:\Revit Local\Shiprock Pinnacle_Hotel_dfeldbusch_dm-architects_com.rvt
DYRON MURPHY ARCHITECTS, P.C.

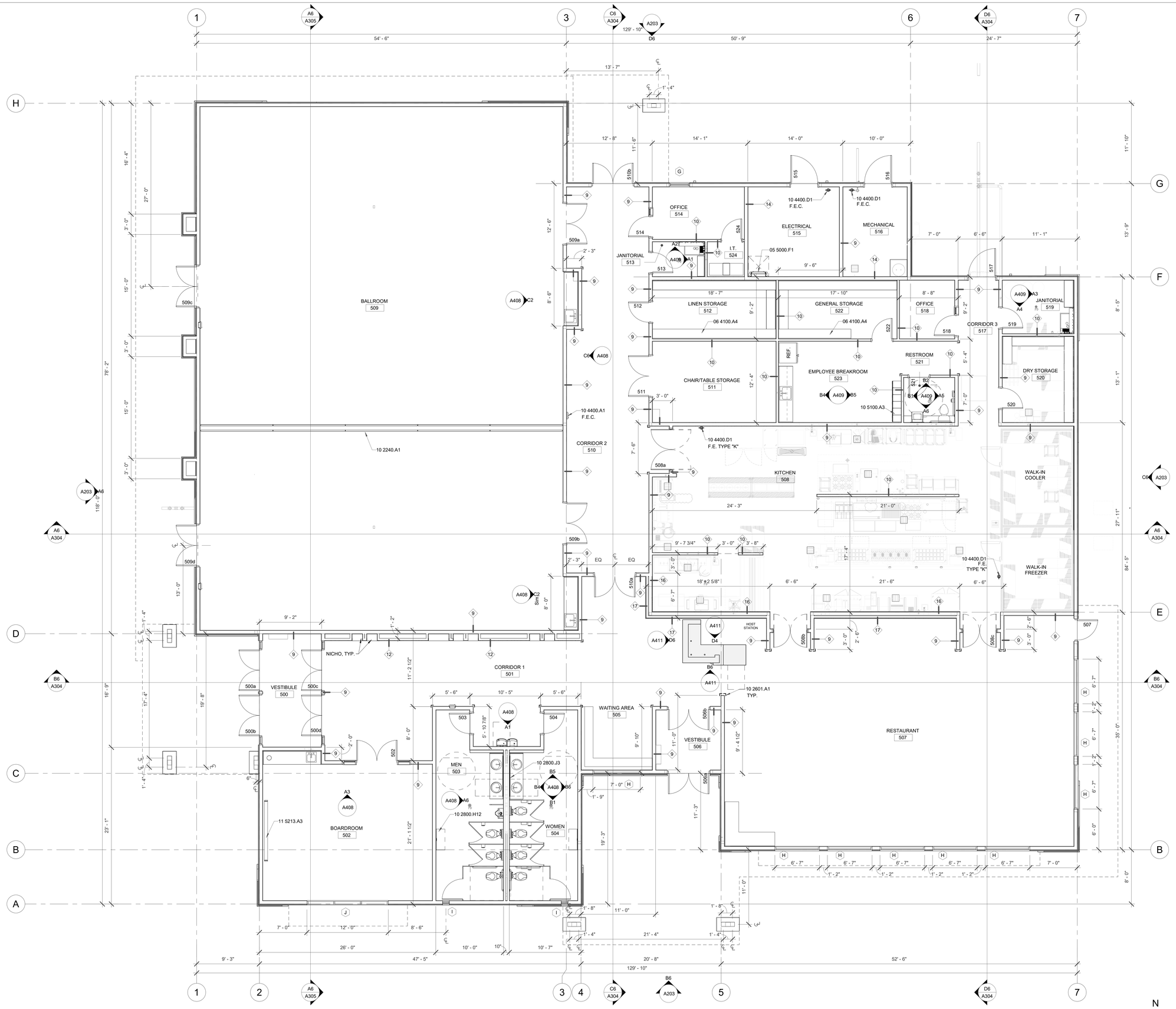

A6 **FLOOR PLAN**
3/16" = 1'-0"
12,100 GSF

GENERAL NOTES

A. SEE DIMENSION PLAN FOR WALL TYPES.
B. PROVIDE BLINDS AT ALL INTERIOR AND EXTERIOR WINDOWS.
C. REFER TO SHEET G101 FOR LOCATION OF FIRE EXTINGUISHERS AND FIRE EXTINGUISHER CABINETS.
D. REFER TO ELEVATIONS FOR ALL WINDOW LOCATIONS AND WINDOWS NOT SHOWN ON PLAN.
E. CONTRACTOR SHALL COORDINATE ALL ROOF DRAIN PIPING WITH FURR-OUTS DIMENSIONS AS SHOWN ON PLANS.
F. CONTRACTOR SHALL COORDINATE WITH STRUCTURAL AND PLUMBING DRAWINGS FOR EXACT FLOOR DRAIN AND FLOOR SINK LOCATIONS PRIOR TO POURING FLOOR SLAB. ANY DISCREPANCIES SHALL BE BROUGHT TO THE ATTENTION OF THE ARCHITECT /ENGINEER.
G. CONTRACTOR TO COORDINATE ALL ELECTRICAL FLOOR BOXES WITH ELECTRICAL DRAWINGS.
H. PROVIDE CORNER GUARDS AT ALL STUD WALL OUTSIDE CORNERS. REFER TO MATERIAL FINISH SCHEDULE ON ID602.
I. PROVIDE PLYWOOD BACKINGS AT ALL LOCATIONS AS REQUIRED, INCLUDING BUT NOT LIMITED TO DOOR WALL STOPS (COORDINATE WITH DOOR HARDWARE).
J. REFER TO SHEET A401 FOR TYPICAL MOUNTING DIMENSIONS FOR PLUMBING FIXTURES.

DIMENSION NOTES

A. ALL DIMENSIONS ARE TO FACE OF STUD UNLESS OTHERWISE NOTED.
B. LOCATE DOOR FRAMES ACCORDING TO THE DETAILS INDICATED ON THE DOOR SCHEDULE.
C. REFER TO LARGE SCALE FLOOR PLANS FOR DIMENSIONS NOT SHOWN ON THIS SHEET.
D. REFER TO SHEET A103 FOR PARTITION TYPES.
E. CONTRACTOR SHALL COORDINATE THE PARTITION TYPES INDICATED ON THIS SHEET WITH THE SMOKE RESISTANT AND/OR FIRE-RESISTANCE RATED ASSEMBLIES INDICATED ON THE LIFE SAFETY PLAN. IN THE CASE OF ANY DISCREPANCIES IN SMOKE RESISTANCE OR FIRE RATING, THE MOST RESTRICTIVE SHALL GOVERN.

KEYED NOTES

05 5000.F1	METAL ACCESS LADDER
06 4100.A4	PLASTIC LAMINATE COVERED SHELVES
10 2240.A1	AUTOMATIC VERTICALLY RETRACTABLE ACOUSTICAL WALL
10 2601.A1	CORNER GUARD
10 2800.H12	BABY CHANGING STATION
10 2800.J3	FIXED ANGLE MIRROR
10 4400.A1	FIRE EXTINGUISHER
10 4400.D1	PORTABLE FIRE EXTINGUISHER W/ WALL BRACKET ASSEMBLY
10 5100.A3	SOLID PHENOLIC LOCKERS
11 5213.A3	MOTORIZED PROJECTION SCREEN

STAMP

STATE OF NEW MEXICO
DYRON V. MURPHY
No. 3713
11/3/2023
REGISTERED ARCHITECT

DYRON MURPHY ARCHITECTS, P.C.
4505 Montbel Place NE, Albuquerque, New Mexico 87107

SHIPROCK PINNACLE HOTEL & RESTAURANT

SHIPROCK, NEW MEXICO

100% CONSTRUCTION DOCUMENTS

ISSUED FOR CONSTRUCTION

NOVEMBER 3, 2023

PROJECT NUMBER	DRAWN BY	PROJ MGR
2022.10	Author	Designer

FLOOR & DIMENSION PLAN - RESTAURANT

Sheet Title

Sheet Number A103 of

11/3/2023 4:34:17 PM C:\Revit Local\Shiprock Pinnacle_Restaurant_dkobush_dm-architects_cpm.rvt
DYRON MURPHY ARCHITECTS, P.C.

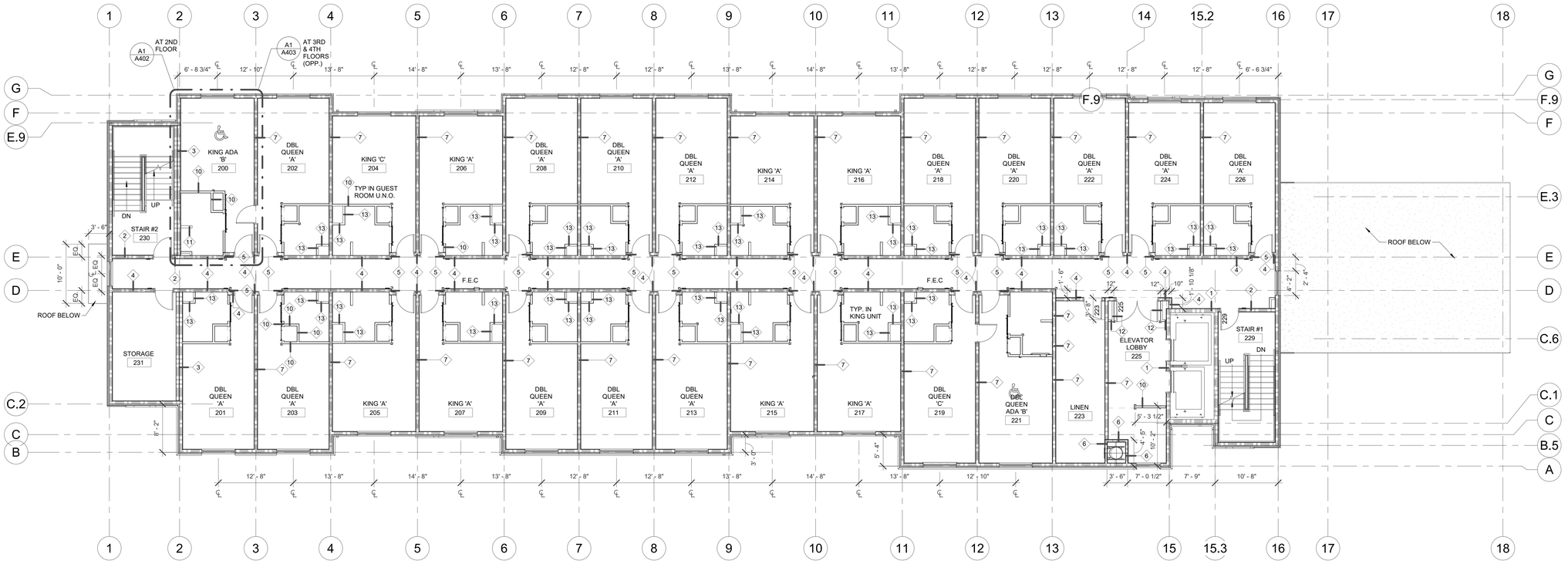

C6 **2ND FLOOR DIMENSION PLAN (3RD & 4TH FLOOR SIM.)**
1/8" = 1'-0"

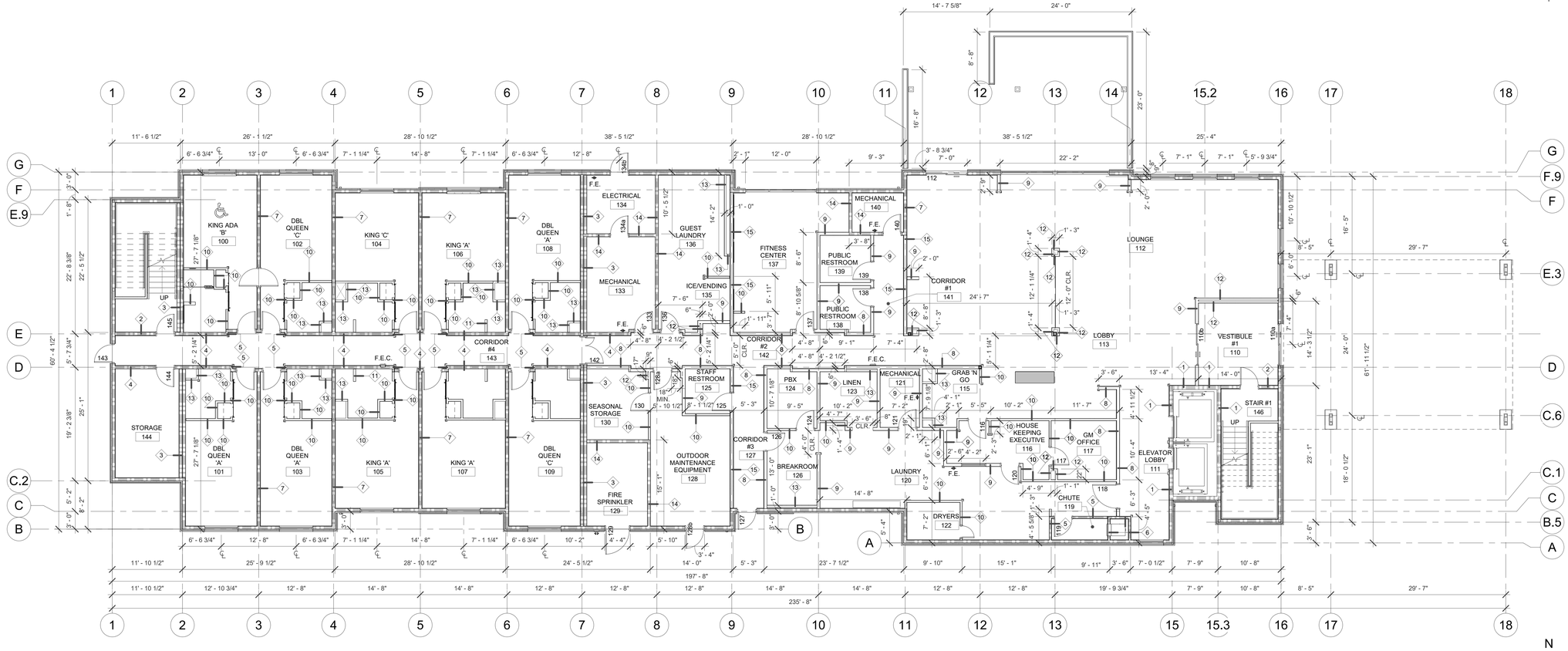

A6 **1ST FLOOR DIMENSION PLAN**
1/8" = 1'-0"

DIMENSION NOTES

A. ALL DIMENSIONS ARE TO FACE OF STUD UNLESS OTHERWISE NOTED.
B. LOCATE DOOR FRAMES ACCORDING TO THE DETAILS INDICATED ON THE DOOR SCHEDULE.
C. REFER TO LARGE SCALE FLOOR PLANS FOR DIMENSIONS NOT SHOWN ON THIS SHEET.
D. REFER TO SHEET A107 FOR PARTITION TYPES.
E. CONTRACTOR SHALL COORDINATE THE PARTITION TYPES INDICATED ON THIS SHEET WITH THE SMOKE RESISTANT AND/OR FIRE-RESISTANCE RATED ASSEMBLIES INDICATED ON THE LIFE SAFETY PLAN. IN THE CASE OF ANY DISCREPANCIES IN SMOKE RESISTANCE OR FIRE RATING, THE MOST RESTRICTIVE SHALL GOVERN.

PARTITION TYPE NOTES

A. FIRE-RESISTANCE RATED WALLS SHALL BE CONSTRUCTED IN ACCORDANCE WITH THE REFERENCED UL DESIGN FOR THE ASSEMBLY, INCLUDING, BUT NOT LIMITED TO: TAPE & JOINT COMPOUND, FASTENERS (INCLUDING NAILS, SCREWS, OR STAPLES) AND GYPSUM BOARD TYPES.
B. ALL JOINTS BETWEEN RATED ASSEMBLIES AND ADJACENT CONSTRUCTION (INCLUDING WALL HEAD AND WALL BASE) SHALL BE CONSTRUCTED IN ACCORDANCE WITH AN APPROPRIATE UL JOINT DESIGN APPLICABLE TO THE RATED ASSEMBLY IN WHICH THEY OCCUR, INCLUDING, BUT NOT LIMITED TO: INTUMESCENT SEALANT, EXPANSION SYSTEMS, CUT DIMENSIONS, AND VOID MATERIALS.
C. PENETRATIONS IN RATED PARTITIONS SHALL BE CONSTRUCTED IN ACCORDANCE WITH AN APPROPRIATE UL PENETRATION DESIGN FOR THE RATED ASSEMBLY IN WHICH THEY OCCUR.
D. ALL MATERIALS USED IN RATED ASSEMBLIES SHALL BEAR THE UL CLASSIFICATION MARK AS REQUIRED BY THE UL DESIGN OF THE ASSEMBLY IN WHICH THEY OCCUR.
E. PROVIDE 5/8" WATER RESISTANT GYP. BOARD AT ALL RESTROOMS, JANITORS CLOSETS, AND AREAS WITH DRINKING FOUNTAINS.
F. PROVIDE 5/8" DENS SHIELD SHEATHING AT LOCATIONS WHERE CERAMIC TILE IS LOCATED.
G. PROVIDE BRACING AT DOOR FRAME LOCATIONS ON STRIKE SIDE AND PROVIDE 0.312" THK. STEEL STUD AT DOOR STRIKE LOCATIONS.
H. ALL PARTITIONS, UNLESS OTHERWISE NOTED, ARE 12" ABOVE CEILING.

WALL TYPES

PARTITION REQUIRING A 2 HOUR FIRE RATING
PARTITION REQUIRING A 1 HOUR FIRE RATING
PARTITION REQUIRING NO FIRE RATING

STAMP

STATE OF NEW MEXICO
DYRON V. MURPHY
No. 3713
11/3/2023
REGISTERED ARCHITECT

DYRON MURPHY ARCHITECTS, P.C.
4505 Montbel Place NE, Albuquerque, New Mexico 87107

SHIPROCK PINNACLE HOTEL & RESTAURANT

SHIPROCK, NEW MEXICO
100% CONSTRUCTION DOCUMENTS
ISSUED FOR CONSTRUCTION
NOVEMBER 3, 2023

PROJECT NUMBER	DRAWN BY	PROJ MGR
2022.10	Author	Designer

DIMENSION PLANS - HOTEL

Sheet Title

Sheet Number

A104

11/6/2023 7:33:52 AM C:\Revit Local\Shiprock Pinnacle_Hotel_dbelbuch_dmarchitects_com.rvt
DYRON MURPHY ARCHITECTS, P.C.

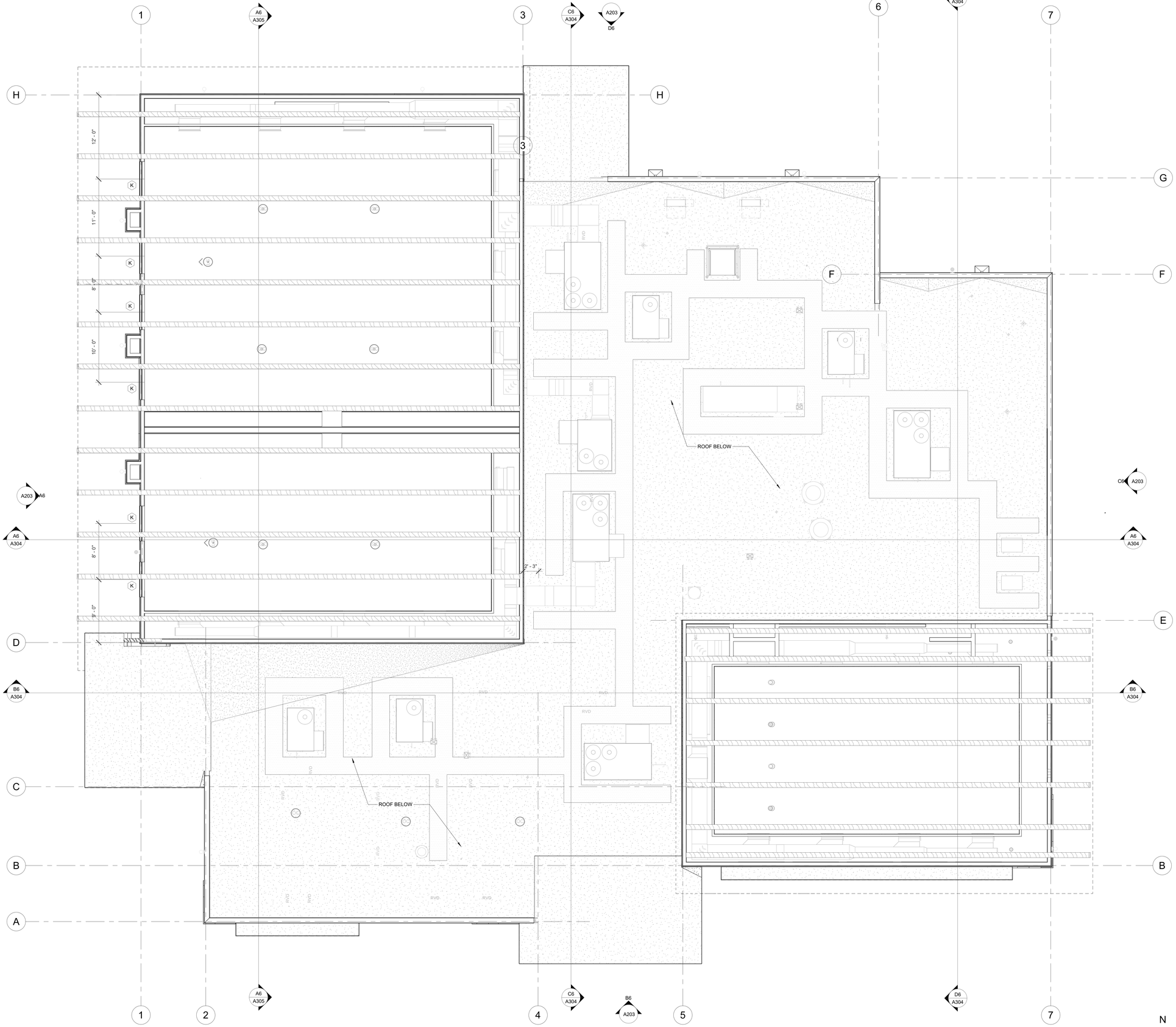

A6 **CLERESTORY DIMENSION PLAN - RESTAURANT**
3/16" = 1'-0"

0 2'-8" 5'-4" 10'-8"

N

GENERAL NOTES

A. SEE DIMENSION PLAN FOR WALL TYPES.
B. PROVIDE BLINDS AT ALL INTERIOR AND EXTERIOR WINDOWS.
C. REFER TO SHEET G101 FOR LOCATION OF FIRE EXTINGUISHERS AND FIRE EXTINGUISHER CABINETS.
D. REFER TO ELEVATIONS FOR ALL WINDOW LOCATIONS AND WINDOWS NOT SHOWN ON PLAN.
E. CONTRACTOR SHALL COORDINATE ALL ROOF DRAIN PIPING WITH FURR-OUTS DIMENSIONS AS SHOWN ON PLANS.
F. CONTRACTOR SHALL COORDINATE WITH STRUCTURAL AND PLUMBING DRAWINGS FOR EXACT FLOOR DRAIN AND FLOOR SINK LOCATIONS PRIOR TO POURING FLOOR SLAB. ANY DISCREPANCIES SHALL BE BROUGHT TO THE ATTENTION OF THE ARCHITECT /ENGINEER.
G. CONTRACTOR TO COORDINATE ALL ELECTRICAL FLOOR BOXES WITH ELECTRICAL DRAWINGS.
H. PROVIDE CORNER GUARDS AT ALL STUD WALL OUTSIDE CORNERS. REFER TO MATERIAL FINISH SCHEDULE ON ID602.
I. PROVIDE PLYWOOD BACKINGS AT ALL LOCATIONS AS REQUIRED, INCLUDING BUT NOT LIMITED TO DOOR WALL STOPS (COORDINATE WITH DOOR HARDWARE).
J. REFER TO SHEET A401 FOR TYPICAL MOUNTING DIMENSIONS FOR PLUMBING FIXTURES.

KEYED NOTES

STAMP

DYRON MURPHY ARCHITECTS, P.C.

4505 Montbel Place NE, Albuquerque, New Mexico 87107

SHIPROCK PINNACLE HOTEL & RESTAURANT

SHIPROCK, NEW MEXICO

100% CONSTRUCTION DOCUMENTS

ISSUED FOR CONSTRUCTION

NOVEMBER 3, 2023

PROJECT NUMBER	DRAWN BY	PROJ MGR
2022.10	Author	Designer

CLERESTORY DIMENSION PLAN - RESTAURANT

Sheet Title

Sheet Number of

A105

11/3/2023 4:50:09 PM C:\Revit Local\Shiprock Pinnacle_Restaurant_dbb8ouch_dm-architects_cons.rvt
DYRON MURPHY ARCHITECTS, P.C.

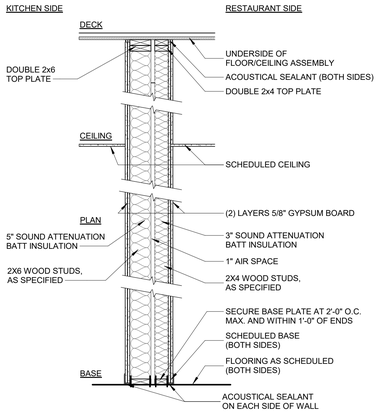

DOUBLE STUD PARTITION, NON-RATED

NOTES:
1. WOOD STUD SIZES: 5 1/2" and 3 1/2"
2. OVERALL DIMENSION = 1' - 0 1/2"
3. NON-RATED
4. STC = 63

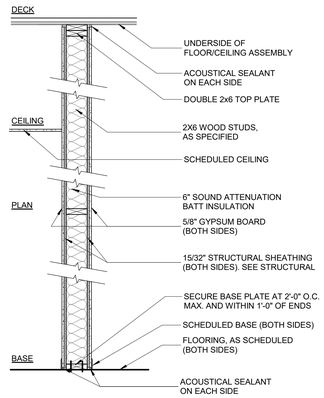

6" PARTITION

NOTES:
1. WOOD STUD SIZE: 5 1/2"
2. OVERALL DIMENSION = 7 3/4"
3. NON-RATED
4. STC = 56

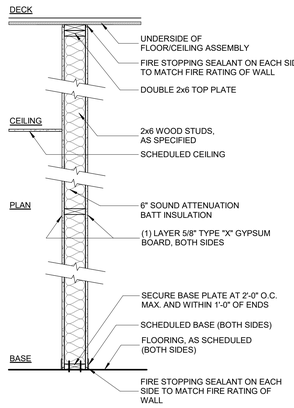

6" PARTITION, 1-HOUR RATED

NOTES:
1. WOOD STUD SIZE: 5 1/2"
2. OVERALL DIMENSION = 6 3/4"
3. 1-HOUR FIRE RATED (UL DESIGN U305)
4. PROVIDE FIRESTOPPING AND SEALANT AT WALL PENETRATIONS, TYPICAL

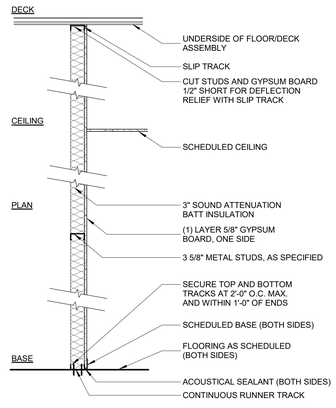

4" PARTITION, NON-RATED

NOTES:
1. METAL STUD SIZE = 3 5/8"
2. OVERALL DIMENSION = 4 1/4"
3. NON-RATED

PARTITION TYPE NOTES

A. FIRE-RESISTANCE RATED WALLS SHALL BE CONSTRUCTED IN ACCORDANCE WITH THE REFERENCED UL DESIGN FOR THE ASSEMBLY, INCLUDING, BUT NOT LIMITED TO: TAPE & JOINT COMPOUND, FASTENERS (INCLUDING NAILS, SCREWS, OR STAPLES) AND GYPSUM BOARD TYPES.
B. ALL JOINTS BETWEEN RATED ASSEMBLIES AND ADJACENT CONSTRUCTION (INCLUDING WALL HEAD AND WALL BASE) SHALL BE CONSTRUCTED IN ACCORDANCE WITH AN APPROPRIATE UL JOINT DESIGN APPLICABLE TO THE RATED ASSEMBLY IN WHICH THEY OCCUR, INCLUDING, BUT NOT LIMITED TO: INTUMESCENT SEALANT, EXPANSION SYSTEMS, CUT DIMENSIONS, AND VOID MATERIALS.
C. PENETRATIONS IN RATED PARTITIONS SHALL BE CONSTRUCTED IN ACCORDANCE WITH AN APPROPRIATE UL PENETRATION DESIGN FOR THE RATED ASSEMBLY IN WHICH THEY OCCUR.
D. ALL MATERIALS USED IN RATED ASSEMBLIES SHALL BEAR THE UL CLASSIFICATION MARK AS REQUIRED BY THE UL DESIGN OF THE ASSEMBLY IN WHICH THEY OCCUR.
E. PROVIDE 5/8" WATER RESISTANT GYP. BOARD AT ALL RESTROOMS, JANITORS CLOSETS, AND AREAS WITH DRINKING FOUNTAINS.
F. PROVIDE 5/8" DENS SHIELD SHEATHING AT LOCATIONS WHERE CERAMIC TILE IS LOCATED.
G. PROVIDE BRACING AT DOOR FRAME LOCATIONS ON STRIKE SIDE AND PROVIDE 0.312" THK. STEEL STUD AT DOOR STRIKE LOCATIONS.
H. ALL PARTITIONS, UNLESS OTHERWISE NOTED, ARE 12" ABOVE CEILING.

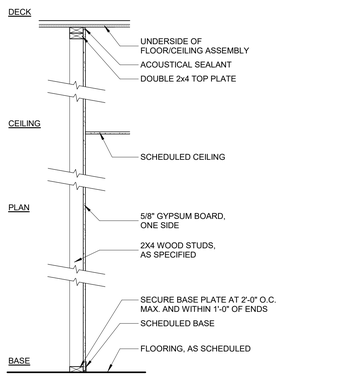

4" PARTITION, NON-RATED

NOTES:
1. WOOD STUD SIZE: 3 1/2"
2. OVERALL DIMENSION = 4 1/8"
3. NON-RATED

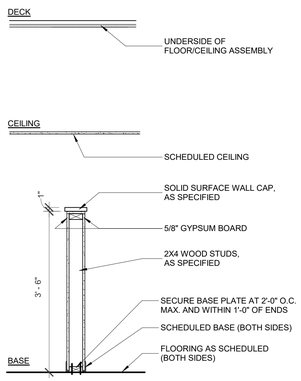

4" PARTITION, NON-RATED

NOTES:
1. WOOD STUD SIZE: 3 1/2"
2. OVERALL DIMENSION = 4 3/4"
3. NON-RATED

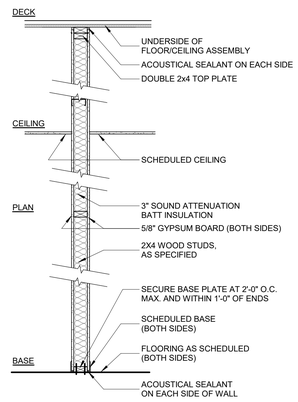

4" PARTITION, NON-RATED

NOTES:
1. WOOD STUD SIZE: 3 1/2"
2. OVERALL DIMENSION = 4 3/4"
3. NON-RATED

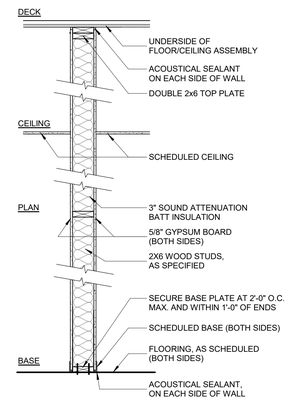

6" PARTITION, NON-RATED

NOTES:
1. WOOD STUD SIZE: 5 1/2"
2. OVERALL DIMENSION = 6 3/4"
3. NON-RATED

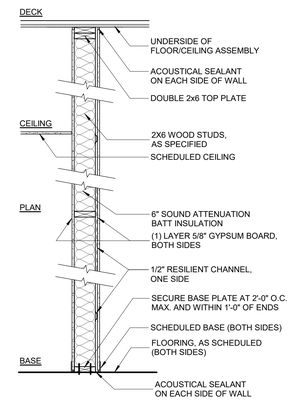

6" PARTITION, NON-RATED

NOTES:
1. WOOD STUD SIZE: 5 1/2"
2. OVERALL DIMENSION = 7 1/4"
3. NON-RATED

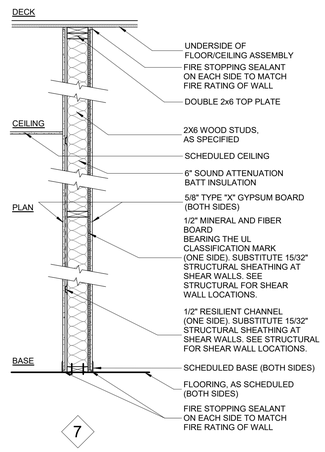

6" PARTITION, 1-HOUR FIRE RATED

NOTES:
1. WOOD STUD SIZE: 5 1/2"
2. OVERALL DIMENSION = 7 3/4"
3. 1-HOUR FIRE RATED (UL DESIGN U305)
4. STC = 56
5. PROVIDE FIRESTOPPING AND SEALANT AT WALL PENETRATIONS, TYPICAL

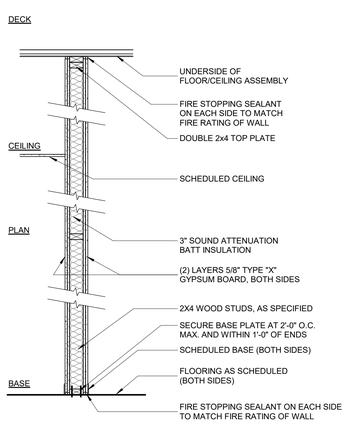

4" PARTITION, 2-HOUR FIRE RATED

NOTES:
1. WOOD STUD SIZE: 3 1/2"
2. OVERALL DIMENSION = 6"
3. 2-HOUR FIRE RATED (UL DESIGN U301)
4. STC = 55
5. PROVIDE FIRESTOPPING AND SEALANT AT WALL PENETRATIONS, TYPICAL

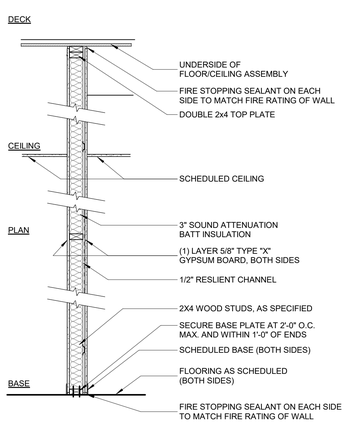

4" PARTITION, 1-HOUR FIRE RATED

NOTES:
1. WOOD STUD SIZE: 3 1/2"
2. OVERALL DIMENSION = 5 1/4"
3. 1-HOUR FIRE RATED (UL DESIGN U305)
4. STC = 56
5. PROVIDE FIRESTOPPING AND SEALANT AT WALL PENETRATIONS, TYPICAL

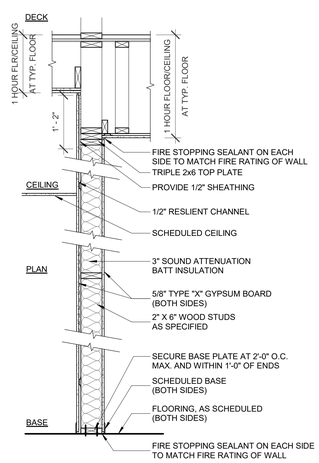

6" PARTITION, 1-HOUR FIRE RATED

NOTES:
1. WOOD STUD SIZE: 5 1/2"
2. OVERALL DIMENSION = 7 1/4"
3. 1-HOUR FIRE RATED (UL DESIGN U311)
4. STC = 52
5. PROVIDE FIRESTOPPING AND SEALANT AT WALL PENETRATIONS, TYPICAL

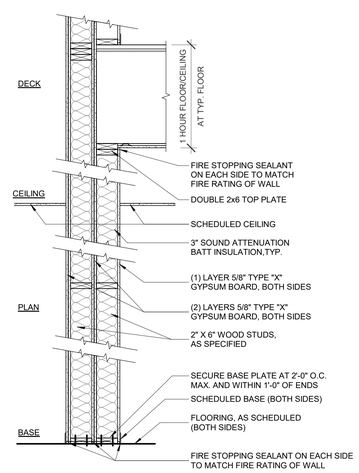

6" PARTITION, 1-HOUR FIRE RATED

NOTES:
1. WOOD STUD SIZE: 5 1/2"
2. OVERALL DIMENSION = 1 ' - 2 1/8"
3. 1-HOUR FIRE RATED (UL DESIGN U301)
4. STC = 62 W/DOUBLE WALL
5. PROVIDE FIRESTOPPING AND SEALANT AT WALL PENETRATIONS, TYPICAL

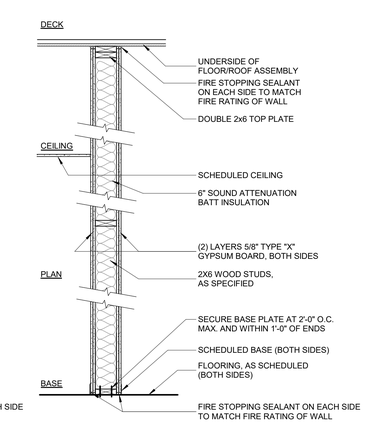

6" PARTITION, 2-HOUR FIRE RATED

NOTES:
1. WOOD STUD SIZE: 5 1/2"
2. OVERALL DIMENSION = 8"
3. 2-HOUR FIRE RATED (UL DESIGN U301)
4. STC = 55
5. PROVIDE FIRESTOPPING AND SEALANT AT WALL PENETRATIONS, TYPICAL

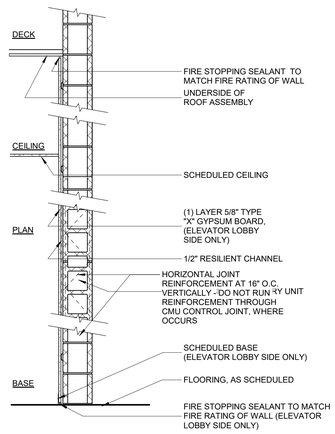

8" CMU, 2-HOUR FIRE RATED

NOTES:
1. CONCRETE MASONRY UNIT SIZE: 7 5/8"
2. OVERALL DIMENSION = 8 3/4"
3. 2-HOUR FIRE RATED (UL DESIGN U...)
4. STC = 49
5. PROVIDE FIRESTOPPING AND SEALANT AT WALL PENETRATIONS, TYPICAL

STAMP

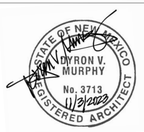

DYRON MURPHY ARCHITECTS, P.C.

4505 Montbel Place NE, Albuquerque, New Mexico 87107

SHIPROCK PINNACLE HOTEL & RESTAURANT

SHIPROCK, NEW MEXICO

100% CONSTRUCTION DOCUMENTS

ISSUED FOR CONSTRUCTION

NOVEMBER 3, 2023

PROJECT NUMBER	DRAWN BY	PROJ MGR
2022.10	Author	Designer

PARTITION TYPES

Sheet Title

Sheet Number of

A107

C:\Revit Local\Shiprock Pinnacle_Hotel_dbelbusch_jim-architects_cont.rvt
11/6/2023 7:55:08 AM
DYRON MURPHY ARCHITECTS, P.C.

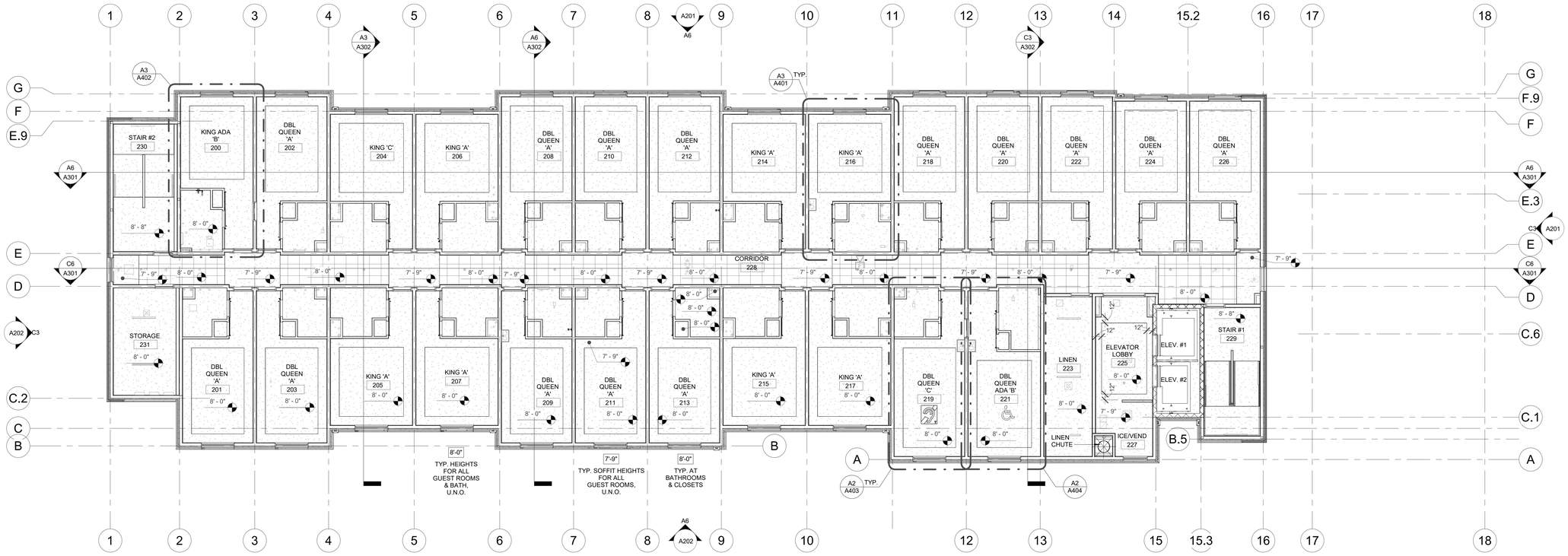

C6 **2nd FLOOR REFLECTED CEILING PLAN**
1/8" = 1'-0"

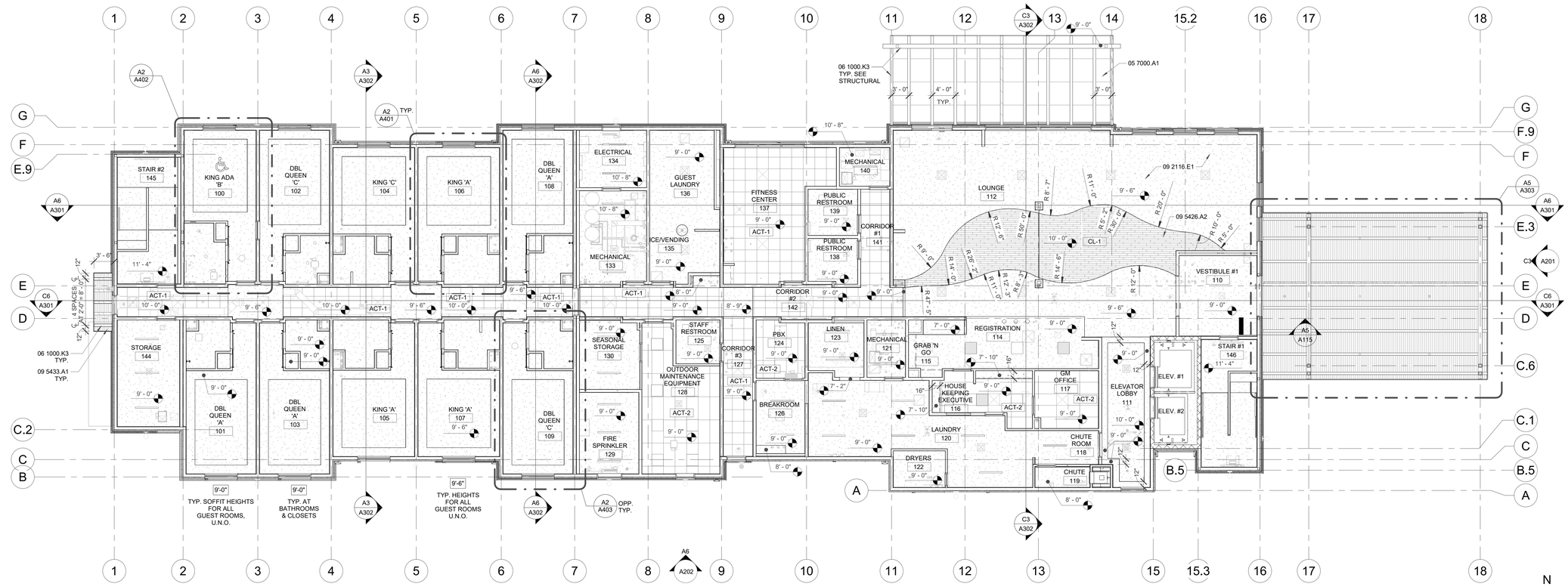

A6 **1st FLOOR REFLECTED CEILING PLAN - GROUND FLOOR**
1/8" = 1'-0"

REFLECTED CEILING LEGEND

- 2'X4' ACOUSTICAL SUSPENDED CEILING
- 2'X2' ACOUSTICAL SUSPENDED CEILING WITH REVEAL
- GYPSUM BOARD CEILING
- LINEAR WOOD CEILING SYSTEM
- ENGINEERED POLYMER WOOD CEILING

GENERAL CEILING LEGEND

N.T.S.
1. FOR ELECTRICAL SYMBOLS, SIZES AND TYPES, SEE ELECTRICAL DRAWINGS.
2. FOR MECHANICAL SYMBOLS, SIZES AND TYPES, SEE MECHANICAL DRAWINGS.

- WALL MOUNTED FIXTURE
- CEILING SURFACE OR PENDANT FIXTURE
- LINEAR LED LIGHT FIXTURE
- 2X2 LIGHT FIXTURE
- EXIT LIGHTS
- SUPPLY AIR DIFFUSER
- EXHAUST GRILL
- RETURN AIR DIFFUSER
- CEILING ACCESS HATCH

KEYED NOTES

05 7000.A1	DECORATIVE METAL PANEL
06 1000.K2	WOOD BEAM
06 1000.K3	ROUGH SAWN WOOD BEAM
09 2116.E1	GYPSUM CEILING BOARD
09 5426.A2	SUSPENDED WOOD CEILING SYSTEM
09 5433.A1	ENGINEERED POLYMER CEILING STRIPS

STAMP

STATE OF NEW MEXICO
DYRON V. MURPHY
No. 3713
11/3/2023
REGISTERED ARCHITECT

DYRON MURPHY ARCHITECTS, P.C.
4505 Montbel Place NE, Albuquerque, New Mexico 87107

SHIPROCK PINNACLE HOTEL & RESTAURANT

SHIPROCK, NEW MEXICO

100% CONSTRUCTION DOCUMENTS

ISSUED FOR CONSTRUCTION

NOVEMBER 3, 2023

PROJECT NUMBER	DRAWN BY	PROJ MGR
2022.10	Author	Designer

Sheet Title

REFLECTED CEILING PLAN - HOTEL - 1ST & 2ND FLOORS

Sheet Number

A108

11/6/2023 7:54:23 AM C:\Revit Local\Shiprock Pinnacle_NXW_dlindbuck_dmarchitects_com.rvt
DYRON MURPHY ARCHITECTS, P.C.

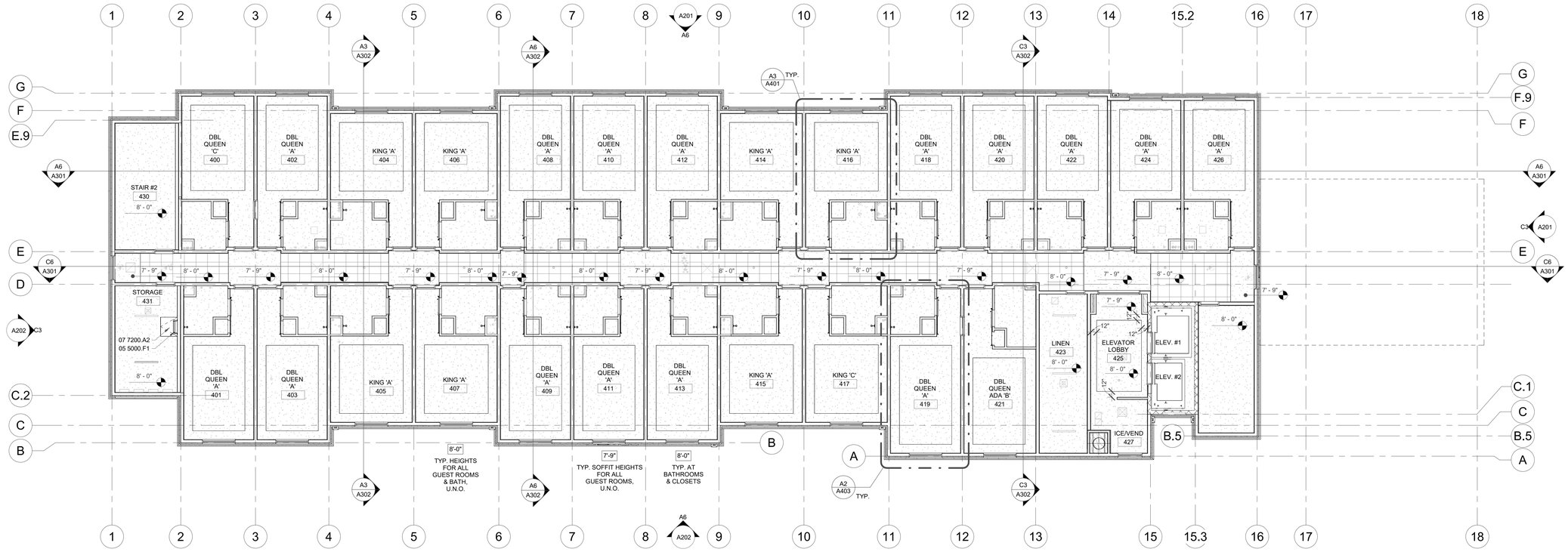

C6 **4TH FLOOR REFLECTED CEILING PLAN**
1/8" = 1'-0"

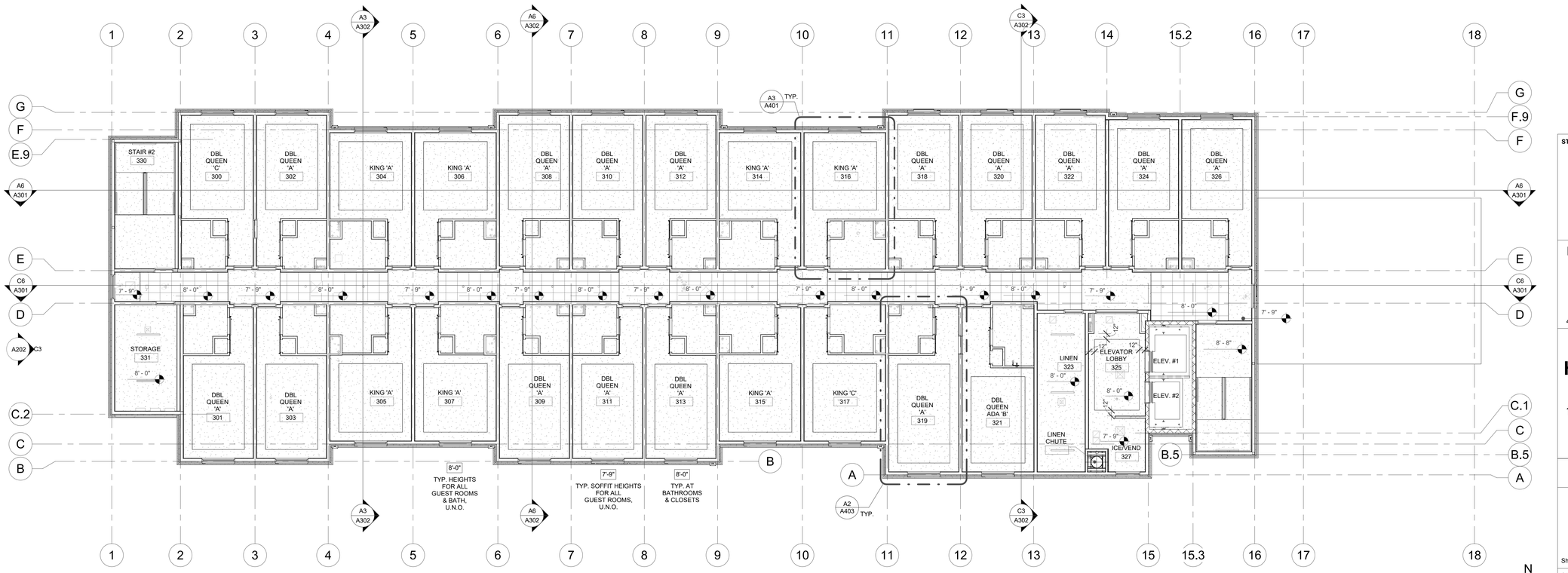

A6 **3RD FLOOR REFLECTED CEILING PLAN**
1/8" = 1'-0"

REFLECTED CEILING LEGEND

- 2'X4' ACOUSTICAL SUSPENDED CEILING
- 2'X2' ACOUSTICAL SUSPENDED CEILING WITH REVEAL
- GYPSUM BOARD CEILING
- LINEAR WOOD CEILING SYSTEM
- ENGINEERED POLYMER WOOD CEILING

GENERAL CEILING LEGEND

N.T.S.
1. FOR ELECTRICAL SYMBOLS, SIZES AND TYPES, SEE ELECTRICAL DRAWINGS.
2. FOR MECHANICAL SYMBOLS, SIZES AND TYPES, SEE MECHANICAL DRAWINGS.

- WALL MOUNTED FIXTURE
- CEILING SURFACE OR PENDANT FIXTURE
- LINEAR LED LIGHT FIXTURE
- 2X2 LIGHT FIXTURE
- EXIT LIGHTS
- SUPPLY AIR DIFFUSER
- EXHAUST GRILL
- RETURN AIR DIFFUSER
- CEILING ACCESS HATCH

KEYED NOTES

05 5000.F1	METAL ACCESS LADDER
07 7200.A2	ROOF HATCH WITH INTEGRAL, INSULATED CURB

STAMP

STATE OF NEW MEXICO
DYRON V. MURPHY
No. 3713
11/3/2023
REGISTERED ARCHITECT

DYRON MURPHY ARCHITECTS, P.C.
4505 Montbel Place NE, Albuquerque, New Mexico 87107

SHIPROCK PINNACLE HOTEL & RESTAURANT

SHIPROCK, NEW MEXICO

100% CONSTRUCTION DOCUMENTS

ISSUED FOR CONSTRUCTION

NOVEMBER 3, 2023

PROJECT NUMBER	DRAWN BY	PROJ MGR
2022.10	Author	Designer

REFLECTED CEILING PLAN - HOTEL - 3RD & 4TH FLOORS

Sheet Title

Sheet Number of

A109

11/6/2023 7:54:07 AM C:\Revit Local\Shiprock Pinnacle_NMM_dbolbuch_dmarchitects_com.rvt
DYRON MURPHY ARCHITECTS, P.C.

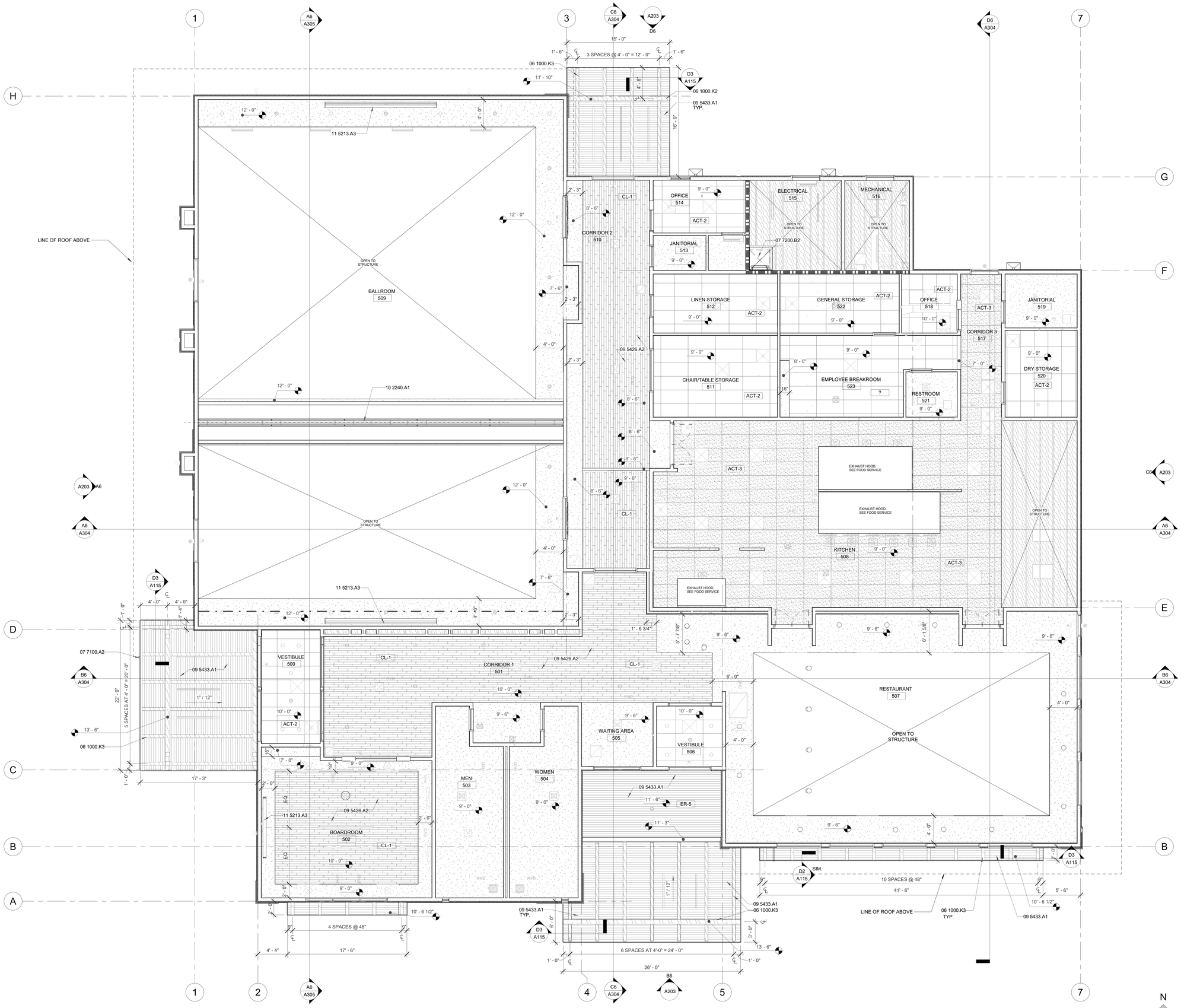

A6 REFLECTED CEILING PLAN
3/16" = 1'-0"

REFLECTED CEILING LEGEND

- 2'X4' ACOUSTICAL SUSPENDED CEILING
- 2'X2' ACOUSTICAL SUSPENDED CEILING WITH REVEAL
- 2'x4' ACOUSTICAL SUSPENDED CEILNIG (KITCHEN)
- GYPSUM BOARD CEILING
- LINEAR WOOD CEILING SYSTEM
- ENGINEERED POLYMER WOOD CEILING

GENERAL CEILING LEGEND

N.T.S.
1. FOR ELECTRICAL SYMBOLS, SIZES AND TYPES, SEE ELECTRICAL DRAWINGS.
2. FOR MECHANICAL SYMBOLS, SIZES AND TYPES, SEE MECHANICAL DRAWINGS.

- WALL MOUNTED FIXTURE
- CEILING SURFACE OR PENDANT FIXTURE
- LINEAR LED LIGHT FIXTURE
- 2X2 LIGHT FIXTURE
- EXIT LIGHTS
- SUPPLY AIR DIFFUSER
- EXHAUST GRILL
- RETURN AIR DIFFUSER
- CEILING ACCESS HATCH

KEYED NOTES

06 1000.K2	WOOD BEAM
06 1000.K3	ROUGH SAWN WOOD BEAM
07 7100.A2	METAL EDGE FLASHING
07 7200.B2	ROOF HATCH SAFETY RAILING SYSTEM
09 5426.A2	SUSPENDED WOOD CEILING SYSTEM
09 5433.A1	ENGINEERED POLYMER CEILING STRIPS
10 2240.A1	AUTOMATIC VERTICALLY RETRACTABLE ACOUSTICAL WALL
11 5213.A3	MOTORIZED PROJECTION SCREEN

STAMP

STATE OF NEW MEXICO
DYRON V. MURPHY
No. 3713
11/3/2023
REGISTERED ARCHITECT

DYRON MURPHY ARCHITECTS, P.C.
4505 Montbel Place NE, Albuquerque, New Mexico 87107

SHIPROCK PINNACLE HOTEL & RESTAURANT

SHIPROCK, NEW MEXICO

100% CONSTRUCTION DOCUMENTS

ISSUED FOR CONSTRUCTION

NOVEMBER 3, 2023

PROJECT NUMBER	DRAWN BY	PROJ MGR
2022.10	Author	Designer

REFLECTED CEILING PLAN - RESTAURANT

Sheet Title

Sheet Number

of

A110

11/3/2023 4:52:27 PM C:\Revit Local\Shiprock Pinnacle_Restaurant_dkuhlsuth_dm-architects_cpm.rvt
DYRON MURPHY ARCHITECTS, P.C.

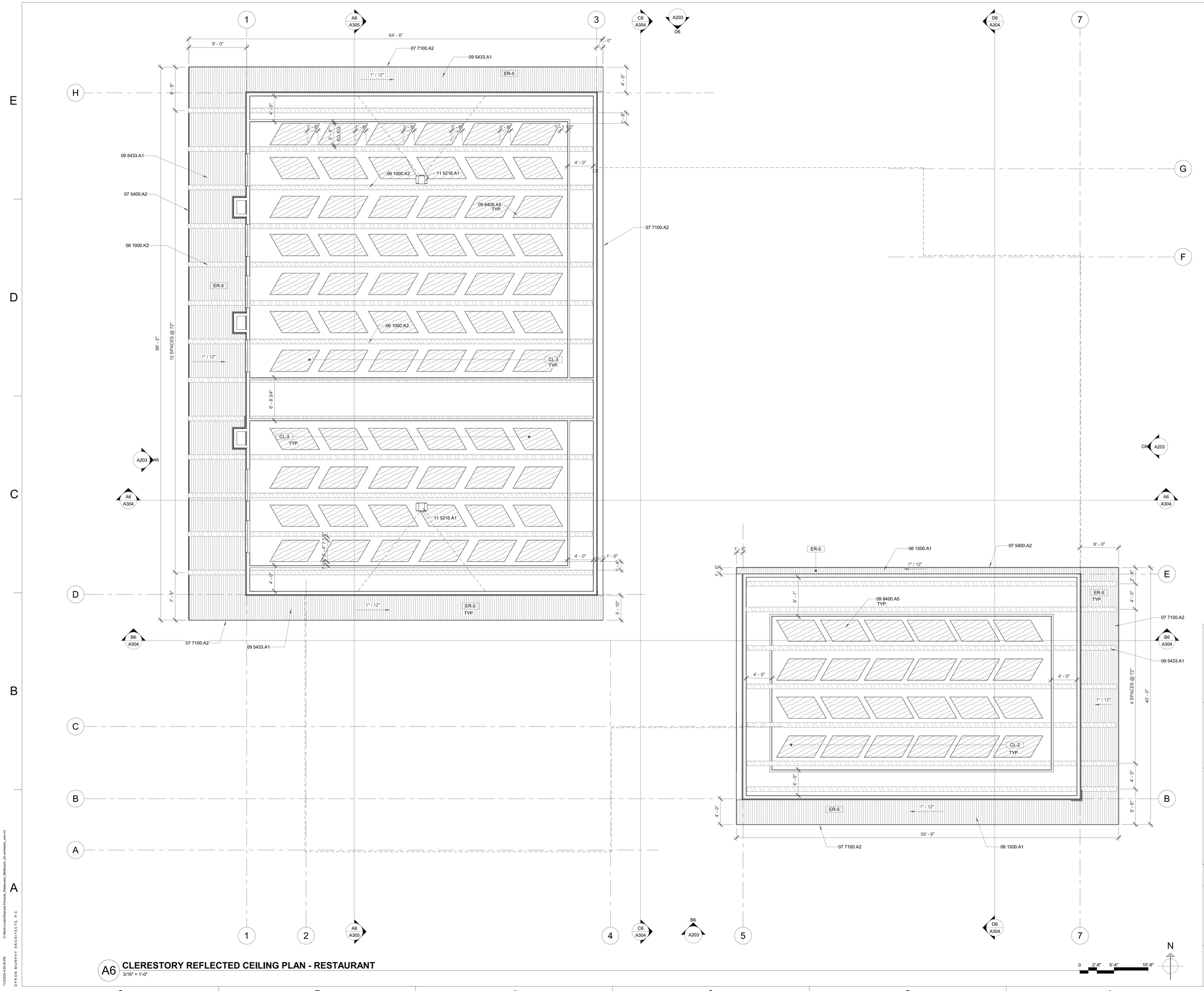

A6 CLERESTORY REFLECTED CEILING PLAN - RESTAURANT
3/16" = 1'-0"

REFLECTED CEILING LEGEND

- 2'X4' ACOUSTICAL SUSPENDED CEILING
- 2'X2' ACOUSTICAL SUSPENDED CEILING WITH REVEAL
- 2'x4' ACOUSTICAL SUSPENDED CEILNIG (KITCHEN)
- GYPSUM BOARD CEILING
- LINEAR WOOD CEILING SYSTEM
- ENGINEERED POLYMER WOOD CEILING

KEYED NOTES

06 1000.K2	WOOD BEAM
06 1500.A1	T&G ROOF DECK
07 5400.A2	TPO ROOF MEMBRANE SYSTEM
07 7100.A2	METAL EDGE FLASHING
09 5433.A1	ENGINEERED POLYMER CEILING STRIPS
09 8400.A5	SUSPENDED ACOUSTICAL CLOUD
11 5216.A1	PROJECTOR

STAMP

STATE OF NEW MEXICO
DYRON V. MURPHY
No. 3713
11/3/2023
REGISTERED ARCHITECT

DYRON MURPHY ARCHITECTS, P.C.

4505 Montbel Place NE, Albuquerque, New Mexico 87107

SHIPROCK PINNACLE HOTEL & RESTAURANT

SHIPROCK, NEW MEXICO

100% CONSTRUCTION DOCUMENTS

ISSUED FOR CONSTRUCTION

NOVEMBER 3, 2023

PROJECT NUMBER	DRAWN BY	PROJ MGR
2022.10	Author	Designer

CLERESTORY REFLECTED CEILING PLAN - RESTAURANT

Sheet Title

Sheet Number of

A111

KEYED NOTES

06 1000.K4	WOOD STUD FRAMING, SEE STRUCTURAL
09 2116.A2	5/8" GYPSUM BOARD
09 2116.B2	GYPSUM BOARD CORNER BEAD
09 2116.E1	GYPSUM CEILING BOARD
09 5429.A1	LINEAR WOOD CEILING SYSTEM

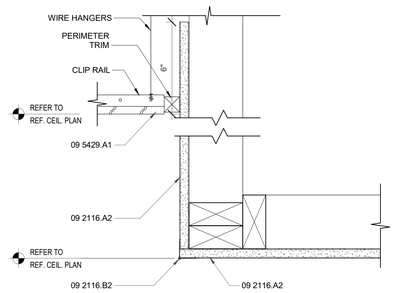

B3 **WOOD CEILING AT GYPSUM BOARD SOFFIT**
3" = 1'-0"

STRUT SCHEDULE	
LENGTH	EMT SIZE (NOMINAL)
≤ 2' - 0"	1/2"
≤ 3' - 0"	1"
≤ 4' - 0"	1 1/2"
≤ 5' - 0"	2 1/2"
≤ 6' - 0"	3"

NOTES:

1. HANGER WIRES SHALL BE 12 GA. MIN. SOFT ANNEALED, MILD STEEL WIRE. WIRES SHALL BE WRAPPED TIGHTLY AT RUNNERS AND SUPPORTS WITH A MIN. OF THREE TURNS.
2. CLIPS SHALL HOLD RUNNERS TIGHTLY TOGETHER. SPLICE CLIPS SHALL BE CAPABLE OF RESISTING AT LEAST 60 LBS IN TENSION OR COMPRESSION.
3. FOR MANUFACTURED SYSTEMS, SUBMIT SUBSTANTIATION IN ACCORDANCE WITH APPLICABLE BUILDING CODE STANDARDS.
4. RUNNERS SHALL BE CAPABLE OF SUPPORTING CEILING SYSTEM WITH DEFLECTIONS LESS THAN 0.133 INCHES.
5. LOCAL KINKS AND BENDS SHALL NOT BE MADE WITH HANGER WIRES FOR LEVELING.
6. ALL SUSPENDED SYSTEMS SHALL BE HUNG IN SIMILAR FASHION, INCLUDING, BUT NOT LIMITED TO, DUCTWORK, LIGHT FIXTURES, AND PIPING.
7. PROVIDE PER SPECIFIC PROJECT SEISMIC REQUIREMENTS.
8. CONTRACTOR TO HAVE MANUFACTURER'S SPECIFICATIONS FOR SUSPENDED CEILING SYSTEM ON JOB SITE.

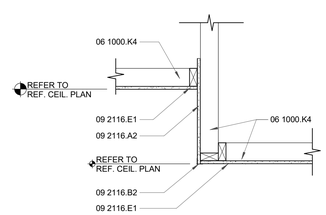

A5 **CEILING TRANSITION**
1" = 1'-0"

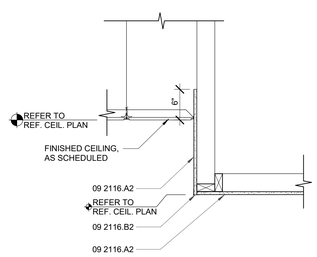

A4 **CEILING TRANSITION**
1" = 1'-0"

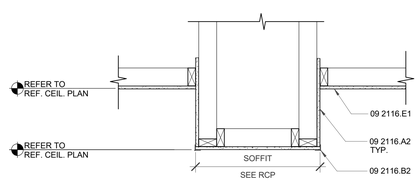

A3 **WOOD CEILING AND SOFFIT**
1" = 1'-0"

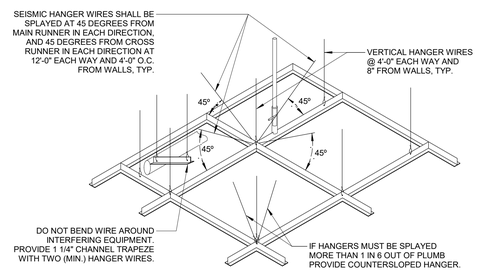

A2 **SEISMIC BRACING DETAIL**
1" = 1'-0"

STAMP

STATE OF NEW MEXICO
DYRON V. MURPHY
No. 3713
11/3/2023
REGISTERED ARCHITECT

DYRON MURPHY ARCHITECTS, P.C.

4505 Montbel Place NE, Albuquerque, New Mexico 87107

SHIPROCK PINNACLE HOTEL & RESTAURANT

SHIPROCK, NEW MEXICO

100% CONSTRUCTION DOCUMENTS

ISSUED FOR CONSTRUCTION

NOVEMBER 3, 2023

PROJECT NUMBER	DRAWN BY	PROJ MGR
2022.10	Author	Designer

CEILING DETAILS

Sheet Title

Sheet Number

A112

of

11/6/2023 7:55:20 AM C:\Revit Local\Shiprock Pinnacle_NMX_dlindbeck_dmarchitects_com.rvt
DYRON MURPHY ARCHITECTS, P.C.

KEYED NOTES

05 7000.A1	DECORATIVE METAL PANEL
07 5400.A1	TPO ROOF MEMBRANE
07 5400.A2	TPO ROOF MEMBRANE SYSTEM
07 5400.C1	ROOF WALKWAY PAD
07 5400.D3	TAPERED INSULATION CRICKETS
07 7200.B2	ROOF HATCH SAFETY RAILING SYSTEM

ROOF LEGEND

- SINGLE-PLY ROOF MEMBRANE
- ROOF CRICKET
- WALK PAD

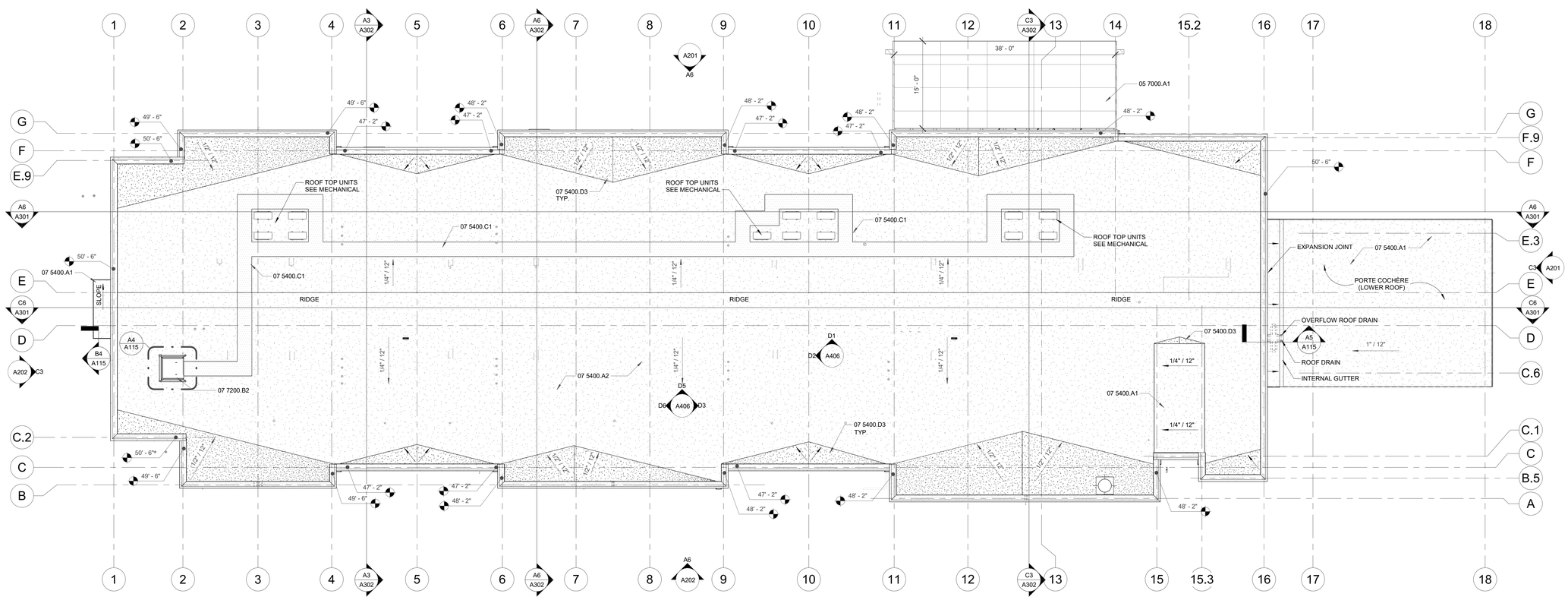

A6 **ROOF PLAN - HOTEL**
1/8" = 1'-0"

STAMP

STATE OF NEW MEXICO
DYRON V. MURPHY
No. 3713
11/3/2023
REGISTERED ARCHITECT

DYRON MURPHY ARCHITECTS, P.C.

4505 Montbel Place NE, Albuquerque, New Mexico 87107

SHIPROCK PINNACLE HOTEL & RESTAURANT

SHIPROCK, NEW MEXICO

100% CONSTRUCTION DOCUMENTS

ISSUED FOR CONSTRUCTION

NOVEMBER 3, 2023

PROJECT NUMBER	DRAWN BY	PROJ MGR
2022.10	Author	Designer

ROOF PLAN - HOTEL

Sheet Title

Sheet Number of

A113

DYRON MURPHY ARCHITECTS, P.C.

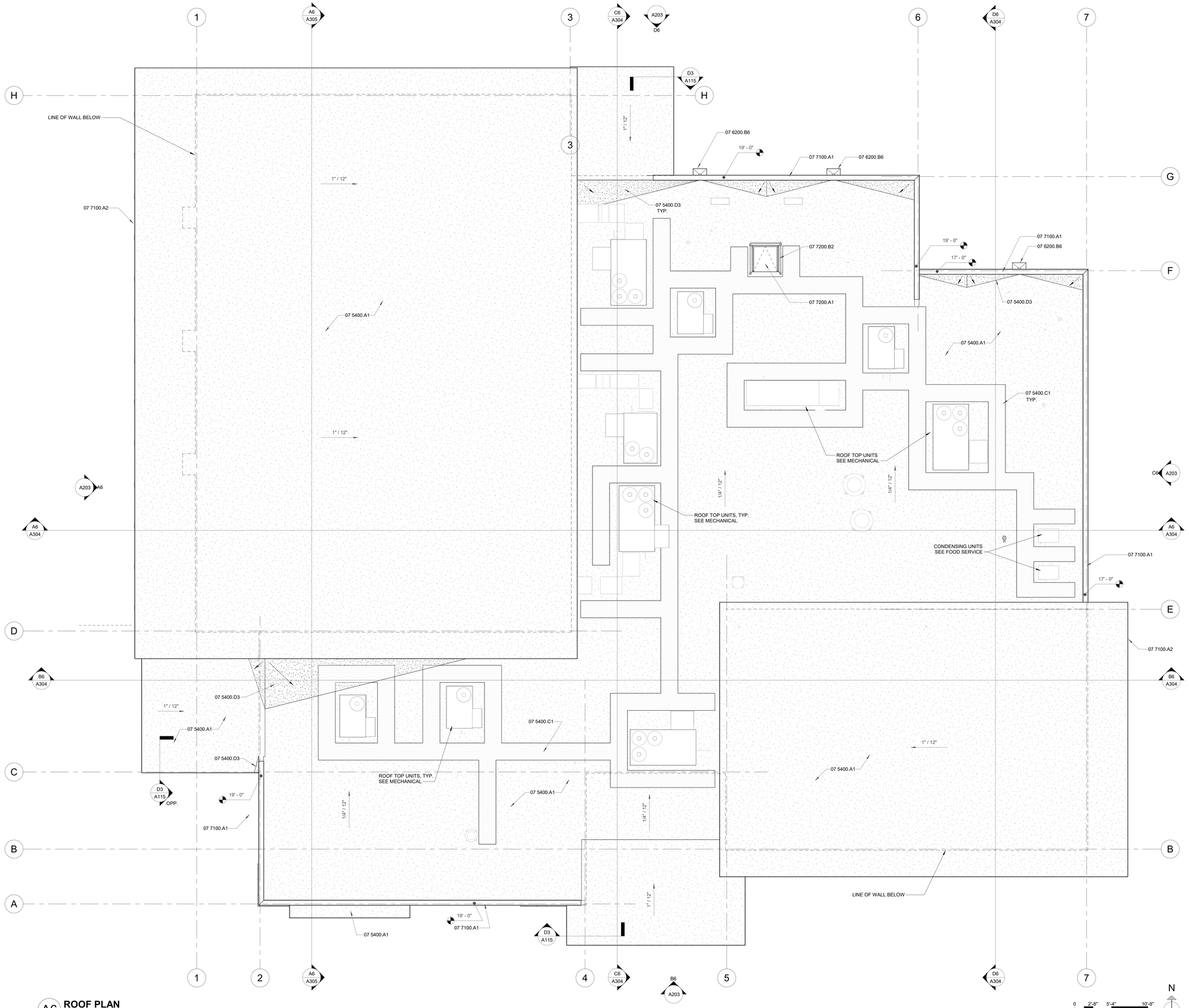

A6 **ROOF PLAN**
3/16" = 1'-0"

ROOF LEGEND

- SINGLE-PLY ROOF MEMBRANE
- ROOF CRICKET
- WALK PAD

KEYED NOTES

07 5400.A1	TPO ROOF MEMBRANE
07 5400.C1	ROOF WALKWAY PAD
07 5400.D3	TAPERED INSULATION CRICKETS
07 6200.B6	METAL GUTTER AND DOWNSPOUT
07 7100.A1	PRE-FINISHED METAL PARAPET COPING
07 7100.A2	METAL EDGE FLASHING
07 7200.A1	ROOF HATCH
07 7200.B2	ROOF HATCH SAFETY RAILING SYSTEM

STAMP

STATE OF NEW MEXICO
DYRON V. MURPHY
No. 3713
11/3/2023
REGISTERED ARCHITECT

DYRON MURPHY ARCHITECTS, P.C.

4505 Montbel Place NE, Albuquerque, New Mexico 87107

SHIPROCK PINNACLE HOTEL & RESTAURANT

SHIPROCK, NEW MEXICO

100% CONSTRUCTION DOCUMENTS

ISSUED FOR CONSTRUCTION

NOVEMBER 3, 2023

PROJECT NUMBER	DRAWN BY	PROJ MGR
2022.10	Author	Designer

ROOF PLAN - RESTAURANT

Sheet Title

Sheet Number of

A114

11/3/2023 4:57:51 PM C:\Revit Local\Shiprock Pinnacle_Restaurant_dkbzbuck_dmarchitects_cpm.rvt
DYRON MURPHY ARCHITECTS, P.C.

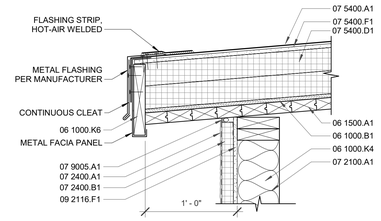

E2 RESTAURANT ROOF EDGE
1 1/2" = 1'-0"

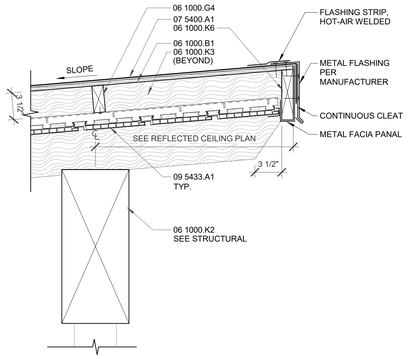

D2 RESTAURANT ENTRY CANOPY ROOF OVERHANG
1 1/2" = 1'-0"

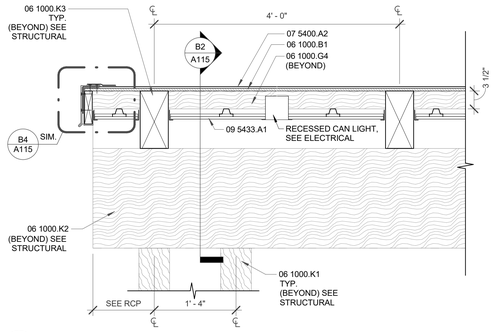

D3 RESTAURANT ENTRY CANOPY ROOF OVERHANG
1" = 1'-0"

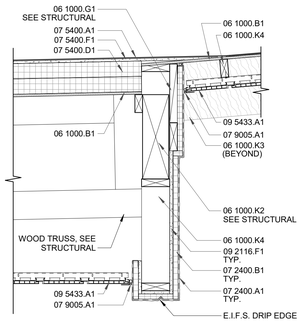

C4 RESTAURANT - SOUTH CANOPY ROOF CONNECTION
1" = 1'-0"

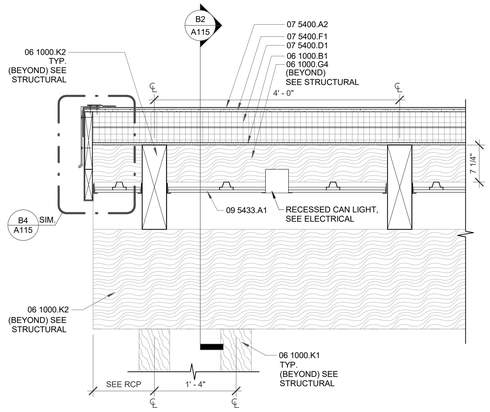

B3 HOTEL PORTE COCHERE ROOF OVERHANG
1" = 1'-0"

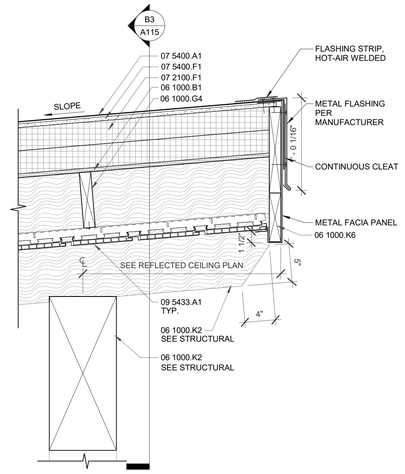

B2 HOTEL PORTE COCHERE ROOF OVERHANG
1 1/2" = 1'-0"

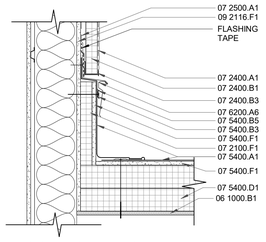

B5 ROOF TO E.I.F.S. WALL
1 1/2" = 1'-0"

B4 CANOPY ROOF OVERHANG
1 1/2" = 1'-0"

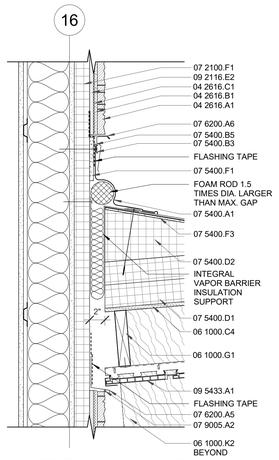

A6 ROOF EXPANSION JOINT - PORTE COCHERE TO BUILDING
1 1/2" = 1'-0"

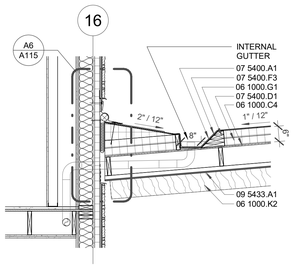

A5 ROOF EXPANSION JOINT - PORTE COCHERE TO BUILDING
1/2" = 1'-0"

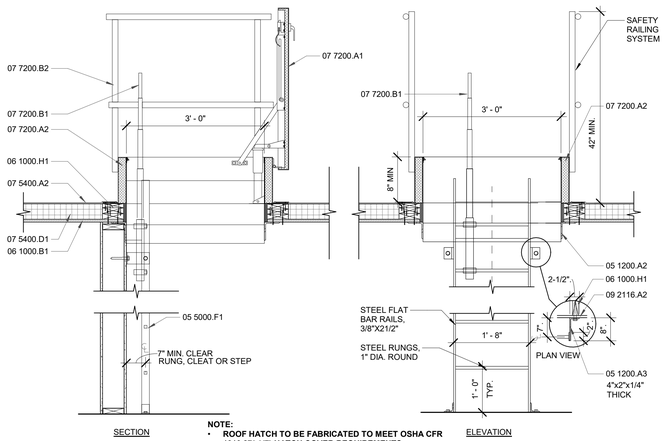

NOTE:
- **ROOF HATCH TO BE FABRICATED TO MEET OSHA CFR 1910.27(c)(7) HATCH COVER REQUIREMENTS**
- **LADDER TO BE FABRICATED TO MEET OSHA 29 CFR 1910.27 FIXED LADDER REQUIREMENTS.**
- **PRIME AND PAINT ALL EXPOSED STEEL.**

A4 ROOF HATCH AND LADDER
3/4" = 1'-0"

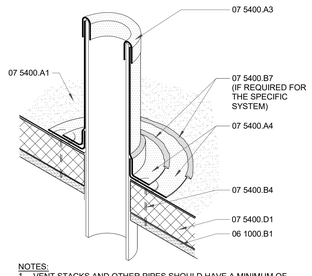

NOTES:
1. VENT STACKS AND OTHER PIPES SHOULD HAVE A MINIMUM OF 12 INCHES [300 mm] OF CLEARANCE ON ALL SIDES FROM WALLS,
CURBS, AND OTHER PROJECTIONS TO FACILITATE PROPER FLASHING.

A2 VENT DETAIL
6" = 1'-0"

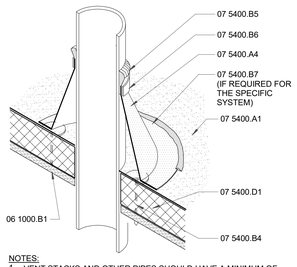

NOTES:
1. VENT STACKS AND OTHER PIPES SHOULD HAVE A MINIMUM OF 12 INCHES [300 mm] OF CLEARANCE ON ALL SIDES FROM WALLS,
CURBS, AND OTHER PROJECTIONS TO FACILITATE PROPER FLASHING.
2. NRCA RECOMMENDS FLASHINGS TO BE 8" [200mm] HIGH, HOWEVER, NRCA IS AWARE THAT PRE-MANUFACTURED BOOT FLASHINGS GENERALLY WILL NOT MEET THE HEIGHT REQUIREMENT.

A1 VENT DETAIL PREMANUFACTURED BOOT
6" = 1'-0"

KEYED NOTES

04 2616.A1	ADHERED MASONRY VENEER
04 2616.B1	MORTAR SETTING BED
04 2616.C1	METAL LATH
05 1200.A2	STEEL ANGLE, SEE STRUCTURAL
05 1200.A3	STEEL CHANNEL, SEE STRUCTURAL
05 5000.F1	METAL ACCESS LADDER
06 1000.B1	PLYWOOD SHEATHING
06 1000.C4	3/4" TREATED PLYWOOD SHEATHING
06 1000.D2	1/2" OSB SHEATHING
06 1000.G1	WOOD BLOCKING
06 1000.G4	2X WOOD BLOCKING/NAILER
06 1000.H1	TREATED WOOD BLOCKING
06 1000.K1	WOOD COLUMN
06 1000.K2	WOOD BEAM
06 1000.K3	ROUGH SAWN WOOD BEAM
06 1000.K4	WOOD STUD FRAMING, SEE STRUCTURAL
06 1000.K6	FASCIA BOARD
06 1500.A1	T&G ROOF DECK
07 2100.A1	BATT INSULATION
07 2100.F1	RIGID INSULATION BOARD
07 2400.A1	EXTERIOR INSULATION AND FINISH SYSTEM
07 2400.B1	EIFS INSULATION BOARD
07 2400.B3	EIFS VENTED DRAINAGE TRACK
07 2500.A1	WEATHER BARRIER
07 5400.A1	TPO ROOF MEMBRANE
07 5400.A2	TPO ROOF MEMBRANE SYSTEM
07 5400.A3	ROOF MEMBRANE CAP
07 5400.A4	PREFABRICATED MEMBRANE
07 5400.B3	TERMINATION BAR WITH FASTENERS PER MFGR.
07 5400.B4	PLATE FASTENERS INTO DECK
07 5400.B5	SEALANT
07 5400.B6	DRAWBAND
07 5400.B7	ROOF MANUFACTURERS BONDING ADHESIVE
07 5400.D1	RIGID ROOF INSULATION
07 5400.D2	TAPERED RIGID INSULATION
07 5400.F1	1/2" GLASS MAT FACED GYPSUM ROOF BOARD
07 5400.F3	1/4" GLASS-MAT FACED GYPSUM ROOF BOARD
07 6200.A5	METAL FLASHING
07 6200.A6	TWO PIECE COUNTER FLASHING
07 7200.A1	ROOF HATCH
07 7200.A2	ROOF HATCH WITH INTEGRAL, INSULATED CURB
07 7200.B1	TELESCOPING SAFETY POST
07 7200.B2	ROOF HATCH SAFETY RAILING SYSTEM
07 9005.A1	CONTINUOUS JOINT SEALANT BEAD W/ BACKER ROD
07 9005.A2	SEALANT, CONTINUOUS
09 2116.A2	5/8" GYPSUM BOARD
09 2116.E2	CEMENT BOARD
09 2116.F1	1/2" GLASS-MAT FACED GYPSUM SHEATHING BOARD
09 5433.A1	ENGINEERED POLYMER CEILING STRIPS

STAMP

DYRON MURPHY ARCHITECTS, P.C.

4505 Montbel Place NE, Albuquerque, New Mexico 87107

SHIPROCK PINNACLE HOTEL & RESTAURANT

SHIPROCK, NEW MEXICO

100% CONSTRUCTION DOCUMENTS

ISSUED FOR CONSTRUCTION

NOVEMBER 3, 2023

PROJECT NUMBER	DRAWN BY	PROJ MGR
2022.10	Author	Designer

ROOF DETAILS

Sheet Title

Sheet Number A115 of

11/6/2023 8:17:42 AM C:\Revit Local\Shiprock Pinnacle_Hotel_dmaburch_dm-architects_com.rvt
DYRON MURPHY ARCHITECTS, P.C.

GENERAL NOTES

A. ALL METAL PARAPET COPINGS AND FLASHING COLORS TO BE SELECTED BY ARCHITECT.
B. ALL EXTERNAL HOLLOW METAL FRAME COLORS TO BE SELECTED BY ARCHITECT.
C. ALL STUCCO COLORS TO BE SELECTED BY ARCHITECT.
D. SEE ROOF PLAN FOR TOP OF WALL ELEVATIONS.
E. DIMENSIONS SHOWN ON EXTERIOR ELEVATIONS ARE TO FINISHED FACE UNLESS NOTED OTHERWISE.
F. COORDINATE FINISHED FACE DIMENSIONS WITH DIMENSION PLAN AND DETAIL DIMENSIONS.
G. ALL EXPOSED STEEL SHALL BE PRIMED AND PAINTED. COLOR BY ARCHITECT.
H. ALL ROOF DRAIN OUTLETS TO DAYLIGHT AT 6" A.F.F. COORDINATE WITH ARCHITECTURAL, PLUMBING, AND CIVIL PLANS.
I. STUCCO CONTROL JOINTS INDICATED BY (C.J.)

EXTERIOR FINISH NOTES

A. ALL EXPOSED STEEL TO BE PRIMED AND PAINTED. COLOR TO BE SELECTED BY ARCHITECT.
B. ALL SCUPPERS AND DOWNSPOUTS COLOR TO BE SELECTED BY ARCHITECT.
C. ALL EXTERIOR HOLLOW METAL DOORS AND FRAMES COLOR TO BE SELECTED BY ARCHITECT.
D. STUCCO/EIFS COLORS TO BE SELECTED BY ARCHITECT.
E. STONE VENEER COLOR TO BE SELECTED BY ARCHITECT.

E1	EIFS COLOR 1
E2	EIFS COLOR 2
S1	STUCCO COLOR 1
STV1	STONE VENEER COLOR 1

KEYED NOTES

04 2616.A1	ADHERED MASONRY VENEER
05 7000.A1	DECORATIVE METAL PANEL
06 1000.K1	WOOD COLUMN
06 1000.K2	WOOD BEAM
06 1000.K3	ROUGH SAWN WOOD BEAM
07 2400.A1	EXTERIOR INSULATION AND FINISH SYSTEM
07 6200.B5	METAL DOWNSPOUT
07 7100.A2	METAL EDGE FLASHING
08 1113.A1	HOLLOW METAL DOOR AND FRAME
08 3200.A1	SLIDING GLASS DOOR
08 4313.A1	ALUMINUM FRAMED STOREFRONT
08 5113.A1	ALUMINUM WINDOW FRAME
08 5113.A3	ALUMINUM WINDOW
08 9100.A1	LOUVER

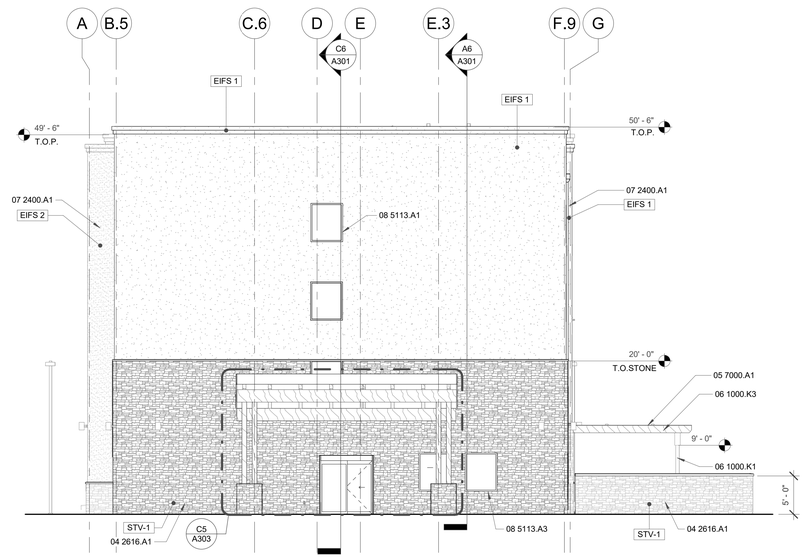

C3 **EAST ELEVATION**
1/8" = 1'-0"

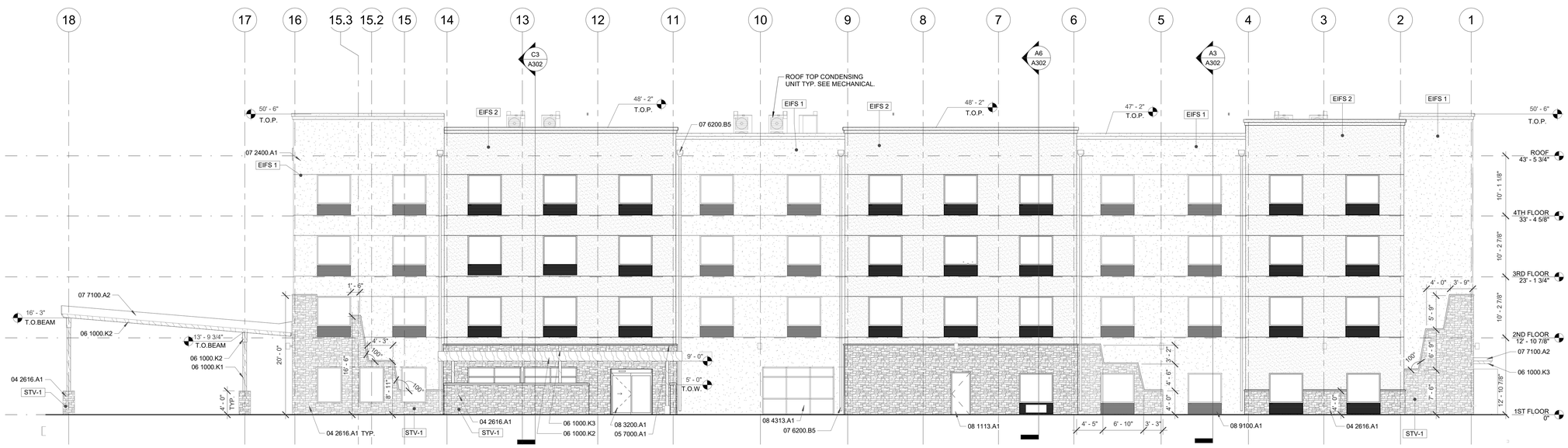

A6 **NORTH ELEVATION**
1/8" = 1'-0"

STAMP

DYRON MURPHY ARCHITECTS, P.C.

4505 Montbel Place NE, Albuquerque, New Mexico 87107

SHIPROCK PINNACLE HOTEL & RESTAURANT

SHIPROCK, NEW MEXICO

100% CONSTRUCTION DOCUMENTS

ISSUED FOR CONSTRUCTION

NOVEMBER 3, 2023

PROJECT NUMBER	DRAWN BY	PROJ MGR
2022.10	Author	Designer

EXTERIOR ELEVATIONS - HOTEL

Sheet Title

Sheet Number

of

A201

11/6/2023 8:21:08 AM C:\Revit Local\Shiprock Pinnacle_Hotel_dbelbusch_dm-architects_cen.rvt
DYRON MURPHY ARCHITECTS, P.C.

GENERAL NOTES

A. ALL METAL PARAPET COPINGS AND FLASHING COLORS TO BE SELECTED BY ARCHITECT.
B. ALL EXTERNAL HOLLOW METAL FRAME COLORS TO BE SELECTED BY ARCHITECT.
C. ALL STUCCO COLORS TO BE SELECTED BY ARCHITECT.
D. SEE ROOF PLAN FOR TOP OF WALL ELEVATIONS.
E. DIMENSIONS SHOWN ON EXTERIOR ELEVATIONS ARE TO FINISHED FACE UNLESS NOTED OTHERWISE.
F. COORDINATE FINISHED FACE DIMENSIONS WITH DIMENSION PLAN AND DETAIL DIMENSIONS.
G. ALL EXPOSED STEEL SHALL BE PRIMED AND PAINTED. COLOR BY ARCHITECT.
H. ALL ROOF DRAIN OUTLETS TO DAYLIGHT AT 6" A.F.F. COORDINATE WITH ARCHITECTURAL, PLUMBING, AND CIVIL PLANS.
I. STUCCO CONTROL JOINTS INDICATED BY (C.J.)

EXTERIOR FINISH NOTES

A. ALL EXPOSED STEEL TO BE PRIMED AND PAINTED. COLOR TO BE SELECTED BY ARCHITECT.
B. ALL SCUPPERS AND DOWNSPOUTS COLOR TO BE SELECTED BY ARCHITECT.
C. ALL EXTERIOR HOLLOW METAL DOORS AND FRAMES COLOR TO BE SELECTED BY ARCHITECT.
D. STUCCO/EIFS COLORS TO BE SELECTED BY ARCHITECT.
E. STONE VENEER COLOR TO BE SELECTED BY ARCHITECT.

E1	EIFS COLOR 1
E2	EIFS COLOR 2
S1	STUCCO COLOR 1
STV1	STONE VENEER COLOR 1

KEYED NOTES

04 2616.A1	ADHERED MASONRY VENEER
05 7000.A1	DECORATIVE METAL PANEL
06 1000.K1	WOOD COLUMN
06 1000.K3	ROUGH SAWN WOOD BEAM
07 2400.A1	EXTERIOR INSULATION AND FINISH SYSTEM
07 6200.B5	METAL DOWNSPOUT
08 1113.A1	HOLLOW METAL DOOR AND FRAME
08 5113.A1	ALUMINUM WINDOW FRAME
08 5113.A3	ALUMINUM WINDOW
08 9100.A1	LOUVER

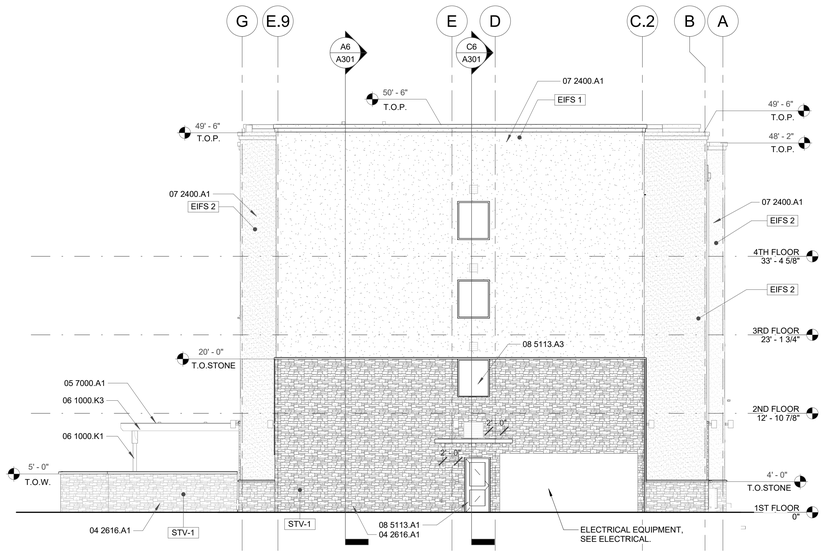

C3 **WEST ELEVATION**
1/8" = 1'-0"

0 4' 8' 16'

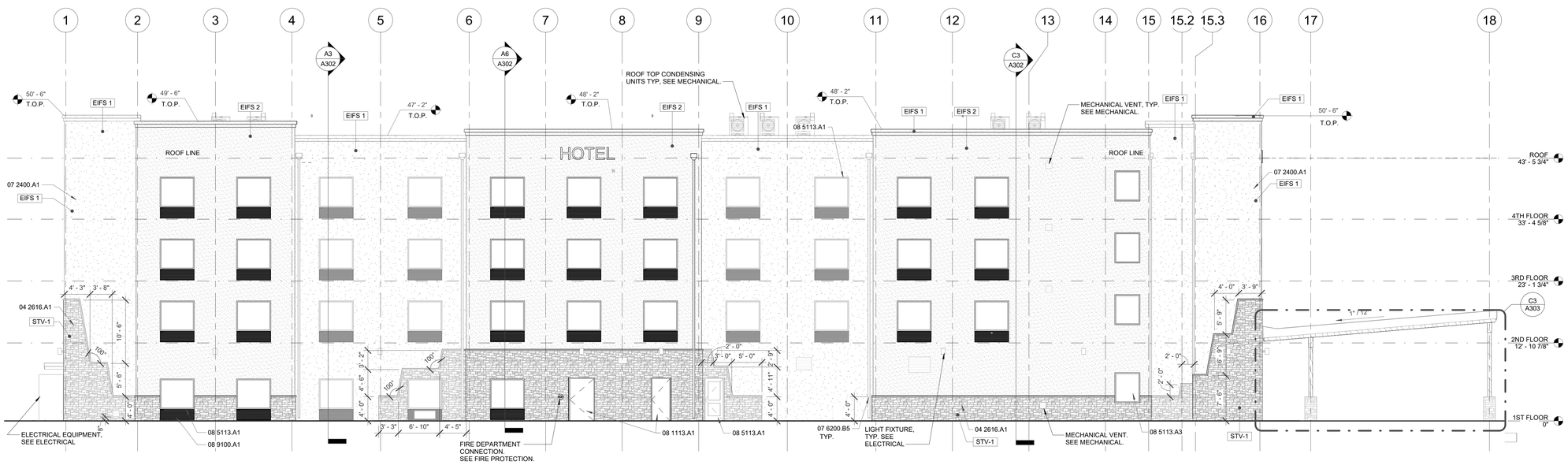

A6 **SOUTH ELEVATION**
1/8" = 1'-0"

0 4' 8' 16'

STAMP

STATE OF NEW MEXICO
DYRON V. MURPHY
No. 3713
REGISTERED ARCHITECT
11/3/2023

DYRON MURPHY ARCHITECTS, P.C.

4505 Montbel Place NE, Albuquerque, New Mexico 87107

SHIPROCK PINNACLE HOTEL & RESTAURANT

SHIPROCK, NEW MEXICO

100% CONSTRUCTION DOCUMENTS

ISSUED FOR CONSTRUCTION

NOVEMBER 3, 2023

PROJECT NUMBER	DRAWN BY	PROJ MGR
2022.10	Author	Designer

EXTERIOR ELEVATIONS - HOTEL

Sheet Title

Sheet Number of

A202

11/6/2023 8:21:49 AM C:\Revit Local\Shiprock Pinnacle_Hotel_dfe8bxxh_dm-architects_cent.rvt
DYRON MURPHY ARCHITECTS, P.C.

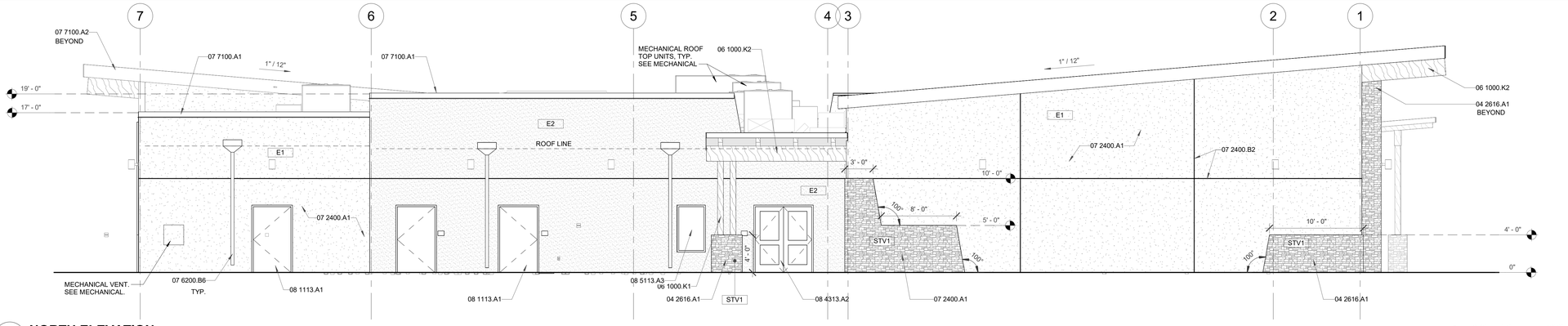

D6 **NORTH ELEVATION**
3/16" = 1'-0"

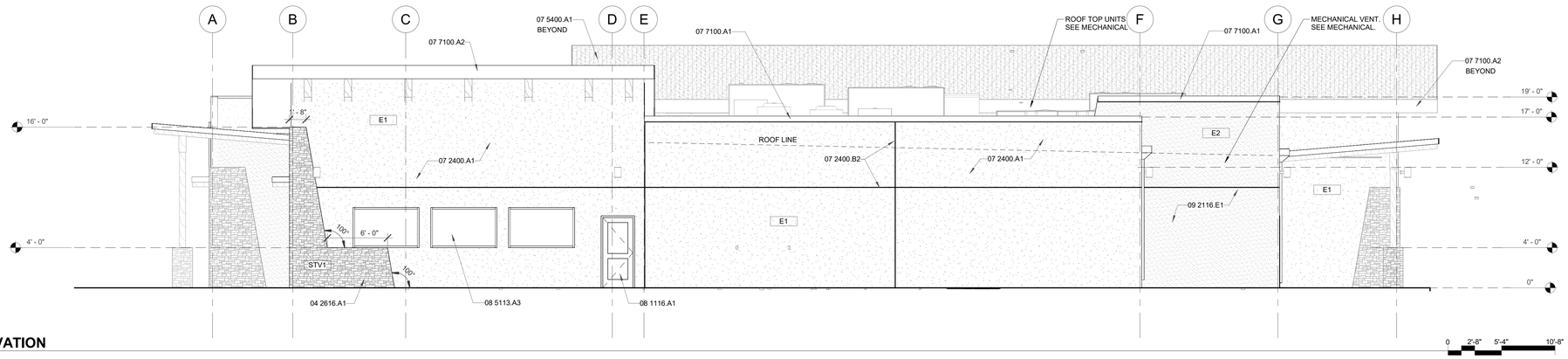

C6 **EAST ELEVATION**
3/16" = 1'-0"

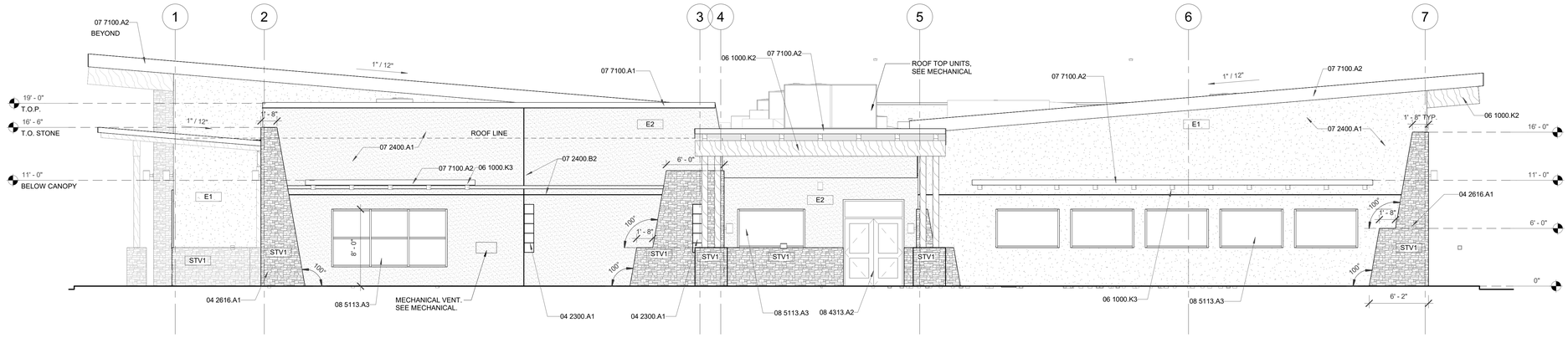

B6 **SOUTH ELEVATION**
3/16" = 1'-0"

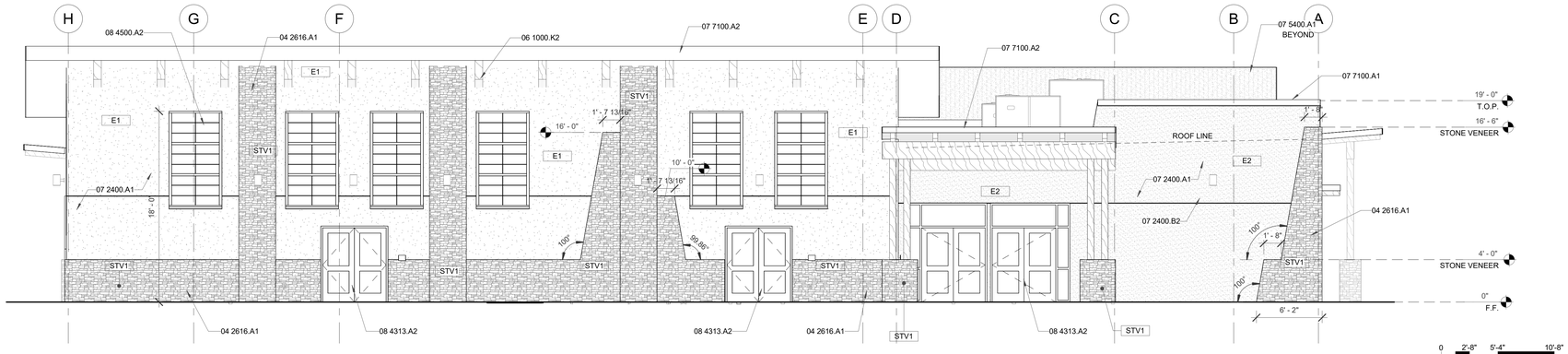

A6 **WEST ELEVATION**
3/16" = 1'-0"

GENERAL NOTES

A. ALL METAL PARAPET COPINGS AND FLASHING COLORS TO BE SELECTED BY ARCHITECT.
B. ALL EXTERNAL HOLLOW METAL FRAME COLORS TO BE SELECTED BY ARCHITECT.
C. ALL STUCCO COLORS TO BE SELECTED BY ARCHITECT.
D. SEE ROOF PLAN FOR TOP OF WALL ELEVATIONS.
E. DIMENSIONS SHOWN ON EXTERIOR ELEVATIONS ARE TO FINISHED FACE UNLESS NOTED OTHERWISE.
F. COORDINATE FINISHED FACE DIMENSIONS WITH DIMENSION PLAN AND DETAIL DIMENSIONS.
G. ALL EXPOSED STEEL SHALL BE PRIMED AND PAINTED. COLOR BY ARCHITECT.
H. ALL ROOF DRAIN OUTLETS TO DAYLIGHT AT 6" A.F.F. COORDINATE WITH ARCHITECTURAL, PLUMBING, AND CIVIL PLANS.
I. STUCCO CONTROL JOINTS INDICATED BY (C.J.)

EXTERIOR FINISH NOTES

A. ALL EXPOSED STEEL TO BE PRIMED AD PAINTED. COLOR TO BE SELECTED BY ARCHITECT.
B. ALL SCUPPERS AND DOWNSPOUTS COLOR TO BE SELECTED BY ARCHITECT.
C. ALL EXTERIOR HOLLOW METAL DOORS AND FRAMES COLOR TO BE SELECTED BY ARCHITECT.
D. (INSULATED METAL PANEL) COLORS TO BE SELECTED BY ARCHITECT.
E. (STUCCO/EIFS) COLORS TO BE SELECTED BY ARCHITECT.

E1	EIFS COLOR 1
E2	EIFS COLOR 2
STV1	STONE VENEER COLOR 1

KEYED NOTES

04 2300.A1	GLASS BLOCK
04 2616.A1	ADHERED MASONRY VENEER
06 1000.K1	WOOD COLUMN
06 1000.K2	WOOD BEAM
06 1000.K3	ROUGH SAWN WOOD BEAM
07 2400.A1	EXTERIOR INSULATION AND FINISH SYSTEM
07 2400.B2	EIFS CONTROL JOINT
07 5400.A1	TPO ROOF MEMBRANE
07 6200.B6	METAL GUTTER AND DOWNSPOUT
07 7100.A1	PRE-FINISHED METAL PARAPET COPING
07 7100.A2	METAL EDGE FLASHING
08 1113.A1	HOLLOW METAL DOOR AND FRAME
08 1116.A1	ALUMINUM FRAME AND DOOR
08 4313.A2	ALUMINUM FRAMED STOREFRONT DOOR
08 4500.A2	TRANSLUCENT WINDOW PANEL
08 5113.A3	ALUMINUM WINDOW
09 2116.A2	5/8" GYPSUM BOARD
09 2116.E1	GYPSUM CEILING BOARD

STAMP

STATE OF NEW MEXICO
DYRON V. MURPHY
No. 3713
11/3/2023
REGISTERED ARCHITECT

DYRON MURPHY ARCHITECTS, P.C.

4505 Montbel Place NE, Albuquerque, New Mexico 87107

SHIPROCK PINNACLE HOTEL & RESTAURANT

SHIPROCK, NEW MEXICO

100% CONSTRUCTION DOCUMENTS

ISSUED FOR CONSTRUCTION

NOVEMBER 3, 2023

PROJECT NUMBER	DRAWN BY	PROJ MGR
2022.10	Author	Designer

EXTERIOR ELEVATIONS - RESTAURANT

Sheet Title

Sheet Number

of

A203

11/3/2023 5:01:14 PM C:\Revit Local\Shiprock Pinnacle_Restaurant_dkobuch_dm-architects_cam.rvt
DYRON MURPHY ARCHITECTS, P.C.

GENERAL NOTES

A. ALL EXPOSED STRUCTURAL STEEL SHALL BE PRIMED AND PAINTED.
B. COORDINATE ALL PENETRATIONS THROUGH FIRE AND SMOKE ASSEMBLIES AS INDICATED IN LIFE SAFETY PLAN AND PARTITION TYPES. PROVIDE DAMPERS, SEALS AND ALL OTHER APPURTENANCES AS NECESSARY TO ENSURE FIRE RATING COMPLIANCE OF PENETRATIONS.
C. ALL ASSEMBLIES AND PENETRATIONS TO BE COORDINATED WITH RATING INDICATED IN CODE ANALYSIS/LIFE SAFETY PLANS. CONTRACTOR TO PROVIDE UL RATED ASSEMBLIES AS REQUIRED. CONTRACTOR TO PROVED UL RATINGS IN SUBMITTALS FOR ALL PENETRATIONS AS REQUIRED.

KEYED NOTES

03 3000.A1	CONCRETE SLAB
03 3000.A6	GYPCRETE TOPPING, SEE STRUCTURAL
03 3000.B1	CONCRETE FOOTING
03 3000.B2	CONCRETE STEM WALL
04 2616.A1	ADHERED MASONRY VENEER
06 1000.C4	3/4" TREATED PLYWOOD SHEATHING
06 1000.K2	WOOD BEAM
06 1000.K4	WOOD STUD FRAMING, SEE STRUCTURAL
07 2100.A1	BATT INSULATION
07 2100.F1	RIGID INSULATION BOARD
07 2400.A1	EXTERIOR INSULATION AND FINISH SYSTEM
07 2400.B1	EIFS INSULATION BOARD
07 5400.A1	TPO ROOF MEMBRANE
07 5400.D1	RIGID ROOF INSULATION
07 7200.B2	ROOF HATCH SAFETY RAILING SYSTEM
08 3200.A1	SLIDING GLASS DOOR
08 5113.A3	ALUMINUM WINDOW
09 2116.A2	5/8" GYPSUM BOARD
09 2116.E1	GYPSUM CEILING BOARD
09 2116.F1	1/2" GLASS-MAT FACED GYPSUM SHEATHING BOARD
09 2216.C1	FURRING CHANNEL
09 5100.A1	SUSPENDED ACOUSTICAL CEILING TILE SYSTEM
09 5433.A1	ENGINEERED POLYMER CEILING STRIPS
10 4400.A1	FIRE EXTINGUISHER
32 1300.A1	CONCRETE SIDEWALK

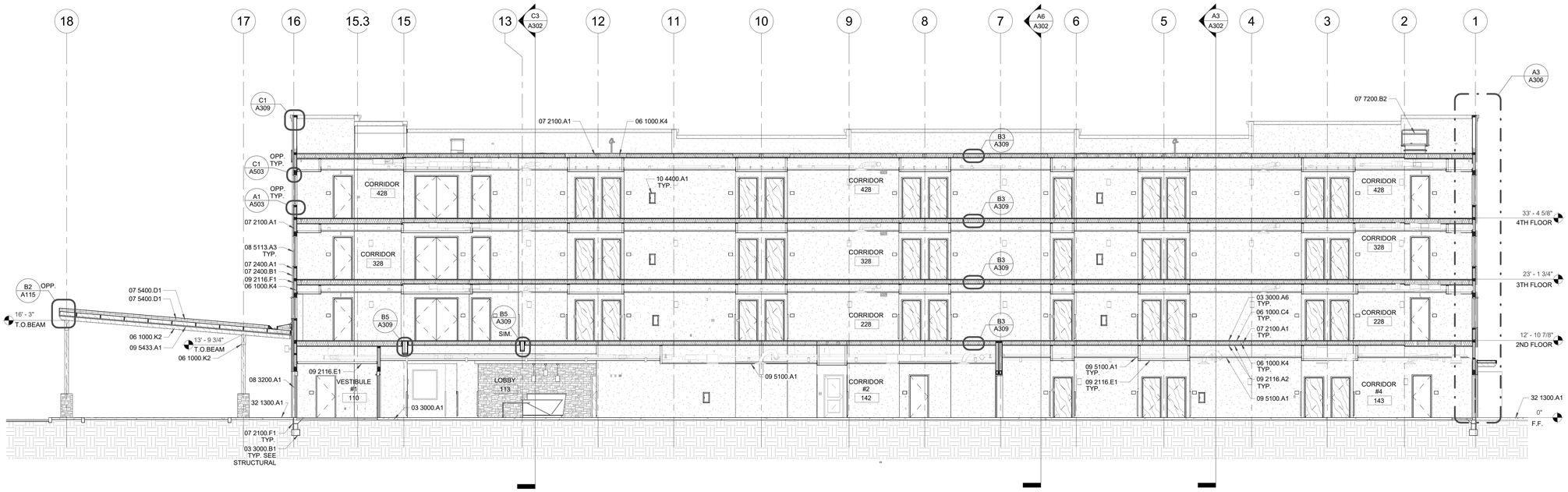

C6 **BUILDING SECTION B**
1/8" = 1'-0"

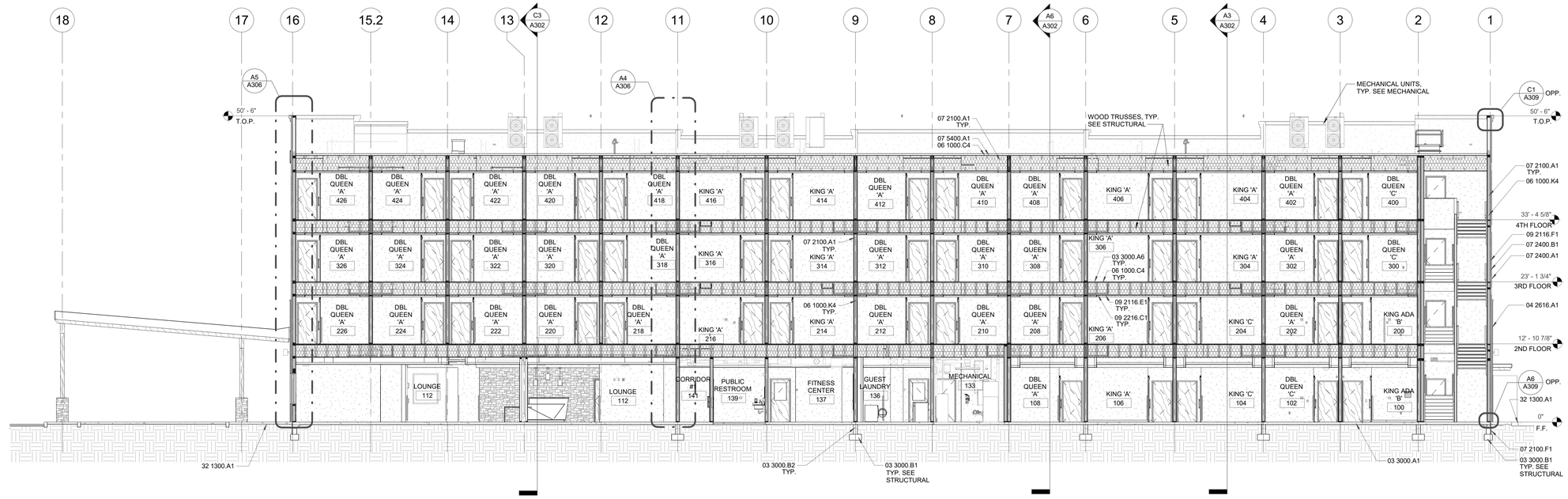

A6 **BUILDING SECTION A**
1/8" = 1'-0"

STAMP

STATE OF NEW MEXICO
DYRON V. MURPHY
No. 3713
11/3/2023
REGISTERED ARCHITECT

DYRON MURPHY ARCHITECTS, P.C.

4505 Montbel Place NE, Albuquerque, New Mexico 87107

SHIPROCK PINNACLE HOTEL & RESTAURANT

SHIPROCK, NEW MEXICO

100% CONSTRUCTION DOCUMENTS

ISSUED FOR CONSTRUCTION

NOVEMBER 3, 2023

PROJECT NUMBER	DRAWN BY	PROJ MGR
2022.10	DF	DM

BUILDING SECTIONS - HOTEL

Sheet Title

Sheet Number of

A301

C:\Revit Local\Shiprock Pinnacle_Hotel_dmiller.rvt, dm-architects_conc.rvt
11/6/2023 7:59:30 AM
DYRON MURPHY ARCHITECTS, P.C.

GENERAL NOTES

A. ALL EXPOSED STRUCTURAL STEEL SHALL BE PRIMED AND PAINTED.
B. COORDINATE ALL PENETRATIONS THROUGH FIRE AND SMOKE ASSEMBLIES AS INDICATED IN LIFE SAFETY PLAN AND PARTITION TYPES. PROVIDE DAMPERS, SEALS AND ALL OTHER APPURTENANCES AS NECESSARY TO ENSURE FIRE RATING COMPLIANCE OF PENETRATIONS.
C. ALL ASSEMBLIES AND PENETRATIONS TO BE COORDINATED WITH RATING INDICATED IN CODE ANALYSIS/LIFE SAFETY PLANS. CONTRACTOR TO PROVIDE UL RATED ASSEMBLIES AS REQUIRED. CONTRACTOR TO PROVED UL RATINGS IN SUBMITTALS FOR ALL PENETRATIONS AS REQUIRED.

KEYED NOTES

03 3000.A1	CONCRETE SLAB
03 3000.A6	GYPCRETE TOPPING, SEE STRUCTURAL
03 3000.B1	CONCRETE FOOTING
03 3000.B2	CONCRETE STEM WALL
03 4500.A4	PRE-CAST CONCRETE CAP
04 2000.A4	8X8X16 CMU
04 2616.A1	ADHERED MASONRY VENEER
05 7000.A1	DECORATIVE METAL PANEL
06 1000.C4	3/4" TREATED PLYWOOD SHEATHING
06 1000.D1	OSB SHEATHING
06 1000.K2	WOOD BEAM
06 1000.K3	ROUGH SAWN WOOD BEAM
06 1000.K4	WOOD STUD FRAMING, SEE STRUCTURAL
07 2100.A1	BATT INSULATION
07 2100.F1	RIGID INSULATION BOARD
07 2400.A1	EXTERIOR INSULATION AND FINISH SYSTEM
07 2400.B1	EIFS INSULATION BOARD
07 5400.A1	TPO ROOF MEMBRANE
07 5400.D3	TAPERED INSULATION CRICKETS
08 4313.A1	ALUMINUM FRAMED STOREFRONT
08 5113.A3	ALUMINUM WINDOW
09 2116.A2	5/8" GYPSUM BOARD
09 2116.E1	GYPSUM CEILING BOARD
09 2116.F1	1/2" GLASS-MAT FACED GYPSUM SHEATHING BOARD
09 2216.C1	FURRING CHANNEL
09 5426.A2	SUSPENDED WOOD CEILING SYSTEM
32 1300.A1	CONCRETE SIDEWALK
32 1300.E2	CONCRETE CURB

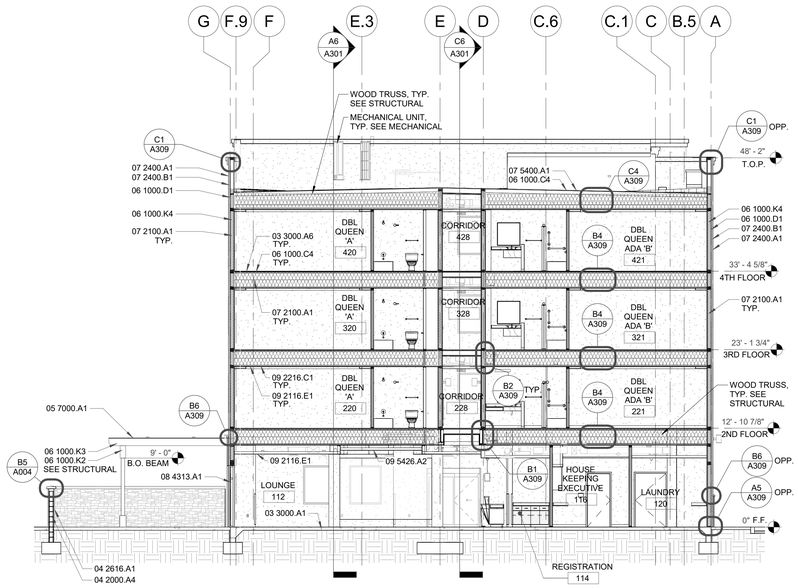

C3 **BUILDING SECTION E**
1/8" = 1'-0"

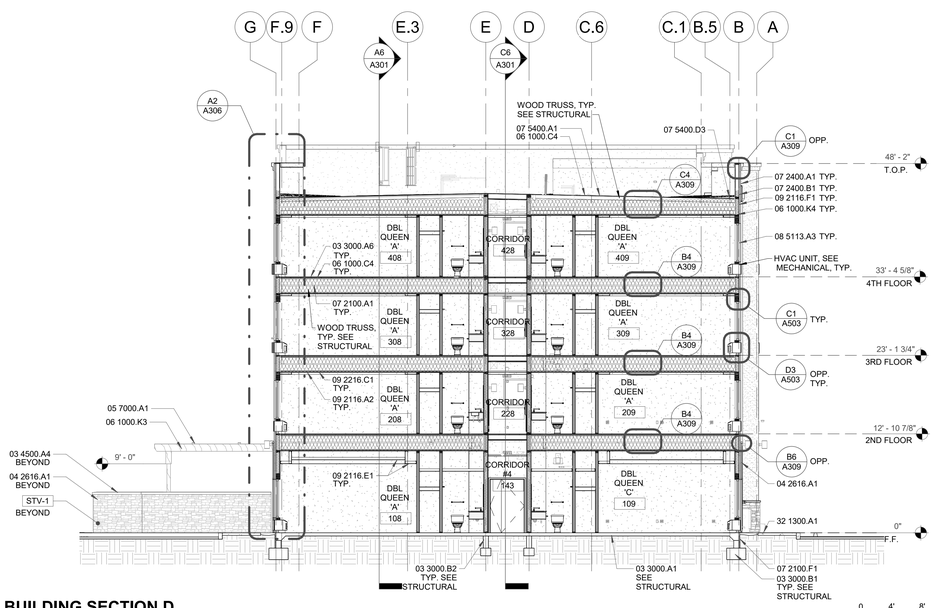

A6 **BUILDING SECTION D**
1/8" = 1'-0"

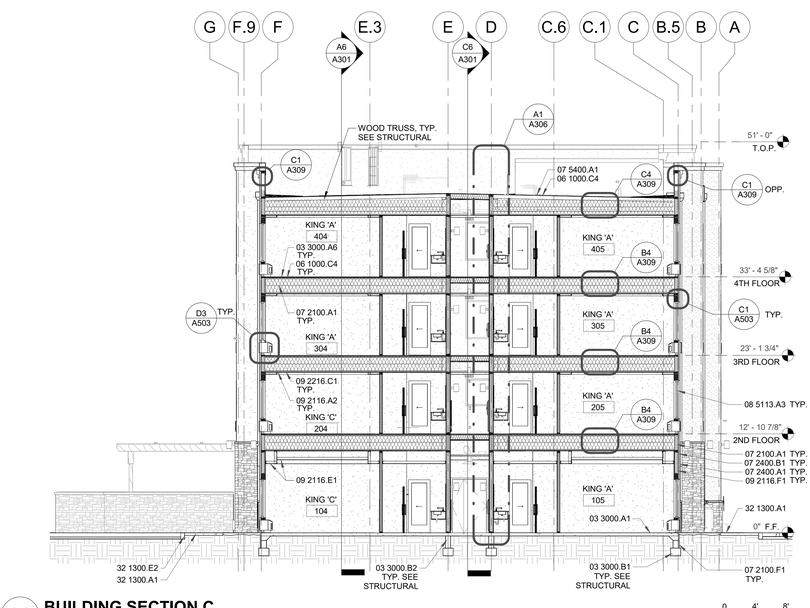

A3 **BUILDING SECTION C**
1/8" = 1'-0"

STAMP

STATE OF NEW MEXICO
DYRON V. MURPHY
No. 3713
REGISTERED ARCHITECT
11/3/2023

DYRON MURPHY ARCHITECTS, P.C.

4505 Montbel Place NE, Albuquerque, New Mexico 87107

SHIPROCK PINNACLE HOTEL & RESTAURANT

SHIPROCK, NEW MEXICO

100% CONSTRUCTION DOCUMENTS

ISSUED FOR CONSTRUCTION

NOVEMBER 3, 2023

PROJECT NUMBER	DRAWN BY	PROJ MGR
2022.10	DF	DM

BUILDING SECTIONS - HOTEL

Sheet Title

Sheet Number of

A302

11/6/2023 6:20:29 AM C:\Revit Local\Shiprock Pinnacle_Hotel_dfridbusch_dm-architects_com.rvt
DYRON MURPHY ARCHITECTS, P.C.

KEYED NOTES

04 2616.A1	ADHERED MASONRY VENEER
04 2616.B1	MORTAR SETTING BED
06 1000.K2	WOOD BEAM
07 6200.E2	SNAP ON METAL FACIA
09 2116.E2	CEMENT BOARD
09 5433.A1	ENGINEERED POLYMER CEILING STRIPS

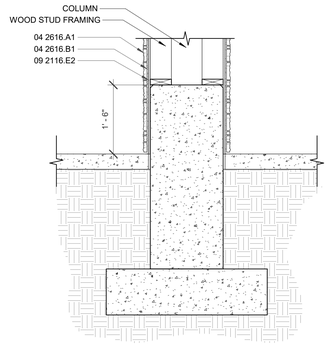

D1 **COLUMN BASE SECTION**
3/4" = 1'-0"

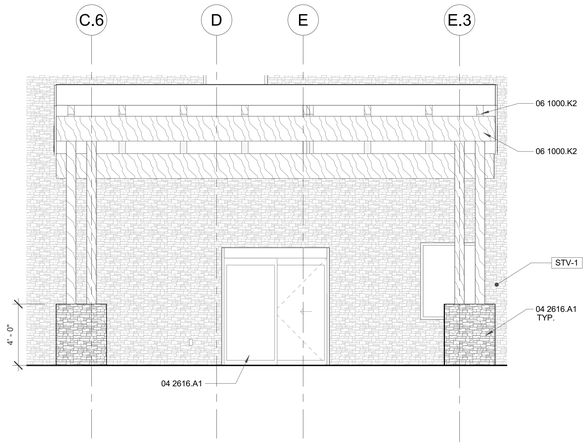

C5 **PORTE COCHOERE - EAST ELEVATION**
1/4" = 1'-0"

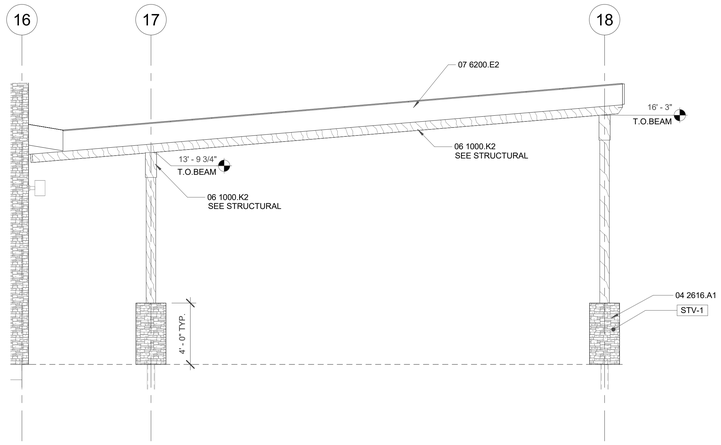

C3 **PORTE COCHERE - SOUTH ELEVATION**
1/4" = 1'-0"

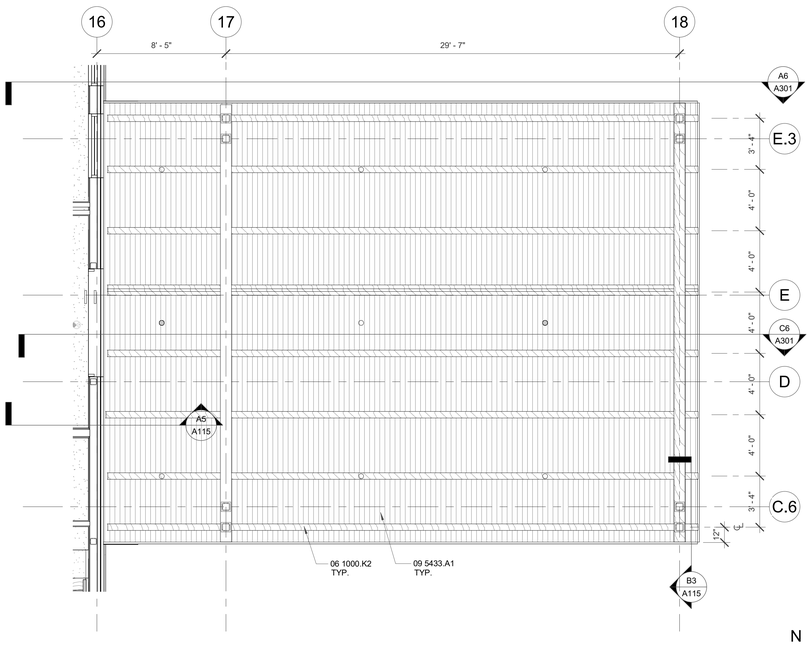

A5 **PORTE COCHERE - REFLECTED CEILING PLAN**
1/4" = 1'-0"

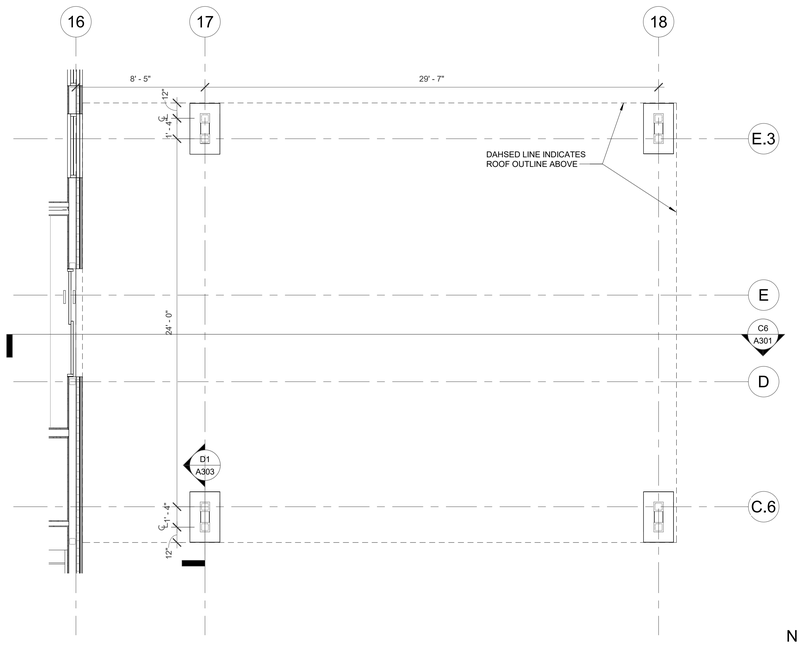

A3 **PORTE COCHERE - FLOOR PLAN**
1/4" = 1'-0"

STAMP

DYRON MURPHY ARCHITECTS, P.C.

4505 Montbel Place NE, Albuquerque, New Mexico 87107

SHIPROCK PINNACLE HOTEL & RESTAURANT

SHIPROCK, NEW MEXICO

100% CONSTRUCTION DOCUMENTS

ISSUED FOR CONSTRUCTION

NOVEMBER 3, 2023

PROJECT NUMBER	DRAWN BY	PROJ MGR
2022.10	Author	Designer

BUILDING SECTIONS - HOTEL - PORTE COCHÈRE

Sheet Title

Sheet Number of

A303

DYRON MURPHY ARCHITECTS, P.C.

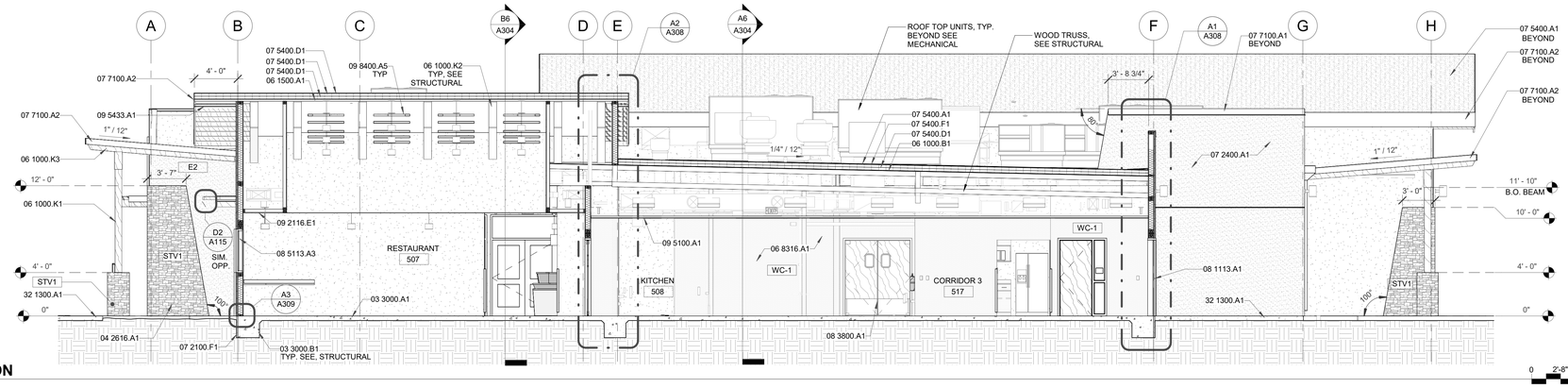

D6 BUILDING SECTION
3/16" = 1'-0"

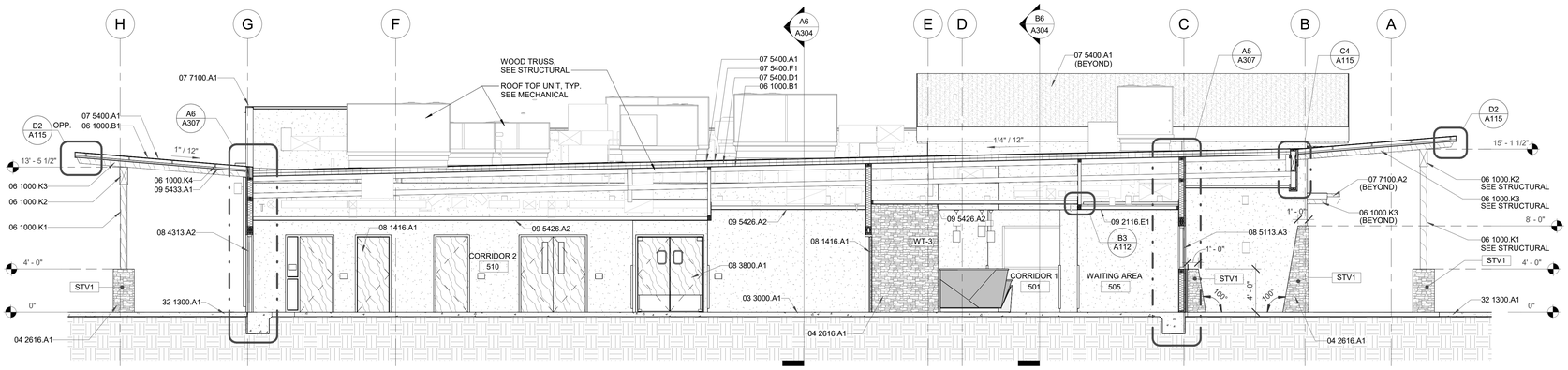

C6 BUILDING SECTION
3/16" = 1'-0"

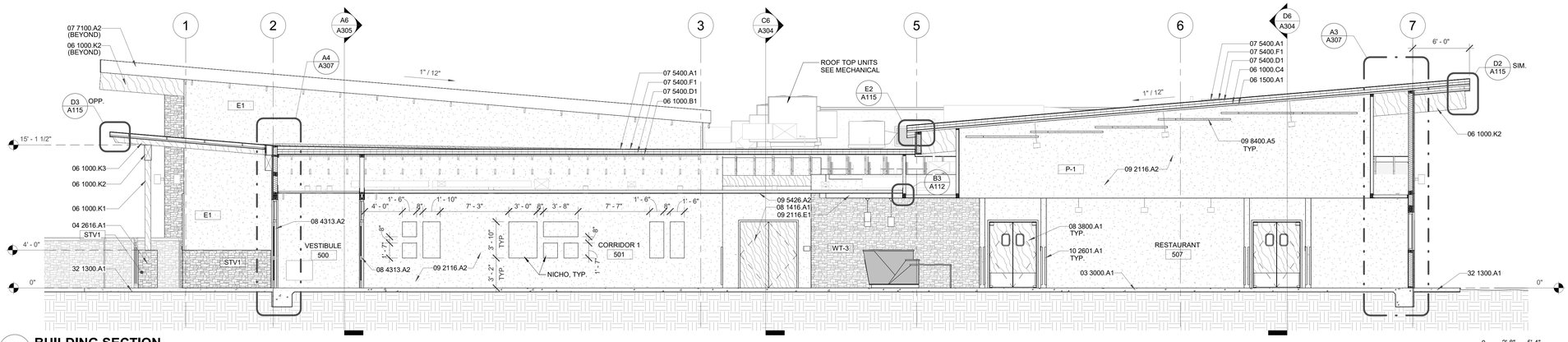

B6 BUILDING SECTION
3/16" = 1'-0"

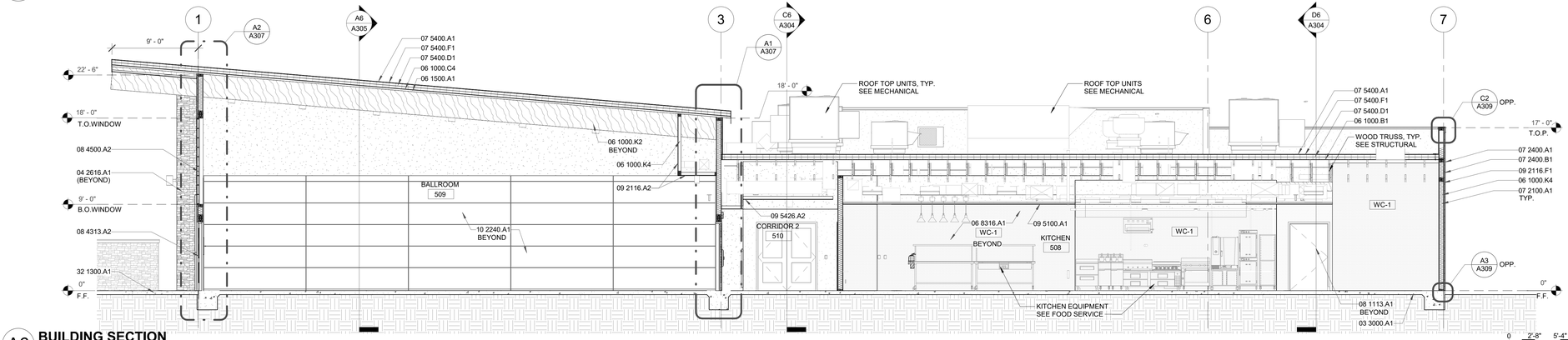

A6 BUILDING SECTION
3/16" = 1'-0"

GENERAL NOTES

A. ALL EXPOSED STRUCTURAL STEEL SHALL BE PRIMED AND PAINTED.
B. COORDINATE ALL PENETRATIONS THROUGH FIRE AND SMOKE ASSEMBLIES AS INDICATED IN LIFE SAFETY PLAN AND PARTITION TYPES. PROVIDE DAMPERS, SEALS AND ALL OTHER APPURTENANCES AS NECESSARY TO ENSURE FIRE RATING COMPLIANCE OF PENETRATIONS.
C. ALL ASSEMBLIES AND PENETRATIONS TO BE COORDINATED WITH RATING INDICATED IN CODE ANALYSIS/LIFE SAFETY PLANS. CONTRACTOR TO PROVIDE UL RATED ASSEMBLIES AS REQUIRED. CONTRACTOR TO PROVED UL RATINGS IN SUBMITTALS FOR ALL PENETRATIONS AS REQUIRED.

KEYED NOTES

03 3000.A1	CONCRETE SLAB
03 3000.B1	CONCRETE FOOTING
04 2616.A1	ADHERED MASONRY VENEER
06 1000.B1	PLYWOOD SHEATHING
06 1000.C4	3/4" TREATED PLYWOOD SHEATHING
06 1000.K1	WOOD COLUMN
06 1000.K2	WOOD BEAM
06 1000.K3	ROUGH SAWN WOOD BEAM
06 1000.K4	WOOD STUD FRAMING, SEE STRUCTURAL
06 1500.A1	T&G ROOF DECK
06 8316.A1	FIBER REINFORCED PLASTIC WALL COVERING
07 2100.A1	BATT INSULATION
07 2100.F1	RIGID INSULATION BOARD
07 2400.A1	EXTERIOR INSULATION AND FINISH SYSTEM
07 2400.B1	EIFS INSULATION BOARD
07 5400.A1	TPO ROOF MEMBRANE
07 5400.D1	RIGID ROOF INSULATION
07 5400.F1	1/2" GLASS MAT FACED GYPSUM ROOF BOARD
07 7100.A1	PRE-FINISHED METAL PARAPET COPING
07 7100.A2	METAL EDGE FLASHING
08 1113.A1	HOLLOW METAL DOOR AND FRAME
08 1416.A1	FLUSH WOOD DOOR
08 3800.A1	TRAFFIC DOOR
08 4313.A2	ALUMINUM FRAMED STOREFRONT DOOR
08 4500.A2	TRANSLUCENT WINDOW PANEL
08 5113.A3	ALUMINUM WINDOW
09 2116.A2	5/8" GYPSUM BOARD
09 2116.E1	GYPSUM CEILING BOARD
09 2116.F1	1/2" GLASS-MAT FACED GYPSUM SHEATHING BOARD
09 5100.A1	SUSPENDED ACOUSTICAL CEILING TILE SYSTEM
09 5426.A2	SUSPENDED WOOD CEILING SYSTEM
09 5433.A1	ENGINEERED POLYMER CEILING STRIPS
09 8400.A5	SUSPENDED ACOUSTICAL CLOUD
10 2240.A1	AUTOMATIC VERTICALLY RETRACTABLE ACOUSTICAL WALL
10 2601.A1	CORNER GUARD
32 1300.A1	CONCRETE SIDEWALK

STAMP

STATE OF NEW MEXICO
DYRON V. MURPHY
No. 3713
11/3/2023
REGISTERED ARCHITECT

DYRON MURPHY ARCHITECTS, P.C.

4505 Montbel Place NE, Albuquerque, New Mexico 87107

SHIPROCK PINNACLE HOTEL & RESTAURANT

SHIPROCK, NEW MEXICO

100% CONSTRUCTION DOCUMENTS

ISSUED FOR CONSTRUCTION

NOVEMBER 3, 2023

PROJECT NUMBER	DRAWN BY	PROJ MGR
2022.10	Author	Designer

BUILDING SECTIONS - RESTAURANT

Sheet Title

Sheet Number A304 of

11/3/2023 5:18:13 PM C:\Revit Local\Shiprock Pinnacle_Restaurant_dkb3tuch_dm-architects_cpm.rvt
DYRON MURPHY ARCHITECTS, P.C.

GENERAL NOTES

A. ALL EXPOSED STRUCTURAL STEEL SHALL BE PRIMED AND PAINTED.
B. COORDINATE ALL PENETRATIONS THROUGH FIRE AND SMOKE ASSEMBLIES AS INDICATED IN LIFE SAFETY PLAN AND PARTITION TYPES. PROVIDE DAMPERS, SEALS AND ALL OTHER APPURTENANCES AS NECESSARY TO ENSURE FIRE RATING COMPLIANCE OF PENETRATIONS.
C. ALL ASSEMBLIES AND PENETRATIONS TO BE COORDINATED WITH RATING INDICATED IN CODE ANALYSIS/LIFE SAFETY PLANS. CONTRACTOR TO PROVIDE UL RATED ASSEMBLIES AS REQUIRED. CONTRACTOR TO PROVED UL RATINGS IN SUBMITTALS FOR ALL PENETRATIONS AS REQUIRED.

KEYED NOTES

03 3000.A1	CONCRETE SLAB
03 3000.B1	CONCRETE FOOTING
04 2616.A1	ADHERED MASONRY VENEER
06 1000.B1	PLYWOOD SHEATHING
06 1000.K1	WOOD COLUMN
06 1000.K2	WOOD BEAM
06 1000.K4	WOOD STUD FRAMING, SEE STRUCTURAL
06 1500.A1	T&G ROOF DECK
07 2100.A1	BATT INSULATION
07 2100.F1	RIGID INSULATION BOARD
07 2400.A1	EXTERIOR INSULATION AND FINISH SYSTEM
07 2400.B1	EIFS INSULATION BOARD
07 5400.A1	TPO ROOF MEMBRANE
07 5400.D1	RIGID ROOF INSULATION
07 5400.F1	1/2" GLASS MAT FACED GYPSUM ROOF BOARD
08 1113.A1	HOLLOW METAL DOOR AND FRAME
09 2116.E1	GYPSUM CEILING BOARD
09 2116.F1	1/2" GLASS-MAT FACED GYPSUM SHEATHING BOARD
09 5100.A1	SUSPENDED ACOUSTICAL CEILING TILE SYSTEM
09 5426.A2	SUSPENDED WOOD CEILING SYSTEM
09 5433.A1	ENGINEERED POLYMER CEILING STRIPS
09 8400.A5	SUSPENDED ACOUSTICAL CLOUD
10 2240.A1	AUTOMATIC VERTICALLY RETRACTABLE ACOUSTICAL WALL
11 5213.A3	MOTORIZED PROJECTION SCREEN
11 5216.A1	PROJECTOR
32 1300.A1	CONCRETE SIDEWALK

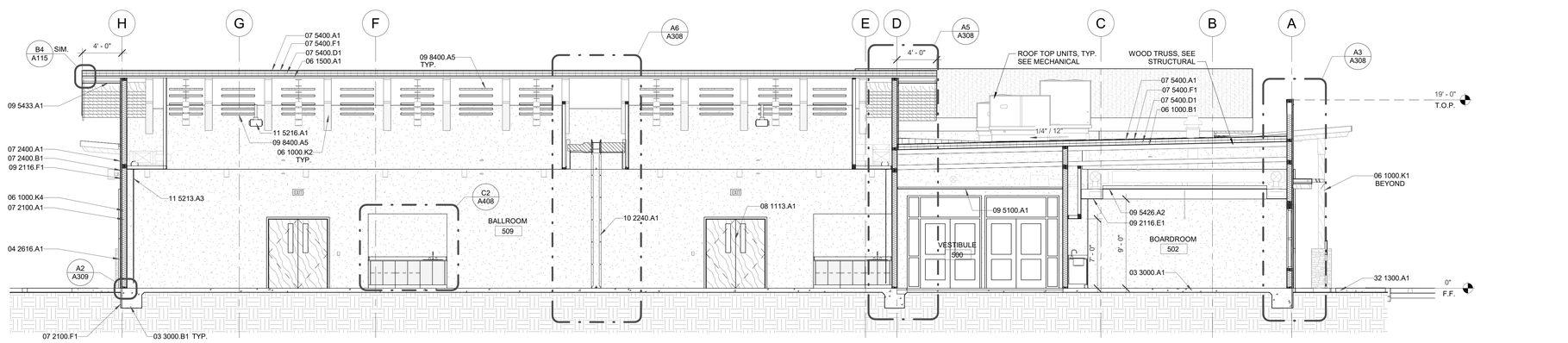

A6 **BUILDING SECTION**
3/16" = 1'-0"

0 2'-8" 5'-4" 10'-8"

STAMP

STATE OF NEW MEXICO
DYRON V. MURPHY
No. 3713
11/3/2023
REGISTERED ARCHITECT

DYRON MURPHY ARCHITECTS, P.C.

4505 Montbel Place NE, Albuquerque, New Mexico 87107

SHIPROCK PINNACLE HOTEL & RESTAURANT

SHIPROCK, NEW MEXICO

100% CONSTRUCTION DOCUMENTS

ISSUED FOR CONSTRUCTION

NOVEMBER 3, 2023

PROJECT NUMBER	DRAWN BY	PROJ MGR
2022.10	Author	Designer

BUILDING SECTIONS - RESTAURANT

Sheet Title

Sheet Number of

A305

11/3/2023 5:20:22 PM C:\Revit Local\Shiprock Pinnacle_Restaurant_dleybouch_dm-architects_com.rvt

DYRON MURPHY ARCHITECTS, P.C.

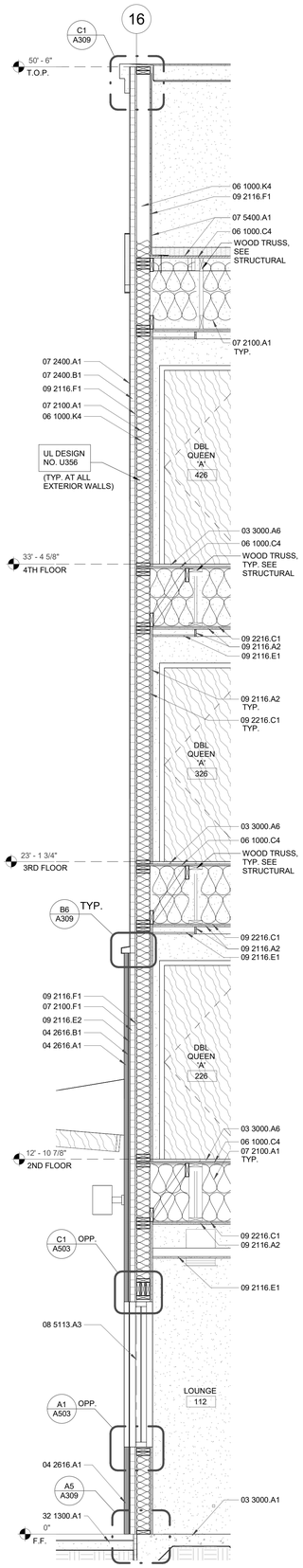

A5 **WALL SECTIONS**
1/2" = 1'-0"

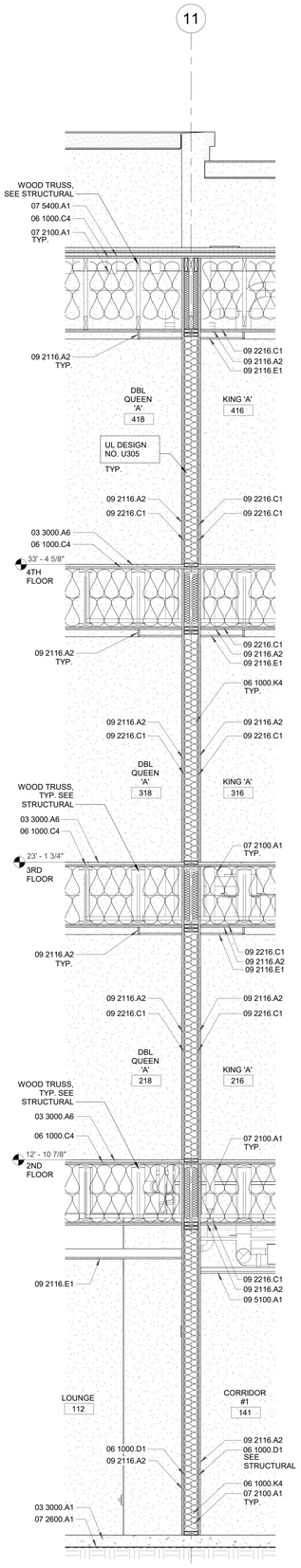

A4 **WALL SECTIONS**
1/2" = 1'-0"

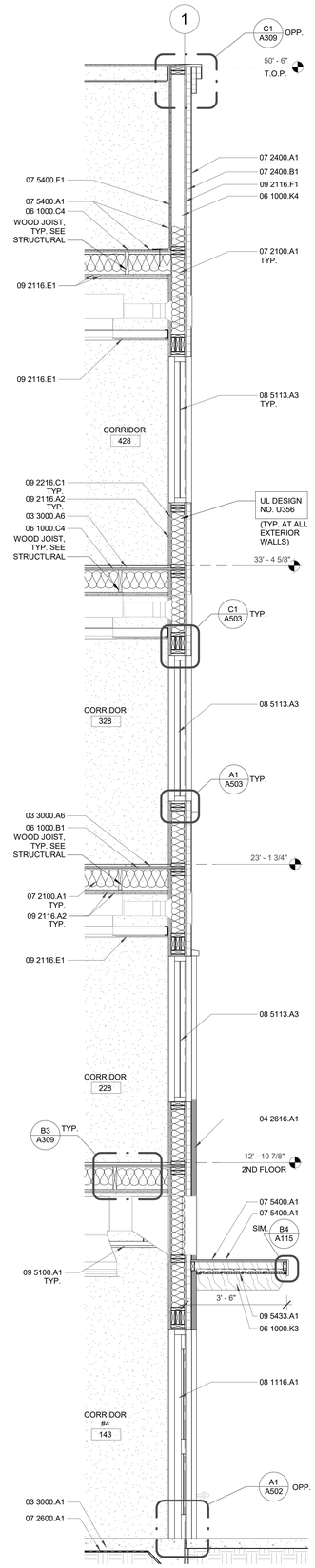

A3 **WALL SECTIONS**
1/2" = 1'-0"

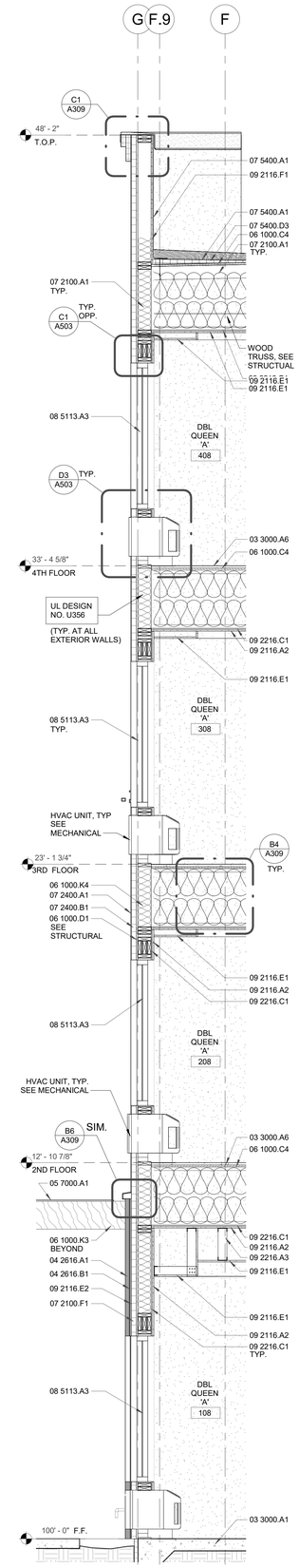

A2 **WALL SECTIONS**
1/2" = 1'-0"

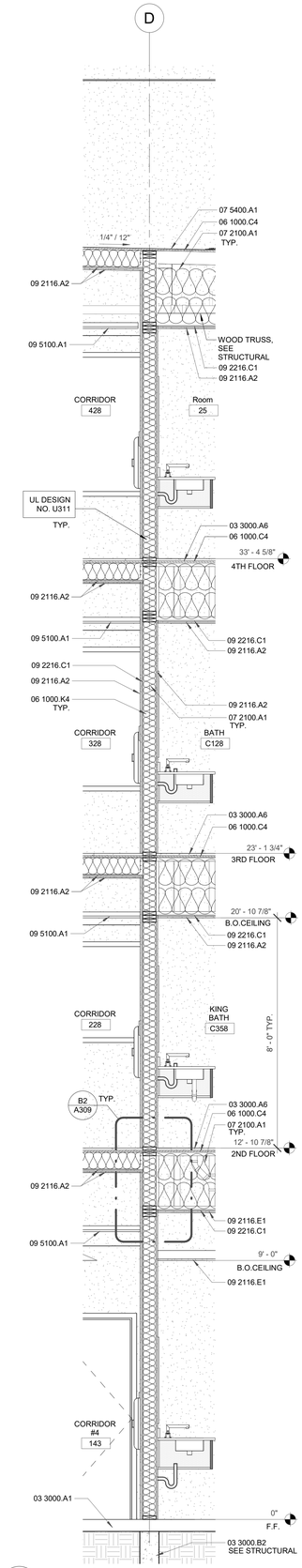

A1 **WALL SECTIONS**
1/2" = 1'-0"

KEYED NOTES

03 3000.A1	CONCRETE SLAB
03 3000.A6	GYPCRETE TOPPING, SEE STRUCTURAL
03 3000.B2	CONCRETE STEM WALL
04 2616.A1	ADHERED MASONRY VENEER
04 2616.B1	MORTAR SETTING BED
05 7000.A1	DECORATIVE METAL PANEL
06 1000.B1	PLYWOOD SHEATHING
06 1000.C4	3/4" TREATED PLYWOOD SHEATHING
06 1000.D1	OSB SHEATHING
06 1000.K3	ROUGH SAWN WOOD BEAM
06 1000.K4	WOOD STUD FRAMING, SEE STRUCTURAL
07 2100.A1	BATT INSULATION
07 2100.F1	RIGID INSULATION BOARD
07 2400.A1	EXTERIOR INSULATION AND FINISH SYSTEM
07 2400.B1	EIFS INSULATION BOARD
07 2600.A1	UNDER SLAB VAPOR BARRIER
07 5400.A1	TPO ROOF MEMBRANE
07 5400.D3	TAPERED INSULATION CRICKETS
07 5400.F1	1/2" GLASS MAT FACED GYPSUM ROOF BOARD
08 1116.A1	ALUMINUM FRAME AND DOOR
08 5113.A3	ALUMINUM WINDOW
09 2116.A2	5/8" GYPSUM BOARD
09 2116.E1	GYPSUM CEILING BOARD
09 2116.E2	CEMENT BOARD
09 2116.F1	1/2" GLASS-MAT FACED GYPSUM SHEATHING BOARD
09 2216.A3	METAL STUD
09 2216.C1	FURRING CHANNEL
09 5100.A1	SUSPENDED ACOUSTICAL CEILING TILE SYSTEM
09 5433.A1	ENGINEERED POLYMER CEILING STRIPS
32 1300.A1	CONCRETE SIDEWALK

STAMP

STATE OF NEW MEXICO
DYRON V. MURPHY
No. 3713
REGISTERED ARCHITECT
11/3/2023

DYRON MURPHY ARCHITECTS, P.C.

4505 Montbel Place NE, Albuquerque, New Mexico 87107

SHIPROCK PINNACLE HOTEL & RESTAURANT

SHIPROCK, NEW MEXICO

100% CONSTRUCTION DOCUMENTS

ISSUED FOR CONSTRUCTION

NOVEMBER 3, 2023

PROJECT NUMBER	DRAWN BY	PROJ MGR
2022.10	DF/EH	DM

WALL SECTIONS - HOTEL

Sheet Title

Sheet Number

A306

of

11/6/2023 8:30:09 AM C:\Revit Local\Shiprock Pinnacle_Hotel_dfe8bxxh_dm-architects_cam.rvt
DYRON MURPHY ARCHITECTS, P.C.

KEYED NOTES

03 3000.A1	CONCRETE SLAB
03 3000.B1	CONCRETE FOOTING
04 2616.A1	ADHERED MASONRY VENEER
04 2616.B1	MORTAR SETTING BED
05 4000.A7	FURRING CHANNEL
06 1000.B1	PLYWOOD SHEATHING
06 1000.K2	WOOD BEAM
06 1000.K3	ROUGH SAWN WOOD BEAM
06 1000.K4	WOOD STUD FRAMING, SEE STRUCTURAL
06 1500.A1	T&G ROOF DECK
07 2100.A1	BATT INSULATION
07 2100.F1	RIGID INSULATION BOARD
07 2400.A1	EXTERIOR INSULATION AND FINISH SYSTEM
07 2400.B1	EIFS INSULATION BOARD
07 2600.A1	UNDER SLAB VAPOR BARRIER
07 5400.A1	TPO ROOF MEMBRANE
07 5400.D1	RIGID ROOF INSULATION
07 5400.D3	TAPERED INSULATION CRICKETS
07 5400.F1	1/2" GLASS MAT FACED GYPSUM ROOF BOARD
07 5419.A1	PVC ROOF MEMBRANE
08 1416.A1	FLUSH WOOD DOOR
08 4313.A2	ALUMINUM FRAMED STOREFRONT DOOR
08 4500.A2	TRANSLUCENT WINDOW PANEL
08 5113.A3	ALUMINUM WINDOW
09 2116.A2	5/8" GYPSUM BOARD
09 2116.E1	GYPSUM CEILING BOARD
09 2116.E2	CEMENT BOARD
09 2116.F1	1/2" GLASS-MAT FACED GYPSUM SHEATHING BOARD
09 5100.A1	SUSPENDED ACOUSTICAL CEILING TILE SYSTEM
09 5426.A2	SUSPENDED WOOD CEILING SYSTEM
09 5433.A1	ENGINEERED POLYMER CEILING STRIPS
10 2240.A1	AUTOMATIC VERTICALLY RETRACTABLE ACOUSTICAL WALL
32 1300.A1	CONCRETE SIDEWALK

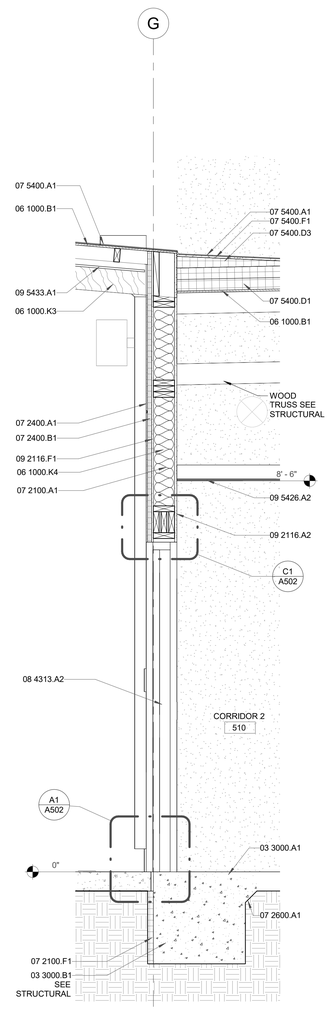

A6 **WALL SECTION**
3/4" = 1'-0"

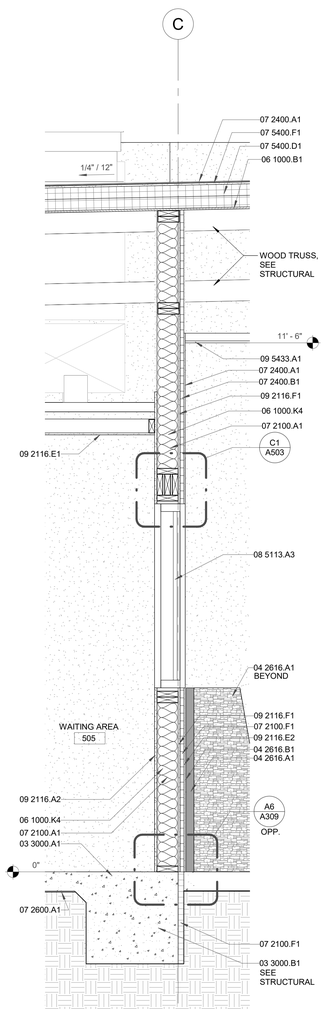

A5 **WALL SECTION**
3/4" = 1'-0"

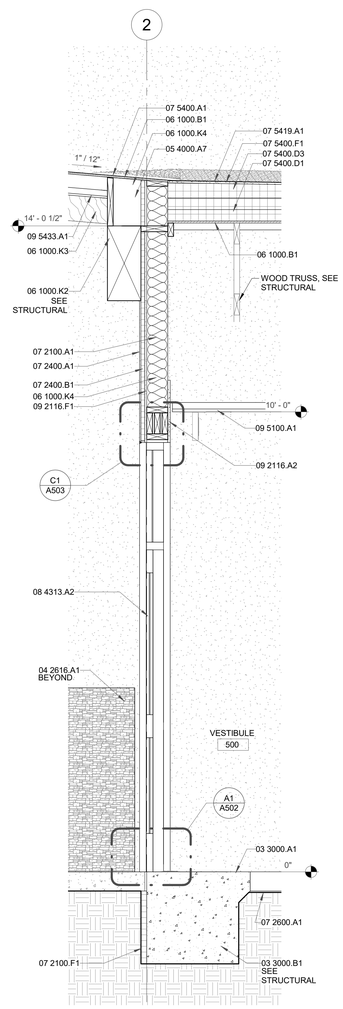

A4 **WALL SECTION**
3/4" = 1'-0"

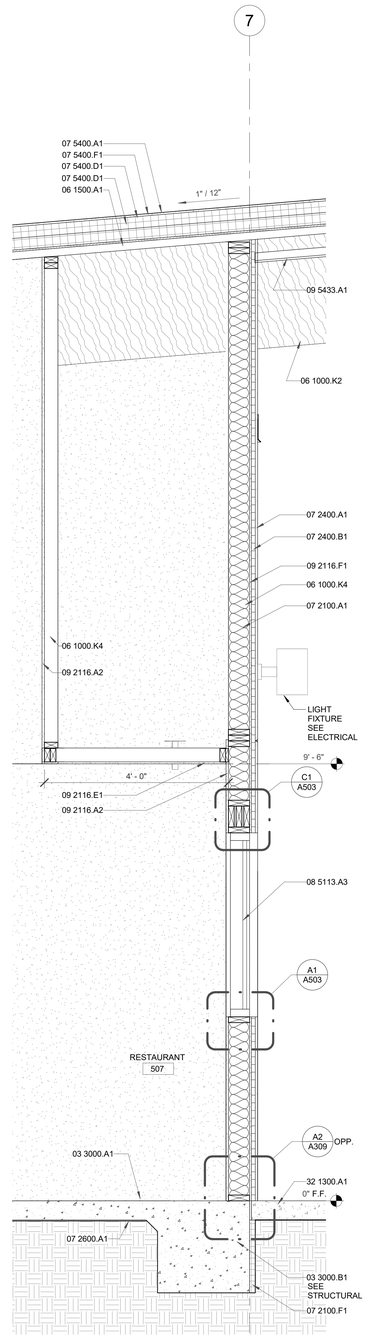

A3 **WALL SECTION**
3/4" = 1'-0"

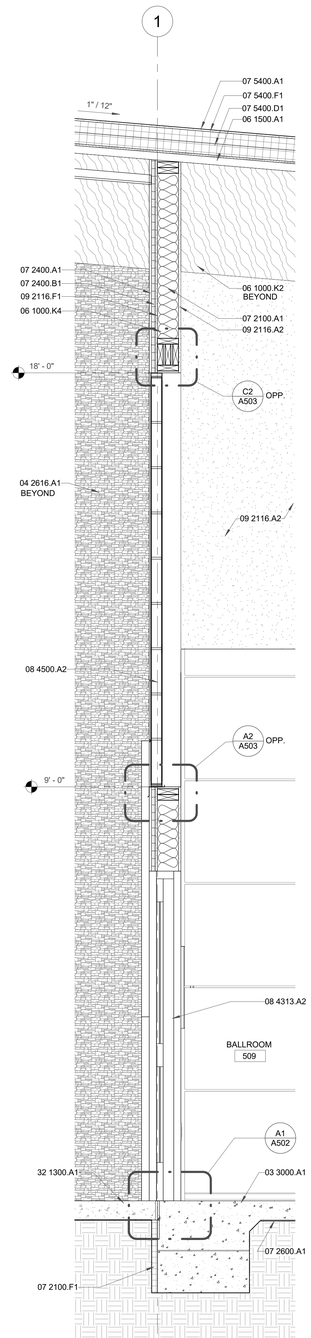

A2 **WALL SECTION**
3/4" = 1'-0"

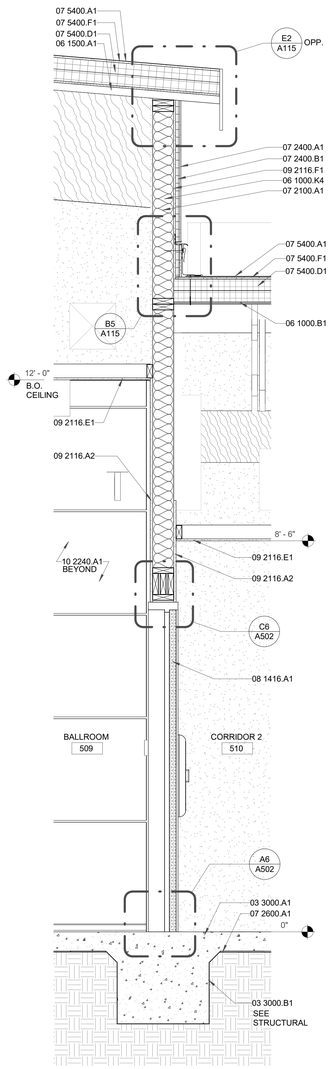

A1 **WALL SECTION**
3/4" = 1'-0"

STAMP

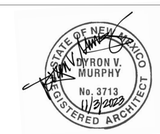

DYRON MURPHY ARCHITECTS, P.C.

4505 Montbel Place NE, Albuquerque, New Mexico 87107

SHIPROCK PINNACLE HOTEL & RESTAURANT

SHIPROCK, NEW MEXICO

100% CONSTRUCTION DOCUMENTS

ISSUED FOR CONSTRUCTION

NOVEMBER 3, 2023

PROJECT NUMBER	DRAWN BY	PROJ MGR
2022.10	Author	Designer

WALL SECTIONS - RESTAURANT

Sheet Title

Sheet Number of

A307

C:\Revit Local\Shiprock Pinnacle_Restaurant_dkelbaugh_dm-architects_cen.rvt
11/2/2023 4:29:34 PM
DYRON MURPHY ARCHITECTS, P.C.

KEYED NOTES

03 3000.A1	CONCRETE SLAB
03 3000.B1	CONCRETE FOOTING
06 1000.B1	PLYWOOD SHEATHING
06 1000.K2	WOOD BEAM
06 1000.K3	ROUGH SAWN WOOD BEAM
06 1000.K4	WOOD STUD FRAMING, SEE STRUCTURAL
06 1500.A1	T&G ROOF DECK
07 2100.A1	BATT INSULATION
07 2100.F1	RIGID INSULATION BOARD
07 2400.A1	EXTERIOR INSULATION AND FINISH SYSTEM
07 2400.B1	EIFS INSULATION BOARD
07 2600.A1	UNDER SLAB VAPOR BARRIER
07 5400.A1	TPO ROOF MEMBRANE
07 5400.D1	RIGID ROOF INSULATION
07 5400.D3	TAPERED INSULATION CRICKETS
07 5400.F1	1/2" GLASS MAT FACED GYPSUM ROOF BOARD
08 1113.A1	HOLLOW METAL DOOR AND FRAME
08 3800.A1	TRAFFIC DOOR
08 5113.A3	ALUMINUM WINDOW
09 2116.A2	5/8" GYPSUM BOARD
09 2116.E1	GYPSUM CEILING BOARD
09 2116.F1	1/2" GLASS-MAT FACED GYPSUM SHEATHING BOARD
09 5100.A1	SUSPENDED ACOUSTICAL CEILING TILE SYSTEM
09 5433.A1	ENGINEERED POLYMER CEILING STRIPS
10 2240.A1	AUTOMATIC VERTICALLY RETRACTABLE ACOUSTICAL WALL
11 5213.A3	MOTORIZED PROJECTION SCREEN

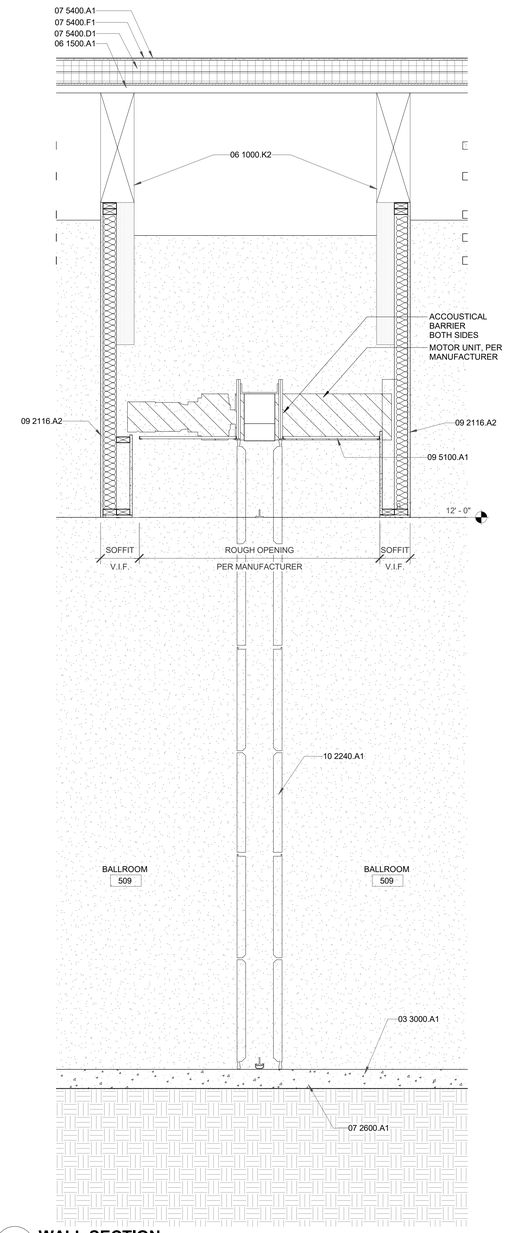

A6 **WALL SECTION**
3/4" = 1'-0"

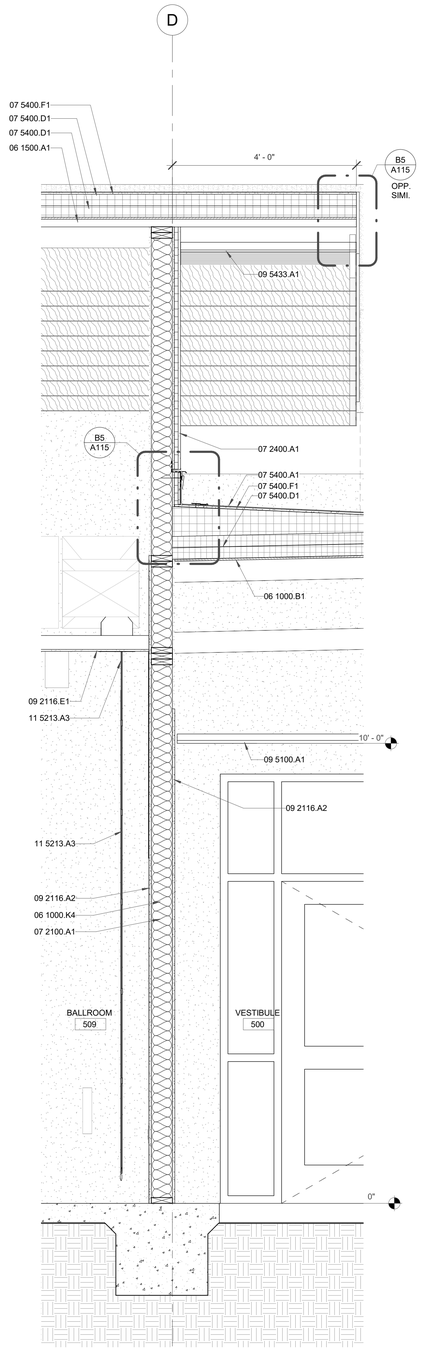

A5 **WALL SECTION**
3/4" = 1'-0"

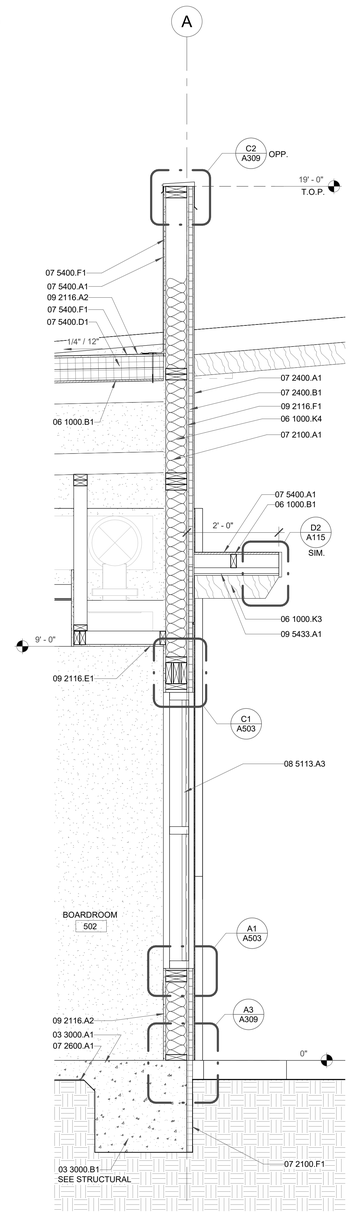

A3 **WALL SECTION**
3/4" = 1'-0"

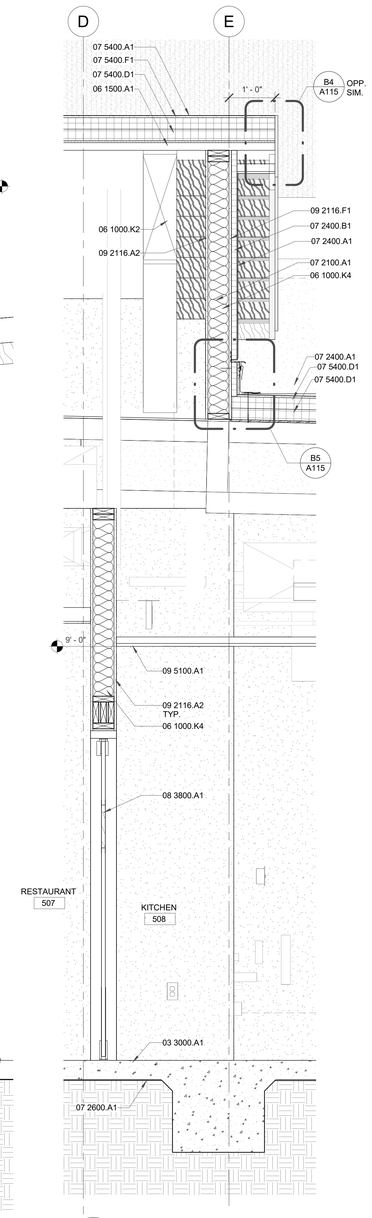

A2 **WALL SECTION**
3/4" = 1'-0"

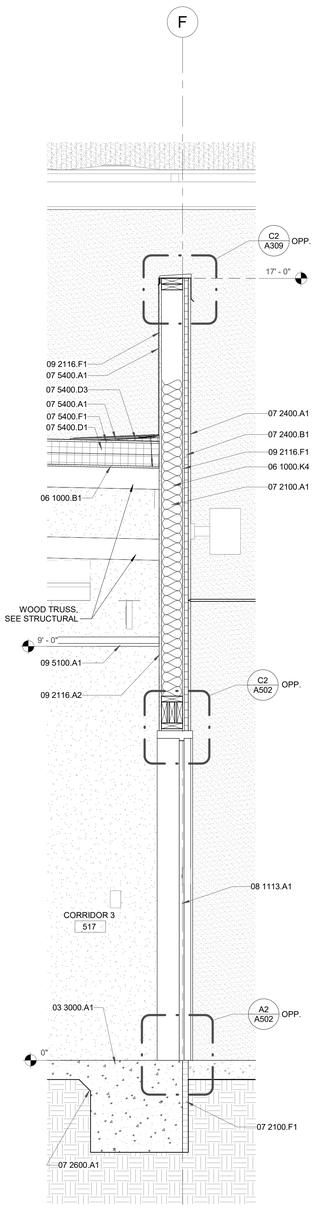

A1 **WALL SECTION**
3/4" = 1'-0"

STAMP

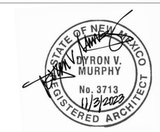

DYRON MURPHY ARCHITECTS, P.C.

4505 Montbel Place NE, Albuquerque, New Mexico 87107

SHIPROCK PINNACLE HOTEL & RESTAURANT

SHIPROCK, NEW MEXICO

100% CONSTRUCTION DOCUMENTS

ISSUED FOR CONSTRUCTION

NOVEMBER 3, 2023

PROJECT NUMBER	DRAWN BY	PROJ MGR
2022.10	Author	Designer

WALL SECTIONS - RESTAURANT

Sheet Title

Sheet Number of

A308

11/3/2023 4:36:41 PM C:\Revit Local\Shiprock Pinnacle_Restaurant_dkiebusch_dm-architects_cam.rvt
DYRON MURPHY ARCHITECTS, P.C.

KEYED NOTES

03 3000.A1	CONCRETE SLAB
03 3000.A6	GYPCRETE TOPPING, SEE STRUCTURAL
04 2616.A1	ADHERED MASONRY VENEER
04 2616.B1	MORTAR SETTING BED
04 2616.C1	METAL LATH
05 1200.A4	STEEL BEAM, SEE STRUCTURAL
06 1000.B1	PLYWOOD SHEATHING
06 1000.C4	3/4" TREATED PLYWOOD SHEATHING
06 1000.D1	OSB SHEATHING
06 1000.K4	WOOD STUD FRAMING, SEE STRUCTURAL
07 2100.A1	BATT INSULATION
07 2100.F1	RIGID INSULATION BOARD
07 2100.G1	FIBERGLASS SILL SEALER
07 2400.A1	EXTERIOR INSULATION AND FINISH SYSTEM
07 2400.B1	EIFS INSULATION BOARD
07 2400.B3	EIFS VENTED DRAINAGE TRACK
07 2500.A1	WEATHER BARRIER
07 5400.A1	TPO ROOF MEMBRANE
07 5400.A2	TPO ROOF MEMBRANE SYSTEM
07 5400.F1	1/2" GLASS MAT FACED GYPSUM ROOF BOARD
07 7100.A1	PRE-FINISHED METAL PARAPET COPING
07 9005.A2	SEALANT, CONTINUOUS
09 2116.A2	5/8" GYPSUM BOARD
09 2116.E2	CEMENT BOARD
09 2116.F1	1/2" GLASS-MAT FACED GYPSUM SHEATHING BOARD
09 2216.A3	METAL STUD
09 2216.C2	7/8" FURRING CHANNEL @ 16" O.C. OR AS REQUIRED
09 5100.A1	SUSPENDED ACOUSTICAL CEILING TILE SYSTEM
32 1300.A1	CONCRETE SIDEWALK
32 1300.B2	1/2" EXPANSION JOINT

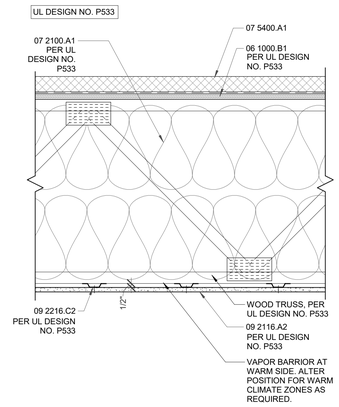

CALCULATED METHOD
FIRE RATING - 1 HOUR
STC RATING - MIN. 60

BASE LAYER 5/8" TYPE X GYPSUM WALLBOARD APPLIED AT RIGHT ANGLES TO WOOD JOISTS AS SPECIFIED ON PLANS (24" O.C. MAX PER TABLE) WITH 1 1/4" TYPE W OR S DRYWALL SCREWS AT 24" O.C. MAX.
FACE LAYER 5/8" TYPE X GYPSUM WALLBOARD OR GYPSUM VENEER BASE APPLIED AT RIGHT ANGLES TO JOISTS WITH 1 7/8" TYPE W OR S DRYWALL SCREWS 12" O.C. AT JOINTS AND INTERMEDIATE JOISTS AND 1 1/2" TYPE G DRYWALL SCREWS 12" O.C. PLACED 2" BACK ON EITHER SIDE OF END JOINTS. JOINTS OFFSET 24" FROM BASE LAYER JOINTS. WOOD JOISTS SUPPORTING 1/2" MIN. WOOD STRUCTURAL PANELS BONDED WITH EXTERIOR GLUE APPLIED AT RIGHT ANGLES TO JOISTS WITH 8D NAILS.

C4 1-HOUR ASSEMBLY (WOOD TRUSSES) CEILING / ROOF
1 1/2" = 1'-0"

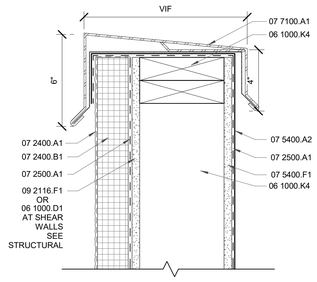

*NOTE : WRAP MEMBRANE A MINIMUM OF 4 INCHES ON OUTER SIDE OF SIDE OF PARAPET.

C2 PARAPET COPING - RESTAURANT
3" = 1'-0"

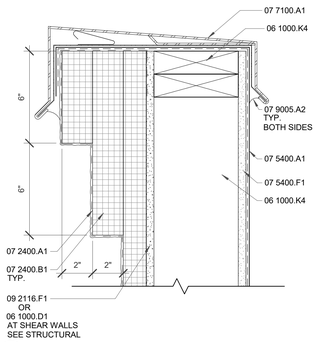

C1 PARAPET COPING - HOTEL
3" = 1'-0"

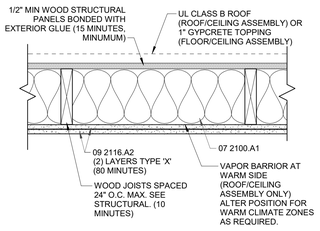

1-HOUR RATING - CALCULATED METHOD PER IBC

TABLE	DESCRIPTION	TIME ASSIGNED
721.1(3) #21	1/2"MIN WOOD STRUCTURAL PANEL BONDED WITH EXTERIOR WOOD GLUE (15 MINUTE MINIMUM REQUIRED AS UPPER MEMBRANE OF ASSEMBLY PER 721.6.2.4	15 MINUTES
721.1(3) #21	2 LAYERS 5/8" TYPE 'X' GYPSUM BOARD	40 MINUTES (PER LAYER)
721.1(3) #21	WOOD FLOOR OR ROOF JOISTS 24" O.C. MAX. (ALL JOISTS SHALL HAVE A NOMINAL THICKNESS OF AT LEAST 2 INCHES)	10 MINUTES

B3 1-HOUR ASSEMBLY (WOOD JOISTS) ROOF / CEILING & FLOOR / CEILING
1 1/2" = 1'-0"

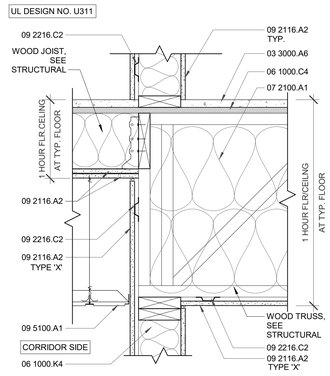

B2 1-HOUR ASSEMBLY - CORRIDOR WALL AT CEILING / FLOOR
1 1/2" = 1'-0"

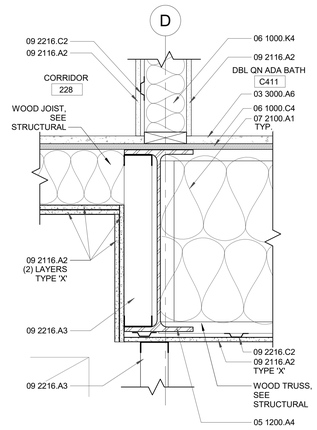

B1 CEILING / FLOOR AT STEEL BEAM
1 1/2" = 1'-0"

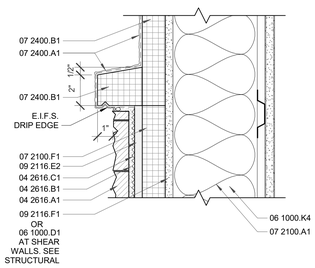

B6 E.I.F.S. BAND DETAIL ABOVE STONE
3" = 1'-0"

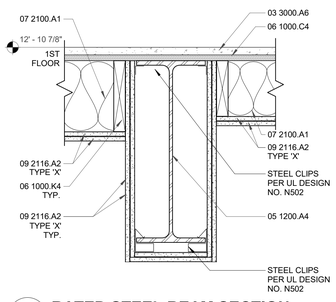

B5 RATED STEEL BEAM SECTION
1 1/2" = 1'-0"

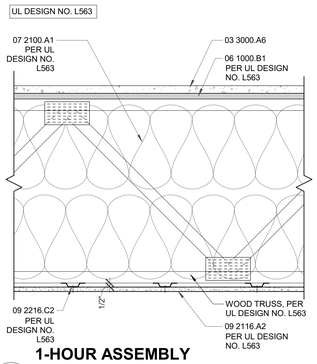

B4 1-HOUR ASSEMBLY (WOOD TRUSSES) CEILING / FLOOR
1 1/2" = 1'-0"

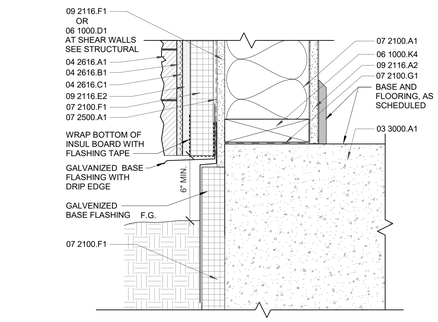

A6 STONE TERMINATION AT GRADE
3" = 1'-0"

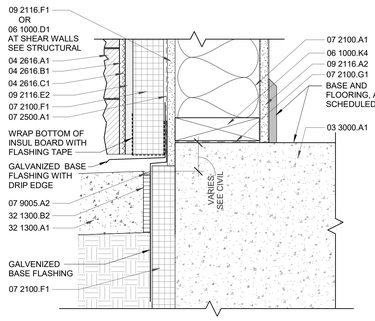

A5 STONE TERMINATION AT SIDEWALK
3" = 1'-0"

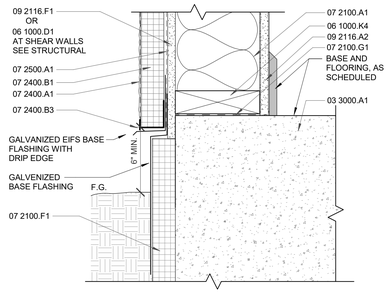

A3 E.I.F.S. TERMINATION AT GRADE
3" = 1'-0"

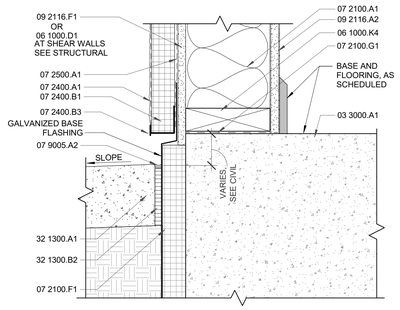

A2 E.I.F.S TERMINATION AT SIDEWALK
3" = 1'-0"

STAMP

STATE OF NEW MEXICO
DYRON V. MURPHY
No. 3713
11/3/2023
REGISTERED ARCHITECT

DYRON MURPHY ARCHITECTS, P.C.
4505 Montbel Place NE, Albuquerque, New Mexico 87107

SHIPROCK PINNACLE HOTEL & RESTAURANT

SHIPROCK, NEW MEXICO

100% CONSTRUCTION DOCUMENTS

ISSUED FOR CONSTRUCTION

NOVEMBER 3, 2023

PROJECT NUMBER	DRAWN BY	PROJ MGR
2022.10	DF	DM

SECTION DETAILS

Sheet Title

Sheet Number

A309

of

11/6/2023 8:00:08 AM C:\Revit Local\Shiprock Pinnacle_Hotel_dfedtuvch_dmarchitects_com.rvt
DYRON MURPHY ARCHITECTS, P.C.

KEYED NOTES

05 1200.A1	STEEL COLUMN, SEE STRUCTURAL
06 0660.A1	TRANSLUCENT PANEL
06 1000.D1	OSB SHEATHING
06 1000.K4	WOOD STUD FRAMING, SEE STRUCTURAL
09 2116.A2	5/8" GYPSUM BOARD
09 2216.C1	FURRING CHANNEL

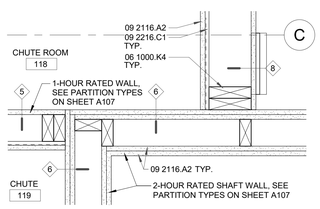

PLAN DETAIL
A5 1ST FLOOR LINEN CHUTE
1 1/2" = 1'-0"

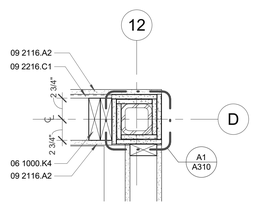

A4 PLAN DETAIL - GRIDS '12' & 'D'
1 1/2" = 1'-0"

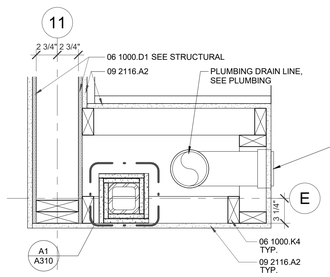

A3 PLAN DETAIL - GRIDS '11' & 'E'
1 1/2" = 1'-0"

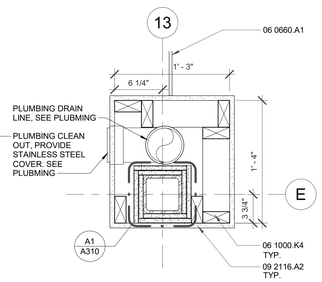

A2 PLAN DETAIL - GRIDS '13' & 'E'
1 1/2" = 1'-0"

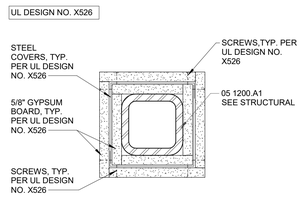

A1 RATED STEEL COLUMN
3" = 1'-0"

STAMP

STATE OF NEW MEXICO
DYRON V. MURPHY
No. 3713
11/3/2023
REGISTERED ARCHITECT

DYRON MURPHY ARCHITECTS, P.C.
4505 Montbel Place NE, Albuquerque, New Mexico 87107

SHIPROCK PINNACLE HOTEL & RESTAURANT

SHIPROCK, NEW MEXICO

100% CONSTRUCTION DOCUMENTS

ISSUED FOR CONSTRUCTION

NOVEMBER 3, 2023

PROJECT NUMBER	DRAWN BY	PROJ MGR
2022.10	Author	Designer

PLAN DETAILS

Sheet Title

Sheet Number of

A310

11/6/2023 8:00:53 AM C:\Revit Local\Shiprock Pinnacle_NMdl_dlindbuch_dmarchitects_com.rvt
DYRON MURPHY ARCHITECTS, P.C.

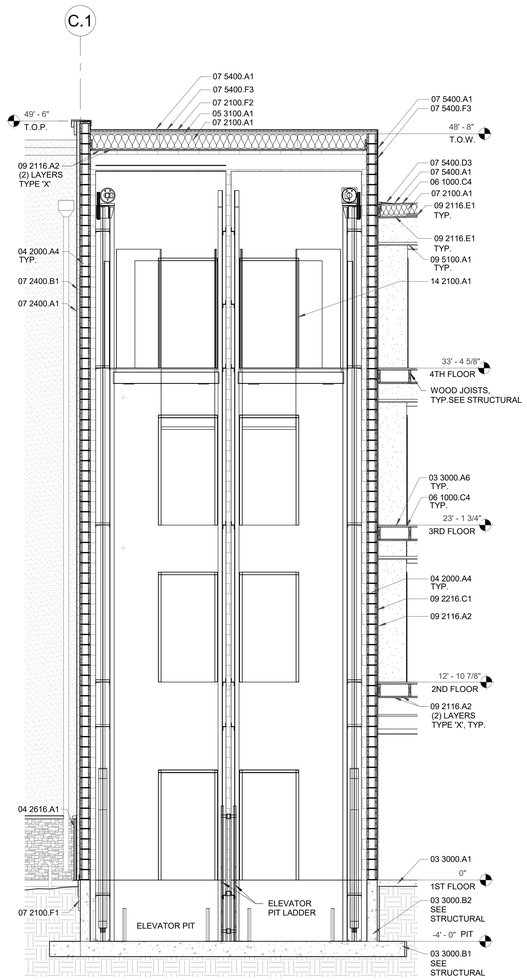

C6 **SECTION - ELEVATOR**
1/4" = 1'-0"

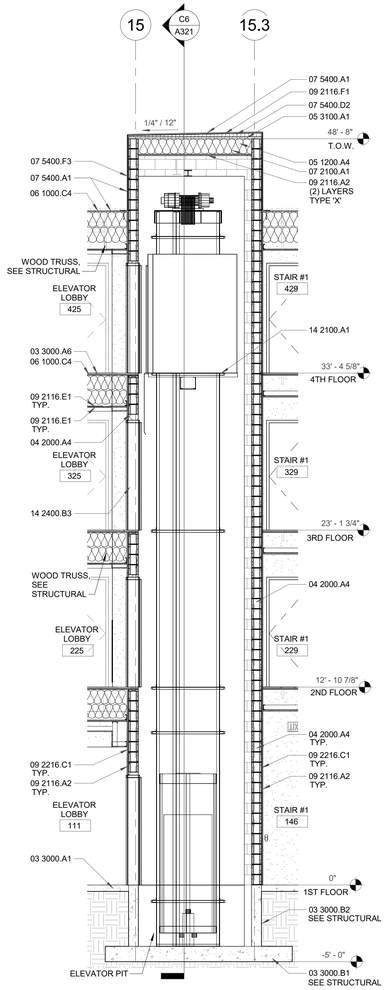

C4 **SECTION - ELEVATOR**
1/4" = 1'-0"

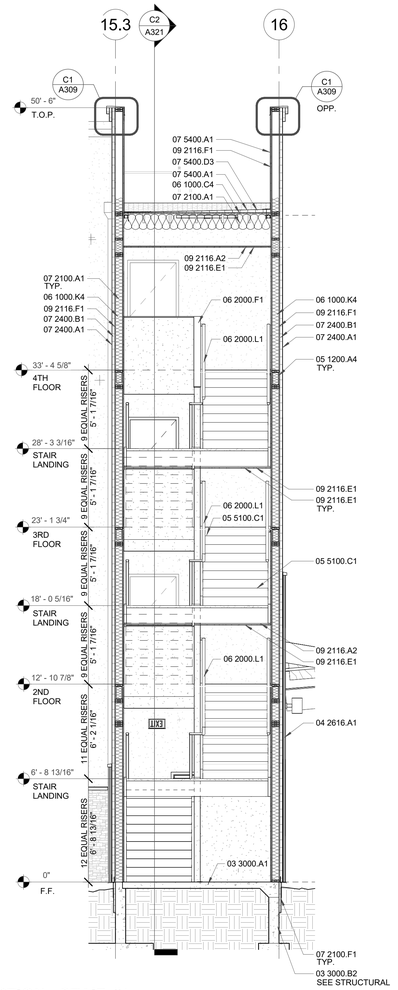

C3 **SECTION - STAIR #1**
1/4" = 1'-0"

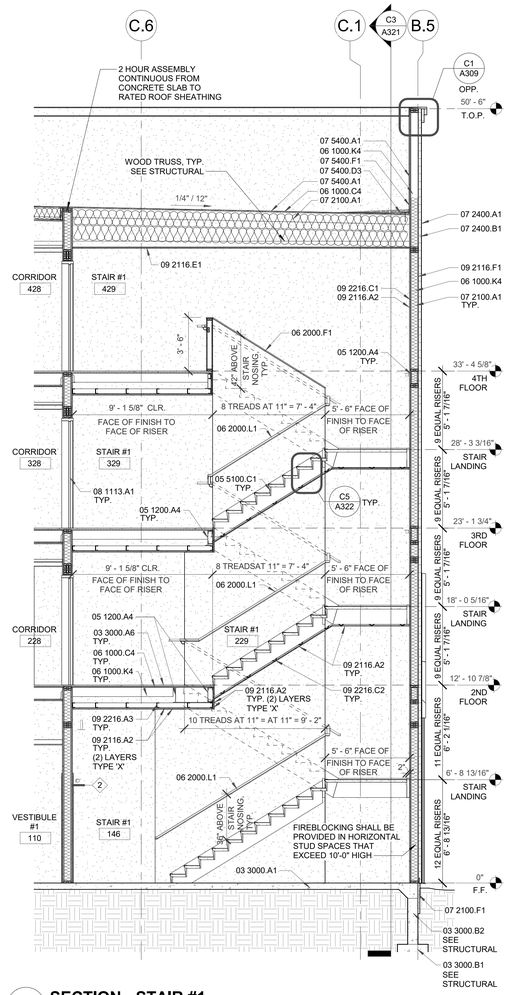

C2 **SECTION - STAIR #1**
1/4" = 1'-0"

GENERAL NOTES

A. ALL DIMENSIONS ARE TO FACE OF STUD UNLESS OTHERWISE NOTED.
B. CONTRACTOR SHALL PROVIDE BLOCKING AT ALL LOCATIONS OF WALL ATTACHMENTS, WALL HUNG CABINETS, SHELVING, ACCESSORIES AND HARDWARE.
C. CONTRACTOR SHALL PROVIDE BLOCKING AT ALL LOCATIONS FOR OWNER PROVIDED EQUIPMENT, COORDINATE WITH OWNER.
D. CONTRACTOR SHALL REFER TO INTERIOR DRAWINGS FOR ALL FINISHES INCLUDING MATERIALS, COLORS AD PATTERNS.
E. CONTRACTOR SHALL COORDINATE ACCESSORY MOUNTING TYPE WITH LOCATIONS SHOWN ON PLAN.
F. AT ACCESSIBLE SINKS AND COUNTERTOPS ENSURE ALL EQUIPMENT INCLUDING BUT NOT LIMITED TO PIPING, INSULATION, GARBAGE DISPOSAL EQUIPMENT ETC. DO NOT INTERFERE WITH UNDER COUNTER WHEELCHAIR ACCESSIBILITY.
G. PROVIDE GROMMETS AT ALL WORKSTATIONS/CASEWORK LOCATIONS, WHERE DATA AND POWER IS PROVIDED UNDER THE CASEWORK.
H. PROVIDE FILLER SPACES AT ALL OPEN CORNERS, BOTTOMS AND ALL VOIDS AT ALL CASEWORK LOCATIONS.
I. PROVIDE LAMINATE BASE AT ALL CASEWORK LOCATIONS PER SELECTION BY ARCHITECT.

KEYED NOTES

03 3000.A1	CONCRETE SLAB
03 3000.A6	GYPCRETE TOPPING, SEE STRUCTURAL
03 3000.B1	CONCRETE FOOTING
03 3000.B2	CONCRETE STEM WALL
04 2000.A4	8X8X16 CMU
04 2616.A1	ADHERED MASONRY VENEER
05 1200.A4	STEEL BEAM, SEE STRUCTURAL
05 3100.A1	STEEL DECK, SEE STRUCTURAL
05 5100.C1	METAL STAIRS WITH CONCRETE TREADS
06 1000.C4	3/4" TREATED PLYWOOD SHEATHING
06 1000.K4	WOOD STUD FRAMING, SEE STRUCTURAL
06 2000.F1	FINISH GRADE WOOD CAP
06 2000.L1	WOOD HANDRAIL
07 2100.A1	BATT INSULATION
07 2100.F1	RIGID INSULATION BOARD
07 2100.F2	TAPERED RIGID INSULATION
07 2400.A1	EXTERIOR INSULATION AND FINISH SYSTEM
07 2400.B1	EIFS INSULATION BOARD
07 5400.A1	TPO ROOF MEMBRANE
07 5400.D2	TAPERED RIGID INSULATION
07 5400.D3	TAPERED INSULATION CRICKETS
07 5400.F1	1/2" GLASS MAT FACED GYPSUM ROOF BOARD
07 5400.F3	1/4" GLASS-MAT FACED GYPSUM ROOF BOARD
08 1113.A1	HOLLOW METAL DOOR AND FRAME
09 2116.A2	5/8" GYPSUM BOARD
09 2116.E1	GYPSUM CEILING BOARD
09 2116.F1	1/2" GLASS-MAT FACED GYPSUM SHEATHING BOARD
09 2216.A3	METAL STUD
09 2216.C1	FURRING CHANNEL
09 2216.C2	7/8" FURRING CHANNEL @ 16" O.C. OR AS REQUIRED
09 5100.A1	SUSPENDED ACOUSTICAL CEILING TILE SYSTEM
14 2100.A1	ELECTRIC TRACTION ELEVATOR
14 2400.B3	TWO-SPEED SLIDING DOOR ELEVATOR

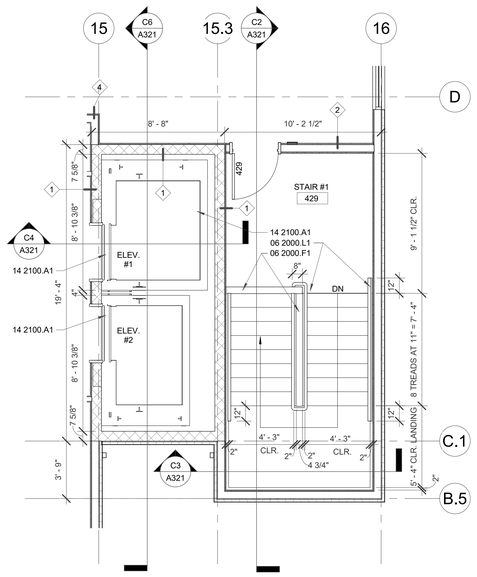

A6 **STAIR #1 PLAN - 4TH TO 3RD FLOOR**
1/4" = 1'-0"

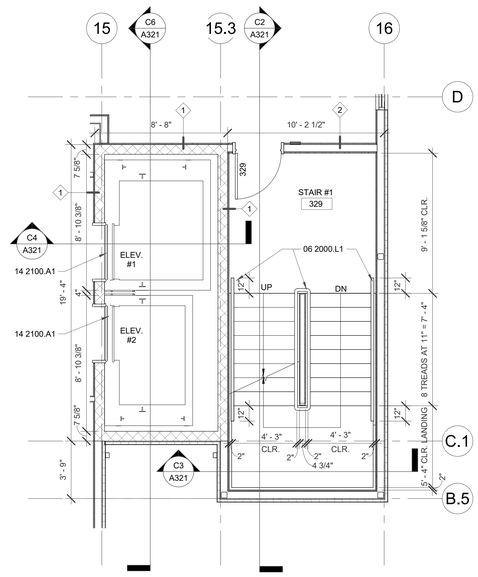

A5 **STAIR #1 PLAN - 3RD TO 4TH FLOOR**
1/4" = 1'-0"

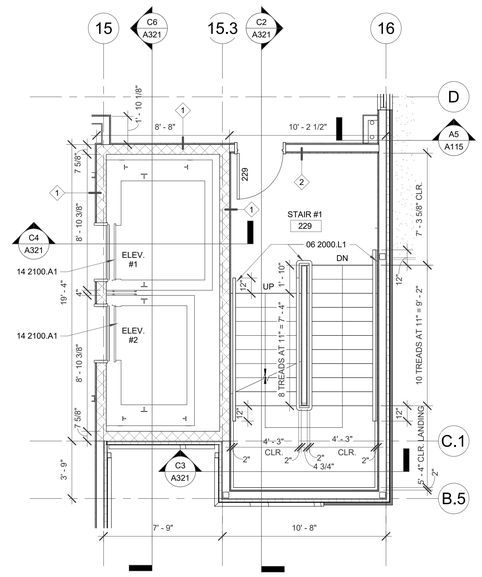

A3 **STAIR #1 PLAN - 2ND TO 3RD FLOOR**
1/4" = 1'-0"

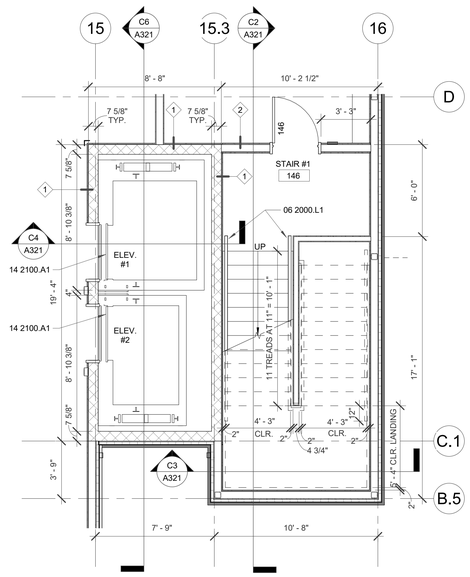

A2 **STAIR #1 PLAN - 1ST TO 2ND FLOOR**
1/4" = 1'-0"

STAMP

STATE OF NEW MEXICO
DYRON V. MURPHY
No. 3713
11/3/2023
REGISTERED ARCHITECT

DYRON MURPHY ARCHITECTS, P.C.

4505 Montbel Place NE, Albuquerque, New Mexico 87107

SHIPROCK PINNACLE HOTEL & RESTAURANT

SHIPROCK, NEW MEXICO

100% CONSTRUCTION DOCUMENTS

ISSUED FOR CONSTRUCTION

NOVEMBER 3, 2023

PROJECT NUMBER	DRAWN BY	PROJ MGR
2022.10	DF/EH	DM

STAIR #1 & ELEVATOR SECTIONS AND PLANS - HOTEL

Sheet Title

Sheet Number

of

A321

11/6/2023 6:01:10 AM C:\Revit Local\Shiprock Pinnacle_Hotel_dfe8bxxh_dm-architects_cam.rvt

DYRON MURPHY ARCHITECTS, P.C.

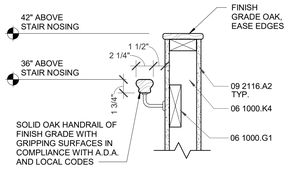

D5 STAIR HANDRAIL DETAIL
1 1/2" = 1'-0"

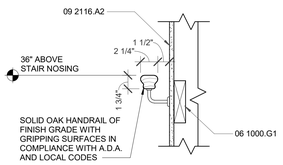

D4 STAIR HANDRAIL DETAIL
1 1/2" = 1'-0"

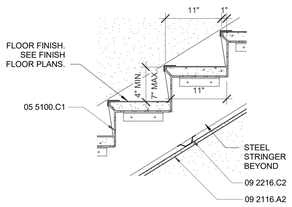

C5 STAIR TREAD DETAIL
1" = 1'-0"

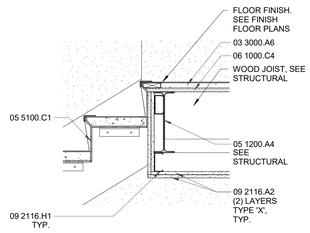

C4 STAIR TO LANDING CONNECTION
1" = 1'-0"

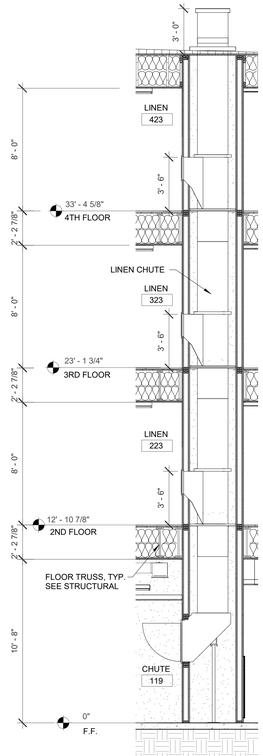

C3 SECTION - LINEN CHUTE
1/4" = 1'-0"

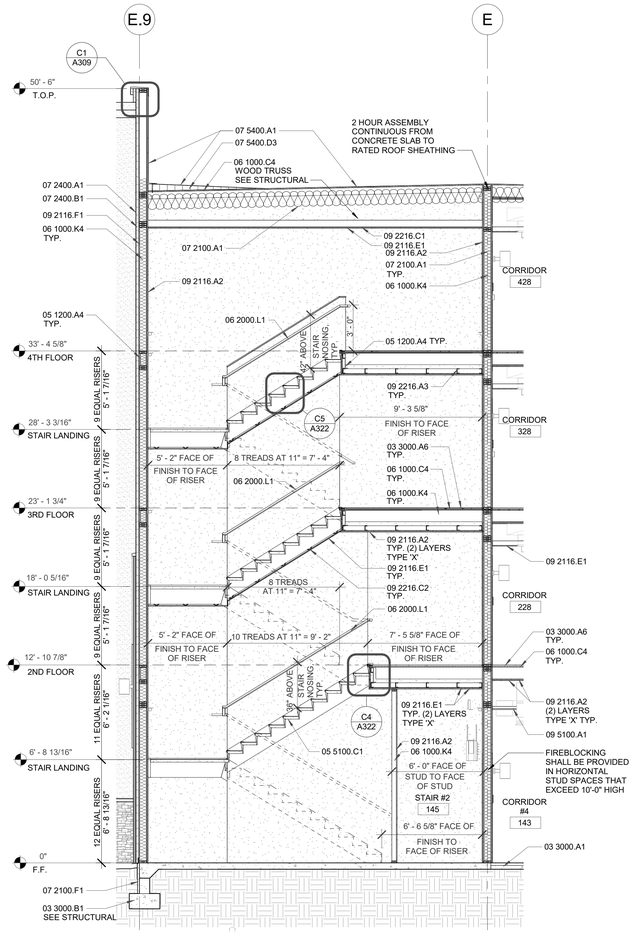

C2 SECTION - STAIR #2
1/4" = 1'-0"

GENERAL NOTES

A. ALL DIMENSIONS ARE TO FACE OF STUD UNLESS OTHERWISE NOTED.
B. CONTRACTOR SHALL PROVIDE BLOCKING AT ALL LOCATIONS OF WALL ATTACHMENTS, WALL HUNG CABINETS, SHELVING, ACCESSORIES AND HARDWARE.
C. CONTRACTOR SHALL PROVIDE BLOCKING AT ALL LOCATIONS FOR OWNER PROVIDED EQUIPMENT, COORDINATE WITH OWNER.
D. CONTRACTOR SHALL REFER TO INTERIOR DRAWINGS FOR ALL FINISHES INCLUDING MATERIALS, COLORS AD PATTERNS.
E. CONTRACTOR SHALL COORDINATE ACCESSORY MOUNTING TYPE WITH LOCATIONS SHOWN ON PLAN.
F. AT ACCESSIBLE SINKS AND COUNTERTOPS ENSURE ALL EQUIPMENT INCLUDING BUT NOT LIMITED TO PIPING, INSULATION, GARBAGE DISPOSAL EQUIPMENT ETC. DO NOT INTERFERE WITH UNDER COUNTER WHEELCHAIR ACCESSIBILITY.
G. PROVIDE GROMMETS AT ALL WORKSTATIONS/CASEWORK LOCATIONS, WHERE DATA AND POWER IS PROVIDED UNDER THE CASEWORK.
H. PROVIDE FILLER SPACES AT ALL OPEN CORNERS, BOTTOMS AND ALL VOIDS AT ALL CASEWORK LOCATIONS.
I. PROVIDE LAMINATE BASE AT ALL CASEWORK LOCATIONS PER SELECTION BY ARCHITECT.

KEYED NOTES

03 3000.A1	CONCRETE SLAB
03 3000.A6	GYPCRETE TOPPING, SEE STRUCTURAL
03 3000.B1	CONCRETE FOOTING
05 1200.A4	STEEL BEAM, SEE STRUCTURAL
05 5100.C1	METAL STAIRS WITH CONCRETE TREADS
06 1000.C4	3/4" TREATED PLYWOOD SHEATHING
06 1000.G1	WOOD BLOCKING
06 1000.K4	WOOD STUD FRAMING, SEE STRUCTURAL
06 2000.F1	FINISH GRADE WOOD CAP
06 2000.L1	WOOD HANDRAIL
07 2100.A1	BATT INSULATION
07 2100.F1	RIGID INSULATION BOARD
07 2400.A1	EXTERIOR INSULATION AND FINISH SYSTEM
07 2400.B1	EIFS INSULATION BOARD
07 5400.A1	TPO ROOF MEMBRANE
07 5400.D3	TAPERED INSULATION CRICKETS
09 2116.A2	5/8" GYPSUM BOARD
09 2116.E1	GYPSUM CEILING BOARD
09 2116.F1	1/2" GLASS-MAT FACED GYPSUM SHEATHING BOARD
09 2116.H1	METAL STUD
09 2216.A3	METAL STUD
09 2216.C1	FURRING CHANNEL
09 2216.C2	7/8" FURRING CHANNEL @ 16" O.C. OR AS REQUIRED
09 5100.A1	SUSPENDED ACOUSTICAL CEILING TILE SYSTEM

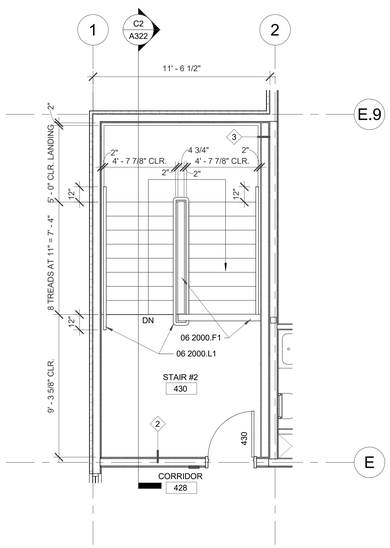

A5 STAIR #2 PLAN - 4TH TO 3RD FLOOR
1/4" = 1'-0"

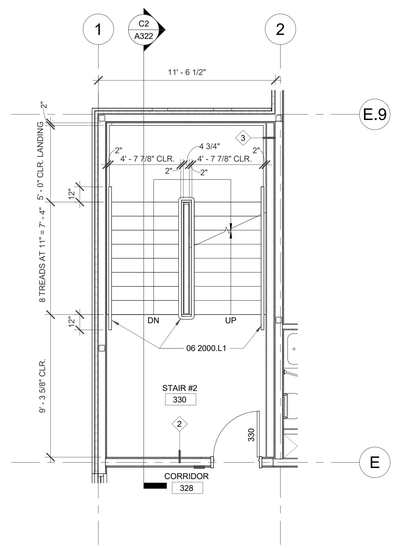

A4 STAIR #2 PLAN - 3RD TO 4TH PLAN
1/4" = 1'-0"

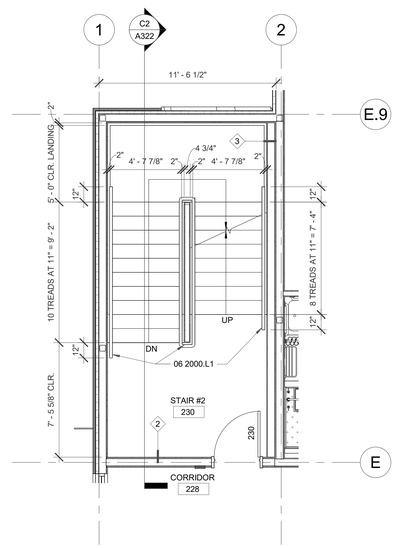

A3 STAIR #2 PLAN - 2ND TO 3RD FLOOR
1/4" = 1'-0"

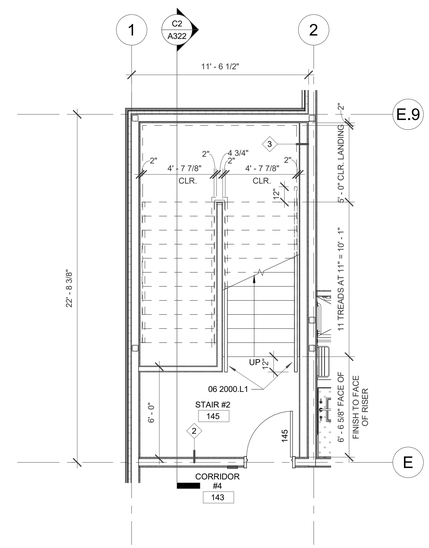

A2 STAIR #2 PLAN - 1ST TO 2ND FLOOR
1/4" = 1'-0"

STAMP

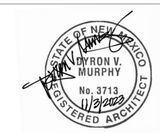

DYRON MURPHY ARCHITECTS, P.C.

4505 Montbel Place NE, Albuquerque, New Mexico 87107

SHIPROCK PINNACLE HOTEL & RESTAURANT

SHIPROCK, NEW MEXICO

100% CONSTRUCTION DOCUMENTS

ISSUED FOR CONSTRUCTION

NOVEMBER 3, 2023

PROJECT NUMBER	DRAWN BY	PROJ MGR
2022.10	Author	Designer

STAIR #2 SECTION & PLANS - HOTEL

Sheet Title

Sheet Number

A322

C:\Revit Local\Shiprock Pinnacle_Hotel_dbd8ouch_dm-architects_cam.rvt
11/6/2023 8:01:21 AM
DYRON MURPHY ARCHITECTS, P.C.

GENERAL NOTES

A. ALL DIMENSIONS ARE TO FACE OF STUD UNLESS OTHERWISE NOTED.
B. CONTRACTOR SHALL PROVIDE BLOCKING AT ALL LOCATIONS OF WALL ATTACHMENTS, WALL HUNG CABINETS, SHELVING, ACCESSORIES AND HARDWARE.
C. CONTRACTOR SHALL PROVIDE BLOCKING AT ALL LOCATIONS FOR OWNER PROVIDED EQUIPMENT, COORDINATE WITH OWNER.
D. CONTRACTOR SHALL REFER TO INTERIOR DRAWINGS FOR ALL FINISHES INCLUDING MATERIALS, COLORS AD PATTERNS.
E. CONTRACTOR SHALL COORDINATE ACCESSORY MOUNTING TYPE WITH LOCATIONS SHOWN ON PLAN.
F. AT ACCESSIBLE SINKS AND COUNTERTOPS ENSURE ALL EQUIPMENT INCLUDING BUT NOT LIMITED TO PIPING, INSULATION, GARBAGE DISPOSAL EQUIPMENT ETC. DO NOT INTERFERE WITH UNDER COUNTER WHEELCHAIR ACCESSIBILITY.
G. PROVIDE GROMMETS AT ALL WORKSTATIONS/CASEWORK LOCATIONS, WHERE DATA AND POWER IS PROVIDED UNDER THE CASEWORK.
H. PROVIDE FILLER SPACES AT ALL OPEN CORNERS, BOTTOMS AND ALL VOIDS AT ALL CASEWORK LOCATIONS.
I. PROVIDE LAMINATE BASE AT ALL CASEWORK LOCATIONS PER SELECTION BY ARCHITECT.

KEYED NOTES

06 2000.D2	WOOD WALL BASE, PAINTED
06 4100.A6	PLASTIC LAMINATE COUNTERTOP
08 1416.A1	FLUSH WOOD DOOR
08 1433.A2	WOOD DOOR FRAME
08 5113.A3	ALUMINUM WINDOW
09 2116.A2	5/8" GYPSUM BOARD
09 3000.B1	PORCELAIN TILE
09 5100.A1	SUSPENDED ACOUSTICAL CEILING TILE SYSTEM
09 6500.A1	RUBBER BASE
09 7200.B1	WALL COVERING
10 2800.C5	SINGLE ROLL TOILET TISSUE DISPENSER
10 2800.F2	TOWEL BAR
10 2800.J4	MIRROR
12 3530.D2	CLOSET SHELF WITH HANGAR ROD
12 3600.A1	SOLID SURFACE COUNTERTOP

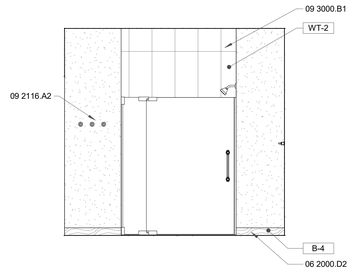

D6 **KING 'A' - BATHROOM**
3/8" = 1'-0"

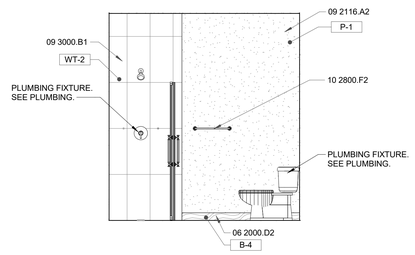

D5 **KING 'A' - BATHROOM**
3/8" = 1'-0"

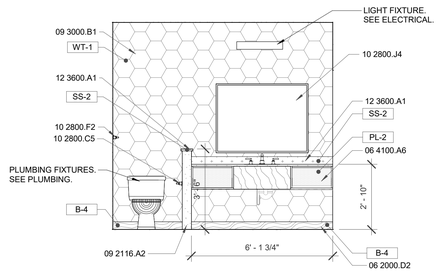

D3 **KING 'A' - BATHROOM**
3/8" = 1'-0"

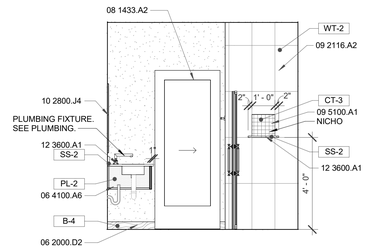

D2 **KING 'A - BATHROOM**
3/8" = 1'-0"

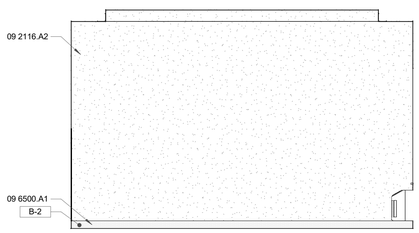

B6 **KING 'A' ELEVATION**
3/8" = 1'-0"

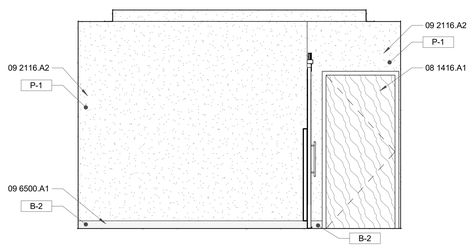

B5 **KING 'A' ELEVATION**
3/8" = 1'-0"

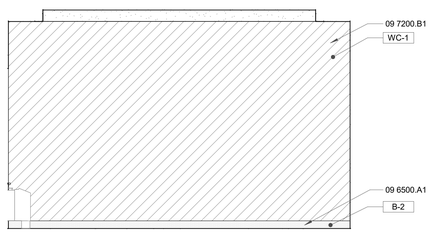

B3 **KING 'A' ELEVATION**
3/8" = 1'-0"

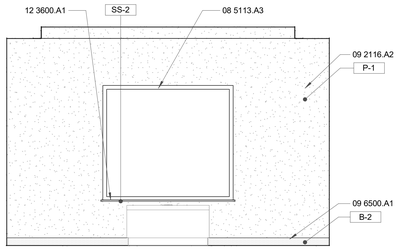

B2 **KING 'A' ELEVATION**
3/8" = 1'-0"

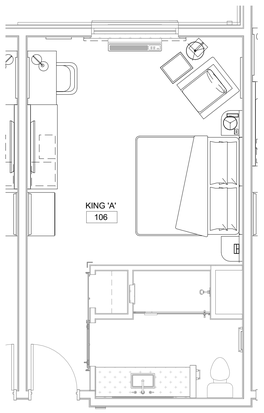

A5 **KING 'A' - FURNITURE PLAN**
1/4" = 1'-0"

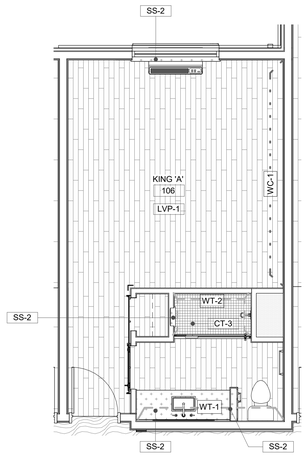

A4 **KING 'A' - FINISH PLAN**
1/4" = 1'-0"

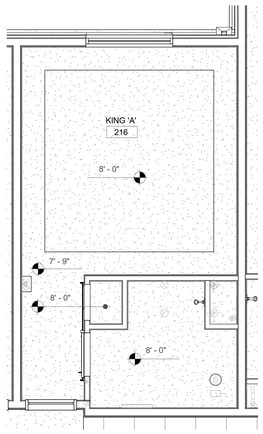

A3 **KING 'A' & 'C' - 2ND, 3RD, & 4TH FLOOR - REFLECTED CEILING PLAN**
1/4" = 1'-0"

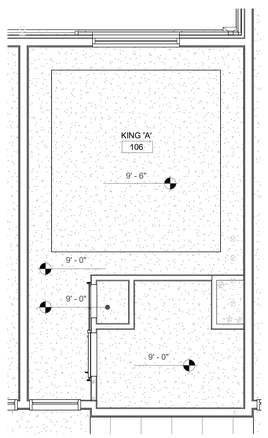

A2 **KING 'A' & 'C' - 1ST FLOOR REFLECTED CEILING PLAN**
1/4" = 1'-0"

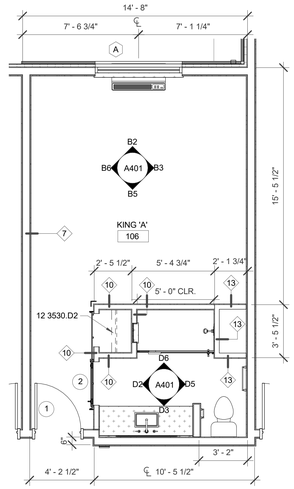

A1 **KING 'A' - FLOOR PLAN**
1/4" = 1'-0"

*REFER TO INTERIOR DESIGN PLANS FOR ADDITIONAL INFORMATION

*REFER TO INTERIOR DESIGN PLANS FOR ADDITIONAL INFORMATION

STAMP

STATE OF NEW MEXICO
DYRON V. MURPHY
No. 3713
11/3/2023
REGISTERED ARCHITECT

DYRON MURPHY ARCHITECTS, P.C.
4505 Montbel Place NE, Albuquerque, New Mexico 87107

SHIPROCK PINNACLE HOTEL & RESTAURANT

SHIPROCK, NEW MEXICO

100% CONSTRUCTION DOCUMENTS

ISSUED FOR CONSTRUCTION

NOVEMBER 3, 2023

PROJECT NUMBER	DRAWN BY	PROJ MGR
2022.10	Author	Designer

KING 'A' & 'C' PLANS & ELEVATIONS

Sheet Title

Sheet Number of

A401

11/6/2023 8:01:34 AM C:\Revit Local\Shiprock Pinnacle_Hotel_dbaBrauch_pm-architects_cen.rvt
DYRON MURPHY ARCHITECTS, P.C.

GENERAL NOTES

A. ALL DIMENSIONS ARE TO FACE OF STUD UNLESS OTHERWISE NOTED.
B. CONTRACTOR SHALL PROVIDE BLOCKING AT ALL LOCATIONS OF WALL ATTACHMENTS, WALL HUNG CABINETS, SHELVING, ACCESSORIES AND HARDWARE.
C. CONTRACTOR SHALL PROVIDE BLOCKING AT ALL LOCATIONS FOR OWNER PROVIDED EQUIPMENT, COORDINATE WITH OWNER.
D. CONTRACTOR SHALL REFER TO INTERIOR DRAWINGS FOR ALL FINISHES INCLUDING MATERIALS, COLORS AD PATTERNS.
E. CONTRACTOR SHALL COORDINATE ACCESSORY MOUNTING TYPE WITH LOCATIONS SHOWN ON PLAN.
F. AT ACCESSIBLE SINKS AND COUNTERTOPS ENSURE ALL EQUIPMENT INCLUDING BUT NOT LIMITED TO PIPING, INSULATION, GARBAGE DISPOSAL EQUIPMENT ETC. DO NOT INTERFERE WITH UNDER COUNTER WHEELCHAIR ACCESSIBILITY.
G. PROVIDE GROMMETS AT ALL WORKSTATIONS/CASEWORK LOCATIONS, WHERE DATA AND POWER IS PROVIDED UNDER THE CASEWORK.
H. PROVIDE FILLER SPACES AT ALL OPEN CORNERS, BOTTOMS AND ALL VOIDS AT ALL CASEWORK LOCATIONS.
I. PROVIDE LAMINATE BASE AT ALL CASEWORK LOCATIONS PER SELECTION BY ARCHITECT.

KEYED NOTES

06 2000.D2	WOOD WALL BASE, PAINTED
08 1416.A1	FLUSH WOOD DOOR
08 5113.A1	ALUMINUM WINDOW FRAME
09 2116.A2	5/8" GYPSUM BOARD
09 3000.B1	PORCELAIN TILE
09 5100.A1	SUSPENDED ACOUSTICAL CEILING TILE SYSTEM
09 6500.A1	RUBBER BASE
09 7200.B1	WALL COVERING
10 2601.A1	CORNER GUARD
10 2800.G5	18" VERTICAL GRAB BAR
10 2800.J4	MIRROR
12 3600.A1	SOLID SURFACE COUNTERTOP

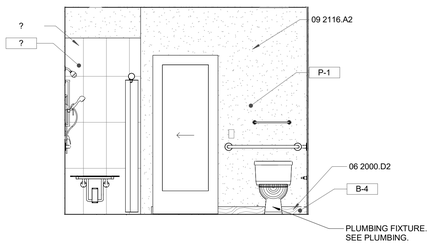

D5 KING ADA 'B' - BATHROOM
3/8" = 1'-0"

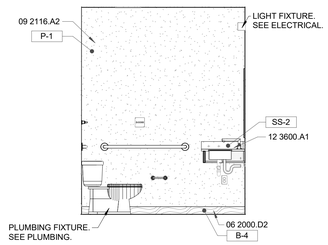

D4 KING ADA 'B' - BATHROOM
3/8" = 1'-0"

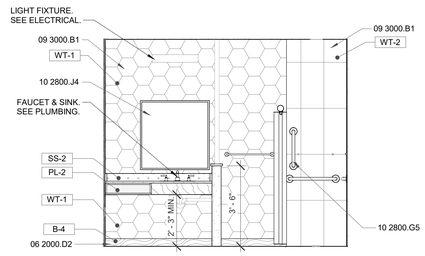

D3 KING ADA 'B' - BATHROOM
3/8" = 1'-0"

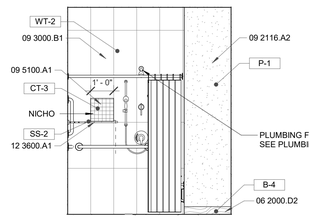

D1 KING ADA 'B' - BATHROOM
3/8" = 1'-0"

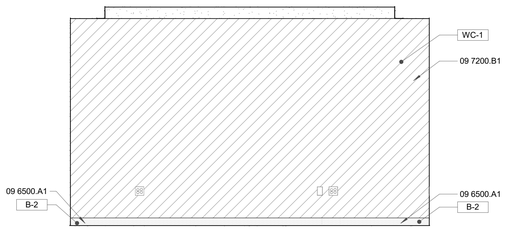

C6 KING ADA 'B' - ELEVATION
3/8" = 1'-0"

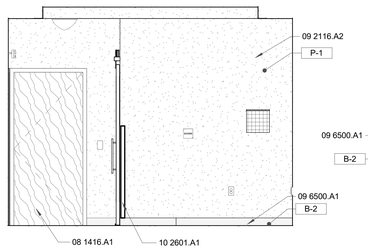

C4 KING ADA 'B' - ELEVATION
3/8" = 1'-0"

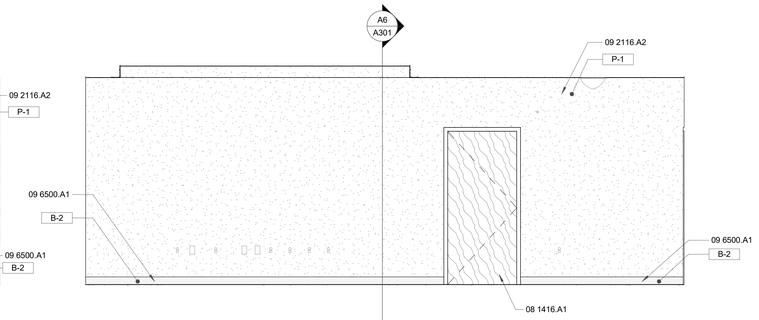

C3 KING ADA 'B' - ELEVATION
3/8" = 1'-0"

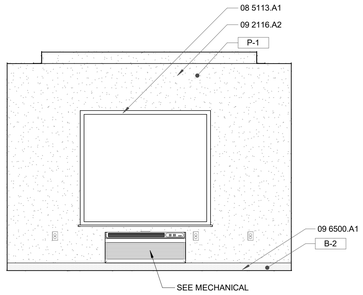

C1 KING ADA 'B' - ELEVATION
3/8" = 1'-0"

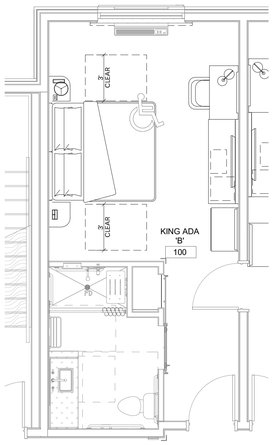

A5 KING ADA 'B' - FURNITURE PLAN
1/4" = 1'-0"

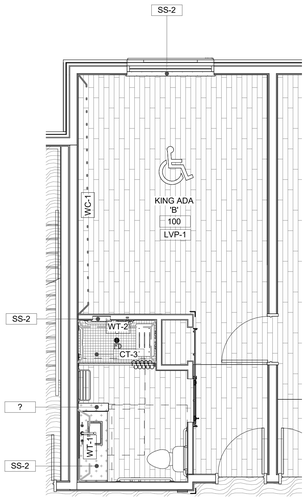

A4 KING ADA 'B' - FINISH FLOOR PLAN
1/4" = 1'-0"

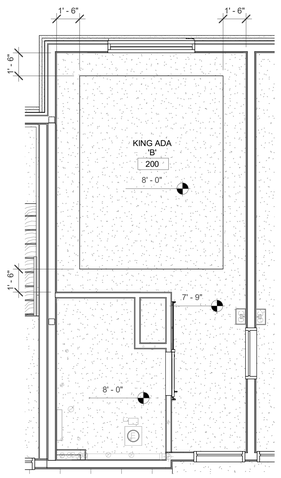

A3 KING ADA 'B' - 2ND FLOOR REFLECTED CEILING PLAN
1/4" = 1'-0"

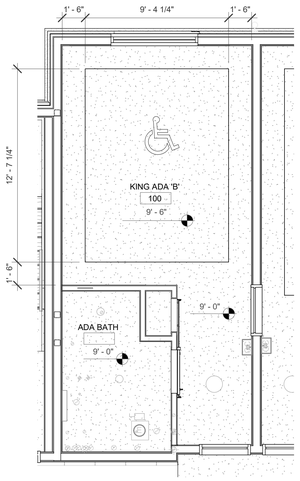

A2 KING ADA 'B' - 1ST FLOOR REFLECTED CEILING PLAN
1/4" = 1'-0"

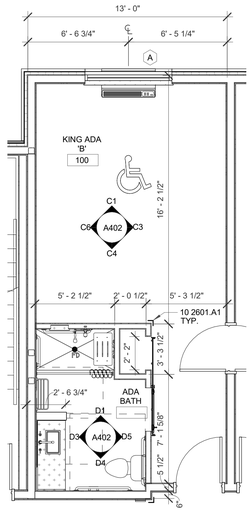

A1 KING ADA 'B' - FLOOR PLAN
1/4" = 1'-0"

*REFER TO INTERIOR DESIGN PLANS FOR ADDITIONAL INFORMATION

*REFER TO INTERIOR DESIGN PLANS FOR ADDITIONAL INFORMATION

STAMP

STATE OF NEW MEXICO
DYRON V. MURPHY
No. 3713
11/3/2023
REGISTERED ARCHITECT

DYRON MURPHY ARCHITECTS, P.C.

4505 Montbel Place NE, Albuquerque, New Mexico 87107

SHIPROCK PINNACLE HOTEL & RESTAURANT

SHIPROCK, NEW MEXICO

100% CONSTRUCTION DOCUMENTS

ISSUED FOR CONSTRUCTION

NOVEMBER 3, 2023

PROJECT NUMBER	DRAWN BY	PROJ MGR
2022.10	Author	Designer

KING ADA 'B' PLANS & INTERIOR ELEVATIONS

Sheet Title

Sheet Number of

A402

11/6/2023 8:51:49 AM C:\Revit Local\Shiprock Pinnacle_Hotel_Shelbourch_dmarchitects_corr.rvt
DYRON MURPHY ARCHITECTS, P.C.

GENERAL NOTES

A. ALL DIMENSIONS ARE TO FACE OF STUD UNLESS OTHERWISE NOTED.
B. CONTRACTOR SHALL PROVIDE BLOCKING AT ALL LOCATIONS OF WALL ATTACHMENTS, WALL HUNG CABINETS, SHELVING, ACCESSORIES AND HARDWARE.
C. CONTRACTOR SHALL PROVIDE BLOCKING AT ALL LOCATIONS FOR OWNER PROVIDED EQUIPMENT, COORDINATE WITH OWNER.
D. CONTRACTOR SHALL REFER TO INTERIOR DRAWINGS FOR ALL FINISHES INCLUDING MATERIALS, COLORS AD PATTERNS.
E. CONTRACTOR SHALL COORDINATE ACCESSORY MOUNTING TYPE WITH LOCATIONS SHOWN ON PLAN.
F. AT ACCESSIBLE SINKS AND COUNTERTOPS ENSURE ALL EQUIPMENT INCLUDING BUT NOT LIMITED TO PIPING, INSULATION, GARBAGE DISPOSAL EQUIPMENT ETC. DO NOT INTERFERE WITH UNDER COUNTER WHEELCHAIR ACCESSIBILITY.
G. PROVIDE GROMMETS AT ALL WORKSTATIONS/CASEWORK LOCATIONS, WHERE DATA AND POWER IS PROVIDED UNDER THE CASEWORK.
H. PROVIDE FILLER SPACES AT ALL OPEN CORNERS, BOTTOMS AND ALL VOIDS AT ALL CASEWORK LOCATIONS.
I. PROVIDE LAMINATE BASE AT ALL CASEWORK LOCATIONS PER SELECTION BY ARCHITECT.

KEYED NOTES

06 2000.D2	WOOD WALL BASE, PAINTED
08 1416.A1	FLUSH WOOD DOOR
08 1433.A2	WOOD DOOR FRAME
08 5113.A3	ALUMINUM WINDOW
09 2116.A2	5/8" GYPSUM BOARD
09 3000.B1	PORCELAIN TILE
09 5100.A1	SUSPENDED ACOUSTICAL CEILING TILE SYSTEM
09 6500.A1	RUBBER BASE
09 7200.B1	WALL COVERING
10 2800.C5	SINGLE ROLL TOILET TISSUE DISPENSER
10 2800.F2	TOWEL BAR
10 2800.H9	CURTAIN AND TRACK
10 2800.J4	MIRROR
12 3600.A1	SOLID SURFACE COUNTERTOP
DIVISION 09	FINISHES

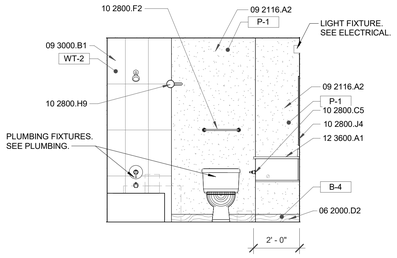

D4 **DBL QUEEN BATHROOM**
3/8" = 1'-0"

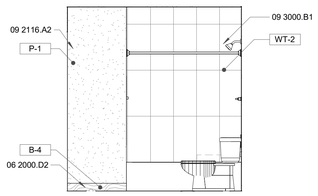

D3 **DBL QUEEN BATHROOM**
3/8" = 1'-0"

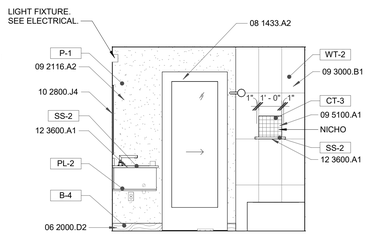

D2 **DBL QUEEN BATHROOM**
3/8" = 1'-0"

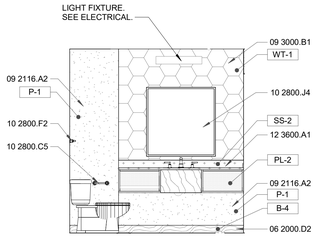

D1 **DOUBLE QUEEN 'A' & 'C' BATH ELEVATION**
3/8" = 1'-0"

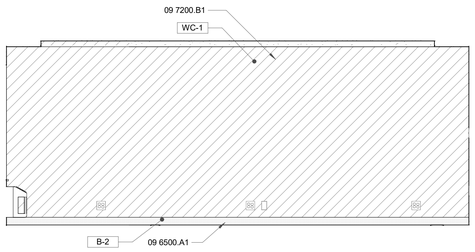

C6 **DOUBLE QUEEN ELEVATION**
3/8" = 1'-0"

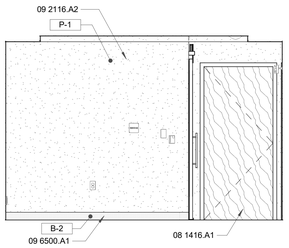

C4 **DOUBLE QUEEN ELEVATION**
3/8" = 1'-0"

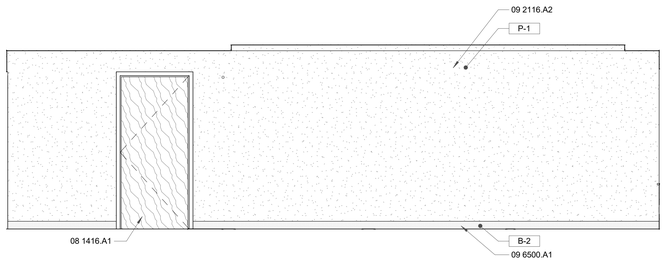

C3 **DOUBLE QUEEN ELEVATION**
3/8" = 1'-0"

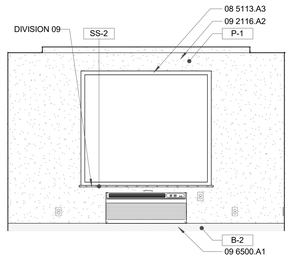

C1 **DOUBLE QUEEN ELEVATION**
3/8" = 1'-0"

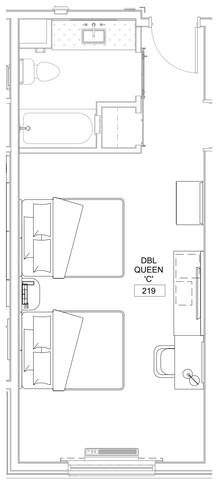

A4 **DOUBLE QUEEN 'A' & 'C' FURNITURE PLAN**
1/4" = 1'-0"

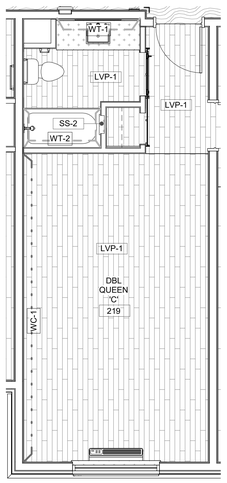

A3 **DOUBLE QUEEN 'A' & 'C' FINISH PLAN**
1/4" = 1'-0"

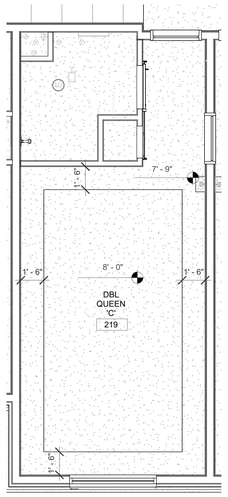

A2 **DOUBLE QUEEN 'A' & 'C' REFLECTED CEILING PLAN**
1/4" = 1'-0"

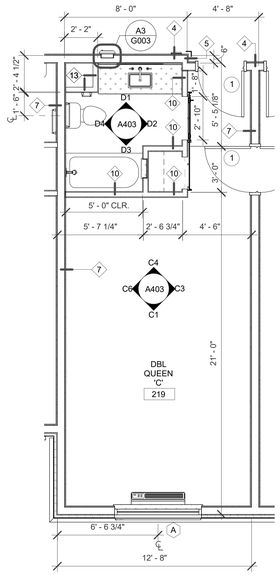

A1 **DOUBLE QUEEN 'A' & 'C' FLOOR PLAN**
1/4" = 1'-0"

*REFER TO INTERIOR DESIGN PLANS FOR ADDITIONAL INFORMATION

*REFER TO INTERIOR DESIGN PLANS FOR ADDITIONAL INFORMATION

STAMP

STATE OF NEW MEXICO
DYRON V. MURPHY
No. 3713
11/3/2023
REGISTERED ARCHITECT

DYRON MURPHY ARCHITECTS, P.C.
4505 Montbel Place NE, Albuquerque, New Mexico 87107

SHIPROCK PINNACLE HOTEL & RESTAURANT

SHIPROCK, NEW MEXICO

100% CONSTRUCTION DOCUMENTS

ISSUED FOR CONSTRUCTION

NOVEMBER 3, 2023

PROJECT NUMBER	DRAWN BY	PROJ MGR
2022.10	Author	Designer

DOUBLE QUEEN 'A & C' PLANS & INTERIOR ELEVATIONS

Sheet Title

Sheet Number

A403

of

11/6/2023 8:02:02 AM C:\Revit Local\Shiprock Pinnacle_Hotel_dirarchitects_com.rvt
DYRON MURPHY ARCHITECTS, P.C.

GENERAL NOTES

A. ALL DIMENSIONS ARE TO FACE OF STUD UNLESS OTHERWISE NOTED.
B. CONTRACTOR SHALL PROVIDE BLOCKING AT ALL LOCATIONS OF WALL ATTACHMENTS, WALL HUNG CABINETS, SHELVING, ACCESSORIES AND HARDWARE.
C. CONTRACTOR SHALL PROVIDE BLOCKING AT ALL LOCATIONS FOR OWNER PROVIDED EQUIPMENT, COORDINATE WITH OWNER.
D. CONTRACTOR SHALL REFER TO INTERIOR DRAWINGS FOR ALL FINISHES INCLUDING MATERIALS, COLORS AD PATTERNS.
E. CONTRACTOR SHALL COORDINATE ACCESSORY MOUNTING TYPE WITH LOCATIONS SHOWN ON PLAN.
F. AT ACCESSIBLE SINKS AND COUNTERTOPS ENSURE ALL EQUIPMENT INCLUDING BUT NOT LIMITED TO PIPING, INSULATION, GARBAGE DISPOSAL EQUIPMENT ETC. DO NOT INTERFERE WITH UNDER COUNTER WHEELCHAIR ACCESSIBILITY.
G. PROVIDE GROMMETS AT ALL WORKSTATIONS/CASEWORK LOCATIONS, WHERE DATA AND POWER IS PROVIDED UNDER THE CASEWORK.
H. PROVIDE FILLER SPACES AT ALL OPEN CORNERS, BOTTOMS AND ALL VOIDS AT ALL CASEWORK LOCATIONS.
I. PROVIDE LAMINATE BASE AT ALL CASEWORK LOCATIONS PER SELECTION BY ARCHITECT.

KEYED NOTES

06 2000.D2	WOOD WALL BASE, PAINTED
08 1416.A1	FLUSH WOOD DOOR
08 5113.A3	ALUMINUM WINDOW
09 2116.A2	5/8" GYPSUM BOARD
09 3000.B1	PORCELAIN TILE
09 6500.A1	RUBBER BASE
09 7200.B1	WALL COVERING
10 2601.A1	CORNER GUARD
10 2800.C5	SINGLE ROLL TOILET TISSUE DISPENSER
10 2800.F2	TOWEL BAR
10 2800.G3	36" GRAB BAR
10 2800.G4	42" GRAB BAR
10 2800.H9	CURTAIN AND TRACK
10 2800.J4	MIRROR
10 2800.L1	ACCESSIBLE SHOWER SEAT
12 3600.A1	SOLID SURFACE COUNTERTOP

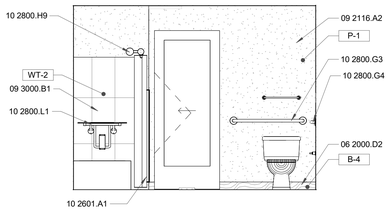

D5 ADA DOUBLE QUEEN BATHROOM
3/8" = 1'-0"

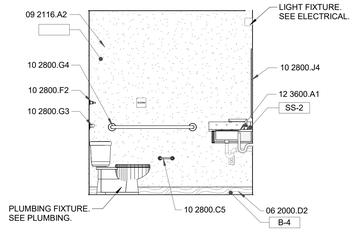

D4 ADA DOUBLE QUEEN BATHROOM
3/8" = 1'-0"

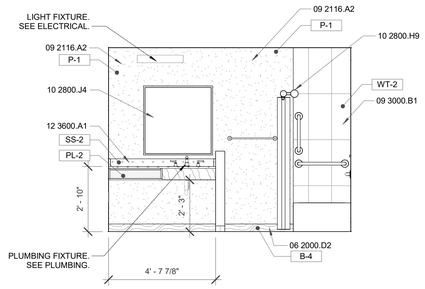

D3 ADA DOUBLE QUEEN BATHROOM
3/8" = 1'-0"

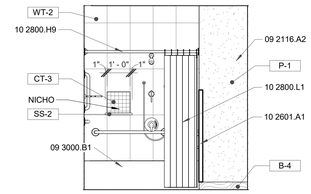

D2 ADA DOUBLE QUEEN BATHROOM
3/8" = 1'-0"

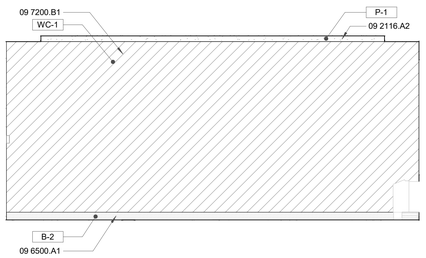

C5 ADA DOUBLE QUEEN ELEVATION
3/8" = 1'-0"

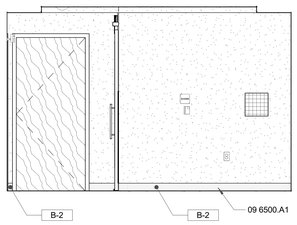

C4 ADA DOUBLE QUEEN ELEVATION
3/8" = 1'-0"

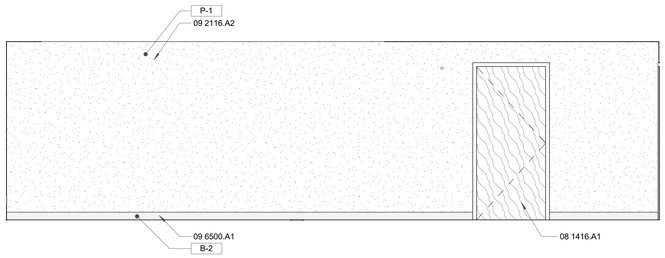

C3 ADA DOUBLE QUEEN ELEVATION
3/8" = 1'-0"

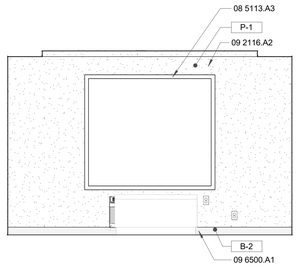

C1 ADA DOUBLE QUEEN ELEVATION
3/8" = 1'-0"

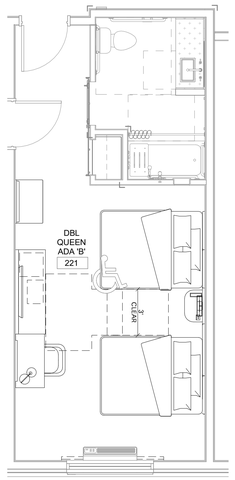

A4 ADA DOUBLE QUEEN 'B' FURNITURE PLAN
1/4" = 1'-0"

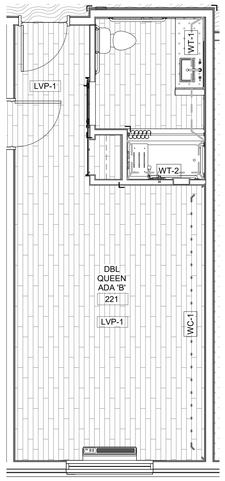

A3 ADA DOUBLE QUEEN 'B' FINISH FLOOR PLAN
1/4" = 1'-0"

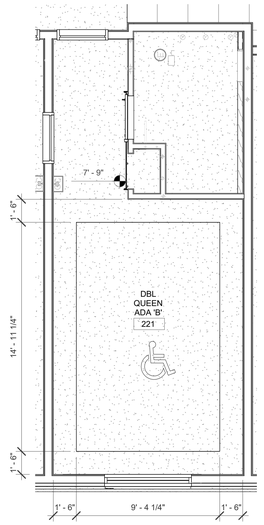

A2 ADA DOUBLE QUEEN 'B' REFLECTED CEILING PLAN
1/4" = 1'-0"

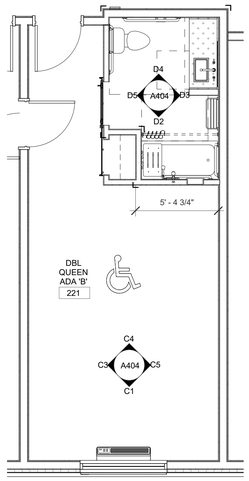

A1 ADA DOUBLE QUEEN 'B' FLOOR PLAN
1/4" = 1'-0"

*REFER TO INTERIOR DESIGN PLANS FOR ADDITIONAL INFORMATION

*REFER TO INTERIOR DESIGN PLANS FOR ADDITIONAL INFORMATION

STAMP

STATE OF NEW MEXICO
DYRON V. MURPHY
No. 3713
11/3/2023
REGISTERED ARCHITECT

DYRON MURPHY ARCHITECTS, P.C.
4505 Montbel Place NE, Albuquerque, New Mexico 87107

SHIPROCK PINNACLE HOTEL & RESTAURANT

SHIPROCK, NEW MEXICO

100% CONSTRUCTION DOCUMENTS

ISSUED FOR CONSTRUCTION

NOVEMBER 3, 2023

PROJECT NUMBER	DRAWN BY	PROJ MGR
2022.10	Author	Designer

DOUBLE QUEEN ADA 'B' PLANS & ELEVATIONS - HOTEL

Sheet Title

Sheet Number of

A404

11/6/2023 8:36:32 AM C:\Revit Local\Shiprock Pinnacle_Hotel_dhaBsuzh_dma-architects_cam.rvt
DYRON MURPHY ARCHITECTS, P.C.

EQUIPMENT SCHEDULE										
EQUIPMENT NUMBER	EQUIPMENT NAME	COUNT	MANUFACTURER	MODEL	RESPONSIBLE	POWER REQUIRED	I.T. REQUIRED	MECHANCIAL REQUIRED	PLUMBING REQUIRED	REMARKS
001	WASHER	6	MAYTAG	MHN33PD	CP/CI	YES	NO	NO	YES	
002	DRYER	6	MAYTAG	MDG28PDCWW	CP/CI	YES	NO	YES	YES	
003	ICE MACHINE	4	SCOTSMAN	iceValet ® HD30	CP/CI	YES	NO	NO	YES	(1) PER FLOOR
004	VENDING MACHINE	1	TBD	TBD	CP/CI	YES	NO	NO	NO	
005	COMMERCIAL WASHER	2	DEXTER	T-950	CP/CI	YES	NO	NO	YES	
006	COMMERCIAL DRYER	2	DEXTER	T-50	CP/CI	YES	NO	YES	YES	
007	REACH-IN COOLERS	2	TRUE MANUFACTURING CO., INC.	GDM-12-HC~TSL01	CP/CI	YES	NO	NO	NO	

OP= Owner Procured CP = Contractor Procured
OI = Owner Installed CI = Contractor Installed

GENERAL NOTES

A. ALL DIMENSIONS ARE TO FACE OF STUD UNLESS OTHERWISE NOTED.
B. CONTRACTOR SHALL PROVIDE BLOCKING AT ALL LOCATIONS OF WALL ATTACHMENTS, WALL HUNG CABINETS, SHELVING, ACCESSORIES AND HARDWARE.
C. CONTRACTOR SHALL PROVIDE BLOCKING AT ALL LOCATIONS FOR OWNER PROVIDED EQUIPMENT, COORDINATE WITH OWNER.
D. CONTRACTOR SHALL REFER TO INTERIOR DRAWINGS FOR ALL FINISHES INCLUDING MATERIALS, COLORS AD PATTERNS.
E. CONTRACTOR SHALL COORDINATE ACCESSORY MOUNTING TYPE WITH LOCATIONS SHOWN ON PLAN.
F. AT ACCESSIBLE SINKS AND COUNTERTOPS ENSURE ALL EQUIPMENT INCLUDING BUT NOT LIMITED TO PIPING, INSULATION, GARBAGE DISPOSAL EQUIPMENT ETC. DO NOT INTERFERE WITH UNDER COUNTER WHEELCHAIR ACCESSIBILITY.
G. PROVIDE GROMMETS AT ALL WORKSTATIONS/CASEWORK LOCATIONS, WHERE DATA AND POWER IS PROVIDED UNDER THE CASEWORK.
H. PROVIDE FILLER SPACES AT ALL OPEN CORNERS, BOTTOMS AND ALL VOIDS AT ALL CASEWORK LOCATIONS.
I. PROVIDE LAMINATE BASE AT ALL CASEWORK LOCATIONS PER SELECTION BY ARCHITECT.

KEYED NOTES

06 4100.A4	PLASTIC LAMINATE COVERED SHELVES
10 2601.A1	CORNER GUARD
10 2800.H4	MOP AND BROOM HOLDER
10 5100.A3	SOLID PHENOLIC LOCKERS
11 3100.A1	REFRIGERATOR
12 3530.B1	COUNTERTOP AS SCHEDULED
12 3600.A1	SOLID SURFACE COUNTERTOP
12 3600.B1	COUNTERTOP, SEE FINISH SCHEDULE

*REFER TO INTERIOR DESIGN PLANS FOR ADDITIONAL INFORMATION

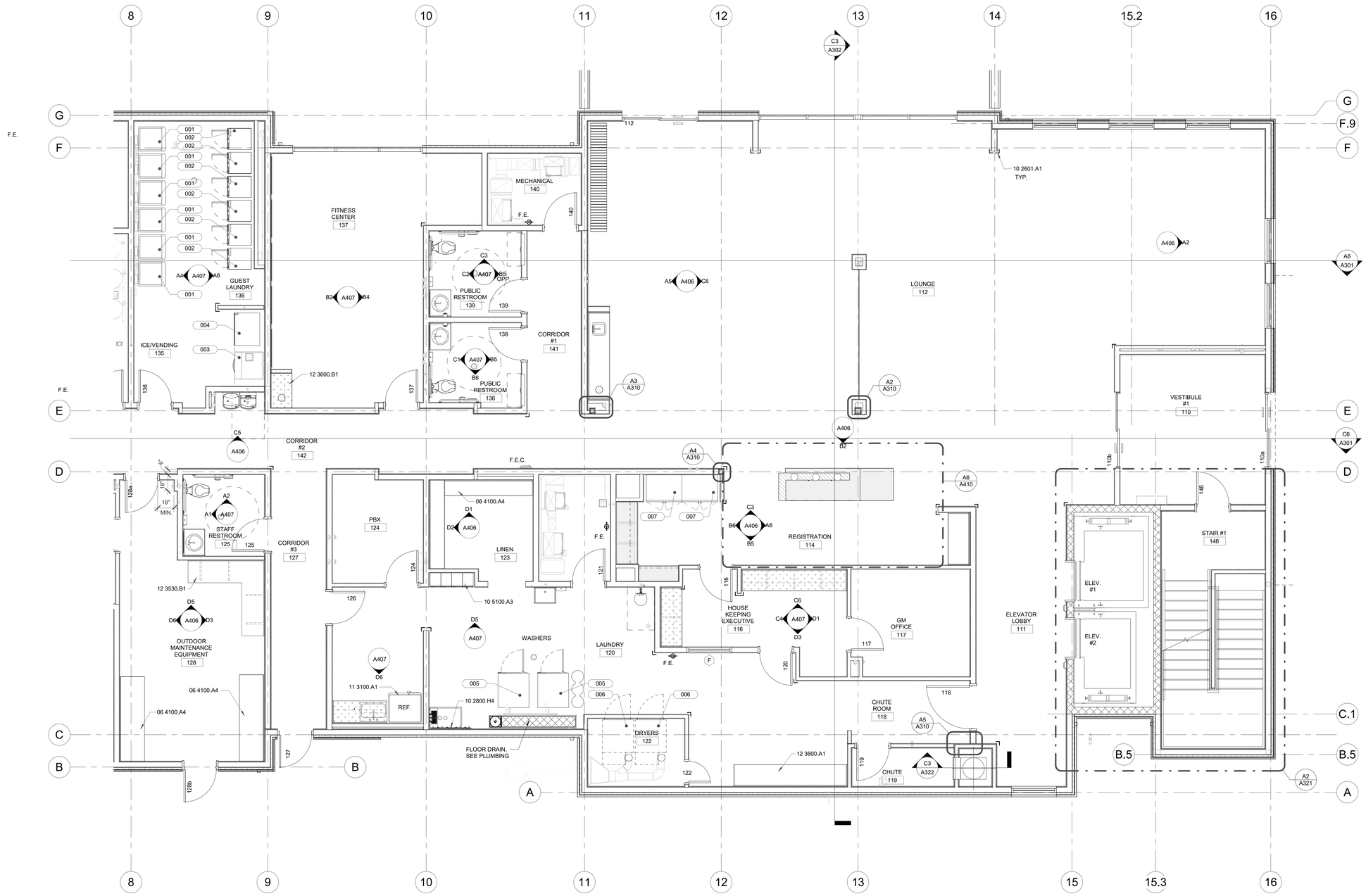

A6 LARGE SCALE PLAN - HOTEL - FIRST FLOOR
1/4" = 1'-0"

*REFER TO INTERIOR DESIGN PLANS FOR ADDITIONAL INFORMATION

STAMP

DYRON MURPHY ARCHITECTS, P.C.
4505 Montbel Place NE, Albuquerque, New Mexico 87107

SHIPROCK PINNACLE HOTEL & RESTAURANT

SHIPROCK, NEW MEXICO

100% CONSTRUCTION DOCUMENTS

ISSUED FOR CONSTRUCTION

NOVEMBER 3, 2023

PROJECT NUMBER	DRAWN BY	PROJ MGR
2022.10	Author	Designer

LARGE SCALE PLAN - HOTEL - 1ST FLOOR

Sheet Title

Sheet Number A405 of

11/6/2023 9:54:19 AM C:\Revit Local\Shiprock Pinnacle_Note_dbclouch_drryan@dab_rpm.rvt
DYRON MURPHY ARCHITECTS, P.C.

GENERAL NOTES

A. ALL DIMENSIONS ARE TO FACE OF STUD UNLESS OTHERWISE NOTED.
B. CONTRACTOR SHALL PROVIDE BLOCKING AT ALL LOCATIONS OF WALL ATTACHMENTS, WALL HUNG CABINETS, SHELVING, ACCESSORIES AND HARDWARE.
C. CONTRACTOR SHALL PROVIDE BLOCKING AT ALL LOCATIONS FOR OWNER PROVIDED EQUIPMENT, COORDINATE WITH OWNER.
D. CONTRACTOR SHALL REFER TO INTERIOR DRAWINGS FOR ALL FINISHES INCLUDING MATERIALS, COLORS AD PATTERNS.
E. CONTRACTOR SHALL COORDINATE ACCESSORY MOUNTING TYPE WITH LOCATIONS SHOWN ON PLAN.
F. AT ACCESSIBLE SINKS AND COUNTERTOPS ENSURE ALL EQUIPMENT INCLUDING BUT NOT LIMITED TO PIPING, INSULATION, GARBAGE DISPOSAL EQUIPMENT ETC. DO NOT INTERFERE WITH UNDER COUNTER WHEELCHAIR ACCESSIBILITY.
G. PROVIDE GROMMETS AT ALL WORKSTATIONS/CASEWORK LOCATIONS, WHERE DATA AND POWER IS PROVIDED UNDER THE CASEWORK.
H. PROVIDE FILLER SPACES AT ALL OPEN CORNERS, BOTTOMS AND ALL VOIDS AT ALL CASEWORK LOCATIONS.
I. PROVIDE LAMINATE BASE AT ALL CASEWORK LOCATIONS PER SELECTION BY ARCHITECT.

KEYED NOTES

04 2616.A1	ADHERED MASONRY VENEER
06 4100.A2	PLASTIC LAMINATE BASE CABINET
06 4100.A4	PLASTIC LAMINATE COVERED SHELVES
06 4100.A6	PLASTIC LAMINATE COUNTERTOP
06 4100.C3	STEEL STANDARDS W/ BRACKETS
08 1416.A1	FLUSH WOOD DOOR
08 5113.A3	ALUMINUM WINDOW
09 2116.A2	5/8" GYPSUM BOARD
09 3000.B1	PORCELAIN TILE
09 6500.A1	RUBBER BASE
09 7200.B1	WALL COVERING
10 2601.A1	CORNER GUARD
12 3530.C5	DRAWER
12 3600.A1	SOLID SURFACE COUNTERTOP
12 3600.B1	COUNTERTOP, SEE FINISH SCHEDULE

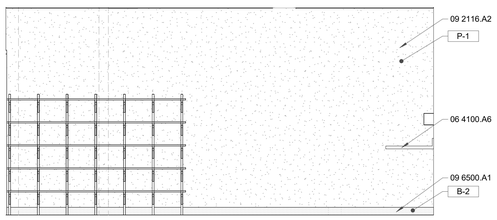

D6 **OUTDOOR MAINTENANCE EQUIPMENT - 128**
3/8" = 1'-0"

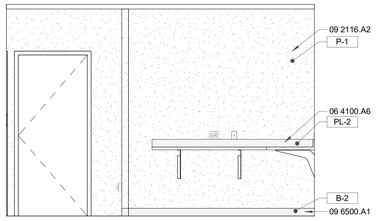

D5 **OUTDOOR MAINTENANCE EQUIPMENT - 128**
3/8" = 1'-0"

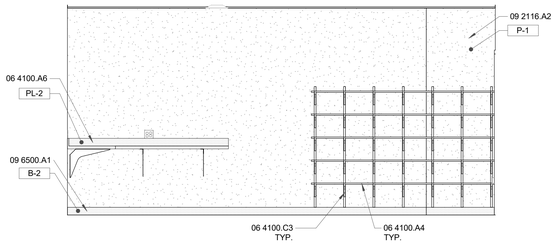

D3 **OUTDOOR MAINTENANCE EQUIPMENT - 128**
3/8" = 1'-0"

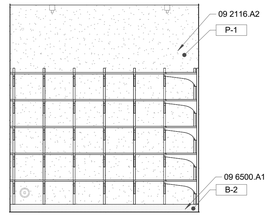

D2 **LINEN - 123**
3/8" = 1'-0"

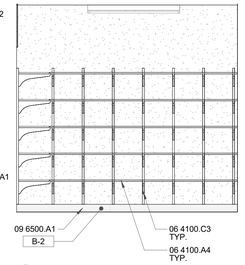

D1 **LINEN - 123**
3/8" = 1'-0"

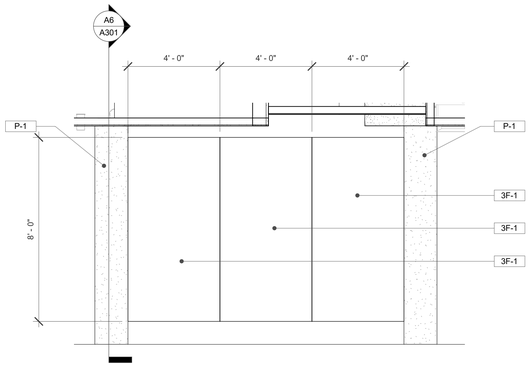

C6 **LOBBY 3FORM ARTWORK**
3/8" = 1'-0"

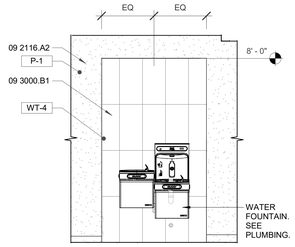

C5 **CORRIDOR - 141**
3/8" = 1'-0"

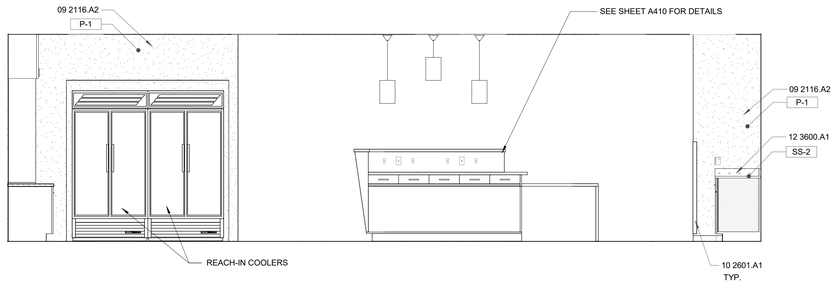

C3 **GRAB 'N GO - 115 AND REGISTRATION - 114**
3/8" = 1'-0"

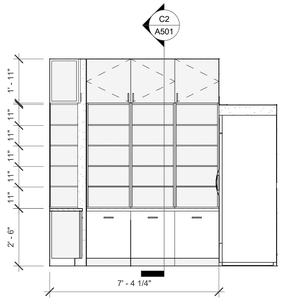

B6 **GRAB 'N GO - 115**
3/8" = 1'-0"

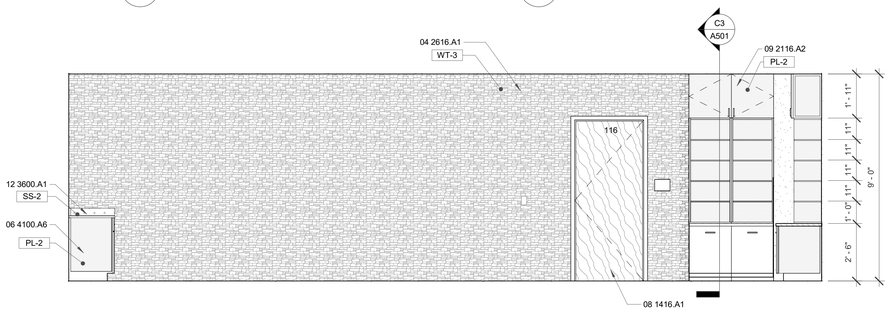

B5 **REGISTRATION - 114 AND GRAB 'N GO - 115**
3/8" = 1'-0"

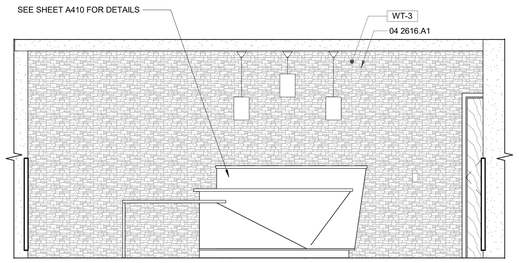

B2 **REGISTRATION - 114**
3/8" = 1'-0"

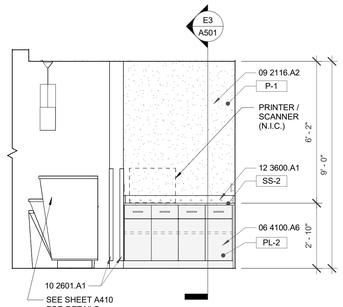

A6 **REGISTRATION - 114**
3/8" = 1'-0"

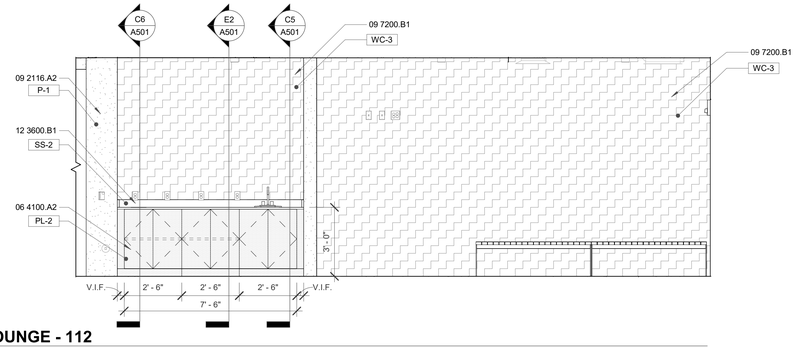

A5 **LOUNGE - 112**
3/8" = 1'-0"

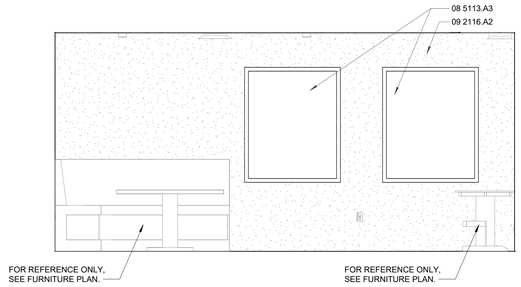

A2 **LOUNGE - 112**
3/8" = 1'-0"

*REFER TO INTERIOR DESIGN PLANS FOR ADDITIONAL INFORMATION

*REFER TO INTERIOR DESIGN PLANS FOR ADDITIONAL INFORMATION

STAMP

STATE OF NEW MEXICO
DYRON V. MURPHY
No. 3713
11/3/2023
REGISTERED ARCHITECT

DYRON MURPHY ARCHITECTS, P.C.
4505 Montbel Place NE, Albuquerque, New Mexico 87107

SHIPROCK PINNACLE HOTEL & RESTAURANT

SHIPROCK, NEW MEXICO

100% CONSTRUCTION DOCUMENTS

ISSUED FOR CONSTRUCTION

NOVEMBER 3, 2023

PROJECT NUMBER	DRAWN BY	PROJ MGR
2022.10	Author	Designer

INTERIOR ELEVATIONS - HOTEL

Sheet Title

Sheet Number

of

A406

11/6/2023 9:01:05 AM C:\Revit Local\Shiprock Pinnacle_Hotel_jbellbusch_jim-architects_corr.rvt
DYRON MURPHY ARCHITECTS, P.C.

GENERAL NOTES

A. ALL DIMENSIONS ARE TO FACE OF STUD UNLESS OTHERWISE NOTED.
B. CONTRACTOR SHALL PROVIDE BLOCKING AT ALL LOCATIONS OF WALL ATTACHMENTS, WALL HUNG CABINETS, SHELVING, ACCESSORIES AND HARDWARE.
C. CONTRACTOR SHALL PROVIDE BLOCKING AT ALL LOCATIONS FOR OWNER PROVIDED EQUIPMENT, COORDINATE WITH OWNER.
D. CONTRACTOR SHALL REFER TO INTERIOR DRAWINGS FOR ALL FINISHES INCLUDING MATERIALS, COLORS AD PATTERNS.
E. CONTRACTOR SHALL COORDINATE ACCESSORY MOUNTING TYPE WITH LOCATIONS SHOWN ON PLAN.
F. AT ACCESSIBLE SINKS AND COUNTERTOPS ENSURE ALL EQUIPMENT INCLUDING BUT NOT LIMITED TO PIPING, INSULATION, GARBAGE DISPOSAL EQUIPMENT ETC. DO NOT INTERFERE WITH UNDER COUNTER WHEELCHAIR ACCESSIBILITY.
G. PROVIDE GROMMETS AT ALL WORKSTATIONS/CASEWORK LOCATIONS, WHERE DATA AND POWER IS PROVIDED UNDER THE CASEWORK.
H. PROVIDE FILLER SPACES AT ALL OPEN CORNERS, BOTTOMS AND ALL VOIDS AT ALL CASEWORK LOCATIONS.
I. PROVIDE LAMINATE BASE AT ALL CASEWORK LOCATIONS PER SELECTION BY ARCHITECT.

KEYED NOTES

06 4100.A2	PLASTIC LAMINATE BASE CABINET
06 4100.A3	PLASTIC LAMINATE WALL CABINET
06 4100.A4	PLASTIC LAMINATE COVERED SHELVES
06 4100.C2	STEEL BRACKET
08 1113.A1	HOLLOW METAL DOOR AND FRAME
08 1416.A1	FLUSH WOOD DOOR
08 5123.A2	STEEL FRAMED WINDOW UNIT
08 8300.A1	MIRROR
09 2116.A2	5/8" GYPSUM BOARD
09 3000.B1	PORCELAIN TILE
09 3000.B2	PORCELAIN TILE BASE
09 6500.A1	RUBBER BASE
09 7200.B1	WALL COVERING
10 2601.A1	CORNER GUARD
10 2800.A3	SURFACE MOUNTED PAPER TOWEL DISPENSER
10 2800.A5	SANITARY NAPKIN DISPOSAL UNIT
10 2800.C6	DOUBLE ROLL TOILET TISSUE DISPENSER
10 2800.G3	36" GRAB BAR
10 2800.G4	42" GRAB BAR
10 2800.H2	SOAP DISPENSER
10 2800.H11	TOILET SEAT COVER DISPENSER
10 2800.H12	BABY CHANGING STATION
10 2800.J4	MIRROR
10 5100.A3	SOLID PHENOLIC LOCKERS
11 2300.A1	WASHER
11 3100.A1	REFRIGERATOR
11 3100.D1	MICROWAVE
11 3100.E2	DRYER
11 4000.A1	ICE DISPENSER
12 3600.A1	SOLID SURFACE COUNTERTOP
12 3600.B1	COUNTERTOP, SEE FINISH SCHEDULE

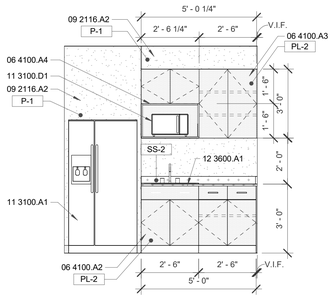

D6 **BREAKROOM - 126**
3/8" = 1'-0"

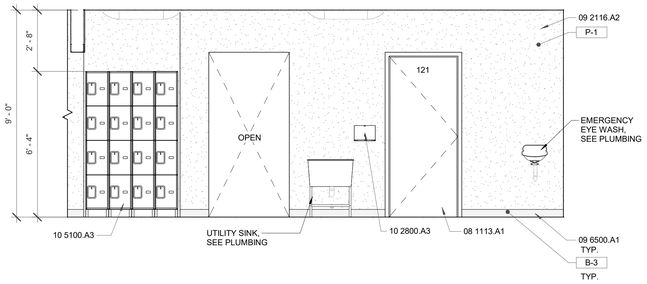

D5 **LAUNDRY - 120**
3/8" = 1'-0"

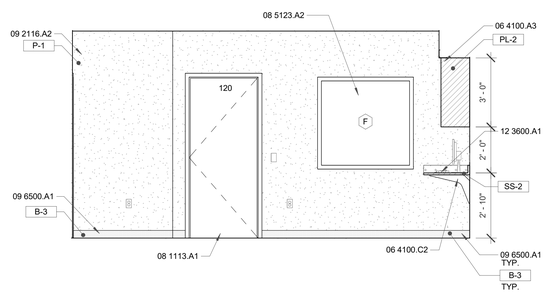

D3 **HOUSEKEEPING EXECUTIVE - 116**
3/8" = 1'-0"

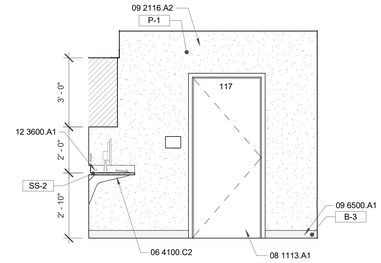

D1 **HOUSEKEEPING EXECUTIVE - 116**
3/8" = 1'-0"

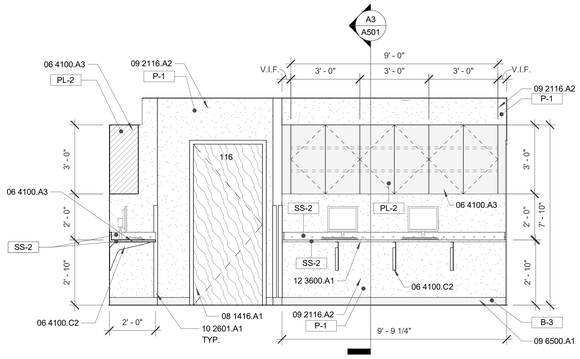

C6 **HOUSEKEEPING - 116**
3/8" = 1'-0"

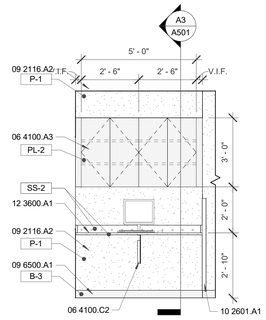

C4 **HOUSEKEEPING EXECUTIVE - 116**
3/8" = 1'-0"

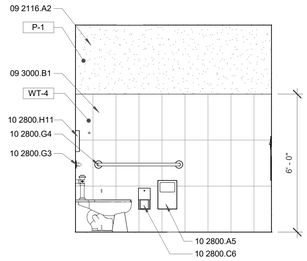

C3 **PUBLIC RESTROOM - 139**
3/8" = 1'-0"

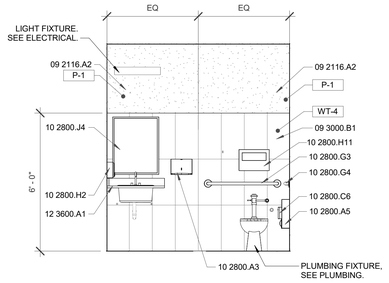

C2 **PUBLIC RESTROOM - 139**
3/8" = 1'-0"

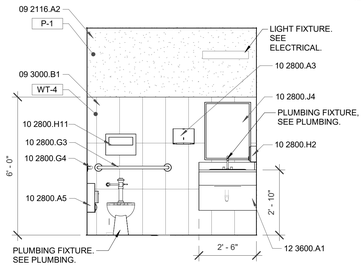

C1 **PUBLIC RESTROOM - 138**
3/8" = 1'-0"

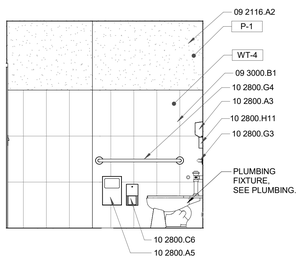

B6 **PUBLIC RESTROOM - 138**
3/8" = 1'-0"

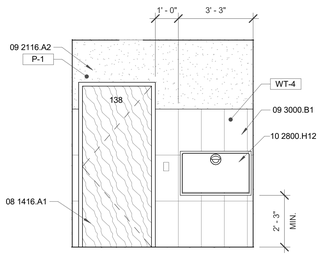

B5 **PUBLIC RESTROOM - 138**
3/8" = 1'-0"

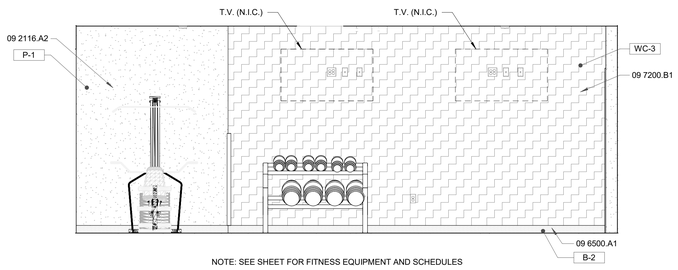

NOTE: SEE SHEET FOR FITNESS EQUIPMENT AND SCHEDULES

B4 **FITNESS CENTER - 137**
3/8" = 1'-0"

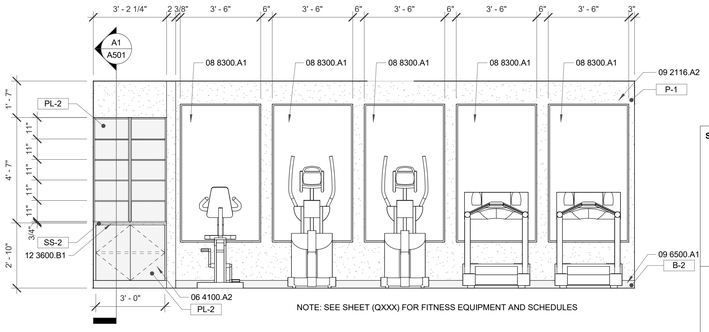

NOTE: SEE SHEET (QXXX) FOR FITNESS EQUIPMENT AND SCHEDULES

B2 **FITNESS CENTER - 137**
3/8" = 1'-0"

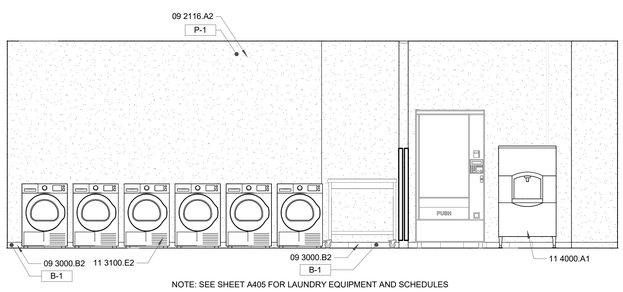

NOTE: SEE SHEET A405 FOR LAUNDRY EQUIPMENT AND SCHEDULES

A6 **GUEST LAUNDRY - 136**
3/8" = 1'-0"

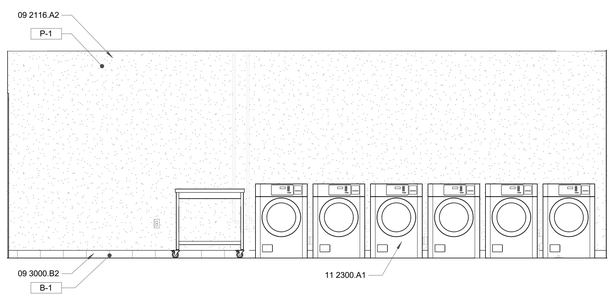

A4 **ICE/VENDING - 135 & GUEST LAUNDRY - 136**
3/8" = 1'-0"

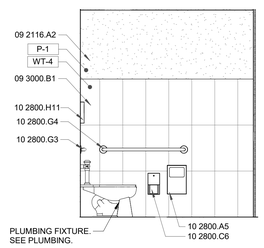

A2 **STAFF RESTROOM - 125**
3/8" = 1'-0"

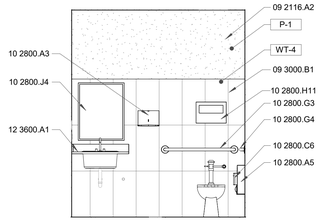

A1 **STAFF RESTROOM - 125**
3/8" = 1'-0"

*REFER TO INTERIOR DESIGN PLANS FOR ADDITIONAL INFORMATION

*REFER TO INTERIOR DESIGN PLANS FOR ADDITIONAL INFORMATION

STAMP

STATE OF NEW MEXICO
DYRON V. MURPHY
No. 3713
11/3/2023
REGISTERED ARCHITECT

DYRON MURPHY ARCHITECTS, P.C.

4505 Montbel Place NE, Albuquerque, New Mexico 87107

SHIPROCK PINNACLE HOTEL & RESTAURANT

SHIPROCK, NEW MEXICO

100% CONSTRUCTION DOCUMENTS

ISSUED FOR CONSTRUCTION

NOVEMBER 3, 2023

PROJECT NUMBER	DRAWN BY	PROJ MGR
2022.10	ACR	RI

INTERIOR ELEVATIONS - HOTEL

Sheet Title

Sheet Number

A407

C:\Revit Local\Shiprock Pinnacle_Hotel_dbe8bouch_dm-architects_cam.rvt
11/6/2023 9:09:09 AM
DYRON MURPHY ARCHITECTS, P.C.

GENERAL NOTES

A. ALL DIMENSIONS ARE TO FACE OF STUD UNLESS OTHERWISE NOTED.
B. CONTRACTOR SHALL PROVIDE BLOCKING AT ALL LOCATIONS OF WALL ATTACHMENTS, WALL HUNG CABINETS, SHELVING, ACCESSORIES AND HARDWARE.
C. CONTRACTOR SHALL PROVIDE BLOCKING AT ALL LOCATIONS FOR OWNER PROVIDED EQUIPMENT, COORDINATE WITH OWNER.
D. CONTRACTOR SHALL REFER TO INTERIOR DRAWINGS FOR ALL FINISHES INCLUDING MATERIALS, COLORS AD PATTERNS.
E. CONTRACTOR SHALL COORDINATE ACCESSORY MOUNTING TYPE WITH LOCATIONS SHOWN ON PLAN.
F. AT ACCESSIBLE SINKS AND COUNTERTOPS ENSURE ALL EQUIPMENT INCLUDING BUT NOT LIMITED TO PIPING, INSULATION, GARBAGE DISPOSAL EQUIPMENT ETC. DO NOT INTERFERE WITH UNDER COUNTER WHEELCHAIR ACCESSIBILITY.
G. PROVIDE GROMMETS AT ALL WORKSTATIONS/CASEWORK LOCATIONS, WHERE DATA AND POWER IS PROVIDED UNDER THE CASEWORK.
H. PROVIDE FILLER SPACES AT ALL OPEN CORNERS, BOTTOMS AND ALL VOIDS AT ALL CASEWORK LOCATIONS.
I. PROVIDE LAMINATE BASE AT ALL CASEWORK LOCATIONS PER SELECTION BY ARCHITECT.

KEYED NOTES

04 2300.A1	GLASS BLOCK
06 4100.A1	PLASTIC LAMINATE CASEWORK
06 4100.A2	PLASTIC LAMINATE BASE CABINET
08 1113.A1	HOLLOW METAL DOOR AND FRAME
08 1416.A1	FLUSH WOOD DOOR
09 2116.A2	5/8" GYPSUM BOARD
09 3000.A1	CERAMIC TILE
09 3000.A2	CERAMIC TILE BASE
09 3000.B1	PORCELAIN TILE
10 2113.D1	SOLID PHENOLIC TOILET COMPARTMENT
10 2800.A5	SANITARY NAPKIN DISPOSAL UNIT
10 2800.C3	SURFACE MOUNTED TOILET TISSUE DISPENSER
10 2800.G3	36" GRAB BAR
10 2800.G4	42" GRAB BAR
10 2800.H11	TOILET SEAT COVER DISPENSER
10 2800.H12	BABY CHANGING STATION
10 2800.J3	FIXED ANGLE MIRROR
10 2800.J4	MIRROR
10 4400.A1	FIRE EXTINGUISHER
12 3600.A1	SOLID SURFACE COUNTERTOP
12 3600.B1	COUNTERTOP, SEE FINISH SCHEDULE

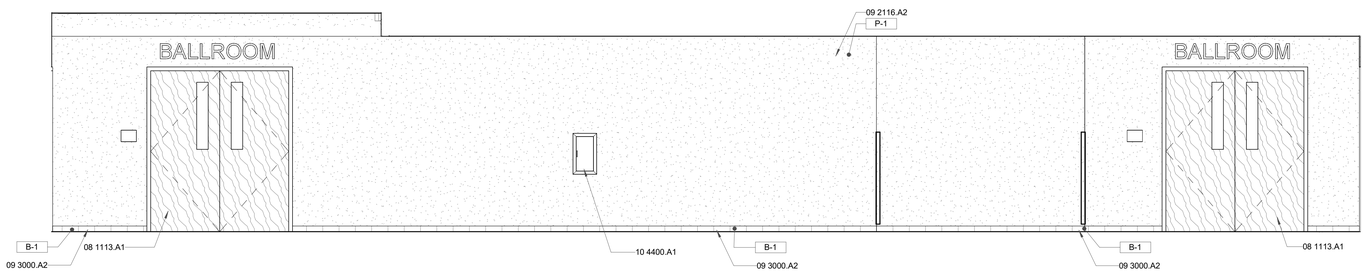

C6 **CORRIDOR - 510**
3/8" = 1'-0"

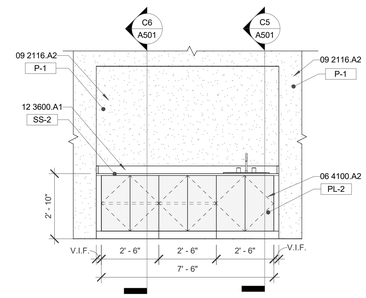

C2 **LARGE BALLROOM - 509**
3/8" = 1'-0"

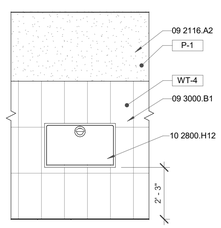

B6 **WOMEN - 504**
3/8" = 1'-0"

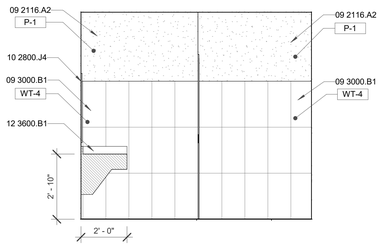

B5 **WOMEN - 504**
3/8" = 1'-0"

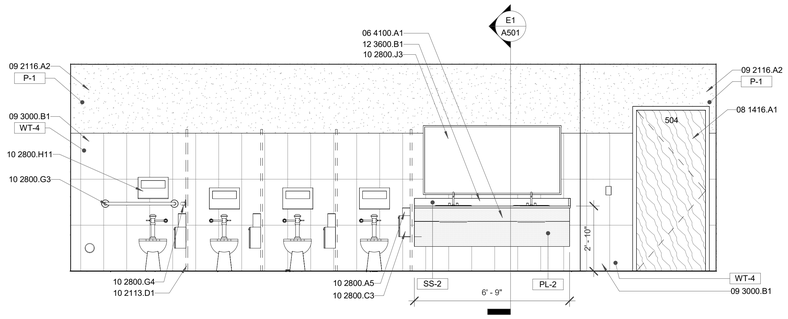

B4 **WOMEN - 504**
3/8" = 1'-0"

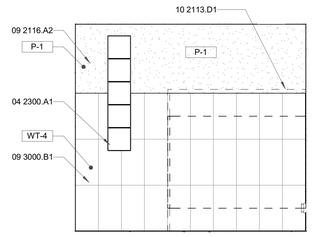

B1 **WOMEN - 504**
3/8" = 1'-0"

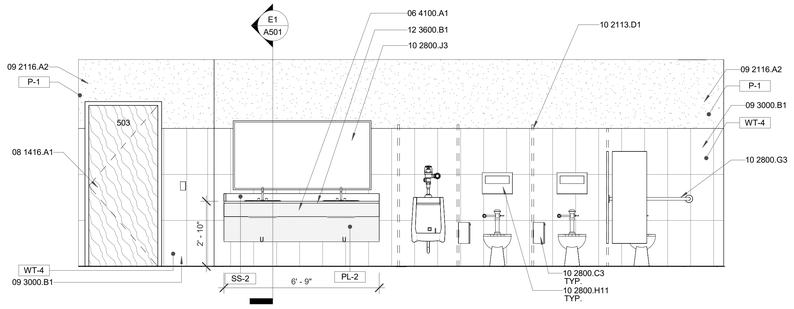

A6 **MEN - 503**
3/8" = 1'-0"

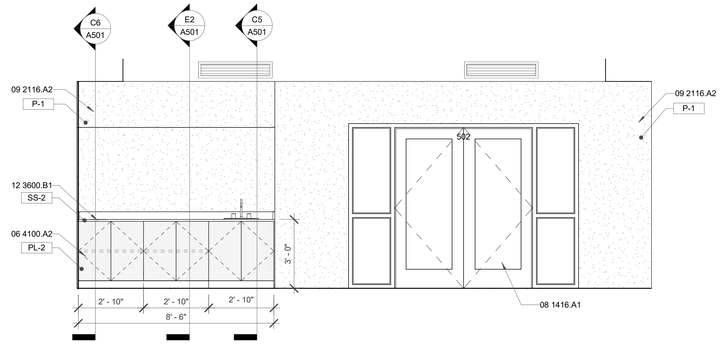

A3 **BOARDROOM - 502**
3/8" = 1'-0"

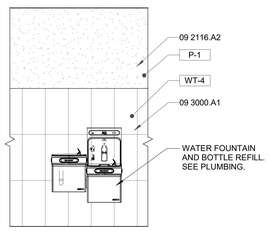

A1 **CORRIDOR - 501**
3/8" = 1'-0"

*REFER TO INTERIOR DESIGN PLANS FOR ADDITIONAL INFORMATION

*REFER TO INTERIOR DESIGN PLANS FOR ADDITIONAL INFORMATION

STAMP

STATE OF NEW MEXICO
DYRON V. MURPHY
No. 3713
11/3/2023
REGISTERED ARCHITECT

DYRON MURPHY ARCHITECTS, P.C.
4505 Montbel Place NE, Albuquerque, New Mexico 87107

SHIPROCK PINNACLE HOTEL & RESTAURANT

SHIPROCK, NEW MEXICO

100% CONSTRUCTION DOCUMENTS

ISSUED FOR CONSTRUCTION

NOVEMBER 3, 2023

PROJECT NUMBER	DRAWN BY	PROJ MGR
2022.10	Author	Designer

INTERIOR ELEVATIONS - RESTAURANT

Sheet Title

Sheet Number of

A408

11/6/2023 10:19:13 AM C:\Revit Local\Shiprock Pinnacle_Restaurant_dkirkbush_dm-architects_cem.rvt
DYRON MURPHY ARCHITECTS, P.C.

GENERAL NOTES

A. ALL DIMENSIONS ARE TO FACE OF STUD UNLESS OTHERWISE NOTED.
B. CONTRACTOR SHALL PROVIDE BLOCKING AT ALL LOCATIONS OF WALL ATTACHMENTS, WALL HUNG CABINETS, SHELVING, ACCESSORIES AND HARDWARE.
C. CONTRACTOR SHALL PROVIDE BLOCKING AT ALL LOCATIONS FOR OWNER PROVIDED EQUIPMENT, COORDINATE WITH OWNER.
D. CONTRACTOR SHALL REFER TO INTERIOR DRAWINGS FOR ALL FINISHES INCLUDING MATERIALS, COLORS AD PATTERNS.
E. CONTRACTOR SHALL COORDINATE ACCESSORY MOUNTING TYPE WITH LOCATIONS SHOWN ON PLAN.
F. AT ACCESSIBLE SINKS AND COUNTERTOPS ENSURE ALL EQUIPMENT INCLUDING BUT NOT LIMITED TO PIPING, INSULATION, GARBAGE DISPOSAL EQUIPMENT ETC. DO NOT INTERFERE WITH UNDER COUNTER WHEELCHAIR ACCESSIBILITY.
G. PROVIDE GROMMETS AT ALL WORKSTATIONS/CASEWORK LOCATIONS, WHERE DATA AND POWER IS PROVIDED UNDER THE CASEWORK.
H. PROVIDE FILLER SPACES AT ALL OPEN CORNERS, BOTTOMS AND ALL VOIDS AT ALL CASEWORK LOCATIONS.
I. PROVIDE LAMINATE BASE AT ALL CASEWORK LOCATIONS PER SELECTION BY ARCHITECT.

KEYED NOTES

06 4100.A2	PLASTIC LAMINATE BASE CABINET
06 4100.A3	PLASTIC LAMINATE WALL CABINET
06 4100.A4	PLASTIC LAMINATE COVERED SHELVES
06 4100.A5	PLASTIC LAMINATE DRAWERS
06 4100.C3	STEEL STANDARDS W/ BRACKETS
08 1416.A1	FLUSH WOOD DOOR
09 2116.A2	5/8" GYPSUM BOARD
09 3000.B1	PORCELAIN TILE
09 5100.A1	SUSPENDED ACOUSTICAL CEILING TILE SYSTEM
09 6500.A1	RUBBER BASE
10 2601.A1	CORNER GUARD
10 2800.A5	SANITARY NAPKIN DISPOSAL UNIT
10 2800.C3	SURFACE MOUNTED TOILET TISSUE DISPENSER
10 2800.G3	36" GRAB BAR
10 2800.G4	42" GRAB BAR
10 2800.H4	MOP AND BROOM HOLDER
10 2800.J4	MIRROR
10 5100.A3	SOLID PHENOLIC LOCKERS
11 3100.A1	REFRIGERATOR
12 3600.A1	SOLID SURFACE COUNTERTOP

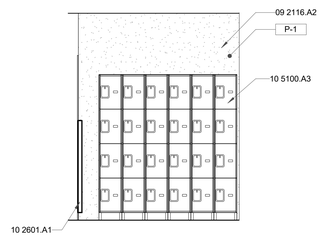

B5 **EMPLOYEE BREAKROOM - 523**
3/8" = 1'-0"

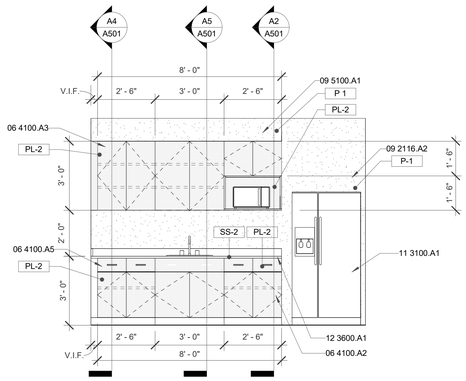

B4 **EMPLOYEE BREAKROOM - 523**
3/8" = 1'-0"

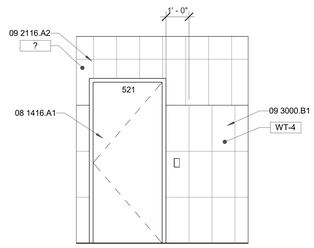

B2 **RESTROOM - 521**
3/8" = 1'-0"

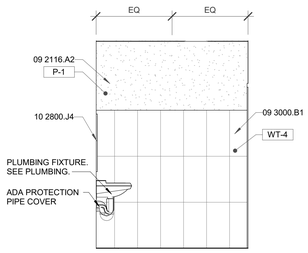

B1 **RESTROOM - 521**
3/8" = 1'-0"

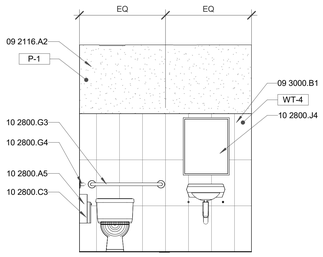

A6 **RESTROOM - 521**
3/8" = 1'-0"

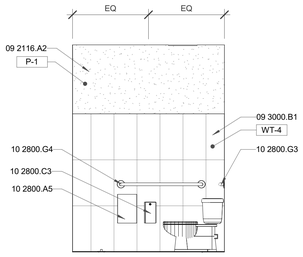

A5 **RESTROOM - 521**
3/8" = 1'-0"

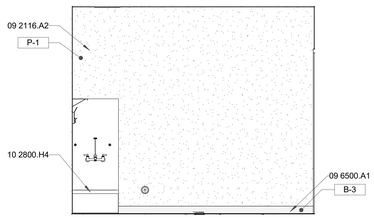

A4 **JANITOR - 519**
3/8" = 1'-0"

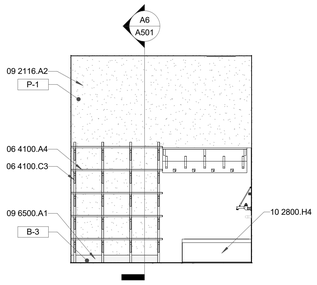

A3 **JANITOR - 519**
3/8" = 1'-0"

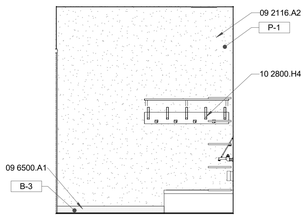

A2 **JANITOR - 513**
3/8" = 1'-0"

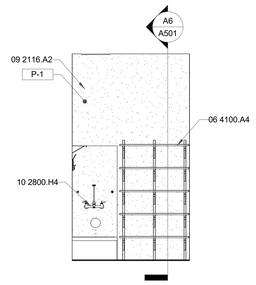

A1 **JANITOR - 513**
3/8" = 1'-0"

*REFER TO INTERIOR DESIGN PLANS FOR ADDITIONAL INFORMATION

STAMP

STATE OF NEW MEXICO
DYRON V. MURPHY
No. 3713
11/3/2023
REGISTERED ARCHITECT

DYRON MURPHY ARCHITECTS, P.C.

4505 Montbel Place NE, Albuquerque, New Mexico 87107

SHIPROCK PINNACLE HOTEL & RESTAURANT

SHIPROCK, NEW MEXICO

100% CONSTRUCTION DOCUMENTS

ISSUED FOR CONSTRUCTION

NOVEMBER 3, 2023

PROJECT NUMBER	DRAWN BY	PROJ MGR
2022.10	Author	Designer

INTERIOR ELEVATIONS - RESTAURANT

Sheet Title

Sheet Number of

A409

*REFER TO INTERIOR DESIGN PLANS FOR ADDITIONAL INFORMATION

11/3/2023 5:27:12 PM C:\Revit Local\Shiprock Pinnacle_Restaurant_dkelbaugh_pw-architects_cen.rvt
DYRON MURPHY ARCHITECTS, P.C.

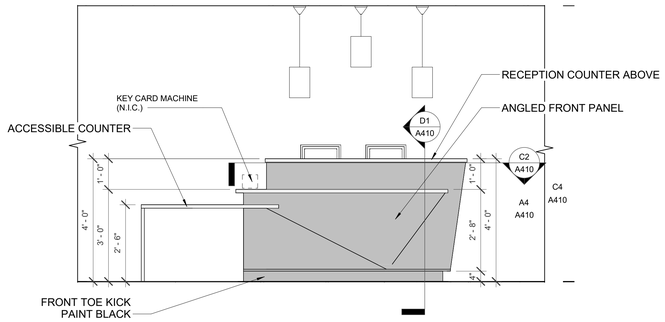

D6 **CASEWORK - RECEPTION - FRONT ELEVATION**
1/2" = 1'-0"

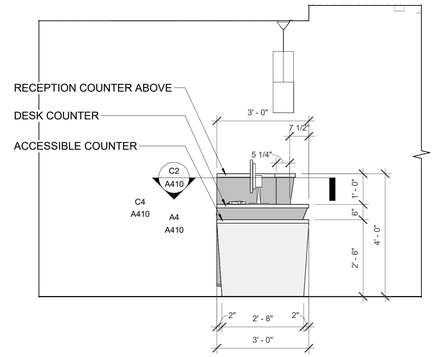

D4 **CASEWORK - RECEPTION - LEFT ELEVATION**
1/2" = 1'-0"

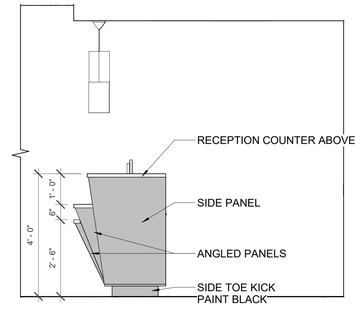

D3 **CASEWORK - RECEPTION - RIGHT ELEVATION**
1/2" = 1'-0"

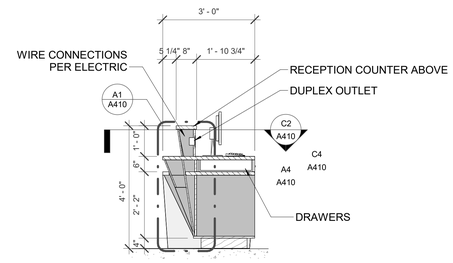

D1 **RECEPTION CASEWORK - VERTICAL SECTION**
1/2" = 1'-0"

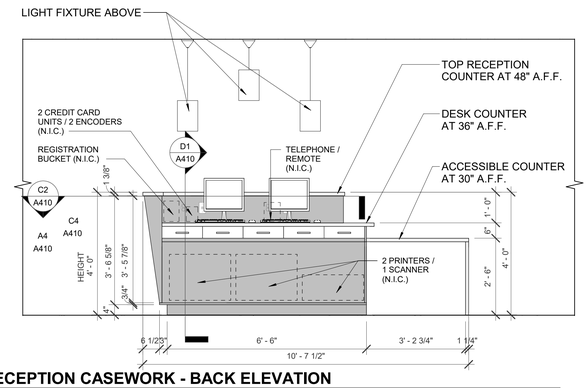

C6 **RECEPTION CASEWORK - BACK ELEVATION**
1/2" = 1'-0"

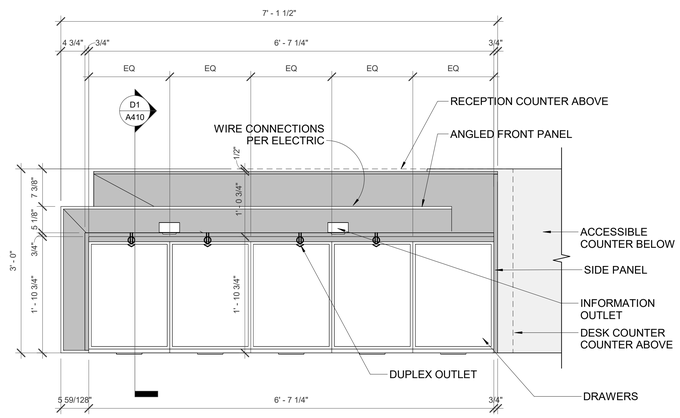

C4 **RECEPTION CASEWORK - HORIZONTAL SECTION 3**
1" = 1'-0"

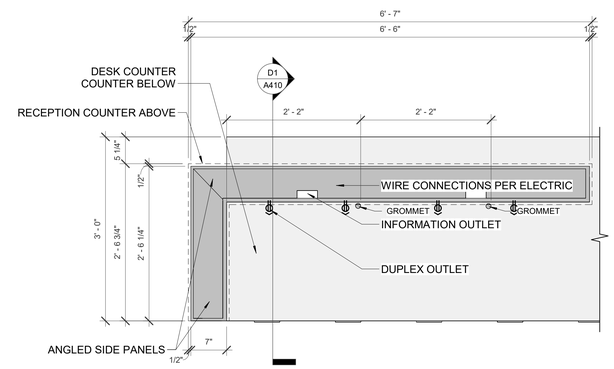

C2 **RECEPTION CASEWORK - HORIZONTAL SECTION 2**
1" = 1'-0"

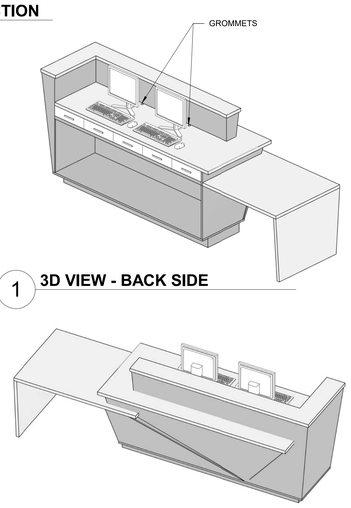

1 **3D VIEW - BACK SIDE**

C1 **3D VIEW - FRONT SIDE**

ALL REAL WOOD STAINED TO MATCH WILLSONART LAMINATE RANDOLPH FOREST 8225K-79 (PL-1)

ALL SOLID SURFACE TO BE IN CAPOGROSSI QUARTZ Q4052

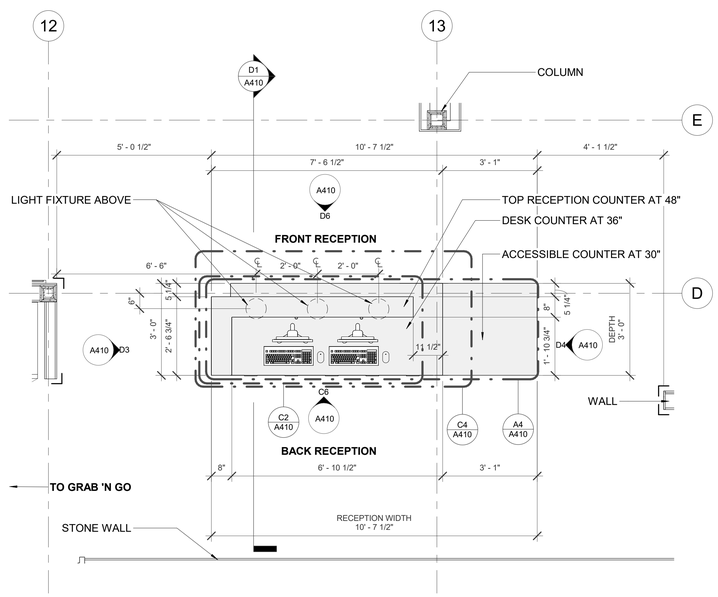

A6 **LARGE SCALE PLAN - RECEPTION CASEWORK**
1/2" = 1'-0"

MODEL IS DISPLAYED TRANSPARENT IN THIS VIEW

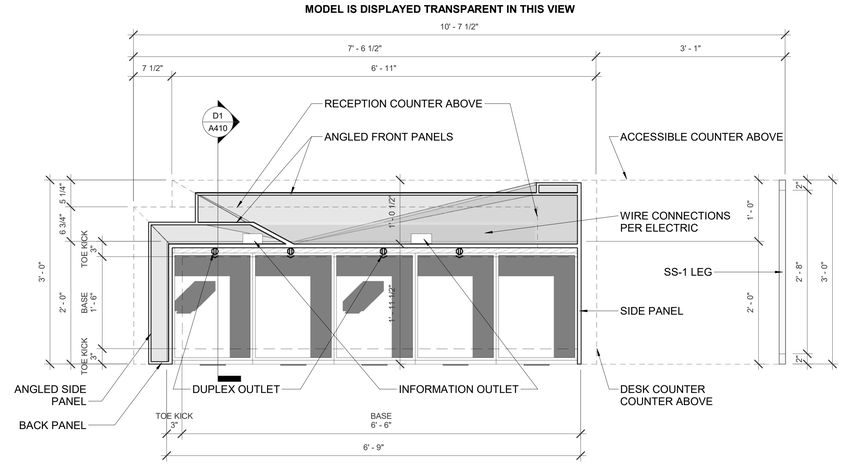

A4 **RECEPTION CASEWORK - HORIZONTAL SECTION 1**
1" = 1'-0"

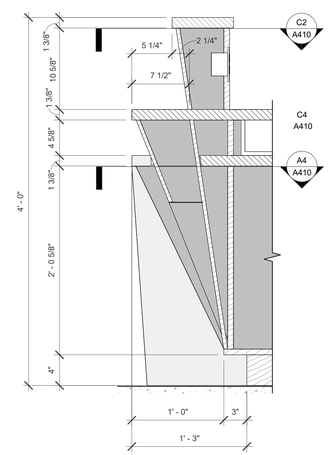

A1 **RECEPTION CASEWORK - VERTICAL SECTION**
1 1/2" = 1'-0"

STAMP

STATE OF NEW MEXICO
DYRON V. MURPHY
No. 3713
REGISTERED ARCHITECT
11/3/2023

DYRON MURPHY ARCHITECTS, P.C.

4505 Montbel Place NE, Albuquerque, New Mexico 87107

SHIPROCK PINNACLE HOTEL & RESTAURANT

SHIPROCK, NEW MEXICO

100% CONSTRUCTION DOCUMENTS

ISSUED FOR CONSTRUCTION

NOVEMBER 3, 2023

PROJECT NUMBER	DRAWN BY	PROJ MGR
2022.10	ACR	RI

CASEWORK RECEPTION DETAILS

Sheet Title

Sheet Number

A410

of

11/6/2023 9:11:44 AM C:\Revit Local\Shiprock Pinnacle_Hotel_dfe8bxxh_dm-architects_cam.rvt
DYRON MURPHY ARCHITECTS, P.C.

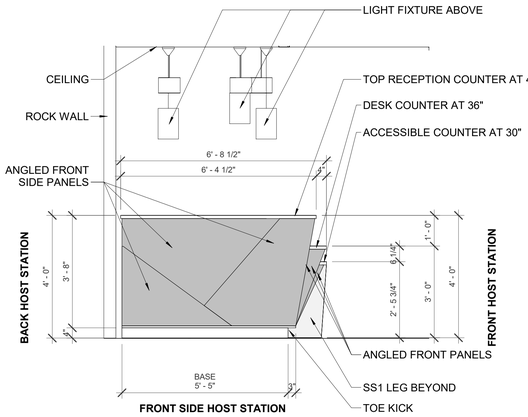

D6 **HOST STATION FRONT SIDE ELEVATION**
1/2" = 1'-0"

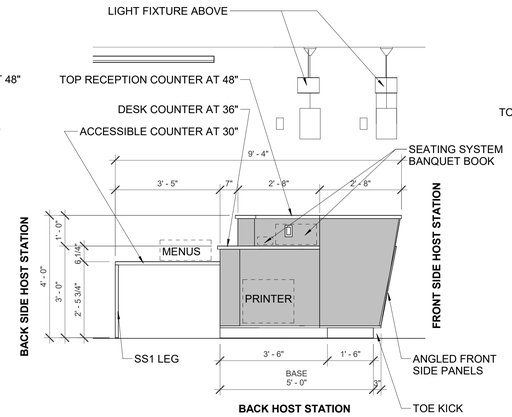

D4 **HOST STATION BACK ELEVATION**
1/2" = 1'-0"

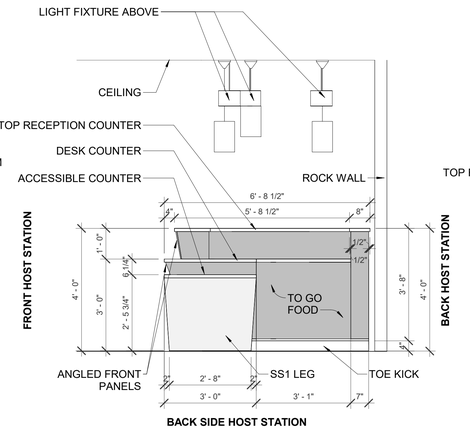

D3 **HOST STATION BACK SIDE ELEVATION**
1/2" = 1'-0"

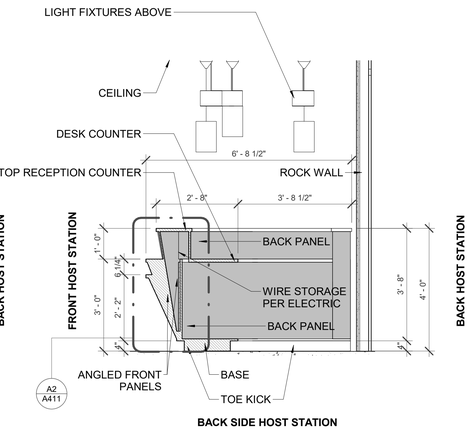

D2 **CASEWORK - HOST STATION - VERTICAL SECTION 1**
1/2" = 1'-0"

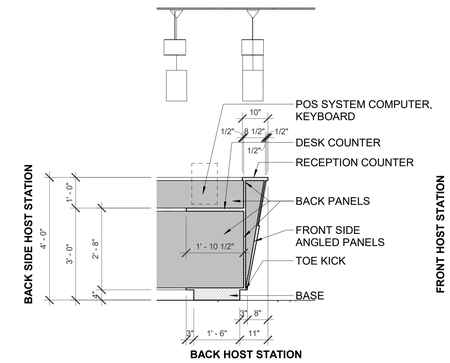

D1 **CASEWORK - HOST STATION - VERTICAL SECTION 2**
1/2" = 1'-0"

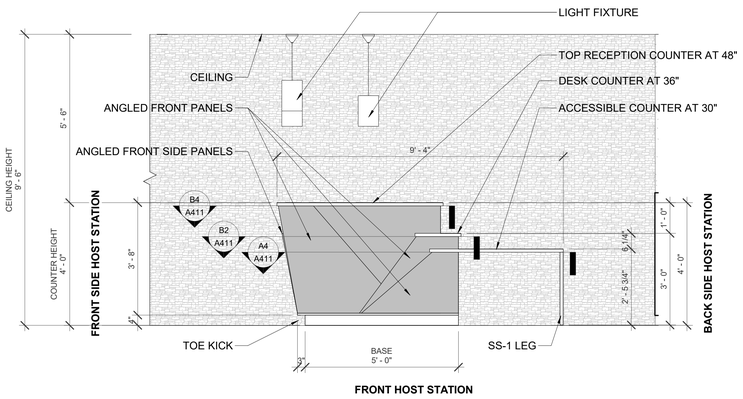

B6 **HOST STATION FRONT ELEVATION**
1/2" = 1'-0"

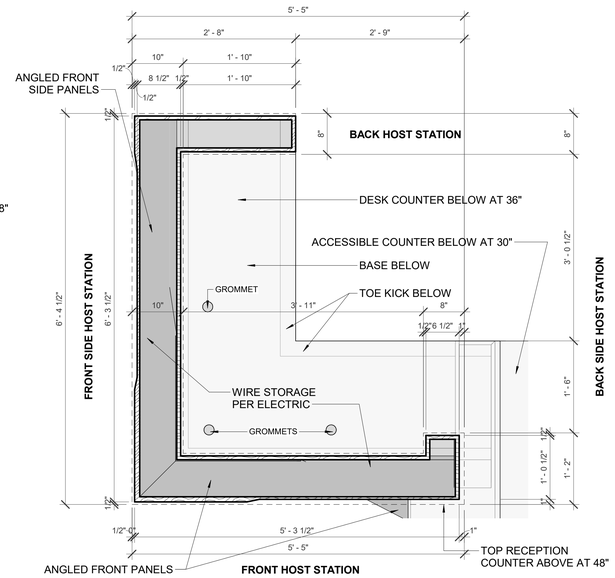

B4 **CASEWORK - HOST STATION - HORIZONTAL SECTION 3**
1" = 1'-0"

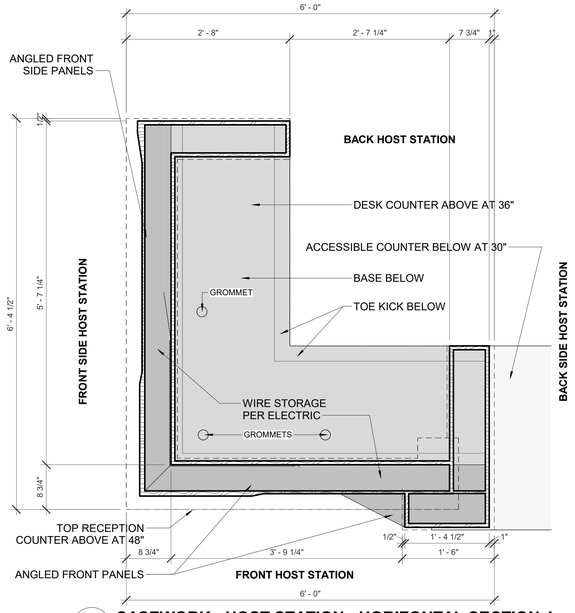

B2 **CASEWORK - HOST STATION - HORIZONTAL SECTION 4**
1" = 1'-0"

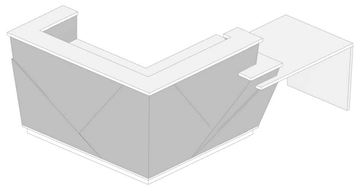

C1 **3D VIEW - FRONT SIDE**

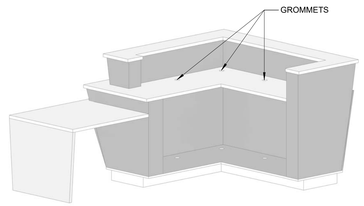

B1 **3D VIEW - BACK SIDE**

MODEL IS DISPAYED TRANSPARENT IN VIEWS A4, B2,B4

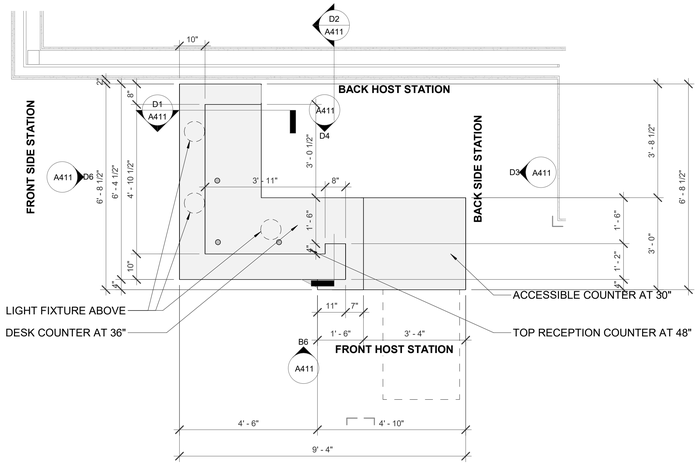

A6 **HOST STATION FLOOR PLAN**
1/2" = 1'-0"

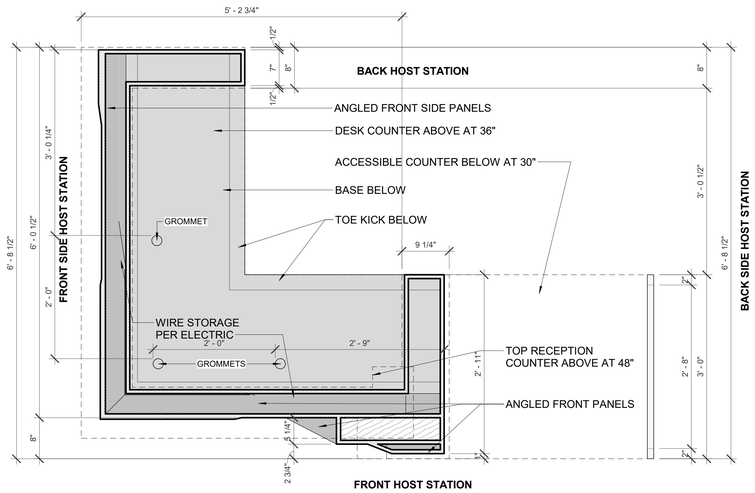

A4 **CASEWORK - HOST STATION - HORIZONTAL SECTION 5**
1" = 1'-0"

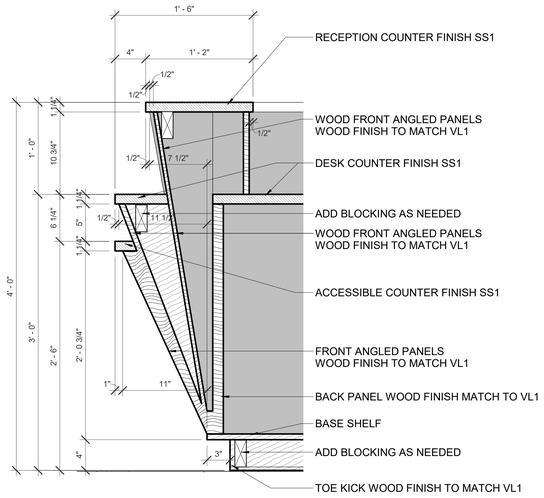

A2 **CASEWORK - HOST STATION - VERTICAL SECTION 1 - Callout 1**
1 1/2" = 1'-0"

ALL REAL WOOD STAINED TO MATCH WILLSONART LAMINATE RANDOLPH FOREST 8225K-79 (PL-1)

ALL SOLID SURFACE TO BE IN CAPOGROSSI QUARTZ Q4052 (SS-1)

STAMP

STATE OF NEW MEXICO
DYRON V. MURPHY
No. 3713
11/3/2023
REGISTERED ARCHITECT

DYRON MURPHY ARCHITECTS, P.C.
4505 Montbel Place NE, Albuquerque, New Mexico 87107

SHIPROCK PINNACLE HOTEL & RESTAURANT

SHIPROCK, NEW MEXICO

100% CONSTRUCTION DOCUMENTS

ISSUED FOR CONSTRUCTION

NOVEMBER 3, 2023

PROJECT NUMBER	DRAWN BY	PROJ MGR
2022.10	ACR	RI

CASEWORK HOST STATION DETAILS

Sheet Title

Sheet Number of

A411

C:\Revit Local\Shiprock Pinnacle_Restaurant_detbhoch_jim-architects_cen.rvt
11/3/2023 5:30:05 PM
DYRON MURPHY ARCHITECTS, P.C.

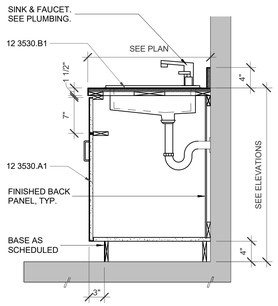

E4 **TYPICAL CASEWORK**
1" = 1'-0"

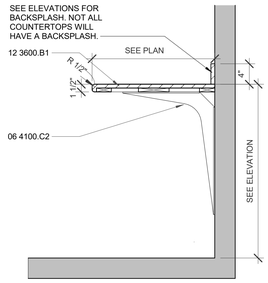

E3 **TYPICAL CASEWORK**
1" = 1'-0"

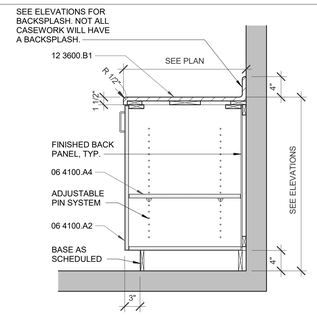

E2 **TYPICAL CASEWORK**
1" = 1'-0"

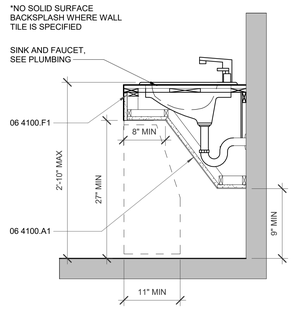

E1 **COUNTER WITH SINK AND APRON**
1" = 1'-0"

KEYED NOTES

06 1000.B2	1/2" PLYWOOD SHEATHING
06 1000.G4	2X WOOD BLOCKING/NAILER
06 4100.A1	PLASTIC LAMINATE CASEWORK
06 4100.A2	PLASTIC LAMINATE BASE CABINET
06 4100.A3	PLASTIC LAMINATE WALL CABINET
06 4100.A4	PLASTIC LAMINATE COVERED SHELVES
06 4100.A5	PLASTIC LAMINATE DRAWERS
06 4100.C2	STEEL BRACKET
06 4100.C3	STEEL STANDARDS W/ BRACKETS
06 4100.F1	COUNTERTOP, SEE FINISH SCHEDULE
12 3530.A1	BASE CABINET
12 3530.B1	COUNTERTOP AS SCHEDULED
12 3600.A1	SOLID SURFACE COUNTERTOP
12 3600.B1	COUNTERTOP, SEE FINISH SCHEDULE

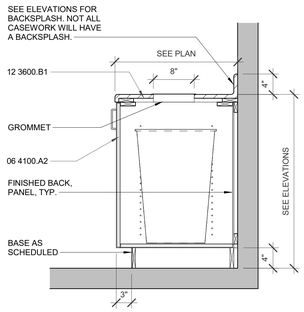

C6 **TYPICAL CASEWORK**
1" = 1'-0"

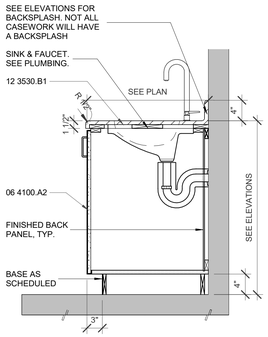

C5 **TYPICAL CASEWORK**
1" = 1'-0"

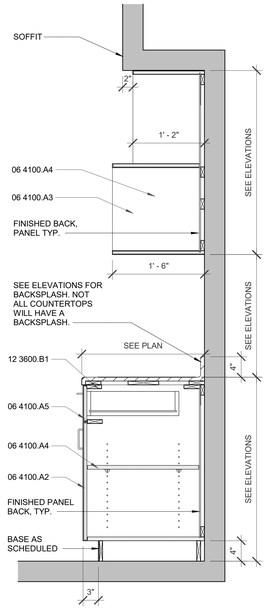

C4 **TYPICAL CASEWORK**
1" = 1'-0"

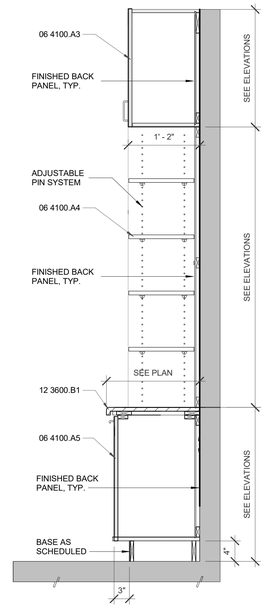

C3 **SALES DISPLAY**
1" = 1'-0"

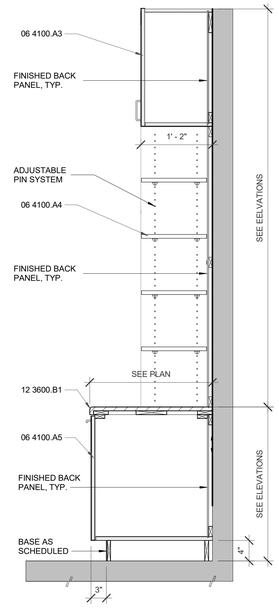

C2 **GRAB N GO**
1" = 1'-0"

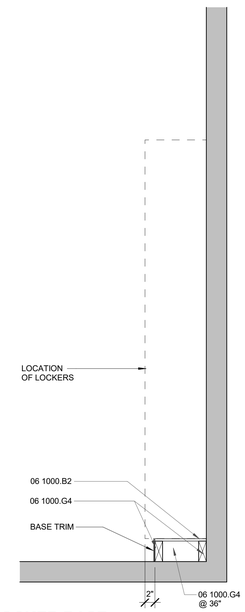

C1 **LOCKER BASE**
1" = 1'-0"

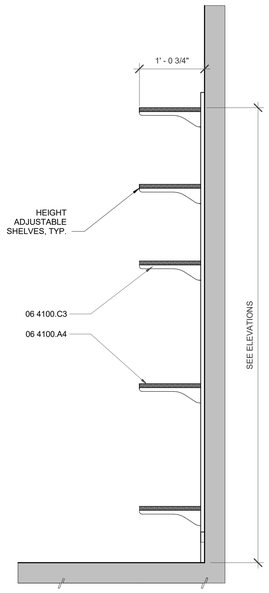

A6 **WALL MOUNTED SHELVES**
1" = 1'-0"

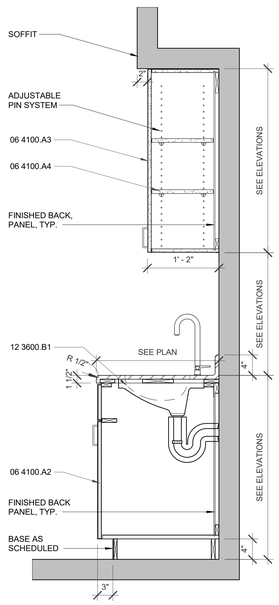

A5 **TYPICAL CASEWORK**
1" = 1'-0"

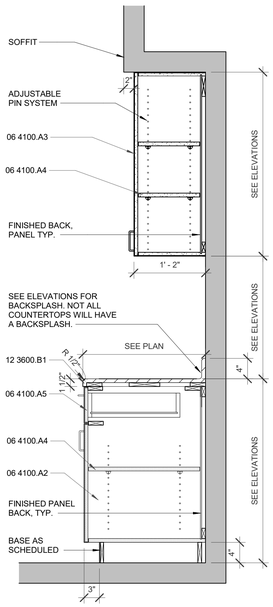

A4 **TYPICAL CASEWORK**
1" = 1'-0"

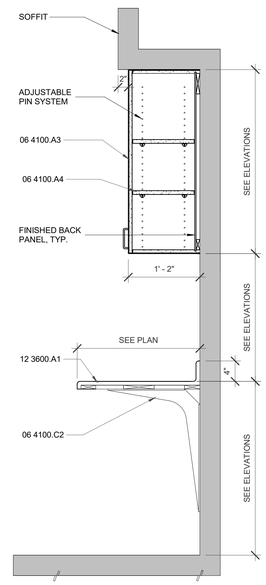

A3 **TYPICAL CASEWORK COUNTER W/UPPER CABINETS**
1" = 1'-0"

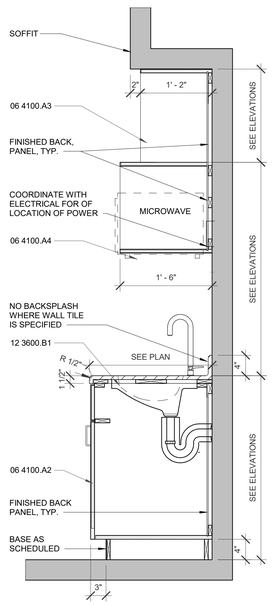

A2 **TYPICAL CASEWORK**
1" = 1'-0"

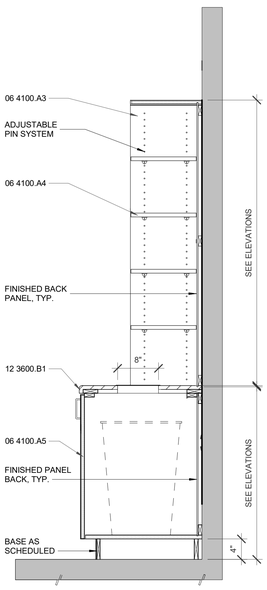

A1 **TOWEL STATION**
1" = 1'-0"

STAMP

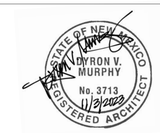

DYRON MURPHY ARCHITECTS, P.C.

4505 Montbel Place NE, Albuquerque, New Mexico 87107

SHIPROCK PINNACLE HOTEL & RESTAURANT

SHIPROCK, NEW MEXICO

100% CONSTRUCTION DOCUMENTS

ISSUED FOR CONSTRUCTION

NOVEMBER 3, 2023

PROJECT NUMBER	DRAWN BY	PROJ MGR
2022.10	Author	Designer

CASEWORK SECTIONS

Sheet Title

Sheet Number of

A501

C:\Revit Local\Shiprock Pinnacle_Hotel_dbelbusch_dm-architects_cen.rvt
11/6/2023 8:04:06 AM
DYRON MURPHY ARCHITECTS, P.C.

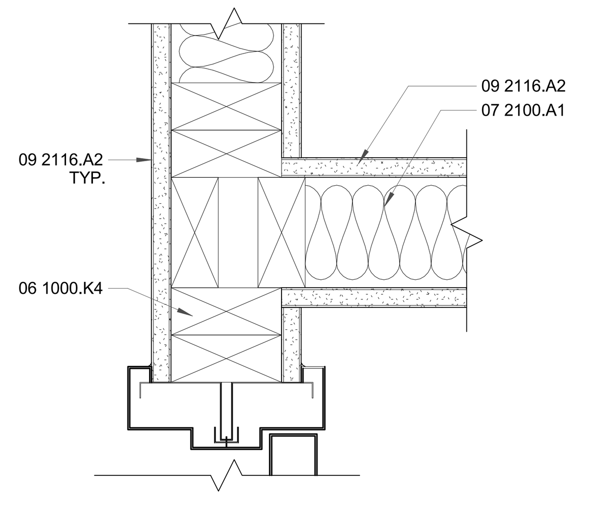

E5 **INTERIOR DOOR JAMB AT INTERSECTION**
3" = 1'-0"

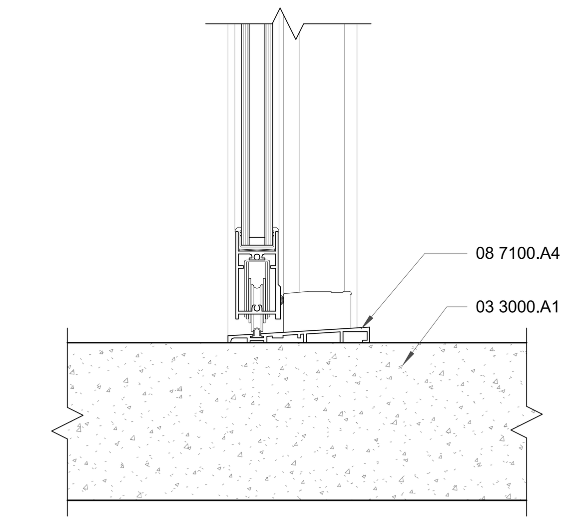

E4 **INTERIOR DOOR SILL - ALUMINUM SLIDER**
3" = 1'-0"

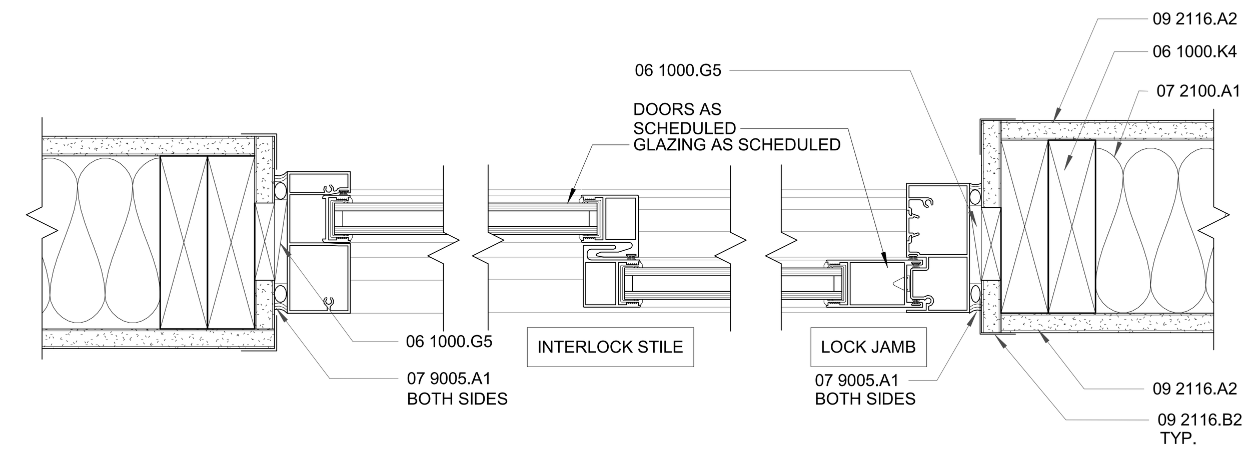

E3 **INTERIOR DOOR JAMB - ALUMINUM SLIDER**
3" = 1'-0"

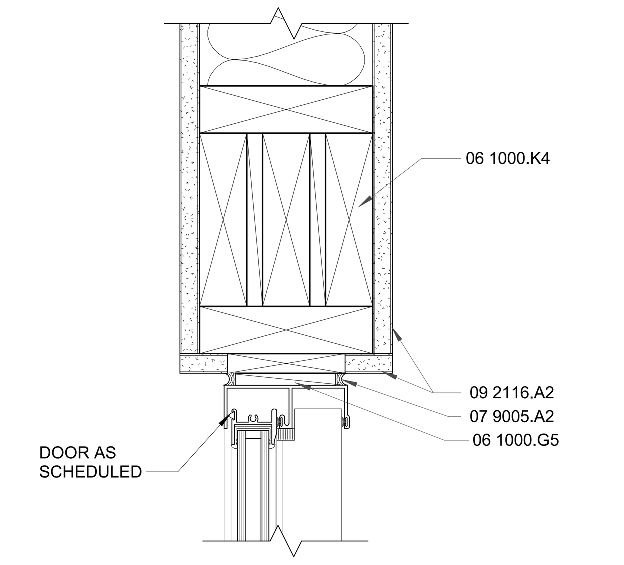

E1 **INTERIOR DOOR HEAD - ALUMINUM SLIDER**
3" = 1'-0"

KEYED NOTES

03 3000.A1	CONCRETE SLAB
03 3000.D1	1/2" EXPANSION CONTROL JOINT FILLER STRIP
06 1000.D1	OSB SHEATHING
06 1000.G5	WOOD SHIM
06 1000.K4	WOOD STUD FRAMING, SEE STRUCTURAL
07 2100.A1	BATT INSULATION
07 2400.A1	EXTERIOR INSULATION AND FINISH SYSTEM
07 2400.B1	EIFS INSULATION BOARD
07 2400.C1	SEALANT
07 2500.A1	WEATHER BARRIER
07 6200.A5	METAL FLASHING
07 9005.A1	CONTINUOUS JOINT SEALANT BEAD W/ BACKER ROD
07 9005.A2	SEALANT, CONTINUOUS
08 1113.A1	HOLLOW METAL DOOR AND FRAME
08 1113.A2	HOLLOW METAL FRAME
08 1113.B1	METAL FRAME CLIP ANCHOR
08 1113.B2	JAMB ANCHOR, 3 PER JAMB, U.N.O.
08 1113.C1	GROUT
08 1116.A1	ALUMINUM FRAME AND DOOR
08 4313.A2	ALUMINUM FRAMED STOREFRONT DOOR
08 7100.A4	DOOR THRESHOLD
09 2116.A2	5/8" GYPSUM BOARD
09 2116.B2	GYPSUM BOARD CORNER BEAD
09 2116.F1	1/2" GLASS-MAT FACED GYPSUM SHEATHING BOARD
09 2216.C1	FURRING CHANNEL
32 1300.A1	CONCRETE SIDEWALK
32 1300.B2	1/2" EXPANSION JOINT

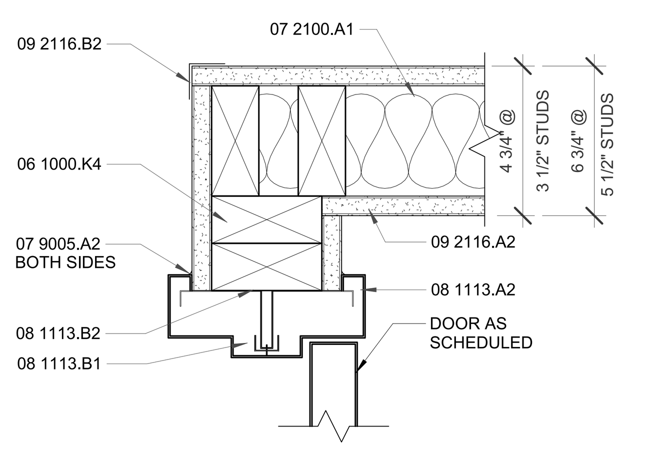

D6 **INTERIOR DOOR JAMB AT CORNER**
3" = 1'-0"

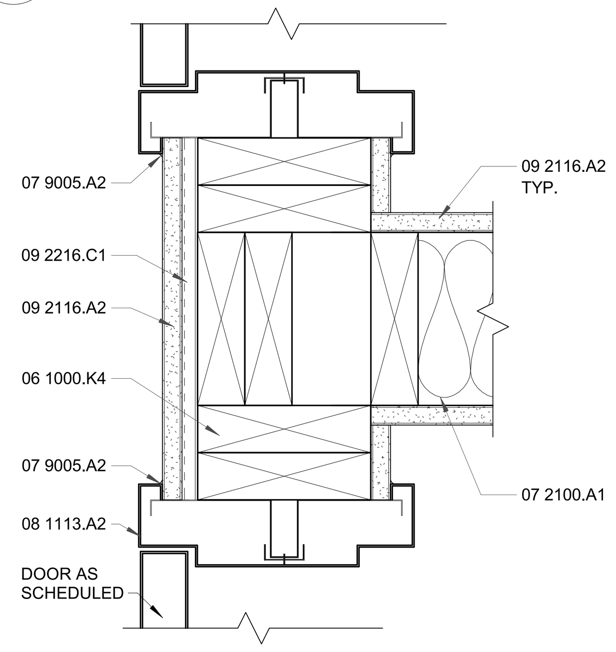

D5 **INTERIOR DOOR JAMB AT INTERSECTION - 1 HOUR**
3" = 1'-0"

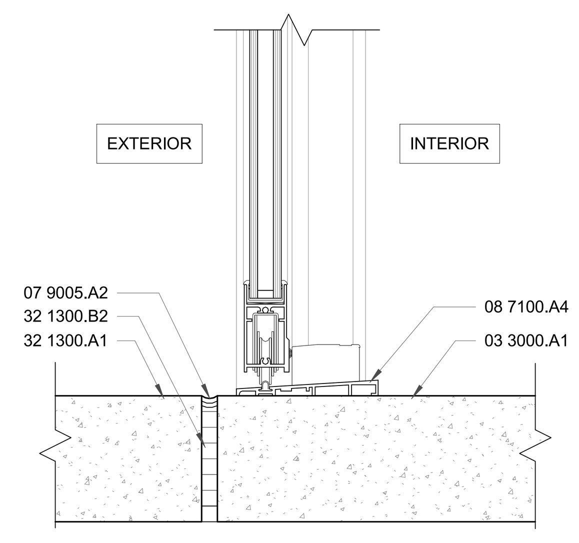

D4 **EXTERIOR DOOR SILL - ALUMINUM SLIDER**
3" = 1'-0"

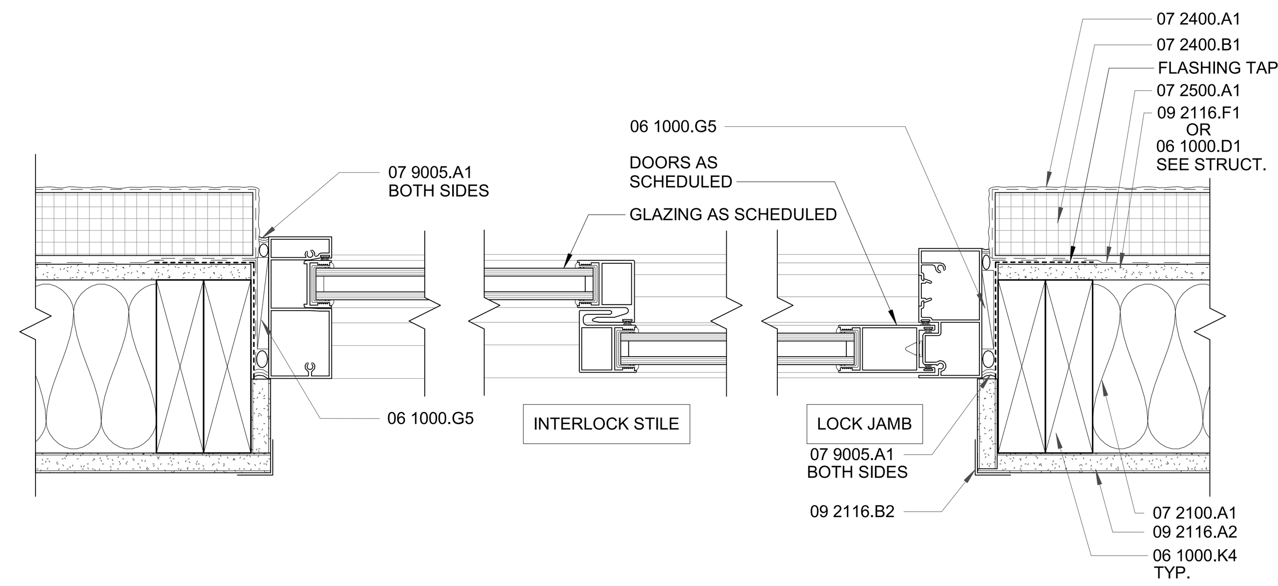

D3 **EXTERIOR DOOR JAMB - ALUMINUM SLIDER**
3" = 1'-0"

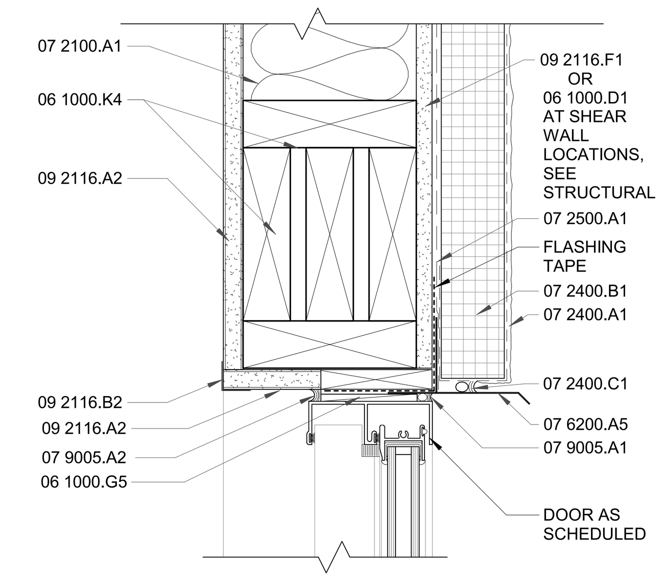

D1 **EXTERIOR DOOR HEAD - ALUMINUM SLIDER**
3" = 1'-0"

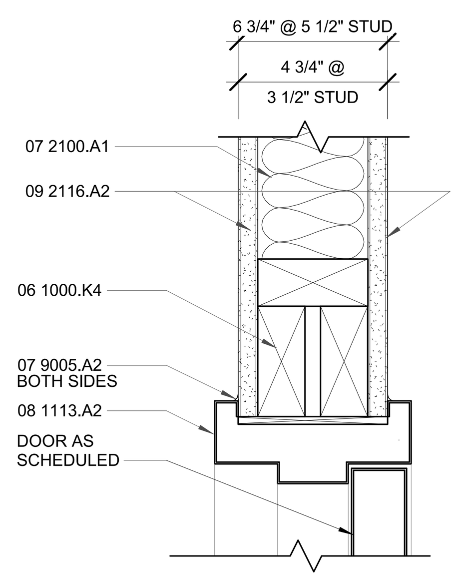

C6 **INTERIOR DOOR HEAD - HOLLOW METAL**
3" = 1'-0"

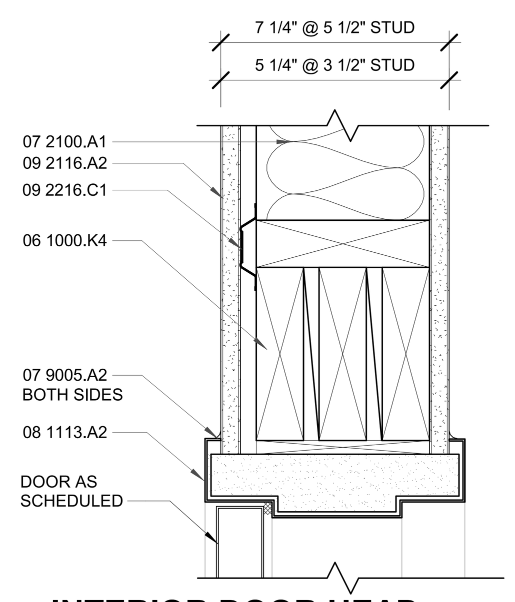

C5 **INTERIOR DOOR HEAD HOLLOW METAL - 1 HOUR**
3" = 1'-0"

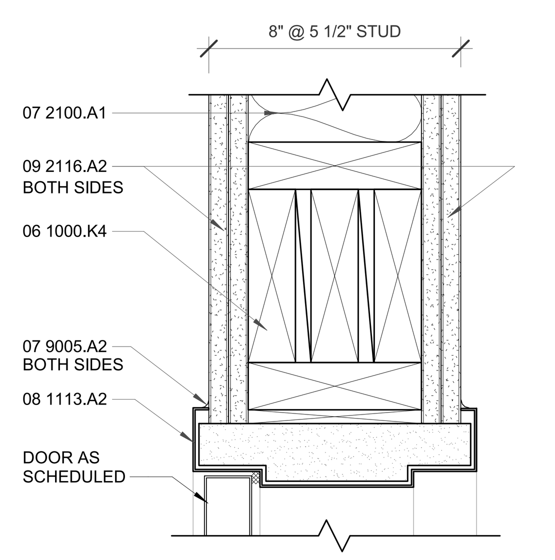

C4 **INTERIOR DOOR HEAD HOLLOW METAL - 2 HOUR**
3" = 1'-0"

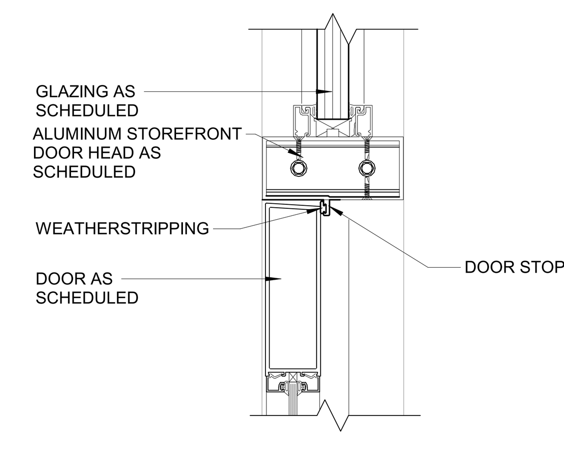

C3 **STOREFRONT MULLION DOOR HEAD - ALUMINUM**
3" = 1'-0"

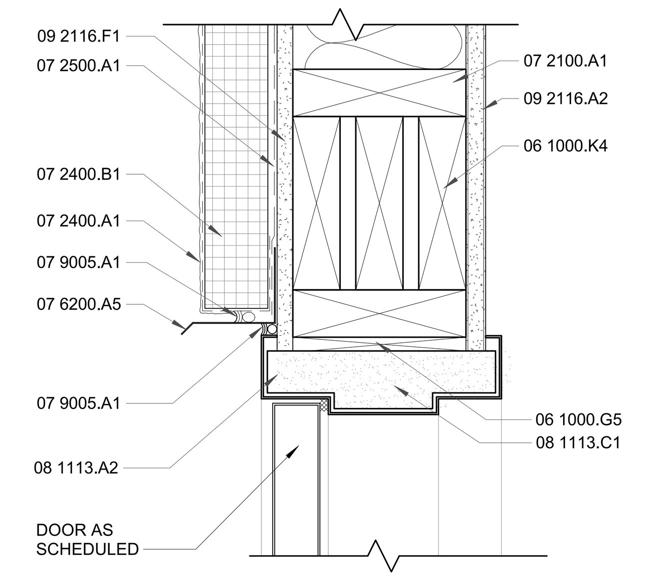

C2 **EXTERIOR DOOR HEAD - HOLLOW METAL**
3" = 1'-0"

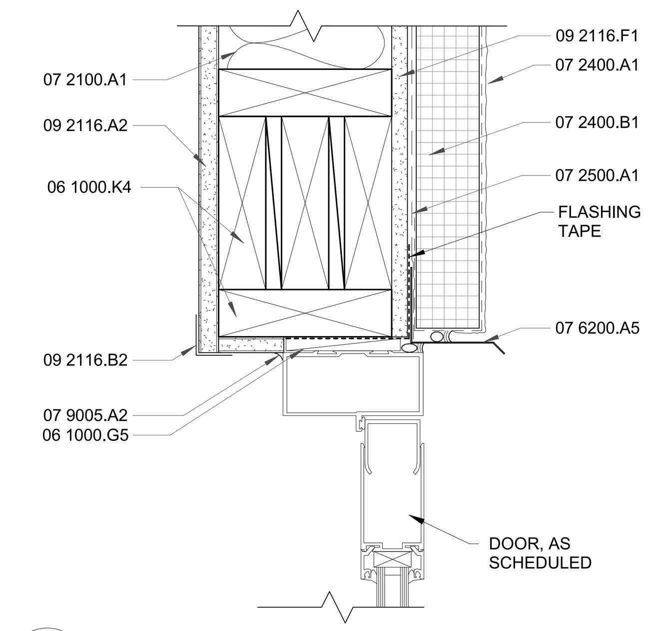

C1 **EXTERIOR DOOR HEAD-ALUMINUM**
3" = 1'-0"

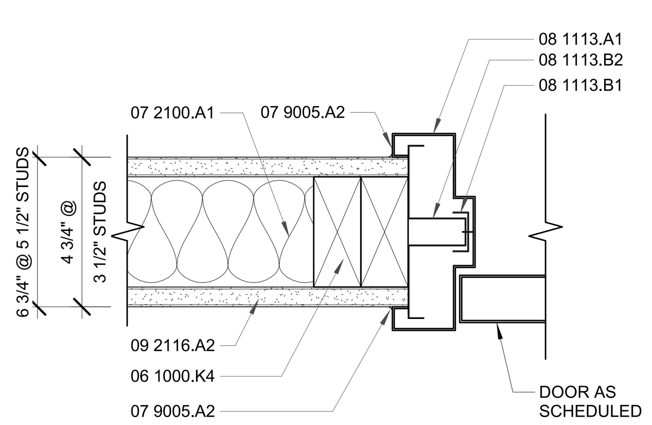

B6 **INTERIOR DOOR JAMB - HOLLOW METAL**
3" = 1'-0"

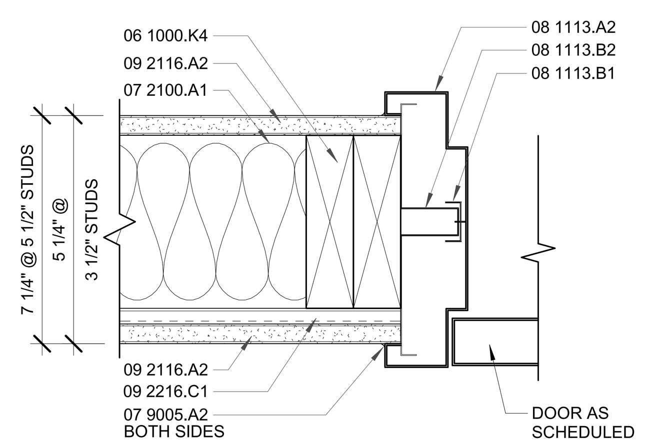

B5 **INTERIOR DOOR JAMB HOLLOW METAL - 1 HOUR**
3" = 1'-0"

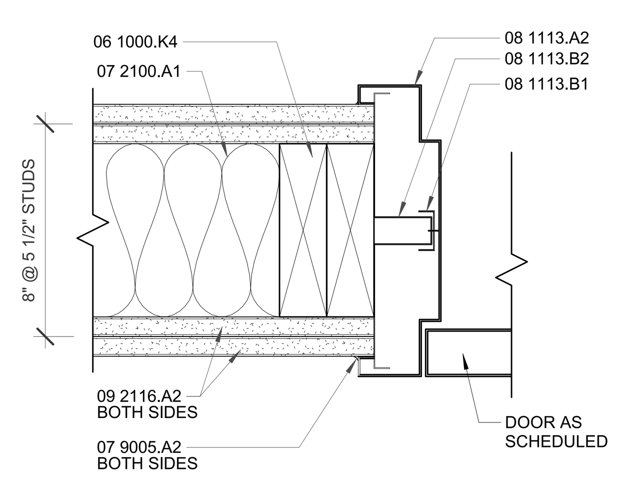

B4 **INTERIOR DOOR JAMB HOLLOW METAL - 2 HOUR**
3" = 1'-0"

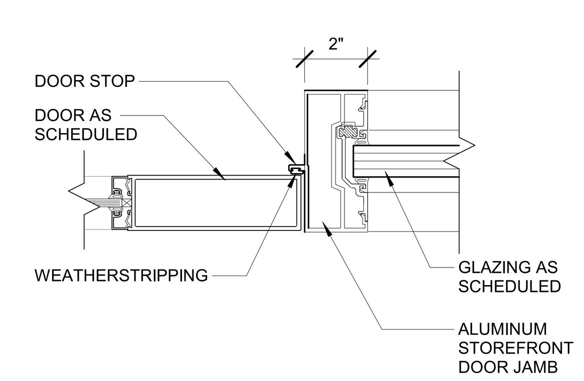

B3 **STOREFRONT MULLION DOOR JAMB - ALUMINUM**
3" = 1'-0"

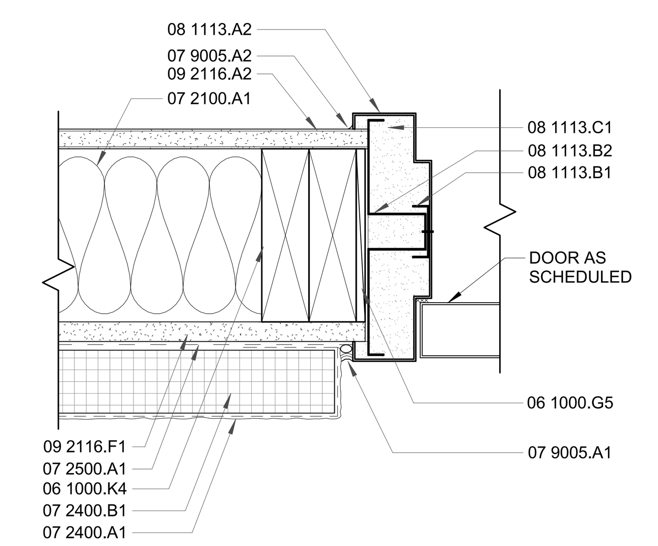

B2 **EXTERIOR DOOR JAMB - HOLLOW METAL**
3" = 1'-0"

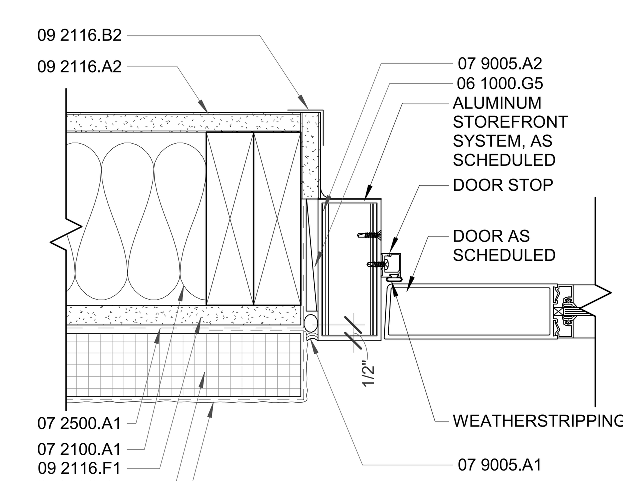

B1 **EXTERIOR DOOR JAMB-ALUMINUM**
3" = 1'-0"

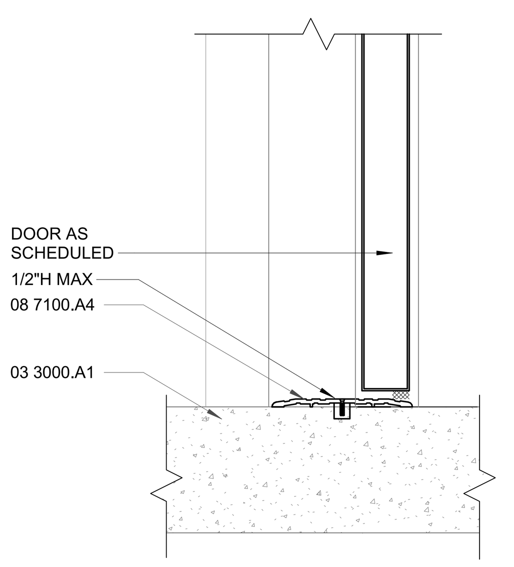

A6 **INTERIOR DOOR THRESHOLD HOLLOW METAL**
3" = 1'-0"

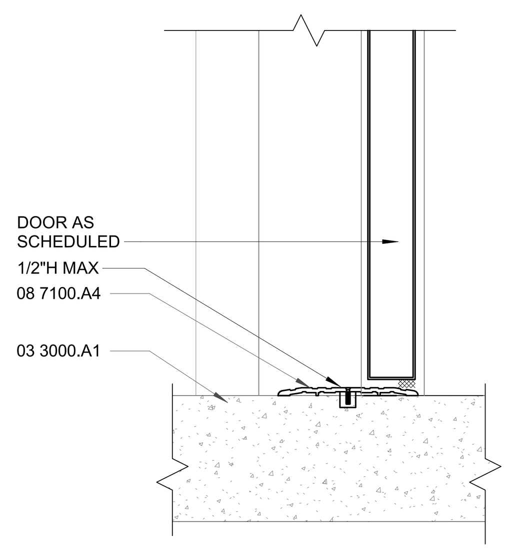

A5 **INTERIOR DOOR THRESHOLD HOLLOW METAL - 1 HOUR**
3" = 1'-0"

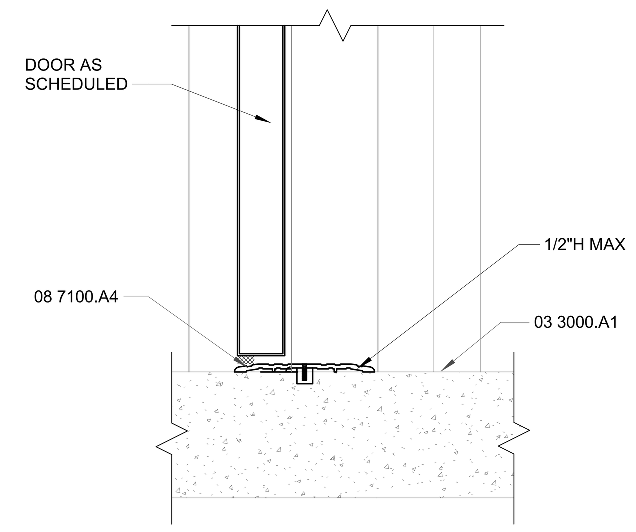

A4 **INTERIOR DOOR THRESHOLD HOLLOW METAL - 2 HOUR**
3" = 1'-0"

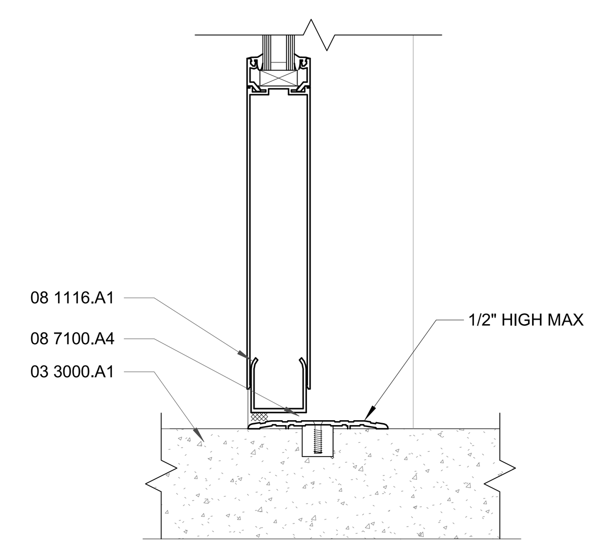

A3 **INTERIOR DOOR THRESHOLD - ALUMINUM**
3" = 1'-0"

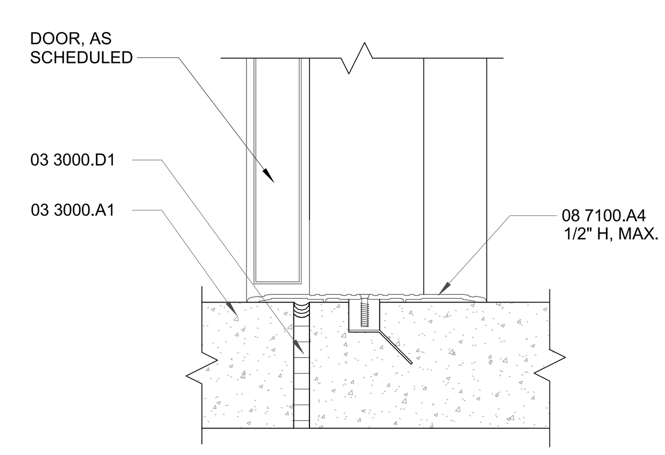

A2 **EXTERIOR DOOR THRESHOLD - HOLLOW METAL**
3" = 1'-0"

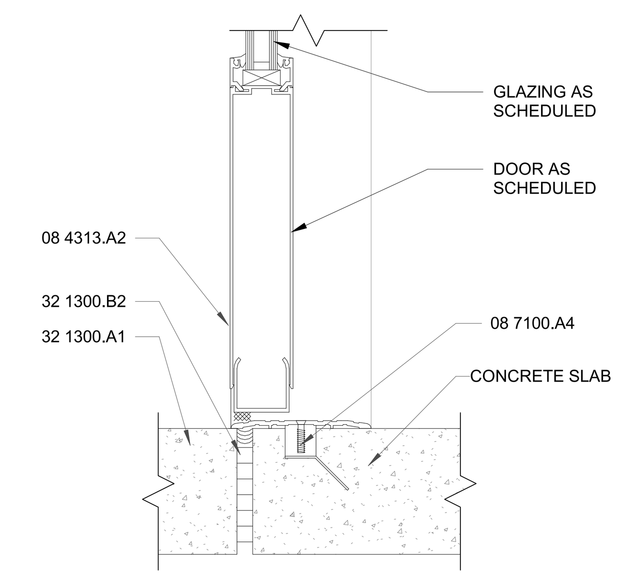

A1 **EXTERIOR DOOR THRESHOLD - ALUMINUM**
3" = 1'-0"

STAMP

DYRON V. MURPHY No. 3713 11/3/2023 STATE OF NEW MEXICO REGISTERED ARCHITECT

DYRON MURPHY ARCHITECTS, P.C.
4505 Montbel Place NE, Albuquerque, New Mexico 87107

SHIPROCK PINNACLE HOTEL & RESTAURANT

SHIPROCK, NEW MEXICO

100% CONSTRUCTION DOCUMENTS

ISSUED FOR CONSTRUCTION

NOVEMBER 3, 2023

PROJECT NUMBER	DRAWN BY	PROJ MGR
2022.10	Author	Designer

DOOR DETAILS

Sheet Title

Sheet Number of

A502

11/6/2023 8:04:15 AM C:\Revit Locals\Shiprock Pinnacle_Hotel_dfeldbusch_dm-architects_com.rvt DYRON MURPHY ARCHITECTS, P.C.

KEYED NOTES

03 3000.A1	CONCRETE SLAB
03 3000.A6	GYPCRETE TOPPING, SEE STRUCTURAL
06 1000.A1	WOOD HEADER, SEE STRUCTURAL
06 1000.B1	PLYWOOD SHEATHING
06 1000.D1	OSB SHEATHING
06 1000.G5	WOOD SHIM
06 1000.H1	TREATED WOOD BLOCKING
06 1000.J3	WOOD STUD FRAMING, NON-STRUCTURAL
06 1000.K4	WOOD STUD FRAMING, SEE STRUCTURAL
07 2100.A1	BATT INSULATION
07 2100.F1	RIGID INSULATION BOARD
07 2400.A1	EXTERIOR INSULATION AND FINISH SYSTEM
07 2400.B1	EIFS INSULATION BOARD
07 2500.A1	WEATHER BARRIER
07 6200.A5	METAL FLASHING
07 9005.A1	CONTINUOUS JOINT SEALANT BEAD W/ BACKER ROD
07 9005.A2	SEALANT, CONTINUOUS
08 1113.D1	HOLLOW METAL FRAMED WINDOW
08 4313.A1	ALUMINUM FRAMED STOREFRONT
08 4313.A3	ALUMINUM FRAMED STOREFRONT WINDOW
08 4500.A2	TRANSLUCENT WINDOW PANEL
09 2116.A2	5/8" GYPSUM BOARD
09 2116.B2	GYPSUM BOARD CORNER BEAD
09 2116.F1	1/2" GLASS-MAT FACED GYPSUM SHEATHING BOARD
32 1300.A1	CONCRETE SIDEWALK
32 1300.B2	1/2" EXPANSION JOINT

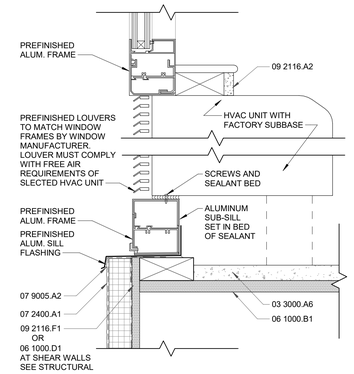

D3 **EXTERIOR WINDOW SILL - GUEST ROOM PTAC**
3" = 1'-0"

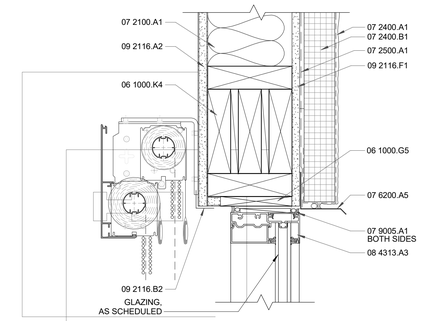

D1 **EXTERIOR WINDOW HEAD - ALUMINUM**
3" = 1'-0"

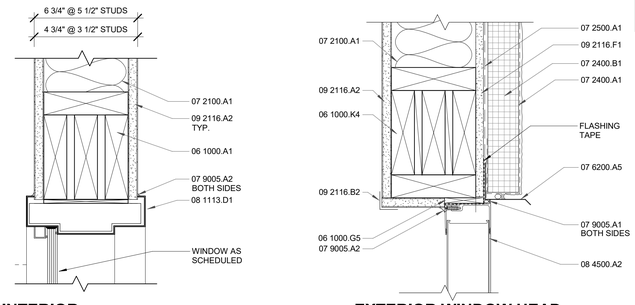

C2 **EXTERIOR WINDOW HEAD TRANSLUCENT PANEL**
3" = 1'-0"

C1 **EXTERIOR WINDOW HEAD - ALUMINUM**
3" = 1'-0"

C3 **INTERIOR WINDOW HEAD- HOLLOW METAL**
3" = 1'-0"

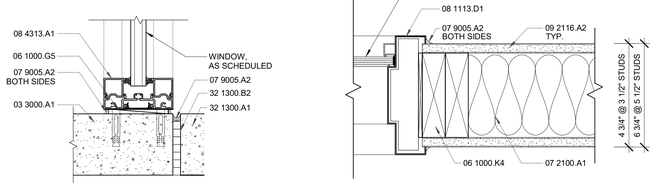

B3 **INTERIOR WINDOW JAMB- HOLLOW METAL**
3" = 1'-0"

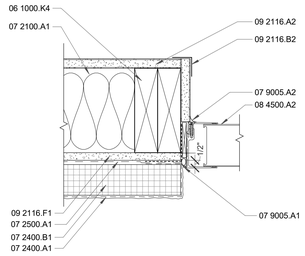

B2 **EXTERIOR WINDOW JAMB TRANSLUCENT PANEL**
3" = 1'-0"

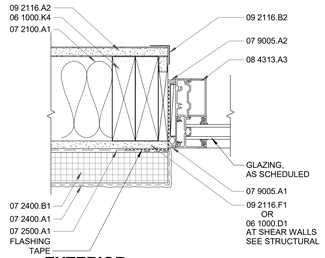

B1 **EXTERIOR WINDOW JAMB - ALUMINUM**
3" = 1'-0"

B4 **EXTERIOR STOREFRONT ALUMINUM AT SIDEWALK**
3" = 1'-0"

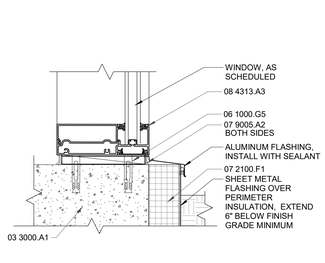

A4 **EXTERIOR STOREFRONT SILL - ALUMINUM AT GRADE**
3" = 1'-0"

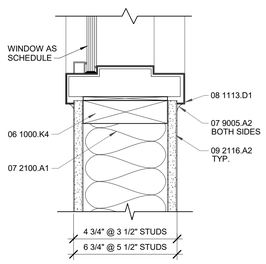

A3 **INTERIOR WINDOW SILL - HOLLOW METAL**
3" = 1'-0"

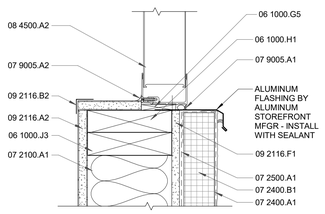

A2 **EXTERIOR WINDOW SILL TRANSLUCENT PANEL**
3" = 1'-0"

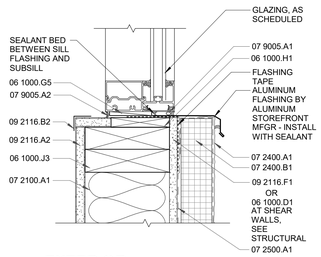

A1 **EXTERIOR WINDOW SILL - ALUMINUM**
3" = 1'-0"

STAMP

STATE OF NEW MEXICO
DYRON V. MURPHY
No. 3713
11/3/2023
REGISTERED ARCHITECT

DYRON MURPHY ARCHITECTS, P.C.

4505 Montbel Place NE, Albuquerque, New Mexico 87107

SHIPROCK PINNACLE HOTEL & RESTAURANT

SHIPROCK, NEW MEXICO

100% CONSTRUCTION DOCUMENTS

ISSUED FOR CONSTRUCTION

NOVEMBER 3, 2023

PROJECT NUMBER	DRAWN BY	PROJ MGR
2022.10	Author	Designer

WINDOW DETAILS

Sheet Title

Sheet Number

A503

of

11/6/2023 8:54:21 AM C:\Revit Local\Shiprock Pinnacle_Hotel_Brelbaum_dmarchitects_central.rvt
DYRON MURPHY ARCHITECTS, P.C.

HOTEL - 1ST FLOOR DOOR SCHEDULE

		DOOR AND FRAME											DETAILS - SHEET A502			
	NAME	WIDTH	HEIGHT	THICKNESS	ELEVATION	DOOR MATERIAL	DOOR GLAZING	FRAME MATERIAL	FRAME GLAZING	FIRE RATING	HARDWARE SET	ELEC. HARDWARE	HEAD	JAMB	SILL	REMARKS
110a	VESTIBULE #1	6' - 8 1/2"	7' - 0"	1 3/4"	9	AL	TG	AL	-	-	39.0	Yes	D1	D3	D4	AUTOMATIC SLIDING DOOR
110b	VESTIBULE #1	6' - 8 1/2"	7' - 0"	1 3/4"	9	AL	TG	AL	-	-	39.0	Yes	E1	E3	E4	AUTOMATIC SLIDING DOOR
112	LOBBY	6' - 8 1/2"	7' - 0"	1 3/4"	9	AL	TG	AL	-	-	39.0	Yes	D1	D3	D4	AUTOMATIC SLIDING DOOR
116	HOUSE KEEPING EXECUTIVE	3' - 0"	7' - 0"	1 3/4"	5	WD	-	HM	-	-	26.0		C5	B5	A5	
117	GM OFFICE	3' - 0"	7' - 0"	1 3/4"	4	HM	-	HM	-		24.0		C5	B5	A5	
118	CHUTE ROOM	4' - 0"	7' - 0"	1 3/4"	24	WD	-	HM	-	-	26.0		C3	B3	A3	WITH MIWA LOCKS ALV2 RFID CARD LOCK SYSTEM
119	CHUTE	3' - 0"	7' - 0"	1 3/4"	4	HM	-	HM	-	90 MIN.	32.00		C4	B4	A4	
120	LAUNDRY	3' - 0"	7' - 0"	1 3/4"	4	HM	-	HM	-	-	14.0	Yes	C5	B5	A5	
121	MECHANICAL	3' - 0"	7' - 0"	1 3/4"	4	HM	-	HM	-	-	20.0		C5	B5	A5	
122	DRYERS	2' - 0"	6' - 8"	1 3/4"	10	HM	-	HM	-	-	19.0		C5	B5	A5	
124	PBX	3' - 0"	7' - 0"	1 3/4"	4	HM	-	HM	-	-	20.0		C5	B5	A5	
125	STAFF RESTROOM	3' - 0"	7' - 0"	1 3/4"	4	HM	-	HM	-	-	30.0		C5	B5	A5	
126	BREAKROOM	3' - 0"	7' - 0"	1 3/4"	4	HM	-	HM	-	-	26.0		C5	B5	A5	WITH MIWA LOCKS ALV2 RFID CARD LOCK SYSTEM
127	CORRIDOR #3	3' - 0"	7' - 0"	1 3/4"	7	AL	TG	AL	-	-	2.0		C1	B1	A1	WITH MIWA LOCKS ALV2 RFID CARD LOCK SYSTEM
128a	OUTDOOR MAINTENANCE EQUIPMENT	3' - 0"	7' - 0"	1 3/4"	4	HM	-	HM	-	-	14.0		C4	B4	A4	
128b	OUTDOOR MAINTENANCE EQUIPMENT	3' - 0"	7' - 0"	1 3/4"	4	HM	-	HM	-	-	7.0		C4	B4	A4	
129	FIRE SPRINKLER	4' - 0"	7' - 0"	1 3/4"	20	HM	-	HM	-	-	8.0		C1	B1	A1	
130	SEASONAL STORAGE	3' - 0"	7' - 0"	1 3/4"	4	HM	-	HM	-	-	20.0		C5	B5	A5	
133	MECHANICAL	3' - 0"	7' - 0"	1 3/4"	4	HM	-	HM	-	20 MIN.	22.0		C4	B4	A4	
134a	ELECTRICAL	3' - 0"	7' - 0"	1 3/4"	4	HM	-	HM	-	20 MIN.	23.0		C4	B4	A4	
134b	ELECTRICAL	3' - 0"	7' - 0"	1 3/4"	4	HM	-	HM	-	-	5.0		C1	B1	A1	
136	GUEST LAUNDRY	3' - 0"	7' - 0"	1 3/4"	6	WD	TG	HM	-	-	16.0		C4	B4	A4	WITH MIWA LOCKS ALV2 RFID CARD LOCK SYSTEM
137	FITNESS CENTER	3' - 0"	7' - 0"	1 3/4"	6	WD	TG	HM	-	-	16.0	Yes	C4	B4	A4	WITH MIWA LOCKS ALV2 RFID CARD LOCK SYSTEM
138	PUBLIC RESTROOM	3' - 0"	7' - 0"	1 3/4"	21	SCWD	-	HM	-	-	30.0		C5	B5	A5	
139	PUBLIC RESTROOM	3' - 0"	7' - 0"	1 3/4"	21	SCWD	-	HM	-	-	30.0		C5	B5	A5	
140	MECHANICAL	3' - 0"	7' - 0"	1 3/4"	4	HM	-	HM	-	20 MIN.	22.0		C4	B4	A4	
142	CORRIDOR #2	4' - 6"	7' - 0"	1 3/4"	8	HM	-	HM	-	60 MIN.	17.0	Yes	C4	B4	A4	MAGNETIC HOLD
143	CORRIDOR #4	3' - 0"	7' - 0"	1 3/4"	7	AL	TG	AL	-	60 MIN.	1.0		C1	B1	A1	WITH MIWA SURFACE-MOUNT CARD READER
144	STORAGE	3' - 0"	7' - 0"	1 3/4"	4	HM		HM		20 MIN.	15.0		C3	B3	A3	WITH MIWA LOCKS ALV2 RFID CARD LOCK SYSTEM
145	STAIR #2	3' - 0"	7' - 0"	1 3/4"	4	HM	-	HM	-	90 MIN.	32.00		C3	B3	A3	
146	STAIR #1	3' - 0"	7' - 0"	1 3/4"	4	HM	-	HM	-	90 MIN.	13.0		C3	B3	A3	WITH SELF-CLOSURE AND SMOKE SEAL

HOTEL - 2ND FLOOR DOOR SCHEDULE

		DOOR AND FRAME											DETAILS - SHEET A502			
NO.	NAME	WIDTH	HEIGHT	THICKNESS	ELEVATION	DOOR MATERIAL	DOOR GLAZING	FRAME MATERIAL	FRAME GLAZING	FIRE RATING	HARDWARE SET	ELEC. HARDWARE	HEAD	JAMB	SILL	REMARKS
223	LINEN	3' - 0"	7' - 0"	1 3/4"	4	HM	-	HM	-	20 MIN.	15.0	Yes	C4	B4	A4	WITH MIWA LOCKS ALV2 RFID CARD LOCK SYSTEM
225	ELEVATOR LOBBY	7' - 0"	7' - 0"	1 3/4"	23	SCWD	-	HM	-	20 MIN.	31.0	Yes	C4	B4	A4	MAGNETIC HOLD
229	STAIR #1	3' - 0"	7' - 0"	1 3/4"	4	HM	-	HM	-	90 MIN.	12.0		C3	B3	A3	WITH SELF-CLOSURE AND SMOKE SEAL
230	STAIR #2	3' - 0"	7' - 0"	1 3/4"	4	HM	-	HM	-	90 MIN.	2.0		C3	B3	A3	WITH SELF-CLOSURE AND SMOKE SEAL
231	STORAGE	3' - 0"	7' - 0"	1 3/4"	4	HM	-	HM	-	20 MIN.	15.0	Yes	C4	B4	A4	WITH MIWA LOCKS ALV2 RFID CARD LOCK SYSTEM

HOTEL - 3RD FLOOR DOOR SCHEDULE

		DOOR AND FRAME											DETAILS - SHEET A502			
NO.	NAME	WIDTH	HEIGHT	THICKNESS	ELEVATION	DOOR MATERIAL	DOOR GLAZING	FRAME MATERIAL	FRAME GLAZING	FIRE RATING	HARDWARE SET	ELEC. HARDWARE	HEAD	JAMB	SILL	REMARKS
323	LINEN	3' - 0"	7' - 0"	1 3/4"	4	HM	-	HM	-	20 MIN.	15.0	Yes	C4	B4	A4	WITH MIWA LOCKS ALV2 RFID CARD LOCK SYSTEM
325	ELEVATOR LOBBY	7' - 0"	7' - 0"	1 3/4"	23	SCWD	-	HM	-	20 MIN.	31.0	Yes	C4	B4	A4	MAGNETIC HOLD
329	STAIR #1	3' - 0"	7' - 0"	1 3/4"	4	HM	-	HM	-	90 MIN.	12.0		C3	B3	A3	WITH SELF-CLOSURE AND SMOKE SEAL
330	STAIR #2	3' - 0"	7' - 0"	1 3/4"	4	HM	-	HM	-	90 MIN.	12.0		C3	B3	A3	WITH SELF-CLOSURE AND SMOKE SEAL
331	STORAGE	3' - 0"	7' - 0"	1 3/4"	4	HM	-	HM	-	20 MIN.	15.0	Yes	C4	B4	A4	WITH MIWA LOCKS ALV2 RFID CARD LOCK SYSTEM

HOTEL - 4TH FLOOR DOOR SCHEDULE

		DOOR AND FRAME											DETAILS - SHEET A502			
NO.	NAME	WIDTH	HEIGHT	THICKNESS	ELEVATION	DOOR MATERIAL	DOOR GLAZING	FRAME MATERIAL	FRAME GLAZING	FIRE RATING	HARDWARE SET	ELEC. HARDWARE	HEAD	JAMB	SILL	REMARKS
423	LINEN	3' - 0"	7' - 0"	1 3/4"	4	HM	-	HM	-	20 MIN.	15.0	Yes	C4	B4	A4	WITH MIWA LOCKS ALV2 RFID CARD LOCK SYSTEM
425	ELEVATOR LOBBY	7' - 0"	7' - 0"	1 3/4"	23	SCWD	-	HM	-	20 MIN.	31.0	Yes	C4	B4	A4	MAGNETIC HOLD
429	STAIR #1	3' - 0"	7' - 0"	1 3/4"	4	HM	-	HM	-	90 MIN.	12.0		C3	B3	A3	WITH SELF-CLOSURE AND SMOKE SEAL
430	STAIR #2	3' - 0"	7' - 0"	1 3/4"	4	HM	-	HM	-	90 MIN.	12.0		C3	B2	A3	WITH SELF-CLOSURE AND SMOKE SEAL
431	STORAGE	3' - 0"	7' - 0"	1 3/4"	4	HM	-	HM	-	20 MIN.	15.0	Yes	C4	B4	A4	WITH MIWA LOCKS ALV2 RFID CARD LOCK SYSTEM

GUEST ROOMS - DOOR SCHEDULE

		DOOR AND FRAME											DETAILS - SHEET A502			
NO.	TYPICAL GUEST ROOM	WIDTH	HEIGHT	THICKNESS	ELEVATION	DOOR MATERIAL	DOOR GLAZING	FRAME MATERIAL	FRAME GLAZING	FIRE RATING	HARDWARE SET	ELEC. HARDWARE	HEAD	JAMB	SILL	REMARKS
TYP 1	GUEST ROOM	3' - 0"	6' - 8"	1 3/4"	1	SCWD	-	HM	-	20 MIN.	35.0	No	C3/D2	B3	A3	WITH MIWA LOCKS ALV2 RFID CARD LOCK SYSTEM
TYP 2	GUEST BATH	3' - 0"	7' - 0"	1 3/4"	2	HCWD	-	WD	-	-	37.0		C4	B4	A5	WITH MIRROR

RESTAURANT - DOOR SCHEDULE

		DOOR AND FRAME											DETAILS - SHEETS A502			
NO.	NAME	WIDTH	HEIGHT	THICKNESS	ELEVATION	DOOR MATERIAL	DOOR GLAZING	FRAME MATERIAL	FRAME GLAZING	FIRE RATING	HARDWARE SET	ELEC. HARDWARE	HEAD	JAMB	SILL	REMARKS
500a	VESTIBULE	6' - 0"	7' - 0"	1 3/4"	11	AL	TG	AL	TG		3.0		C1	B1	A1	ADA PUSH BUTTON
500b	VESTIBULE	6' - 0"	7' - 0"	1 3/4"	11	AL	TG	AL	TG		3.0		C1	B2	A2	
500c	VESTIBULE	6' - 0"	7' - 0"	1 3/4"	11	AL	TG	AL	TG		9.0		D2/C2	B2	A2	ADA PUSH BUTTON
500d	VESTIBULE	6' - 0"	7' - 0"	1 3/4"	11	AL	TG	AL	TG		9.0		D2/C2	B2	A2	
502	BOARDROOM	6' - 0"	7' - 0"	1 3/4"	14	WD	TG	HM	TG		27.0		C5	B5	A5	FROSTED GLAZING
503	MEN	3' - 0"	7' - 0"	1 3/4"	5	WD	-	HM	-		34.0		C5	B5	A5	
504	WOMEN	3' - 0"	7' - 0"	1 3/4"	5	WD	-	HM	-		34.0		C5	B5	A5	
506a	VESTIBULE	6' - 0"	7' - 0"	1 3/4"	12	AL	TG	AL	TG		3.0		C1	B1	A1	ADA PUSH BUTTON
506b	VESTIBULE	6' - 0"	7' - 0"	1 3/4"	12	AL	TG	AL	TG		9.0		C1	B1	A1	ADA PUSH BUTTON
507	RESTAURANT	3' - 0"	7' - 0"	1 3/4"	7	AL	TG	AL	-		4.0		C1	B1	A1	
508a	CORRIDOR 2	6' - 0"	7' - 0"	1"	25		TG		-		33.0		C5	B5	A5	
508b	RESTAURANT	5' - 0"	7' - 0"	1"	16											
508c	RESTAURANT	5' - 0"	7' - 0"	1"	16		TG		-		33.0		C5	B5	A5	
509a	BALLROOM	6' - 0"	7' - 0"	1 3/4"	15	WD	TG	HM	-		10.0		C5	B5	A5	
509b	BALLROOM	6' - 0"	7' - 0"	1 3/4"	15	WD	TG	HM	-		10.0		C5	B5	A5	
509c	BALLROOM	6' - 0"	7' - 0"	1 3/4"	13	AL	TG	AL	-		3.0		C1	B1	A1	
509d	BALLROOM	6' - 0"	7' - 0"	1 3/4"	13	AL	TG	AL	-		3.0		C1	B1	A1	
510a	CORRIDOR 2	6' - 0"	7' - 0"	1 3/4"	17	WD	-	HM	-		11.0		C5	B5	A5	
510b	CORRIDOR 2	6' - 0"	7' - 0"	1 3/4"	13	AL	TG	AL	-		3.0		C1	B1	A1	
511	CHAIR/TABLE STORAGE	6' - 0"	7' - 0"	1 3/4"	15	WD	TG	HM	-		18.00		C5	B5	A5	
512	LINEN STORAGE	3' - 0"	7' - 0"	1 3/4"	5	WD	-	HM	-	-	21.0		C5	B5	A5	
513	JANITORIAL	3' - 0"	7' - 0"	1 3/4"	5	WD	-	HM	-	-	20.0		C5	B5	A5	
514	OFFICE	3' - 0"	7' - 0"	1 3/4"	19	WD	-	HM	TG	-	25.0		C5	B5	A5	
515	ELECTRICAL	4' - 0"	7' - 0"	1 3/4"	21	HM	-	HM	-		5.0		C2	B2	A2	
516	MECHANICAL	4' - 0"	7' - 0"	1 3/4"	21	HM	-	HM	-		8.0		C2	B2	A2	
517	CORRIDOR 3	4' - 0"	7' - 0"	1 3/4"	20	HM	-	HM	-		6.0	Yes	C2	B2	A2	
518	OFFICE	3' - 0"	7' - 0"	1 3/4"	19	WD	-	HM	TG		24.0		C6	B6	A6	
519	JANITORIAL	3' - 0"	7' - 0"	1 3/4"	4	HM	-	HM	-		20.0		C6	B6	A6	
520	DRY STORAGE	3' - 0"	7' - 0"	1 3/4"	4	HM	-	HM	-		29.0		C6	B6	A6	
521	RESTROOM	3' - 0"	7' - 0"	1 3/4"	4	HM	-	HM	-		30.0		C6	B6	A6	
522	GENERAL STORAGE	3' - 0"	7' - 0"	1 3/4"	4	HM	-	HM	-		28.00		C6	B6	A6	
524	I.T.	3' - 0"	7' - 0"	1 3/4"	5	WD	-	HM			20.0		C6	B6	A6	

DOOR GENERAL NOTES

A. VERIFY ALL OPENING DIMENSIONS PRIOR TO FABRICATION.
B. SEE SPECIFICATIONS FOR HARDWARE SCHEDULE.
C. SEE SPECIFICATIONS FOR GLAZING SCHEDULE.
D. PROVIDE FIRE RATED GLAZING AT INTERIOR WINDOWS AS REQUIRED AT ALL LOCATIONS WHERE GLAZING IS WITHIN A FIRE RATED PARTITION. REFER TO LIFE SAFETY PLANS FOR ADDITIONAL INFORMATION.
E. TEMPER (SAFETY GLASS) ALL INNER LIGHTS FROM FINISH FLOOR TO 18" ABOVE AND WITHIN 12" OF A DOOR, TYPICAL.
F. PROVIDE BLINDS AT ALL INTERIOR AND EXTERIOR WINDOWS.
G. PROVIDE CLEAN APPLICATION OF SEALANT AROUND WINDOW AND DOOR FRAMES AT INTERIOR AND EXTERIOR SIDES. INTERIOR SEALANT BEAD WIDTH SHALL BE 1/4" WIDE, MAXIMUM. EXTERIOR SEALANT BEAD WIDTH SHALL BE 1/2" WIDE, MAXIMUM.
H. USE OF WIRED GLASS SHALL NOT BE PERMITTED.
I. CONTRACTOR SHALL COORDINATE THE SMOKE RESISTANCE AND/OR FIRE-RESISTANCE RATING OF DOORS AND WINDOWS INDICATED ON THIS SHEET WITH THE RATED ASSEMBLIES INDICATED ON THE LIFE SAFETY PLAN. IN THE CASE OF ANY DISCREPANCIES IN FIRE OR SMOKE RESISTANCE RATINGS, THE MOST RESTRICTIVE SHALL GOVERN.

FRAME MATERIAL LEGEND

HM HOLLOW METAL, COMMERCIAL
WD WOOD
AL ALUMINUM

DOOR LEGEND

HM 16 GA. COMMERCIAL
AL ALUMINUM
SCWD SOLID-CORE WOOD
HCWD HOLLOW CORE WOOD

GLASS TYPE LEGEND

IG INSULATED GLASS
TG TEMPERED (SAFETY) GLASS - CLEAR U.N.O.
ITG INSULATED TEMPERED GLASS
FG FIRE-RATED GLASS
SG SPANDREL GLASS

NOTES:

1. IN 1 HOUR DOORS IN FRAMES WITH SIDELITES, GLASS REQUIRES A 3/4 HOUR RATING.

DOOR HARDWARE SETS

A. PROVIDE ALL NECESSARY HARDWARE FOR DOOR OPERATION INCLUDING HINGES, STRIKES, LEVERS, LOCKSETS, WEATHER SEALS, THRESHOLDS, ASTRAGALS, AND MISC. ACCESSORIES. REFER TO SPECIFICATIONS FOR ADDITIONAL INFORMATION.
B. ALL HARDWARE TO BE LEVER STYLE IN COMPLIANCE WITH ADA STANDARDS. NO KNOW STYLE HARDWARE ALLOWED.
C. PROVIDE SECOND PEEP-HOLE AT 46" A.F.F. AT DOORS SERVING ADA UNITS. REFER TO SITE PLAN FOR UNIT NUMBERS AND LOCATIONS.
D. ALL HARDWARE SHALL HAVE A BRUSHED NICKEL FINISH OR SIMILAR.

STAMP

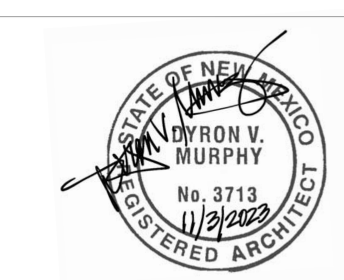

DYRON MURPHY ARCHITECTS, P.C.
4505 Montbel Place NE, Albuquerque, New Mexico 87107

SHIPROCK PINNACLE HOTEL & RESTAURANT

SHIPROCK, NEW MEXICO

100% CONSTRUCTION DOCUMENTS

ISSUED FOR CONSTRUCTION

NOVEMBER 3, 2023

PROJECT NUMBER	DRAWN BY	PROJ MGR
2022.10	Author	Designer

DOOR SCHEDULES

Sheet Title

Sheet Number of

A601

11/6/2023 8:04:32 AM C:\Revit Locals\Shiprock Pinnacle_Hotel_dfeldbusch_dm-architects_com.rvt
DYRON MURPHY ARCHITECTS, P.C.

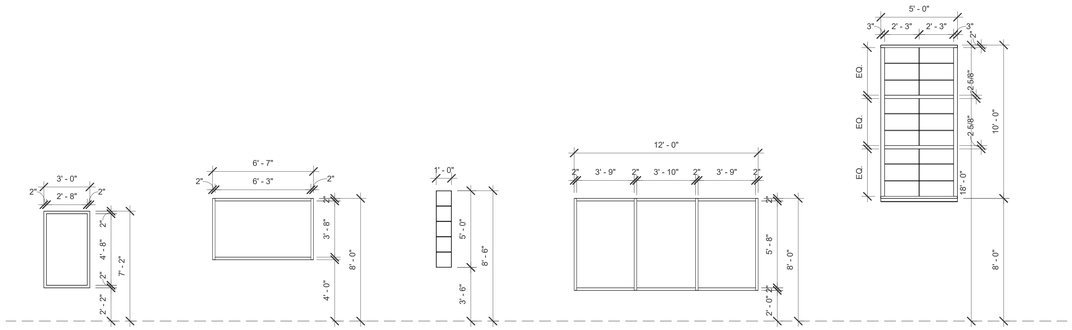

G — FRAME: ALUMINUM GLAZING: ITG

H — FRAME: ALUMINUM GLAZING: ITG

I — GLASS BLOCK

J — FRAME: ALUMINUM GLAZING: ITG

K

D4 WINDOW TYPES - CONTINUED
1/4" = 1'-0"

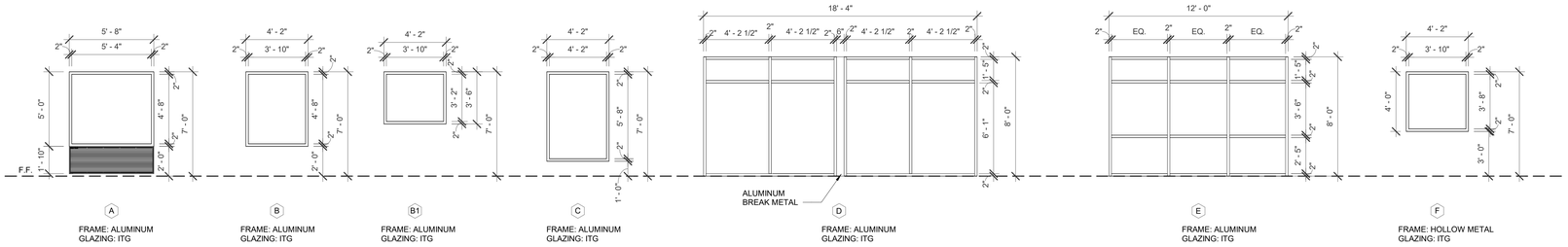

A — FRAME: ALUMINUM GLAZING: ITG

B — FRAME: ALUMINUM GLAZING: ITG

B1 — FRAME: ALUMINUM GLAZING: ITG

C — FRAME: ALUMINUM GLAZING: ITG

D — FRAME: ALUMINUM GLAZING: ITG

E — FRAME: ALUMINUM GLAZING: ITG

F — FRAME: HOLLOW METAL GLAZING: ITG

C5 WINDOW TYPES
1/4" = 1'-0"

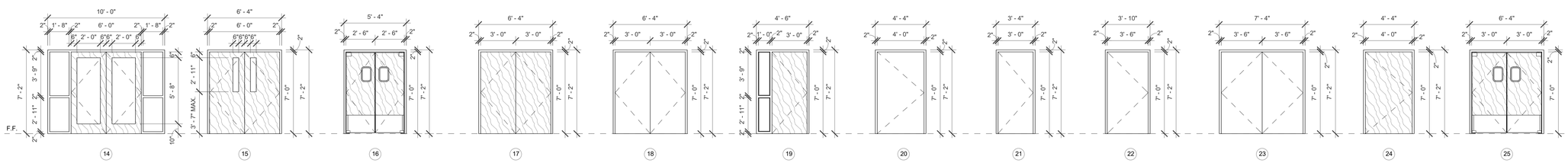

14 15 16 17 18 19 20 21 22 23 24 25

B6 DOOR TYPES
1/4" = 1'-0"

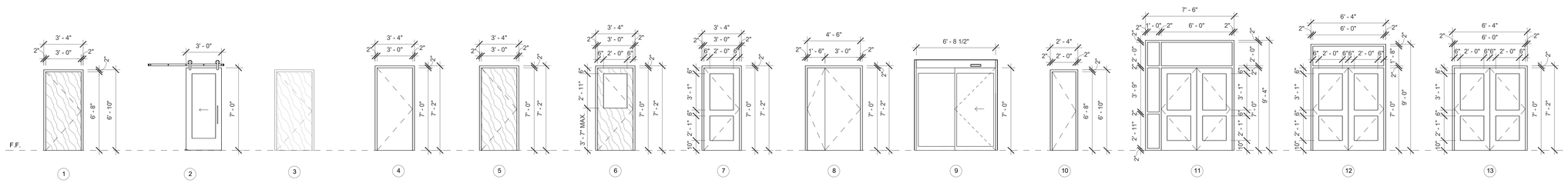

1 2 3 4 5 6 7 8 9 10 11 12 13

NOT USED

A6 DOOR TYPES
1/4" = 1'-0"

DOOR GENERAL NOTES

A. VERIFY ALL OPENING DIMENSIONS PRIOR TO FABRICATION.
B. SEE SPECIFICATIONS FOR HARDWARE SCHEDULE.
C. SEE SPECIFICATIONS FOR GLAZING SCHEDULE.
D. PROVIDE FIRE RATED GLAZING AT INTERIOR WINDOWS AS REQUIRED AT ALL LOCATIONS WHERE GLAZING IS WITHIN A FIRE RATED PARTITION. REFER TO LIFE SAFETY PLANS FOR ADDITIONAL INFORMATION.
E. TEMPER (SAFETY GLASS) ALL INNER LIGHTS FROM FINISH FLOOR TO 18" ABOVE AND WITHIN 12" OF A DOOR, TYPICAL.
F. PROVIDE BLINDS AT ALL INTERIOR AND EXTERIOR WINDOWS.
G. PROVIDE CLEAN APPLICATION OF SEALANT AROUND WINDOW AND DOOR FRAMES AT INTERIOR AND EXTERIOR SIDES. INTERIOR SEALANT BEAD WIDTH SHALL BE 1/4" WIDE, MAXIMUM. EXTERIOR SEALANT BEAD WIDTH SHALL BE 1/2" WIDE, MAXIMUM.
H. USE OF WIRED GLASS SHALL NOT BE PERMITTED.
I. CONTRACTOR SHALL COORDINATE THE SMOKE RESISTANCE AND/OR FIRE-RESISTANCE RATING OF DOORS AND WINDOWS INDICATED ON THIS SHEET WITH THE RATED ASSEMBLIES INDICATED ON THE LIFE SAFETY PLAN. IN THE CASE OF ANY DISCREPANCIES IN FIRE OR SMOKE RESISTANCE RATINGS, THE MOST RESTRICTIVE SHALL GOVERN.

FRAME MATERIAL LEGEND

HM HOLLOW METAL, COMMERCIAL
WD WOOD
AL ALUMINUM

DOOR LEGEND

HM 16 GA. COMMERCIAL
AL ALUMINUM
SCWD SOLID-CORE WOOD
HCWD HOLLOW CORE WOOD

GLASS TYPE LEGEND

IG INSULATED GLASS
TG TEMPERED (SAFETY) GLASS - CLEAR U.N.O.
ITG INSULATED TEMPERED GLASS
FG FIRE-RATED GLASS
SG SPANDREL GLASS

NOTES:

1. IN 1 HOUR DOORS IN FRAMES WITH SIDELITES, GLASS REQUIRES A 3/4 HOUR RATING.

DOOR HARDWARE SETS

A. PROVIDE ALL NECESSARY HARDWARE FOR DOOR OPERATION INCLUDING HINGES, STRIKES, LEVERS, LOCKSETS, WEATHER SEALS, THRESHOLDS, ASTRAGALS, AND MISC. ACCESSORIES. REFER TO SPECIFICATIONS FOR ADDITIONAL INFORMATION.
B. ALL HARDWARE TO BE LEVER STYLE IN COMPLIANCE WITH ADA STANDARDS. NO KNOW STYLE HARDWARE ALLOWED.
C. PROVIDE SECOND PEEP-HOLE AT 46" A.F.F. AT DOORS SERVING ADA UNITS. REFER TO SITE PLAN FOR UNIT NUMBERS AND LOCATIONS.
D. ALL HARDWARE SHALL HAVE A BRUSHED NICKEL FINISH OR SIMILAR.

WINDOW NOTES

A. ALUMINUM WINDOW PERIMETER SEALANT AND BACKER ROD MUST BE CONTINUOUS AROUND HEAD, JAMB AND SUBSILL FLASHING TO ALUMINUM FLASHING ON WEATHER RESISTIVE MEMBRANE TYPICAL ALL LOCATIONS.

STAMP

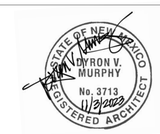

DYRON MURPHY ARCHITECTS, P.C.

4505 Montbel Place NE, Albuquerque, New Mexico 87107

SHIPROCK PINNACLE HOTEL & RESTAURANT

SHIPROCK, NEW MEXICO

100% CONSTRUCTION DOCUMENTS

ISSUED FOR CONSTRUCTION

NOVEMBER 3, 2023

PROJECT NUMBER	DRAWN BY	PROJ MGR
2022.10	Author	Designer

DOOR AND WINDOW TYPES

Sheet Title

Sheet Number of

A602

11/6/2023 8:54:37 AM C:\Revit Local\Shiprock Pinnacle_Hotel_dmaibusch_dmarchitects_corp.rvt
DYRON MURPHY ARCHITECTS, P.C.

C6 **2ND FLOOR FINISH PLAN**
1/8" = 1'-0"

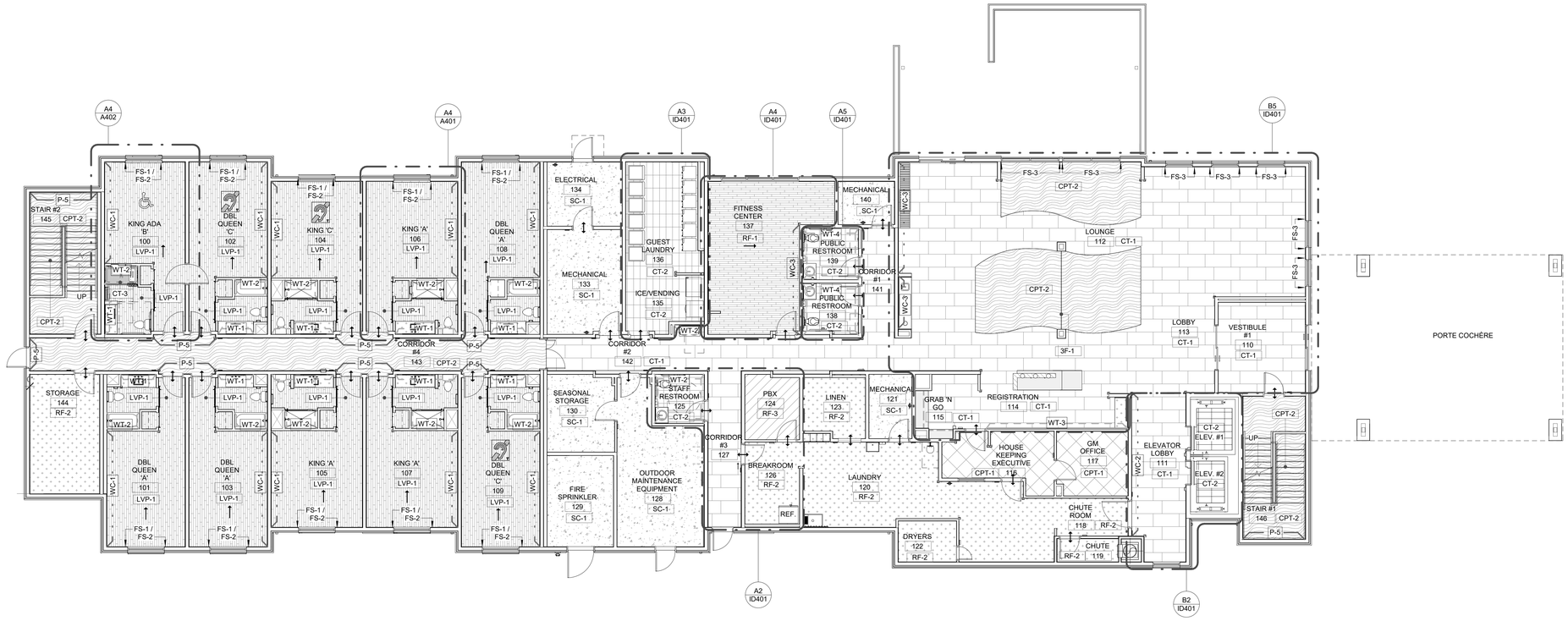

A6 **1ST FLOOR FINISH PLAN**
1/8" = 1'-0"

FINISH NOTES

A. FIELD VERIFY ALL EXISTING CONDITIONS ON SITE PRIOR TO FABRICATION OR CONSTRUCTION.
B. CONTRACTOR TO NOTIFY THE ARCHITECT OF ANY DISCREPANCIES OR CONFLICTS IN THESE DOCUMENTS.
C. PROVIDE ALL FINISH MATERIALS AS INDICATED ON THE DRAWINGS AND AS SCHEDULED IN MATERIAL SCHEDULE ON SHEET ID601.
D. PROVIDE COLORED FLOOR PATTERNS FOR APPROVAL PRIOR TO INSTALLATION.
E. PROVIDE A DEMONSTRATION WALL OF EACH PAINT SPECIFIED FOR APPROVAL PRIOR TO INSTALLATION. COORDINATE DEMONSTRATION WALL WITH ARCHITECT.
F. ALL WALLS TO BE PAINTED **"P-1"** U.N.O.
G. ALL CEILINGS TO BE PAINTED **"P 2"** U.N.O.
H. ALL OPEN TO STRUCTURE TO BE PAINTED **"P 3"** U.N.O.
I. ALL HOLLOW METAL DOOR FRAMES TO BE PAINTED **"P 4"** U.N.O.
J. REFER TO FINISH PLANS FOR LOCATIONS OF ACCENT PAINT COLORS AND OTHER WALL FINISHES.
K. REFER TO FLOOR FINISH PLANS FOR LOCATIONS OF ALL FLOOR TYPES AND PATTERNS.
L. REFER TO REFLECTED CEILING PLANS FOR ALL CEILING, SOFFIT AND OPEN TO STRUCTURE COLOR LOCATIONS.
M. REFER TO INTERIOR ELEVATIONS FOR LOCATIONS AND PATTERNS OF FINISHES.
N. ALL CHANGES IN FLOOR MATERIAL TO OCCUR AT CENTER LINE OF DOOR FRAMES U.N.O.
O. PROVIDE TRANSITION STRIP AND REDUCER WHERE CHANGES IN FLOORING MATERIAL OCCURS. COLOR TO BE TBD, REFER TO SHEET ID601 FOR DETAILS.
P. ALL AREAS TO RECEIVE TILE FLOORING SHALL HAVE 4" MIN. COVE BASE CONTINUOUS AT BASE OF WALL WHERE THERE IS NO WALL TILE.
Q. GROUT SHALL BE SEALED IN ALL FLOOR AND WALL TILE APPLICATIONS PER MANUFACTURER'S RECOMMENDATIONS.
R. PROVIDE SCHLUTER ALUMINUM TILE TRIM AT ALL HORIZONTAL AND VERTICAL EXPOSED TILE EDGES AND CORNERS.

FLOOR FINISH LEGEND

*NOTE: PATTERNS IN THIS LEGEND TO NOT NECESSARILY REFLECT TILE OR PLANK SIZES OR PATTERNS. REFER TO THE LARGE SCALE PLANS AND MATERIAL SCHEDULE FOR INSTALL PATTERNS AND SIZES.

- SEALED CONCRETE: SC-1 BASE: B2
- CERAMIC TILE: CT-1 BASE: B1 GROUT: GT-1
- CERAMIC TILE: CT-2 BASE: B1 GROUT: GT-1
- CARPET TILE 1: CPT- 1 BASE: B2
- CARPET TILE 3: CPT-2 BASE: B2
- RESILIENT FLOORING: RF-1 PATTERN: BASE: B2
- RESILIENT FLOORING: RF-2 PATTERN: BASE: B3
- RESILIENT FLOORING: RF-3 PATTERN: BASE: B3
- LUXURY VINYL TILE: LVP-1 BASE: B2
- TRANSITION STRIP/ THRESHOLD
- DIRECTION OF LONG EDGE OF PLANK

WALL FINISH LEGEND

*COORDINATE WITH MATERIAL FINISH SCHEDULE AND INTERIOR AND EXTERIOR ELEVATIONS FOR ADDITIONAL INFORMATION

- LOCATION OF WALL COVERING, SEE PLAN FOR TYPE
- LOCATION OF WALL TILE OR STONE, SEE PLAN FOR TYPE
- LOCATION OF ACCENT PAINT COLOR, SEE FINISH SCHEDULE FOR COLOR
- XX — MATERIAL TAG

WINDOW TREATMENT LEGEND

*SEE PLAN FOR LOCATIONS

- FS-1 — ROLLER FABRIC SHADE WHITE: 0801 BLACKOUT
- FS-2 — ROLLER FABRIC SHADE SILVER BIRCH: 1519 OPACITY: 3%
- FS-3 — MANUAL ROLLER FABRIC SHADE TAUPE: 1524 OPACITY: 3%

ROOMS ONLY: FASCIA FABRIC: THERMOVEIL (SILVER BIRCH) 1500-1519

TYPICAL FASCIA: CLEAR ANODIZED

INSTALL: OUTSIDE WALL MOUNTED ABOVE WINDOW

STAMP

STATE OF NEW MEXICO — DYRON V. MURPHY — No. 3713 — REGISTERED ARCHITECT — 11/3/2023

DYRON MURPHY ARCHITECTS, P.C.
4505 Montbel Place NE, Albuquerque, New Mexico 87107

SHIPROCK PINNACLE HOTEL & RESTAURANT

SHIPROCK, NEW MEXICO

100% CONSTRUCTION DOCUMENTS

ISSUED FOR CONSTRUCTION

NOVEMBER 3, 2023

PROJECT NUMBER	DRAWN BY	PROJ MGR
2022.10	ACR	RI

1ST & 2ND FINISH FLOOR PLANS - HOTEL

Sheet Title

Sheet Number ID101 of

11/6/2023 9:29:41 AM C:\Revit Local\Shiprock Pinnacle_hotel_dbelbuch_dma-architects_com.rvt
DYRON MURPHY ARCHITECTS, P.C.

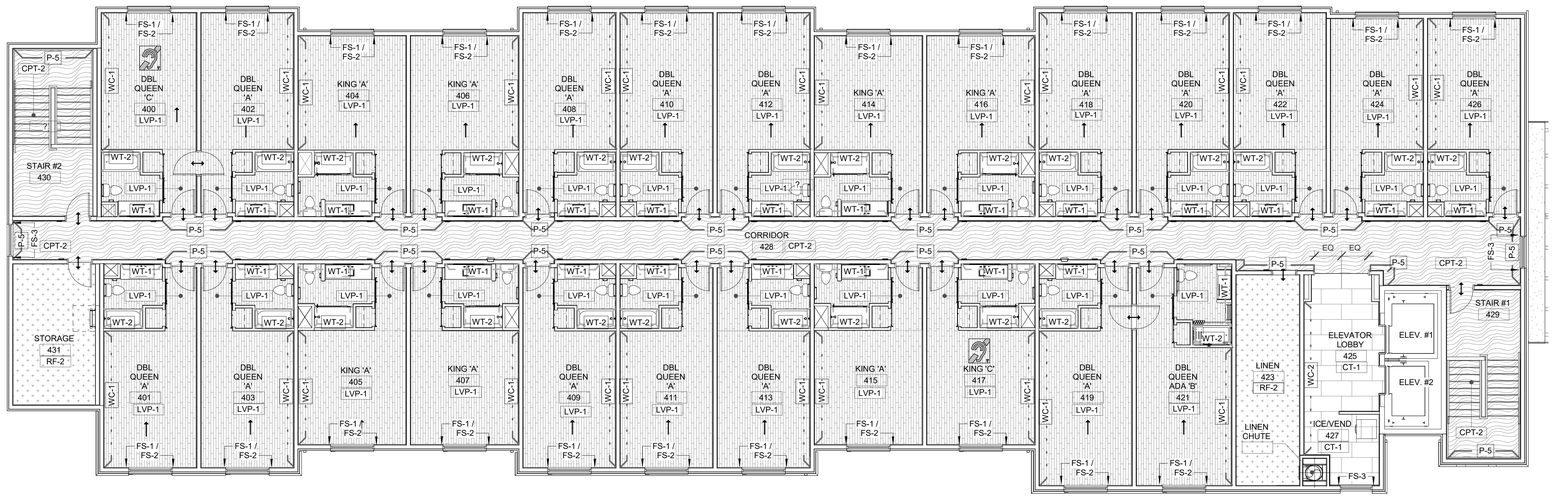

C6 4TH FLOOR FINISH PLAN

1/8" = 1'-0"

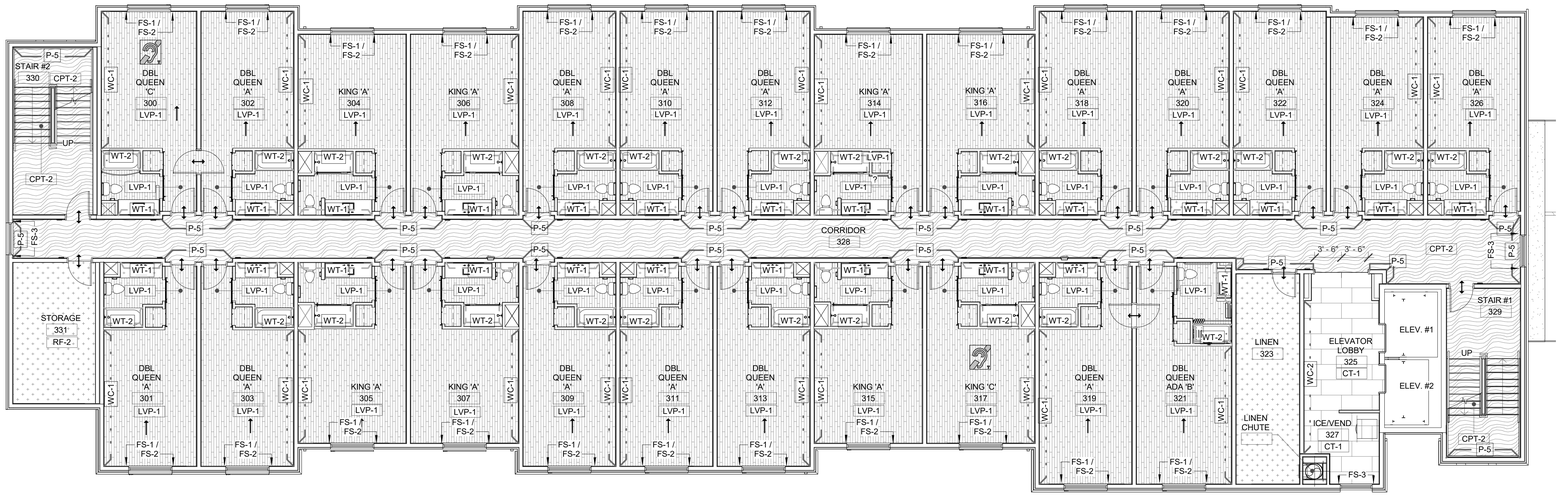

A6 3RD FLOOR FLOOR PLAN

1/8" = 1'-0"

FINISH NOTES

A. FIELD VERIFY ALL EXISTING CONDITIONS ON SITE PRIOR TO FABRICATION OR CONSTRUCTION.
B. CONTRACTOR TO NOTIFY THE ARCHITECT OF ANY DISCREPANCIES OR CONFLICTS IN THESE DOCUMENTS.
C. PROVIDE ALL FINISH MATERIALS AS INDICATED ON THE DRAWINGS AND AS SCHEDULED IN MATERIAL SCHEDULE ON SHEET ID601.
D. PROVIDE COLORED FLOOR PATTERNS FOR APPROVAL PRIOR TO INSTALLATION.
E. PROVIDE A DEMONSTRATION WALL OF EACH PAINT SPECIFIED FOR APPROVAL PRIOR TO INSTALLATION. COORDINATE DEMONSTRATION WALL WITH ARCHITECT.
F. ALL WALLS TO BE PAINTED **"P-1"** U.N.O.
G. ALL CEILINGS TO BE PAINTED **"P 2"** U.N.O.
H. ALL OPEN TO STRUCTURE TO BE PAINTED **"P 3"** U.N.O.
I. ALL HOLLOW METAL DOOR FRAMES TO BE PAINTED **"P 4"** U.N.O.
J. REFER TO FINISH PLANS FOR LOCATIONS OF ACCENT PAINT COLORS AND OTHER WALL FINISHES.
K. REFER TO FLOOR FINISH PLANS FOR LOCATIONS OF ALL FLOOR TYPES AND PATTERNS.
L. REFER TO REFLECTED CEILING PLANS FOR ALL CEILING, SOFFIT AND OPEN TO STRUCTURE COLOR LOCATIONS.
M. REFER TO INTERIOR ELEVATIONS FOR LOCATIONS AND PATTERNS OF FINISHES.
N. ALL CHANGES IN FLOOR MATERIAL TO OCCUR AT CENTER LINE OF DOOR FRAMES U.N.O.
O. PROVIDE TRANSITION STRIP AND REDUCER WHERE CHANGES IN FLOORING MATERIAL OCCURS. COLOR TO BE TBD, REFER TO SHEET ID601 FOR DETAILS.
P. ALL AREAS TO RECEIVE TILE FLOORING SHALL HAVE 4" MIN. COVE BASE CONTINUOUS AT BASE OF WALL WHERE THERE IS NO WALL TILE.
Q. GROUT SHALL BE SEALED IN ALL FLOOR AND WALL TILE APPLICATIONS PER MANUFACTURER'S RECOMMENDATIONS.
R. PROVIDE SCHLUTER ALUMINUM TILE TRIM AT ALL HORIZONTAL AND VERTICAL EXPOSED TILE EDGES AND CORNERS.

FLOOR FINISH LEGEND

*NOTE: PATTERNS IN THIS LEGEND TO NOT NECESSARILY REFLECT TILE OR PLANK SIZES OR PATTERNS. REFER TO THE LARGE SCALE PLANS AND MATERIAL SCHEDULE FOR INSTALL PATTERNS AND SIZES.

- SEALED CONCRETE: SC-1 BASE: B2
- CERAMIC TILE: CT-1 BASE: B1 GROUT: GT-1
- CERAMIC TILE: CT-2 BASE: B1 GROUT: GT-1
- CARPET TILE 1: CPT- 1 BASE: B2
- CARPET TILE 3: CPT-2 BASE: B2
- RESILIENT FLOORING: RF-1 PATTERN: BASE: B2
- RESILIENT FLOORING: RF-2 PATTERN: BASE: B3
- RESILIENT FLOORING: RF-3 PATTERN: BASE: B3
- LUXURY VINYL TILE: LVP-1 BASE: B2
- TRANSITION STRIP/ THRESHOLD
- DIRECTION OF LONG EDGE OF PLANK

WALL FINISH LEGEND

*COORDINATE WITH MATERIAL FINISH SCHEDULE AND INTERIOR AND EXTERIOR ELEVATIONS FOR ADDITIONAL INFORMATION

- LOCATION OF WALL COVERING, SEE PLAN FOR TYPE
- LOCATION OF WALL TILE OR STONE, SEE PLAN FOR TYPE
- LOCATION OF ACCENT PAINT COLOR, SEE FINISH SCHEDULE FOR COLOR
- XX — MATERIAL TAG

WINDOW TREATMENT LEGEND

*SEE PLAN FOR LOCATIONS

- FS-1 — ROLLER FABRIC SHADE WHITE: 0801 BLACKOUT
- FS-2 — ROLLER FABRIC SHADE SILVER BIRCH: 1519 OPACITY: 3%
- FS-3 — MANUAL ROLLER FABRIC SHADE TAUPE: 1524 OPACITY: 3%

ROOMS ONLY: FASCIA FABRIC: THERMOVEIL (SILVER BIRCH) 1500-1519

TYPICAL FASCIA: CLEAR ANODIZED

INSTALL: OUTSIDE WALL MOUNTED ABOVE WINDOW

STAMP

STATE OF NEW MEXICO
DYRON V. MURPHY
No. 3713
11/3/2023
REGISTERED ARCHITECT

DYRON MURPHY ARCHITECTS, P.C.

4505 Montbel Place NE, Albuquerque, New Mexico 87107

SHIPROCK PINNACLE HOTEL & RESTAURANT

SHIPROCK, NEW MEXICO

100% CONSTRUCTION DOCUMENTS

ISSUED FOR CONSTRUCTION

NOVEMBER 3, 2023

PROJECT NUMBER	DRAWN BY	PROJ MGR
2022.10	ACR	RI

3RD & 4TH FINISH FLOOR PLANS - HOTEL

Sheet Title

Sheet Number of

ID102

11/6/2023 9:20:02 AM C:\Revit Local\Shiprock Pinnacle_Hotel_ghedbrun_pw-architects_com.rvt
DYRON MURPHY ARCHITECTS, P.C.

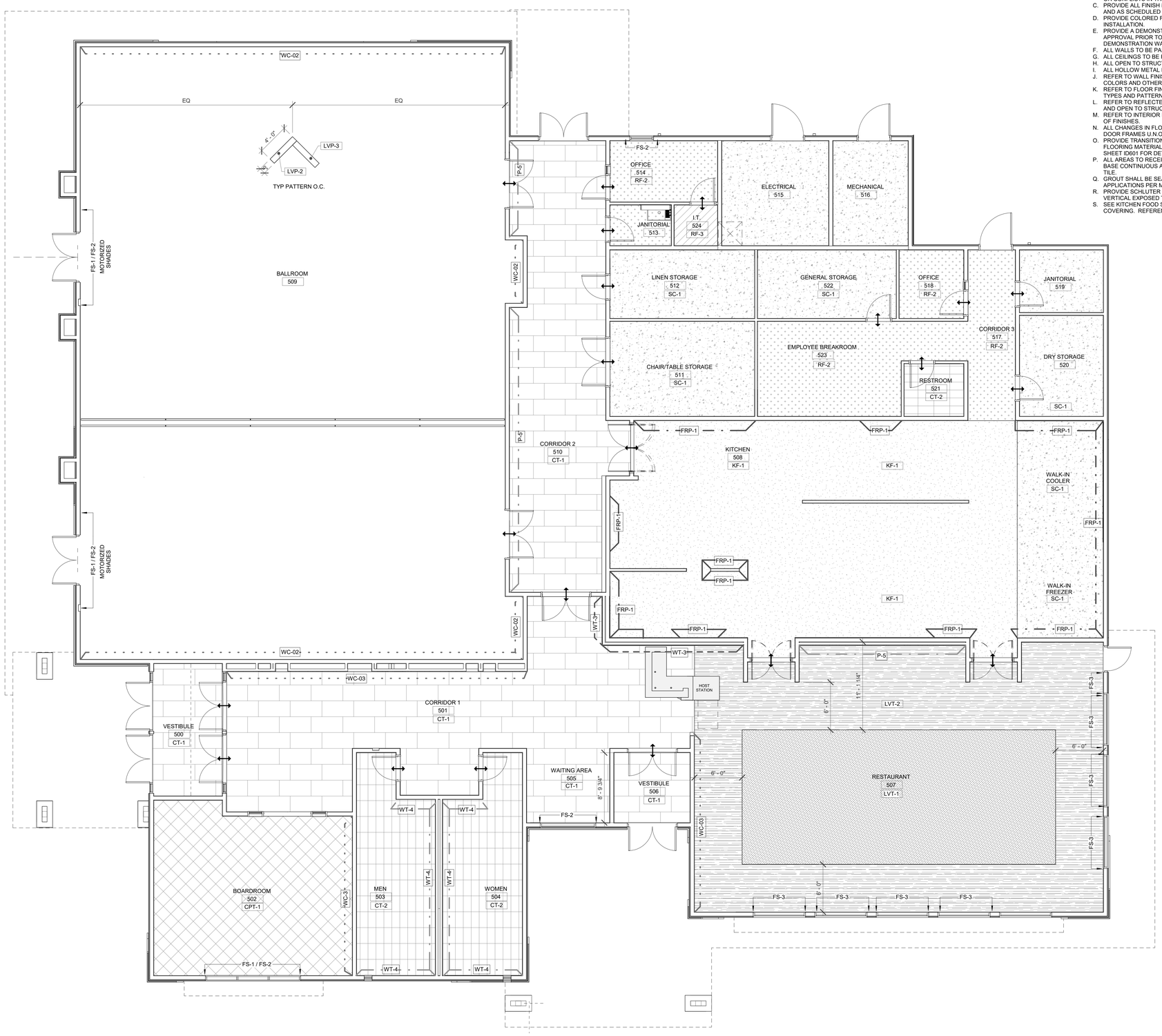

FINISH NOTES

A. FIELD VERIFY ALL EXISTING CONDITIONS ON SITE PRIOR TO FABRICATION OR CONSTRUCTION.
B. CONTRACTOR TO NOTIFY THE ARCHITECT OF ANY DISCREPANCIES OR CONFLICTS IN THESE DOCUMENTS.
C. PROVIDE ALL FINISH MATERIALS AS INDICATED ON THE DRAWINGS AND AS SCHEDULED IN MATERIAL SCHEDULE.
D. PROVIDE COLORED FLOOR PATTERNS FOR APPROVAL PRIOR TO INSTALLATION.
E. PROVIDE A DEMONSTRATION WALL OF EACH PAINT SPECIFIED FOR APPROVAL PRIOR TO INSTALLATION. COORDINATE DEMONSTRATION WALL WITH ARCHITECT.
F. ALL WALLS TO BE PAINTED **"P-1"** U.N.O.
G. ALL CEILINGS TO BE PAINTED **"P-2"** U.N.O.
H. ALL OPEN TO STRUCTURE TO BE PAINTED **"P-3"** U.N.O.
I. ALL HOLLOW METAL DOOR FRAMES TO BE PAINTED **"P-4"** U.N.O.
J. REFER TO WALL FINISH PLANS FOR LOCATIONS OF ACCENT PAINT COLORS AND OTHER WALL FINISHES.
K. REFER TO FLOOR FINISH PLANS FOR LOCATIONS OF ALL FLOOR TYPES AND PATTERNS.
L. REFER TO REFLECTED CEILING PLANS FOR ALL CEILING, SOFFIT AND OPEN TO STRUCTURE COLOR LOCATIONS.
M. REFER TO INTERIOR ELEVATIONS FOR LOCATIONS AND PATTERNS OF FINISHES.
N. ALL CHANGES IN FLOOR MATERIAL TO OCCUR AT CENTER LINE OF DOOR FRAMES U.N.O.
O. PROVIDE TRANSITION STRIP AND REDUCER WHERE CHANGES IN FLOORING MATERIAL OCCURS. COLOR TO BE TBD, REFER TO SHEET ID601 FOR DETAILS.
P. ALL AREAS TO RECEIVE TILE FLOORING SHALL HAVE 3" MIN. COVE BASE CONTINUOUS AT BASE OF WALL WHERE THERE IS NO WALL TILE.
Q. GROUT SHALL BE SEALED IN ALL FLOOR AND WALL TILE APPLICATIONS PER MANUFACTURER'S RECOMMENDATIONS.
R. PROVIDE SCHLUTER ALUMINUM TILE TRIM AT ALL HORIZONTAL AND VERTICAL EXPOSED TILE EDGES AND CORNERS.
S. SEE KITCHEN FOOD SERVICE FOR STAINLESS STEEL WALL COVERING. REFERENCE FRP-1 PER FOOD SERVICE LAYOUT.

FLOOR FINISH LEGEND

*NOTE: PATTERNS IN THIS LEGEND TO NOT NECESSARILY REFLECT TILE OR PLANK SIZES OR PATTERNS. REFER TO THE LARGE SCALE PLANS AND MATERIAL SCHEDULE FOR INSTALL PATTERNS AND SIZES.

SEALED CONCRETE: SC-1
BASE: B1

ENTRANCE MATT: EM-1
BASE: N/A

CERAMIC TILE: CT-1
BASE: B1
GROUT:

CERAMIC TILE: CT-1
BASE: B1
GROUT:

CARPET TILE 1: CPT- 1
BASE: B1

RESILIENT FLOORING: RF-2
PATTERN:
BASE: B2

RESILIENT FLOORING: RF-3
PATTERN:
BASE: B2

KITCHEN FLOORING: KF-1
PATTERN:
BASE: B2

LUXURY VINYL TILE: LVP-2
BASE: B1

LUXURY VINYL TILE: LVP-3
BASE: B1

LUXURY VINYL TILE: LVT-1
BASE: B2

LUXURY VINYL TILE: LVT-2
BASE: B2

TRANSITION STRIP/
THRESHOLD

DIRECTION OF LONG EDGE OF PLANK

WALL FINISH LEGEND

*COORDINATE WITH MATERIAL FINISH SCHEDULE AND INTERIOR AND EXTERIOR ELEVATIONS FOR ADDITIONAL INFORMATION

LOCATION OF WALL COVERING, SEE PLAN FOR TYPE

LOCATION OF WALL TILE OR STONE, SEE PLAN FOR TYPE

LOCATION OF ACCENT PAINT COLOR, SEE PLAN FOR COLOR

LOCATION OF FRP-1: FIBER REINFORCED PANELS

XX — MATERIAL TAG

WINDOW TREATMENT LEGEND

*SEE PLAN FOR LOCATIONS

FS-1 — ROLLER FABRIC SHADE
WHITE: 0801
BLACKOUT

FS-2 — ROLLER FABRIC SHADE
SILVER BIRCH: 1519
OPACITY: 3%

FS-3 — MANUAL ROLLER FABRIC SHADE
TAUPE: 1524
OPACITY: 3%

TYPICAL FASCIA: CLEAR ANODIZED

INSTALL: OUTSIDE WALL MOUNTED ABOVE WINDOW

STAMP

STATE OF NEW MEXICO
DYRON V. MURPHY
No. 3713
11/3/2023
REGISTERED ARCHITECT

DYRON MURPHY ARCHITECTS, P.C.

4505 Montbel Place NE, Albuquerque, New Mexico 87107

SHIPROCK PINNACLE HOTEL & RESTAURANT

SHIPROCK, NEW MEXICO

100% CONSTRUCTION DOCUMENTS

ISSUED FOR CONSTRUCTION

NOVEMBER 3, 2023

PROJECT NUMBER	DRAWN BY	PROJ MGR
2022.10	Author	Designer

FINISH FLOOR PLAN - RESTAURANT

Sheet Title

Sheet Number of

ID103

A6 **FINISH FLOOR PLAN - RESTAURANT**
3/16" = 1'-0"

0 4' 8' 16'

N

11/6/2023 9:43:59 AM C:\Revit Local\Shiprock Pinnacle_Restaurant_dkstbuck_dm-architects_rzvm.rvt
DYRON MURPHY ARCHITECTS, P.C.

RESTAURANT - SIGNAGE SCHEDULE			
ROOM NUMBER	ROOM NAME	SIGNAGE TYPE	SIGN MESSAGE
200	KING ADA "B"	S1	

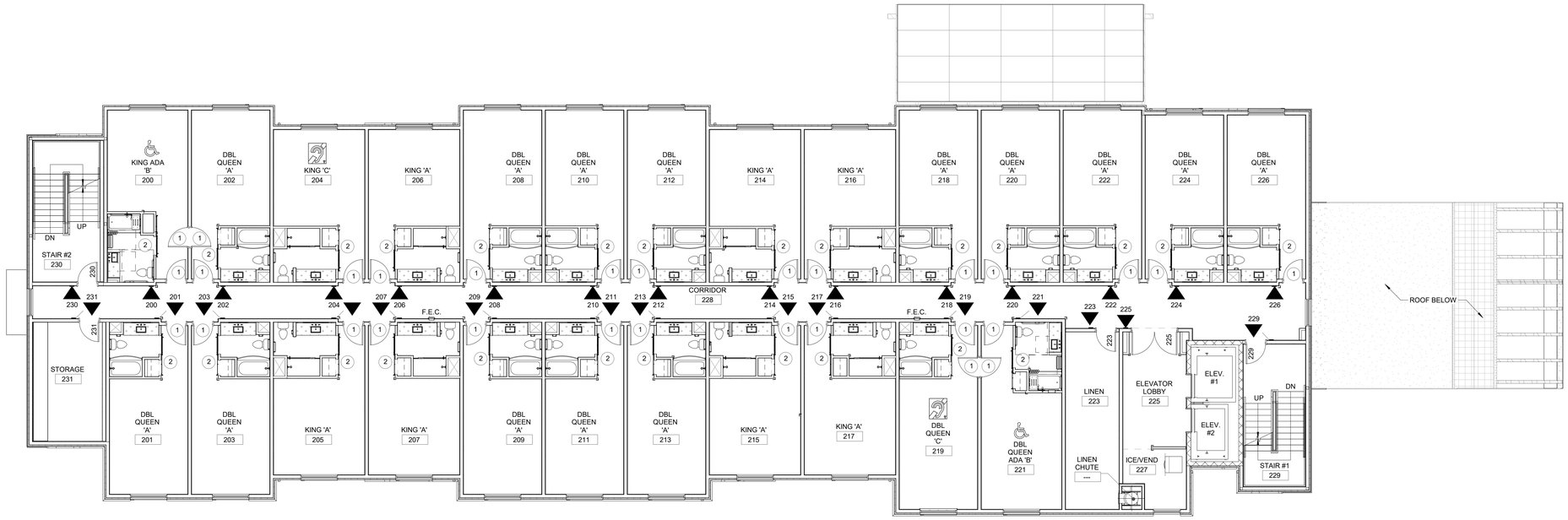

C6 **2ND FLOOR SIGNAGE PLAN**
1/8" = 1'-0"

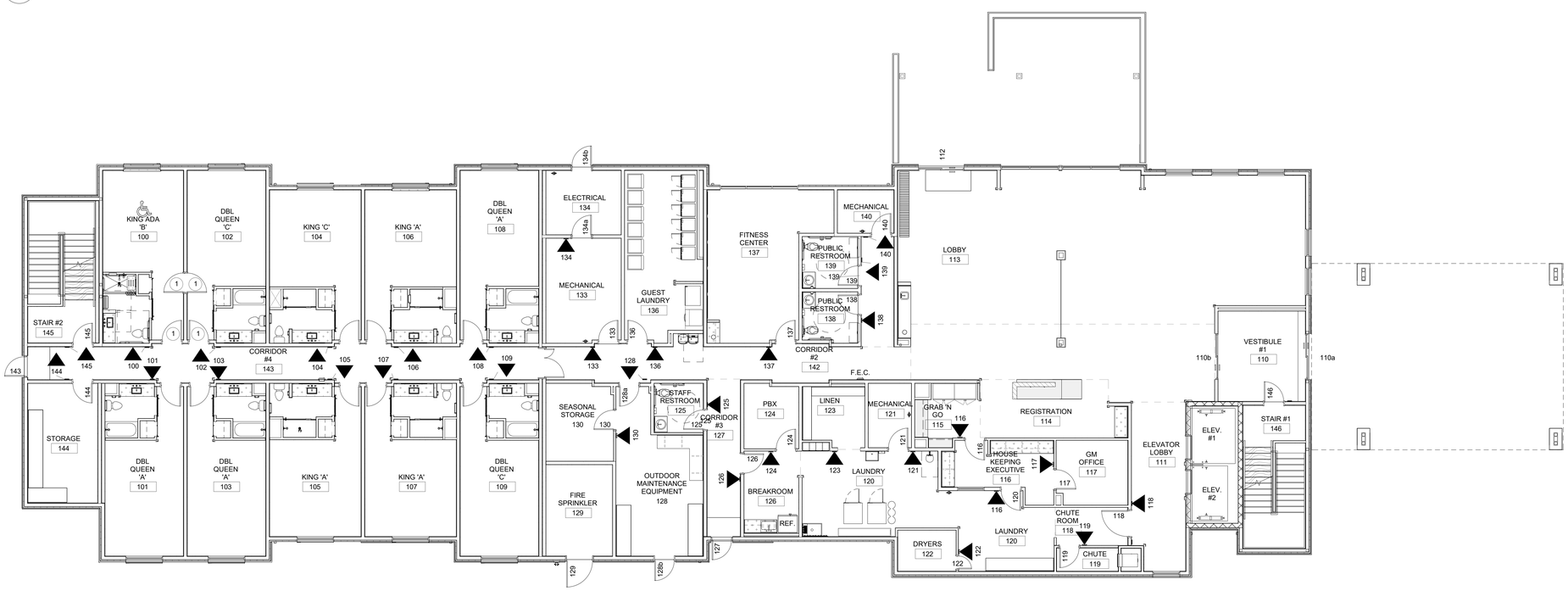

A6 **1st FLOOR SIGNAGE PLAN**
1/8" = 1'-0"

STAMP

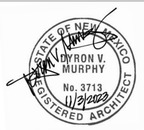

DYRON MURPHY ARCHITECTS, P.C.

4505 Montbel Place NE, Albuquerque, New Mexico 87107

SHIPROCK PINNACLE HOTEL & RESTAURANT

SHIPROCK, NEW MEXICO

100% CONSTRUCTION DOCUMENTS

ISSUED FOR CONSTRUCTION

NOVEMBER 3, 2023

PROJECT NUMBER	DRAWN BY	PROJ MGR
2022.10	ACR	RI

SIGNAGE PLAN - HOTEL

Sheet Title

Sheet Number of

ID104

DYRON MURPHY ARCHITECTS, P.C.

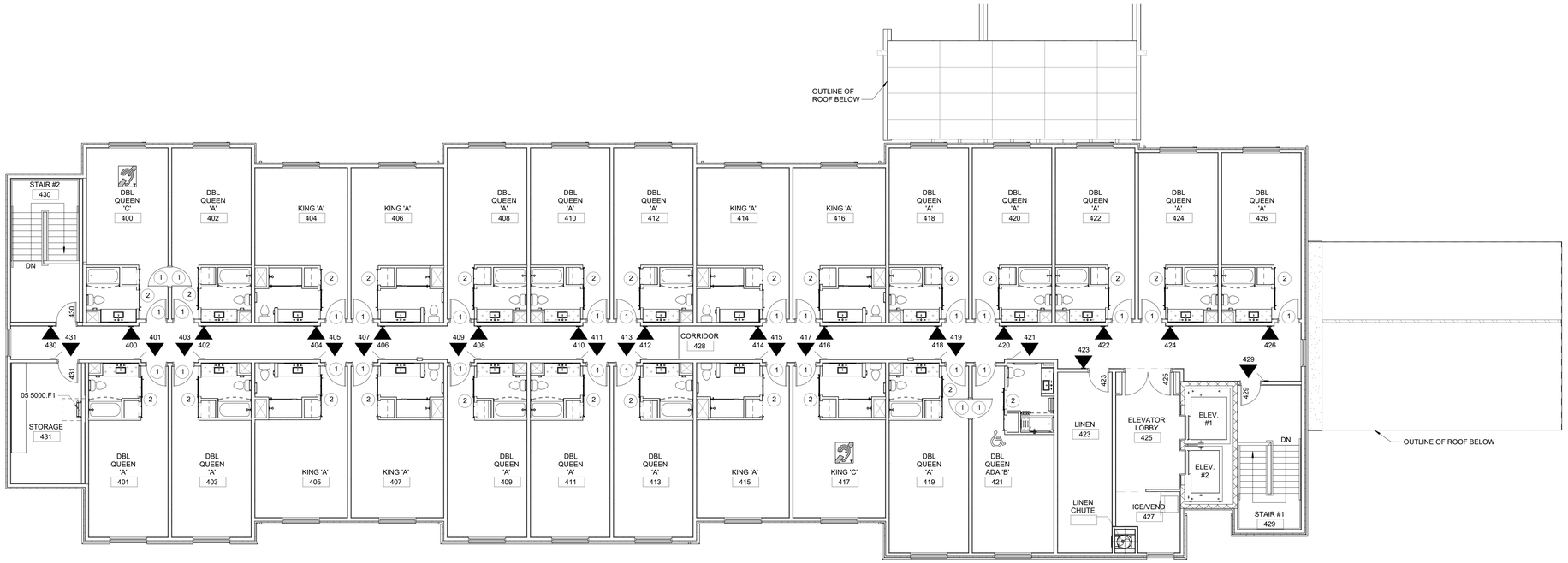

C6 **4TH FLOOR SIGNAGE PLAN**
1/8" = 1'-0"

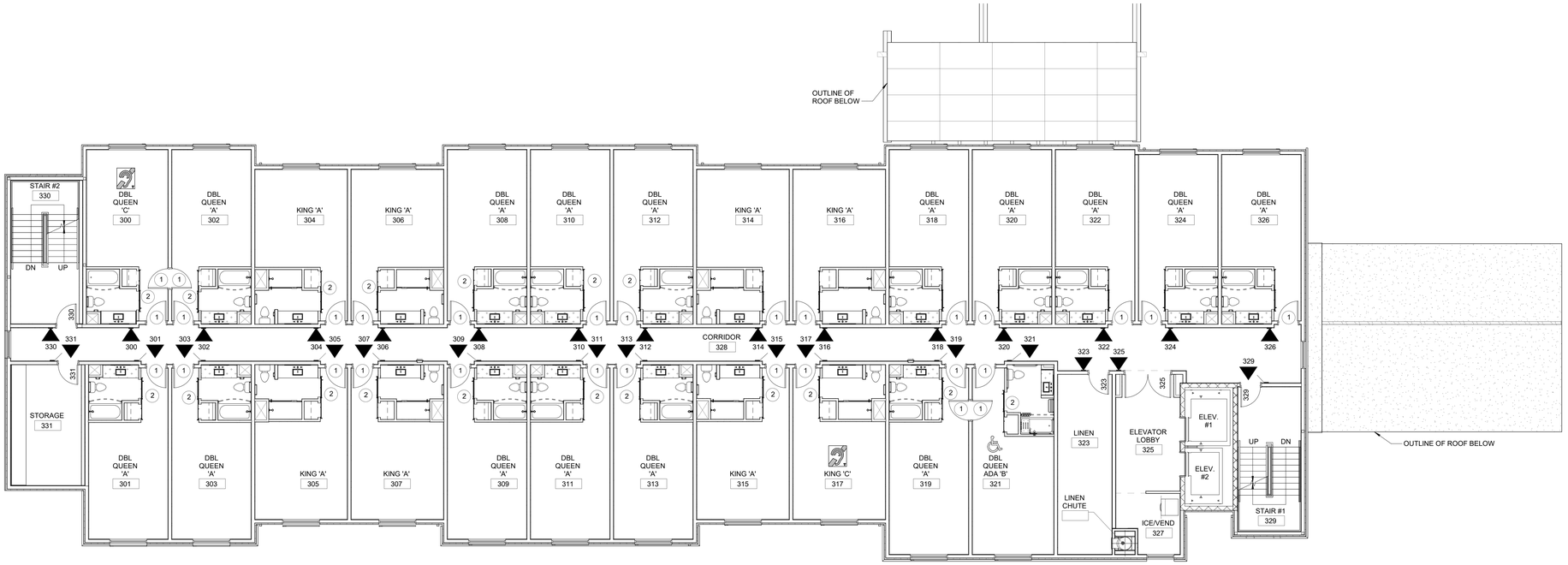

A6 **3RD FLOOR SIGNAGE PLAN**
1/8" = 1'-0"

STAMP

STATE OF NEW MEXICO
DYRON V. MURPHY
No. 3713
11/3/2023
REGISTERED ARCHITECT

DYRON MURPHY ARCHITECTS, P.C.

4505 Montbel Place NE, Albuquerque, New Mexico 87107

SHIPROCK PINNACLE HOTEL & RESTAURANT

SHIPROCK, NEW MEXICO

100% CONSTRUCTION DOCUMENTS

ISSUED FOR CONSTRUCTION

NOVEMBER 3, 2023

PROJECT NUMBER	DRAWN BY	PROJ MGR
2022.10	ACR	RI

SIGNAGE PLAN - HOTEL

Sheet Title

Sheet Number of

ID105

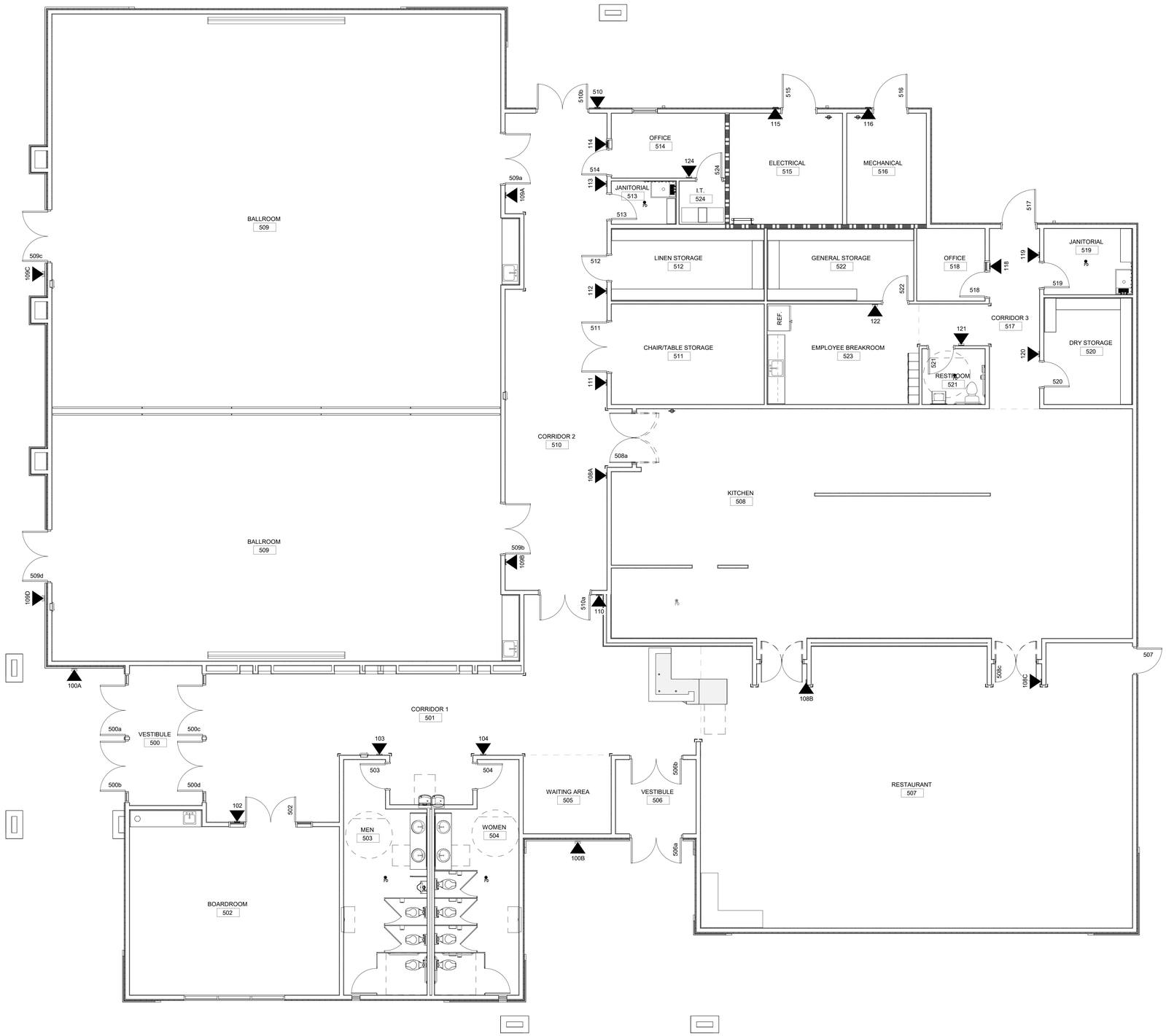

A6 **SIGNAGE PLAN - RESTAURANT**
3/16" = 1'-0"

GENERAL NOTES

A. BASIS OF DESIGN IS _____, _____SIGN SYSTEM.
B. REFER TO SPECIFICATIONS AND DRAWINGS FOR ADDITIONAL INFORMATION.
C. PROVIDE A TOTAL OF _____ EVACUATION SIGNS. GRAPHIC INFORMATION INSERT TO BE PROVIDED BY ARCHITECT.
D. REFER TO SITE PLAN AND DETAILS FOR MONUMENT SIGN.
E. REFER TO INTERIOR AND EXTERIOR ELEVATIONS FOR ARCHITECTURAL LETTERS AND PLAQUE INFORMATION.
F. ALL FINAL WORDING, IMAGES, AND PATTERNS TO BE DETERMINED BY OWNER AND ARCHITECT.

SIGNAGE LEGEND

*ALL SIGNAGE TO BE ADA TACTILE TEXT AND BRAILLE, UNO

TYPE 1	ALLOY SYSTEM 6"X8" NON-GLARE LENS TRANSPARENCY INSERT RUBBER FASTENERS
TYPE 2	ALLOY SYSTEM 6"X8"
TYPE 3	ALLOY SYSTEM 6"X8" W/ OCCUPANCY SLIDER
TYPE 4	ALUMINUM REVERSE CHANNEL ARCHITECTURAL LETTERS *REFER TO DRAWINGS AND INTERIOR ELEVATIONS FOR SIZE, MATERIAL, AND LOCATIONS
TYPE 5	SHEET METAL ALUMINUM, LASER CUT WITH FASTENERS
TYPE 6	ACRYLIC 6"X8" COLOR TBD *EXTERIOR
TYPE 7	VINYL WALL GRAPHIC REFER TO ELEVATIONS FOR DESIGNS
TYPE 8	VINYL FILM ETCHED GLASS LOOK *REFER TO DOOR AND WINDOW TYPES FOR LOCATIONS AND PATTERN.
TYPE 9	ACRYLIC LOGO 24" DIA, WITH STANDOFF ALUMINUM MOUNTS
EXIT	ALLOY SYSTEM 3"X6"
EVAC	ALLOY SYSTEM 10.5"X11" EVACUATION PLAN NON-GLARE LENS *TO HOLD 8.5"X11" EVACUATION INSERT
MO	ALLOY SYSTEM 4"X8" MAXIMUM OCCUPANCY
W	ALLOY SYSTEM 8"X8" WOMEN RESTROOM
M	ALLOY SYSTEM 8"X8" MEN RESTROOM
FR	ALLOY SYSTEM 8"X8" FAMILY RESTROOM
FLAG	ALLOY SYSTEM 8"X8" ALUMINUM BRACKET
TYPE 1	SIGNAGE TAG

STAMP

STATE OF NEW MEXICO
DYRON V. MURPHY
No. 3713
11/3/2023
REGISTERED ARCHITECT

DYRON MURPHY ARCHITECTS, P.C.

4505 Montbel Place NE, Albuquerque, New Mexico 87107

SHIPROCK PINNACLE HOTEL & RESTAURANT

SHIPROCK, NEW MEXICO

100% CONSTRUCTION DOCUMENTS

ISSUED FOR CONSTRUCTION

NOVEMBER 3, 2023

PROJECT NUMBER	DRAWN BY	PROJ MGR
2022.10	Author	Designer

SIGNAGE PLAN - RESTAURANT

Sheet Title

Sheet Number of

ID106

C:\Revit Local\Shiprock Pinnacle_Restaurant_dlebtbuch_dm-architects_com.rvt
11/6/2023 9:43:13 AM
DYRON MURPHY ARCHITECTS, P.C.

SIGNAGE LEGEND

*ALL SIGNAGE TO BE ADA TACTILE TEXT AND BRAILLE, UNO

TYPE 1	ALLOY SYSTEM 6"X8" NON-GLARE LENS TRANSPARENCY INSERT RUBBER FASTENERS
TYPE 2	ALLOY SYSTEM 6"X8"
TYPE 3	ALLOY SYSTEM 6"X8" W/ OCCUPANCY SLIDER
TYPE 4	ALUMINUM REVERSE CHANNEL ARCHITECTURAL LETTERS *REFER TO DRAWINGS AND INTERIOR ELEVATIONS FOR SIZE, MATERIAL, AND LOCATIONS
TYPE 5	SHEET METAL ALUMINUM, LASER CUT WITH FASTENERS
TYPE 6	ACRYLIC 6"X8" COLOR TBD
TYPE 7	VINYL WALL GRAPHIC REFER TO ELEVATIONS FOR DESIGNS
TYPE 8	VINYL FILM ETCHED GLASS LOOK *REFER TO DOOR AND WINDOW TYPES FOR LOCATIONS AND PATTERN.
TYPE 9	ACRYLIC LOGO WITH STANDOFF ALUMINUM MOUNTS
TYPE 10	CUSTOM WALL WRAP
EXIT	ALLOY SYSTEM 3"X6"
EVAC	ALLOY SYSTEM 10.5"X11" EVACUATION PLAN NON-GLARE LENS *TO HOLD 8.5"X11" EVACUATION INSERT
MO	ALLOY SYSTEM 4"X8" MAXIMUM OCCUPANCY

HOTEL - SIGNAGE SCHEDULE

ROOM NUMBER	ROOM NAME	SIGNAGE TYPE	SIGN MESSAGE	Sign Type
201	DBL QUEEN 'A'	S1		
202	DBL QUEEN 'A'	S1		
203	DBL QUEEN 'A'	S1		
204	KING 'C'	S1		
205	KING 'A'	S1		
206	KING 'A'	S1		
207	KING 'A'	S1		
208	DBL QUEEN 'A'	S1		
209	DBL QUEEN 'C'	S1		
210	DBL QUEEN 'A'	S1		
211	DBL QUEEN 'A'	S1		
212	DBL QUEEN 'A'	S1		
213	DBL QUEEN 'A'	S1		
214	KING 'A'	S1		
215	KING 'A'	S1		
216	KING 'A'	S1		
217	KING 'A'	S1		
218	DBL QUEEN 'A'	S1		
219	DBL QUEEN 'C'	S1		
220	DBL QUEEN 'A'	S1		
221	DBL QUEEN ADA 'B'	S1		
222	DBL QUEEN 'A'	S1		
223	LINEN	S1	HOUSEKEEPING	
224	DBL QUEEN 'A'	S1		
225	ELEVATOR LOBBY	S1		
226	DBL QUEEN 'A'	S1		
230	STAIR #2	S1		
300	KING ADA "B"	S1		

HOTEL - SIGNAGE SCHEDULE

ROOM NUMBER	ROOM NAME	SIGNAGE TYPE	SIGN MESSAGE	Sign Type
100	KING ADA "B"	S1		
101	DBL QUEEN 'A'	S1		
102	DBL QUEEN 'C'	S1		
103	DBL QUEEN 'A'	S1		
104	KING 'A'	S1		
105	KING 'A'	S1		
106	KING 'A'	S1		
107	KING 'A'	S1		
108	DBL QUEEN 'A'	S1		
109	DBL QUEEN 'C'	S1		
118	CHUTE ROOM	S1		
120	LAUNDRY	S1		
122	DRYERS	S1		
123	LINEN	S1	HOUSEKEEPING	
124	PBX	S1		
126	BREAKROOM	S1		
128	OUTDOOR MAINTENANCE EQUIPMENT	S1		
130	SEASONAL STORAGE	S1		
133	MECHANICAL	S1		
134	ELECTRICAL	S1		
136	GUEST LAUNDRY	S1		
137	FITNESS CENTER	S1		
138	PUBLIC RESTROOM	S1		
139	PUBLIC RESTROOM	S1		
140	MECHANICAL	S1		
144	STORAGE	S1		
145	STAIR #2	S1		
200	KING ADA "B"	S1		

RESTAURANT- SIGNAGE SCHEDULE

ROOM NUMBER	SIGN NUMBER	ROOM NAME	SIGNAGE TYPE	SIGN MESSAGE	Sign Type
502	102	BOARDROOM	S1		
503	103	MEN	S1		
504	104	WOMEN	S1		
506	100B	ENTRANCE B	EXT		
508	108A	KITCHEN	S1		
508	108B	KITCHEN	S1		
508	108C	KITCHEN	S1		
509	109B	BALLROOM B	S1		
509	109A	BALLROOM A	S1		
509	109C	BALLROOM C	S1		
509	109D	BALLROOM D	S1		
510	110	CORRIDOR 2	S1		
511	111	CHAIR/TABLE STORAGE	S1		
512	112	LINEN STORAGE	S1		
513	113	JANITORIAL	S1		
514	114	OFFICE	S1		
515	115	ELECTRICAL	S1		
516	116	MECHANICAL	S1		
518	118	OFFICE	S1		
519	119	JANITORIAL	S1		
520	120	DRY STORAGE	S1		
521	121	RESTROOM	S1		
522	122	GENERAL STORAGE	S1		
524	124	I.T.	S1		

HOTEL - SIGNAGE SCHEDULE

ROOM NUMBER	ROOM NAME	SIGNAGE TYPE	SIGN MESSAGE	Sign Type
401	DBL QUEEN 'A'	S1		
402	DBL QUEEN 'A'	S1		
403	DBL QUEEN 'A'	S1		
404	KING 'C'	S1		
405	KING 'A'	S1		
406	KING 'A'	S1		
407	KING 'A'	S1		
408	DBL QUEEN 'A'	S1		
409	DBL QUEEN 'C'	S1		
410	DBL QUEEN 'A'	S1		
411	DBL QUEEN 'A'	S1		
412	DBL QUEEN 'A'	S1		
413	DBL QUEEN 'A'	S1		
414	KING 'A'	S1		
415	KING 'A'	S1		
416	KING 'A'	S1		
417	KING 'A'	S1		
418	DBL QUEEN 'A'	S1		
419	DBL QUEEN 'C'	S1		
420	DBL QUEEN 'A'	S1		
421	DBL QUEEN ADA 'B'	S1		
422	DBL QUEEN 'A'	S1		
423	LINEN	S1	HOUSEKEEPING	
424	DBL QUEEN 'A'	S1		
426	DBL QUEEN 'A'	S1		
429	STAIR #1	S1		
430	STAIR #2	S1		
431	STORAGE	S1		

HOTEL - SIGNAGE SCHEDULE

ROOM NUMBER	ROOM NAME	SIGNAGE TYPE	SIGN MESSAGE	Sign Type
301	DBL QUEEN 'A'	S1		
302	DBL QUEEN 'A'	S1		
303	DBL QUEEN 'A'	S1		
304	KING 'C'	S1		
305	KING 'A'	S1		
306	KING 'A'	S1		
307	KING 'A'	S1		
308	DBL QUEEN 'A'	S1		
309	DBL QUEEN 'C'	S1		
310	DBL QUEEN 'A'	S1		
311	DBL QUEEN 'A'	S1		
312	DBL QUEEN 'A'	S1		
313	DBL QUEEN 'A'	S1		
314	KING 'A'	S1		
315	KING 'A'	S1		
316	KING 'A'	S1		
317	KING 'A'	S1		
318	DBL QUEEN 'A'	S1		
319	DBL QUEEN 'C'	S1		
320	DBL QUEEN 'A'	S1		
321	DBL QUEEN ADA 'B'	S1		
322	DBL QUEEN 'A'	S1		
323	LINEN	S1	HOUSEKEEPING	
324	DBL QUEEN 'A'	S1		
325	ELEVATOR LOBBY	S1		
326	DBL QUEEN 'A'	S1		
329	STAIR #1	S1		
330	STAIR #2	S1		
331	STORAGE	S1		
400	KING ADA "B"	S1		

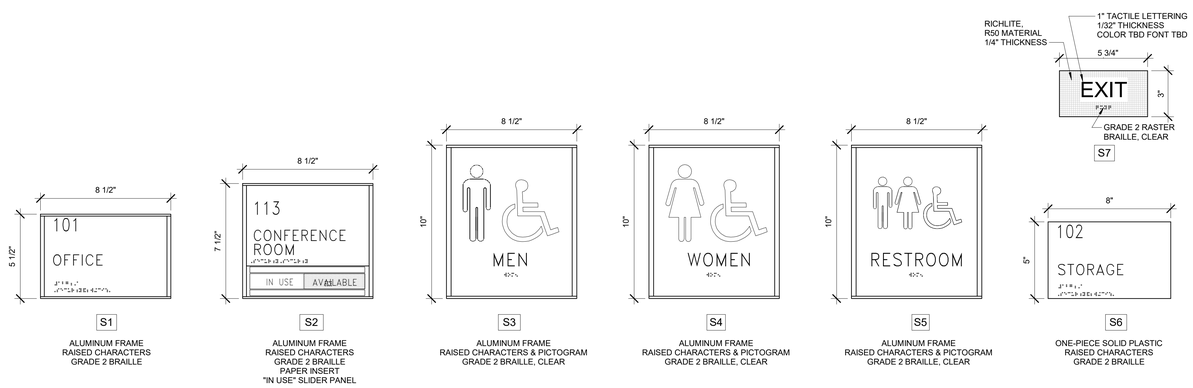

A6 **SIGN TYPES**
3" = 1'-0"

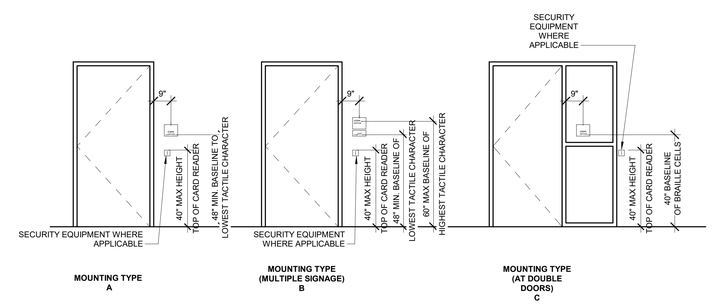

A3 **TYPICAL SIGNAGE MOUNTING**
3/8" = 1'-0"

STAMP

STATE OF NEW MEXICO
DYRON V. MURPHY
No. 3713
11/3/2023
REGISTERED ARCHITECT

DYRON MURPHY ARCHITECTS, P.C.

4505 Montbel Place NE, Albuquerque, New Mexico 87107

SHIPROCK PINNACLE HOTEL & RESTAURANT

SHIPROCK, NEW MEXICO

100% CONSTRUCTION DOCUMENTS

ISSUED FOR CONSTRUCTION

NOVEMBER 3, 2023

PROJECT NUMBER	DRAWN BY	PROJ MGR
2022.10	Author	Designer

SIGNAGE SCHEDULES, TYPES AND MOUNTING

Sheet Title

Sheet Number of

ID201

11/6/2023 11:21:18 AM C:\Revit Local\Shiprock Pinnacle_NAM_dlevitovich_dmarshbeck_cxm.rvt
DYRON MURPHY ARCHITECTS, P.C.

FINISH NOTES

A. FIELD VERIFY ALL EXISTING CONDITIONS ON SITE PRIOR TO FABRICATION OR CONSTRUCTION.
B. CONTRACTOR TO NOTIFY THE ARCHITECT OF ANY DISCREPANCIES OR CONFLICTS IN THESE DOCUMENTS.
C. PROVIDE ALL FINISH MATERIALS AS INDICATED ON THE DRAWINGS AND AS SCHEDULED IN MATERIAL SCHEDULE ON SHEET ID601.
D. PROVIDE COLORED FLOOR PATTERNS FOR APPROVAL PRIOR TO INSTALLATION.
E. PROVIDE A DEMONSTRATION WALL OF EACH PAINT SPECIFIED FOR APPROVAL PRIOR TO INSTALLATION. COORDINATE DEMONSTRATION WALL WITH ARCHITECT.
F. ALL WALLS TO BE PAINTED **"P-1"** U.N.O.
G. ALL CEILINGS TO BE PAINTED **"P-2"** U.N.O.
H. ALL OPEN TO STRUCTURE TO BE PAINTED **"P-3"** U.N.O.
I. ALL HOLLOW METAL DOOR FRAMES TO BE PAINTED **"P-4"** U.N.O.
J. REFER TO FINISH PLANS FOR LOCATIONS OF ACCENT PAINT COLORS AND OTHER WALL FINISHES.
K. REFER TO FLOOR FINISH PLANS FOR LOCATIONS OF ALL FLOOR TYPES AND PATTERNS.
L. REFER TO REFLECTED CEILING PLANS FOR ALL CEILING, SOFFIT AND OPEN TO STRUCTURE COLOR LOCATIONS.
M. REFER TO INTERIOR ELEVATIONS FOR LOCATIONS AND PATTERNS OF FINISHES.
N. ALL CHANGES IN FLOOR MATERIAL TO OCCUR AT CENTER LINE OF DOOR FRAMES U.N.O.
O. PROVIDE TRANSITION STRIP AND REDUCER WHERE CHANGES IN FLOORING MATERIAL OCCURS. COLOR TO BE TBD, REFER TO SHEET ID601 FOR DETAILS.
P. ALL AREAS TO RECEIVE TILE FLOORING SHALL HAVE 4" MIN. COVE BASE CONTINUOUS AT BASE OF WALL WHERE THERE IS NO WALL TILE.
Q. GROUT SHALL BE SEALED IN ALL FLOOR AND WALL TILE APPLICATIONS PER MANUFACTURER'S RECOMMENDATIONS.
R. PROVIDE SCHLUTER ALUMINUM TILE TRIM AT ALL HORIZONTAL AND VERTICAL EXPOSED TILE EDGES AND CORNERS.

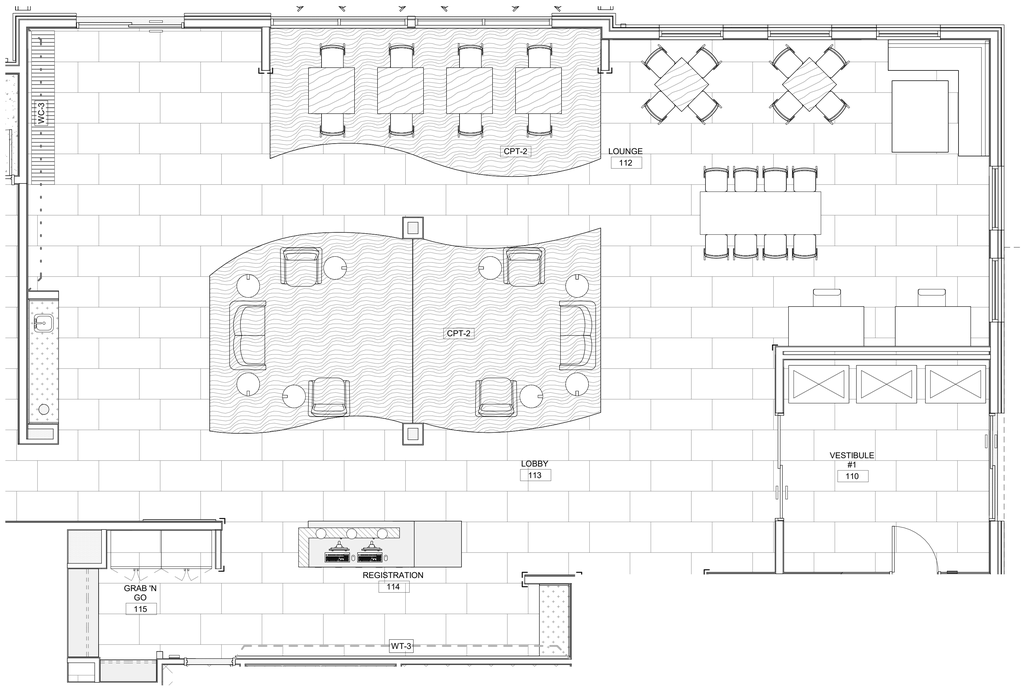

B5 **1st FLOOR LOUNGE - LOBBY - RECEPTIONIST**
1/4" = 1'-0"

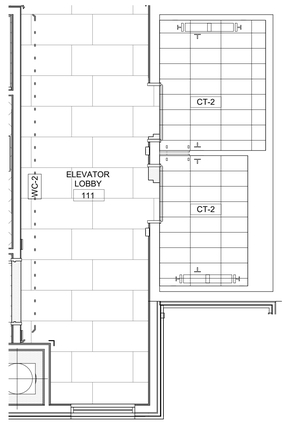

B2 **ELEVATOR LOBBY - 111**
1/4" = 1'-0"

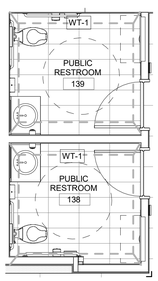

A5 **1st FLOOR - RESTROOMS**
1/4" = 1'-0"

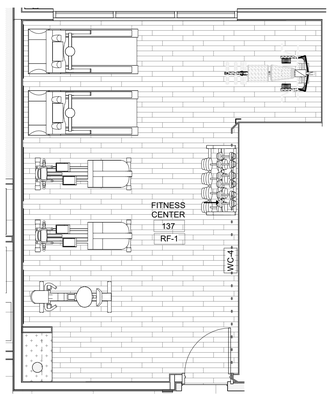

A4 **1st FLOOR - FITNESS CENTER**
1/4" = 1'-0"

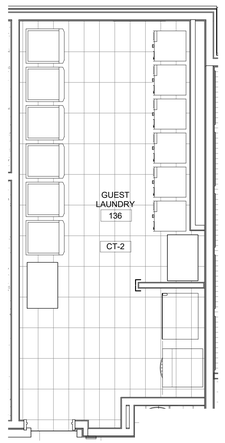

A3 **GUEST LAUNDRY - 136**
1/4" = 1'-0"

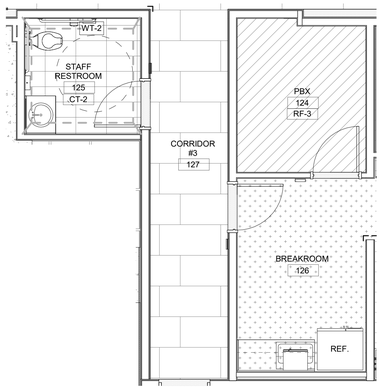

A2 **1st FLOOR - STAFF ENTRY - RESTROOM - BREAKROOM**
1/4" = 1'-0"

STAMP

DYRON MURPHY ARCHITECTS, P.C.

4505 Montbel Place NE, Albuquerque, New Mexico 87107

SHIPROCK PINNACLE HOTEL & RESTAURANT

SHIPROCK, NEW MEXICO

100% CONSTRUCTION DOCUMENTS

ISSUED FOR CONSTRUCTION

NOVEMBER 3, 2023

PROJECT NUMBER	DRAWN BY	PROJ MGR
2022.10	Author	Designer

LARGE SCALE FINISH PLANS (PUBLIC AREAS)

Sheet Title

Sheet Number of

ID401

11/6/2023 9:30:42 AM C:\Revit Local\Shiprock Pinnacle_Hotel_dbelbouch_dm-architects_central.rvt
DYRON MURPHY ARCHITECTS, P.C.

ID MATERIAL SCHEDULE								
Material: MFS_Order		NAME	MANUFACTURER	MODEL	SIZE	COLOR	LOCATIONS	DESCRIPTION
3FORM								
3FORM	3F-1	3FORM VARIA	3FORM	FREESTANDING PARTITION 200.57, POWDER COATED ARCHITECTURAL BRONZE	48" X 96" X 3/8"	CUSTOM DIGITAL PRINT	HOTEL LOBBY	VARIA DIGITAL PRINTING TBD, 3/8", FRONT AND BACK FINISH: SANDSTONE
BASE								
BASE	B-1	TILE BASE	ARIZONA TILE	MATTE	3"	CALDO	GUEST ENTRY / BATHROOMS	
BASE	B-2	RUBBER BASE	TARKETT	TA2	4"	SADDLEBROOK WB	SEE FINISH PLANS AND INTERIOR ELEVATIONS FOR LOCATIONS	
BASE	B-4	WOOD BASE			4"	WETLANDS - 150	SEE FINISH PLANS AND INTERIOR ELEVATIONS FOR LOCATIONS	
CARPET								
CARPET	CPT-1	BROADLOOM CARPET	SHAW	5T518 - 16762	9" X 36"	VINTAGE GOLD	HOUSE KEEPING EXECUTIVE 116 / GM OFFICE 117 & BOARDROOM 502	
CARPET	CPT-2	BROADLOOM CARPET	DURKIN	ABSTRACT ARTISTRY - SIDE MATCH - 42OZ	BROADLOOM - 72" X 88"	CUSTOM - QT100086	HOTEL COORIDORS	TEXTURED PATTERNED CUT & LOOP
CEILING								
CEILING	ACT-1	ACOUSTICAL CEILING TILE	ARMSTRONG	ULTIMA WITH SILHOUETTE XL 9/16" BOLT SLOT 1/8" REVEAL IN BLIZZARD	24" X 24"	WHITE	SEE REFLECTED CEILING PLANS	BEVELED TEGULAR 9/16
CEILING	ACT-2	ACOUSTICAL CEILING TILE	ARMSTRONG	ULTIMA WITH SILHOUETTE XL 9/16" BOLT SLOT 1/8" REVEAL IN BLIZZARD	24" X 48"	WHITE	SEE REFLECTED CEILING PLANS	BEVELED TEGULAR 9/16
CEILING	ACT-3	ACOUSTICAL CEILING TILE	ARMSTRONG	KITCHEN ZONE - ITEM NO. 672	24" X 48" X 5/8"	WHITE (WH)	RESTAURANT - KITCHEN	15/16" SQUARE LAY-IN
CEILING	CL-1	CEILING SYSTEM - LINEAR WOOD LOOK	ARMSTRONG	WOODWORKS LINEAR	4" X 96" 3/4"	QUARTERED SAPELE (NQS)	HOTEL LOBBY & RESTAURANT CORRIDER	EDGE PROFILE: BEVELED
CEILING	CL-2	CEILING SYSTEM - ACOUSTIC CLOUD	ARMSTRONG	SOUNDSCAPES SHAPES PATTERN SSSH 1	5'-9" X 3'-4"	5448 IN PECAN (PC)	RESTAURANT	
CEILING	CL-3	CEILING SYSTEM - ACOUSTIC CLOUD	ARMSTRONG	SOUNDSCAPES SHAPES PATTERN SSSH 1	5'-9" X 3'-4"	5448 IN SHELL (SH)	BALLROOM	PARALLELOGRAM
CERAMIC TILE								
CERAMIC TILE	CT-1	BORGO	ARIZONA TILE	MATTE	24" X 48"	CALDO	PUBLIC AREAS	1/3 STAGGERED TILE PATTERN
CERAMIC TILE	CT-2	BORGO	ARIZONA TILE	MATTE	12" X 24"	CALDO	PUBLIC RESTROOMS	1/3 STAGGERED TILE PATTERN
CERAMIC TILE	CT-3	SHIBUSA	ARIZONA TILE	MATTE	2" X 2"	TORTORA	GUEST BATH SHOWERS	BASKETWEAVE MESH
FABRIC SHADE								
FABRIC SHADE	FS-1	CLASSIC BLACKOUT 0700	MECHOSHADE	0700	SEE WINDOW SCHEDULE	(OPAQUE) - 0701 WHITE	GUEST ROOMS / BALLROOM / BOARDROOM	FASCIA FABRIC IN ROOMS ONLY (SILVER BIRCH 1500-1519)
FABRIC SHADE	FS-2	THERMOVEIL 1500	MECHOSHADE	1500	SEE WINDOW SCHEDULE	(SILVER BIRCH) 1519	SEE FINISH PLANS	TYPICAL FASCIA: CLEAR ANODIZED
FABRIC SHADE	FS-3	THERMOVEIL 1500	MECHOSHADE	1500	SEE WINDOW SCHEDULE	(TAUPE) 1524	SEE FINISH PLANS	TYPICAL FASCIA: CLEAR ANODIZED
GROUT								
GROUT	GT-1	GROUT	CUSTOM	#135	1/8" THICKNESS	MUSHROOM	TILE AREAS	
GROUT	GT-2	GROUT	CUSTOM	#185	1/8" THICKNESS	NEW TAUPE	GUEST BATH SHOWERS	
LUXURY VINYL PLANK								
LUXURY VINYL PLANK	LVP-1	CORETEC - STRATUM 700	SHAW	024UV	7"x48"	MONTEREY OAK - 00211	GUEST BEDROOMS	STAGGER INSTALLATION
LUXURY VINYL PLANK	LVP-2	INLET II - COLLECTION UNITE II	SHAW	4372V	9"x48"	VALLEY - 72103	BALLROOM	HARRINGBONE INSTALLATION
LUXURY VINYL PLANK	LVP-3	UNION - COLLECTION: UNITE II	SHAW	4349V	9"x48"	CONCRETE VALLEY - 49103	BALLROOM	HARRINGBONE INSTALLATION
LUXURY VINYL TILE								
LUXURY VINYL TILE	LVT-1	SANDY DUNE	SHAW	CROSSING PATHS	18" X 18"	91240	RESTAURANT	REFERENCE PATTERN LAYOUT
LUXURY VINYL TILE	LVT-2	THATCH	SHAW	CROSSING PATHS	18" X 18"	91720	RESTAURANT	REFERENCE PATTERN LAYOUT
MISC								
MISC	FRP-1	FRP	MARLITE	P106	4' X 8'	BEIGE	RESTAURANT	SEE KITCHEN PLANS
MISC	TP-1	TOILET PARTITION	MARLITE	P106				
PAINT								
PAINT	P-1	PAINT	DUNN EDWARDS	EGGSHELL	N/A	CLASSIC WHITE - DEHW08	SEE FINISH PLANS AND INTERIOR ELEVATIONS FOR LOCATIONS	SEE FINISH PLANS
PAINT	P-2	PAINT	DUNN EDWARDS	EGGSHELL	N/A	WHISPER - DEW340	SEE FINISH PLANS AND INTERIOR ELEVATIONS FOR LOCATIONS	SEE FINISH PLANS
PAINT	P-3	PAINT	DUNN EDWARDS	EGGSHELL	N/A	WARM WHITE - DEW380	SEE FINISH PLANS AND INTERIOR ELEVATIONS FOR LOCATIONS	OPEN TO STRUCTURE
PAINT	P-4	PAINT	DUNN EDWARDS	EGGSHELL	N/A	CEDAR CHEST - DE6112	HOLLOW METAL DOOR FRAMES	SCUFFMASTER FOR ALL METAL FRAMES
PAINT	P-5	PAINT	DUNN EDWARDS	EGGSHELL	N/A	GLEN FALLS - DE6332	SEE FINISH PLANS AND INTERIOR ELEVATIONS FOR LOCATIONS	SEE FINISH PLANS
PLASTIC LAMINATE								
PLASTIC LAMINATE	PL-1	PLASTIC LAMINATE	WILSONART	8225K-79	REFERENCE MILLWORK	RANDOLPH FOREST	RECEPTION & HOST STAND COUNTERTOP BASE	MATCH PLASTIC LAMINATE WITH REAL WOOD
PLASTIC LAMINATE	PL-2	PLASTIC LAMINATE	WILSONART	8213K-28	REFERENCE MILLWORK	PHANTOM COCOA	TYPICAL CASEWORK / GUEST BATHROOMS	SEE INTERIOR ELEVATIONS
PLASTIC LAMINATE	PL-3	PLASTIC LAMINATE	NATURAL COTTON	4946-38	REFERENCE MILLWORK	NATURAL COTTON	B.O.H.	SEE INTERIOR ELEVATIONS
RESILIENT FLOORING								
RESILIENT FLOORING	RF-1	PERFORMANCE VINYL TILE	ECORE	HERITAGE MOTIVATE	6.25" X 48"	ROCKPORT 1006	FITNESS CENTER	SEE FINISH PLANS
RESILIENT FLOORING	RF-2	MARMOLEUM COMPOSITION TILE	FORBO	MCT-3279	13" X 13"	DUNE	B.O.H.	SEE FINISH PLANS
RESILIENT FLOORING	RF-3	ELECTRO CONDUCTIVE FLOOR TILE	GERFLOR	0353 BEIGE	25" x 25"	BEIGE	PBX - ROOM 124 / I.T. 524	SEE FINISH PLANS
RESILIENT FLOORING	RF-4	LRV-30 WELDROD: WR-146 ALTROMASTIC 100 A1M20	ALTRO	K30907	N/A	BISCUIT	RESTAURANT KITCHEN FLOORING	SEE FINISH PLANS
SEALED CONCRETE								
SEALED CONCRETE	SC-1	SEALED/ STAINED/ POLISHED CONCRETE	SHERWIN WILLIAMS	H&C CLARISHIELD WATER-BASED NATURAL LOOK SEALER (LOW SHEEN)	N/A	CRYSTAL-CLEAR, NON-YELLOWING FORMULA	SEE FINISH PLANS	SEE FINISH PLANS
SOLID SURFACE								
SOLID SURFACE	SS-1	SOLID SURFACE	WILSONART	Q4052	REFERENCE FLOOR PLAN	CAPOGROSSI QUARTZ	RECEPTION & HOST STAND COUNTERTOP	SEE INTERIOR ELEVATIONS
SOLID SURFACE	SS-2	SOLID SURFACE	WILSONART	Q4031	REFERENCE MILLWORK	DESERT WIND	TYPICAL CASEWORK / GUEST BATHROOMS & WINDOW SILLS	SEE INTERIOR ELEVATIONS
WALL COVERING								
WALL COVERING	WC-1	WALL COVERING	MOMENTUM	TYPE II VERSA WALLCOVERING	N/A	A204-720 CITRINE	SEE FINISH PLANS AND INTERIOR ELEVATIONS FOR LOCATIONS	
WALL COVERING	WC-2	WALL COVERING	MOMENTUM	TYPE II VERSA WALLCOVERING	N/A	A204-323 BLUE MOON	SEE FINISH PLANS AND INTERIOR ELEVATIONS FOR LOCATIONS	
WALL COVERING	WC-3	WALL COVERING	MOMENTUM	TYPE II VERSA WALLCOVERING	N/A	A204-775 GOLD	SEE FINISH PLANS AND INTERIOR ELEVATIONS FOR LOCATIONS	
WALL TILE								
WALL TILE	WT-1	SHIBUSA	ARIZONA TILE	MATTE	9" X 11"	CREMA	GUEST BATHROOMS / @ VANITY SINK	
WALL TILE	WT-2	TIVOLI	ARIZONA TILE	MATTE	12" X 24"	BEIGE	GUEST BATH SHOWERS	
WALL TILE	WT-3	3D MESH MOUNT STACK	ARIZONA TILE	SCABOS SPLIT	5-7/8 × 24 Mesh Mount Sheet	SCABOS SPLIT	SEE FINISH PLANS AND INTERIOR ELEVATIONS FOR LOCATIONS	
WALL TILE	WT-4	SHIBUSA	ARIZONA TILE	MATTE	12" X 24"	CREMA	PUBLIC RESTROOMS	

MATERIAL SCHEDULE FINISH NOTES

A. **PAINT**
   a. REFER TO SPECIFICATIONS FOR ADDITIONAL INFORMATION OF PAINT SHEEN AND LOCATIONS.
      • USE THE FOLLOWING SHEENS FOR THE LOCATIONS NOTED:
         1. DOOR FRAMES- SEMI GLOSS
         2. WALLS- EGGSHELL
         3. CEILINGS- SATIN

B. **TILE:**
   a. ALL EXPOSED TILE EDGES, VERTICAL AND HORIZONTAL, RECEIVE ALUMINUM TILE TRIM, UNLESS OTHERWISE NOTED.
   b. PROVIDE TILE BASE AT ALL FLOOR TILE LOCATIONS, EXCEPT AT ADJACENT WALL WITH TILE AND UNLESS OTHERWISE NOTED. TILE BASE IS TO MATCH FLOOR TILE.
   c. LARGE FORMAT TILES ARE ANY TILES WITH A SIDE LONGER THAN 15 INCHES, AND REQUIRES AN "LFT" LARGE FORMAT TILE MORTAR, OR "MBM" MEDIUM BED MORTAR. NO THINSET OR MASTIC ARE ACCEPTABLE.
   d. ALL TILE GROUT LINES SHALL BE 1/4" WIDE UNLESS OTHERWISE NOTED.
   e. GROUT AT ALL FLOOR TILE LOCATIONS IS TO BE SEALED.

C. **CASEWORK:**
   a. AT ALL AREAS WHERE TILE BACKSPLASH IS SPECIFIED, NO SOLID SURFACE BACKSPLASH SHALL BE INSTALLED, UNLESS OTHERWISE NOTED.

D. **TRANSITION STRIPS- FLOORING:**
   a. AT ALL LOCATIONS WHERE DISSIMILAR FLOORING MEET, PROVIDE TRANSITION STRIP AS SPECIFIED.

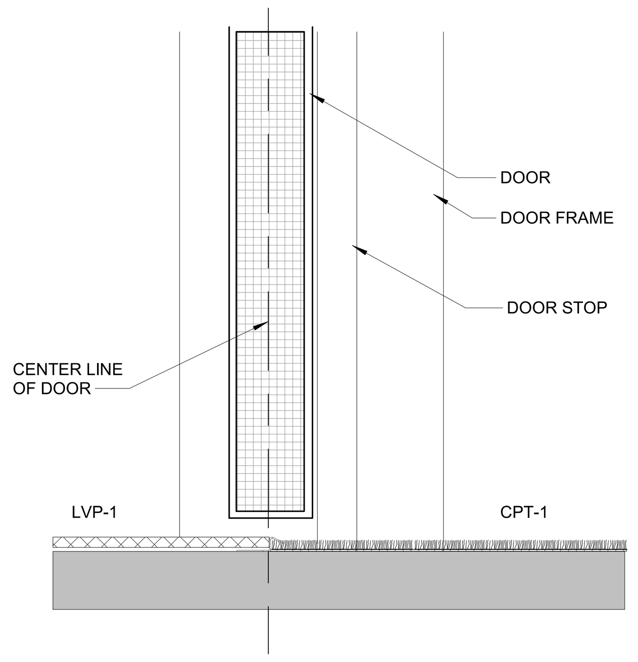

*TYPICAL AT ALL CHANGE OF FLOORING MATERIAL AT DOOR FRAMES:

ALL CHANGES IN FLOOR MATERIALS AT A DOOR FRAME SHALL OCCUR AT CENTERLINE OF DOOR.
ALL FLOOR FINISHES, UNO.

A6 FLOOR TRANSITION AT DOORS
3" = 1'-0"

STAMP

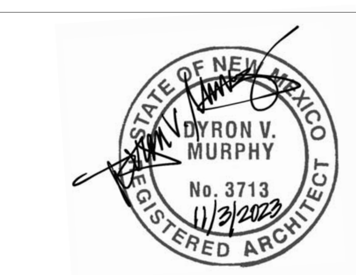

DYRON MURPHY ARCHITECTS, P.C.
4505 Montbel Place NE, Albuquerque, New Mexico 87107

SHIPROCK PINNACLE HOTEL & RESTAURANT
SHIPROCK, NEW MEXICO
100% CONSTRUCTION DOCUMENTS
ISSUED FOR CONSTRUCTION
NOVEMBER 3, 2023

PROJECT NUMBER	DRAWN BY	PROJ MGR
2022.10	ACR	RI

MATERIAL SCHEDULE AND DETAILS
Sheet Title

Sheet Number of
ID601

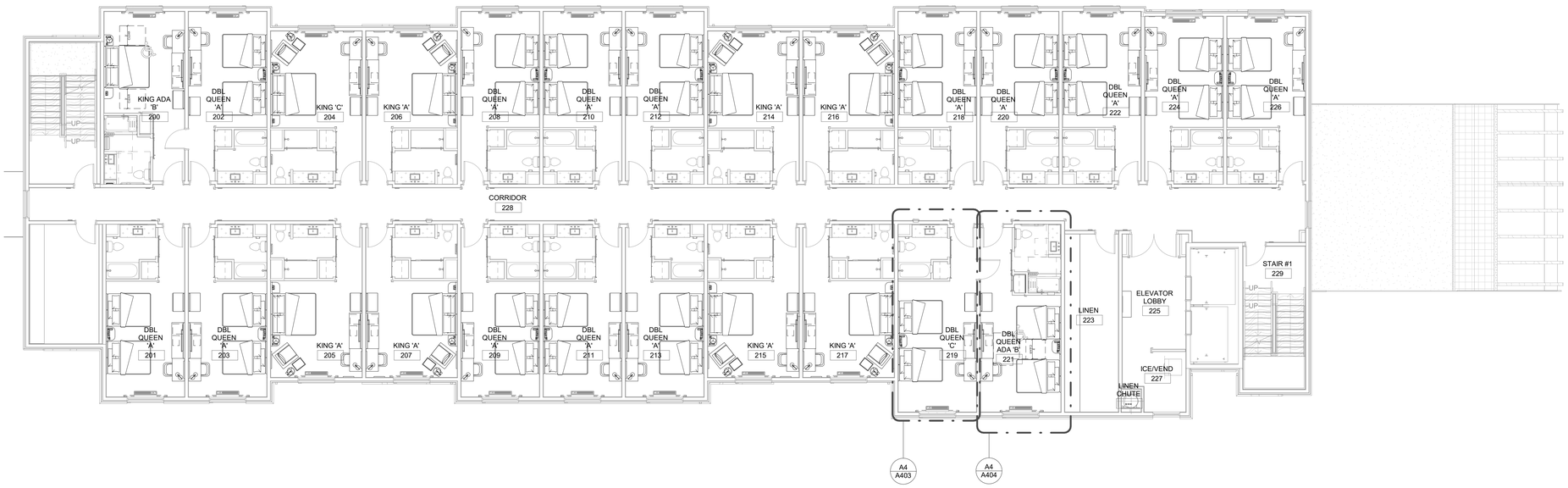

C6 **2ND FLOOR FURNITURE PLAN**
1/8" = 1'-0"

0 4' 8' 16'

N

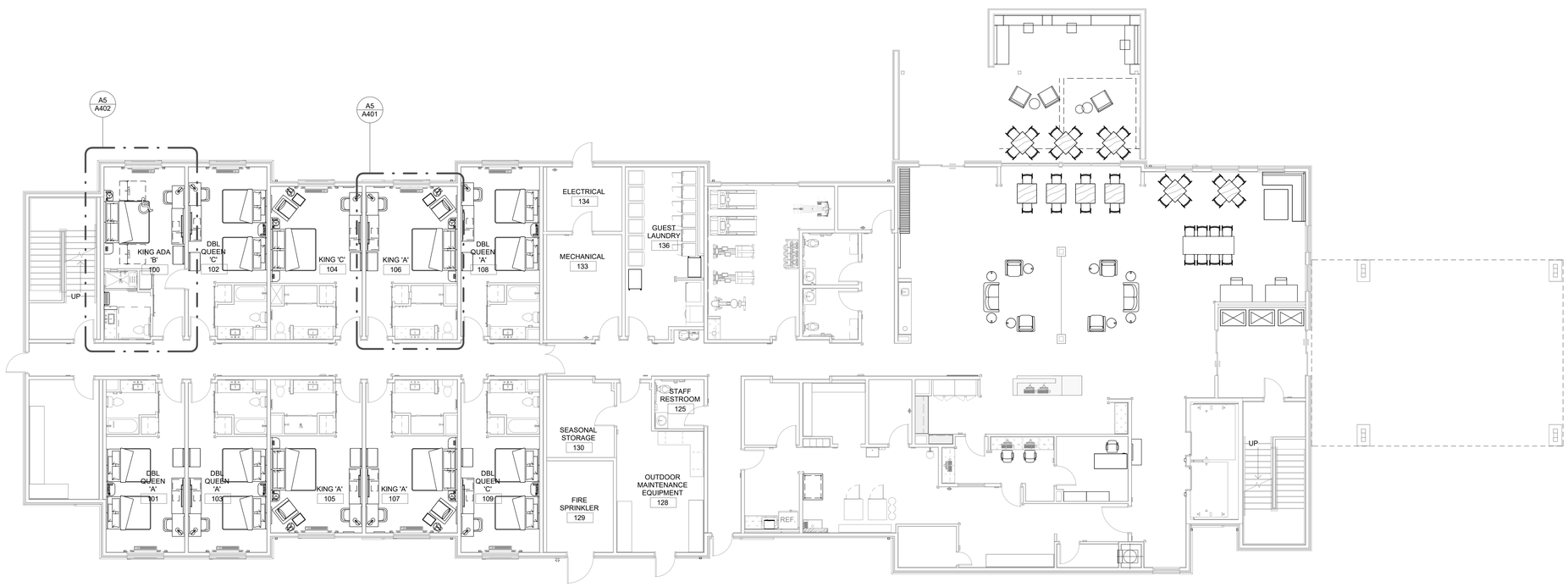

A6 **1ST FLOOR FURNITURE PLAN**
1/8" = 1'-0"

0 4' 8' 16'

N

FOR REFERENCE ONLY

STAMP

STATE OF NEW MEXICO
DYRON V. MURPHY
No. 3713
11/3/2023
REGISTERED ARCHITECT

DYRON MURPHY ARCHITECTS, P.C.

4505 Montbel Place NE, Albuquerque, New Mexico 87107

SHIPROCK PINNACLE HOTEL & RESTAURANT

SHIPROCK, NEW MEXICO

100% CONSTRUCTION DOCUMENTS

ISSUED FOR CONSTRUCTION

NOVEMBER 3, 2023

PROJECT NUMBER	DRAWN BY	PROJ MGR
2022.10	ACR	RI

FURNITURE PLAN - HOTEL - 1ST & 2ND FLOORS

Sheet Title

Sheet Number of

ID701

11/6/2023 9:30:58 AM C:\Revit Local\Shiprock Pinnacle_NEW_dlepbauch_dma-architects_com.rvt

DYRON MURPHY ARCHITECTS, P.C.

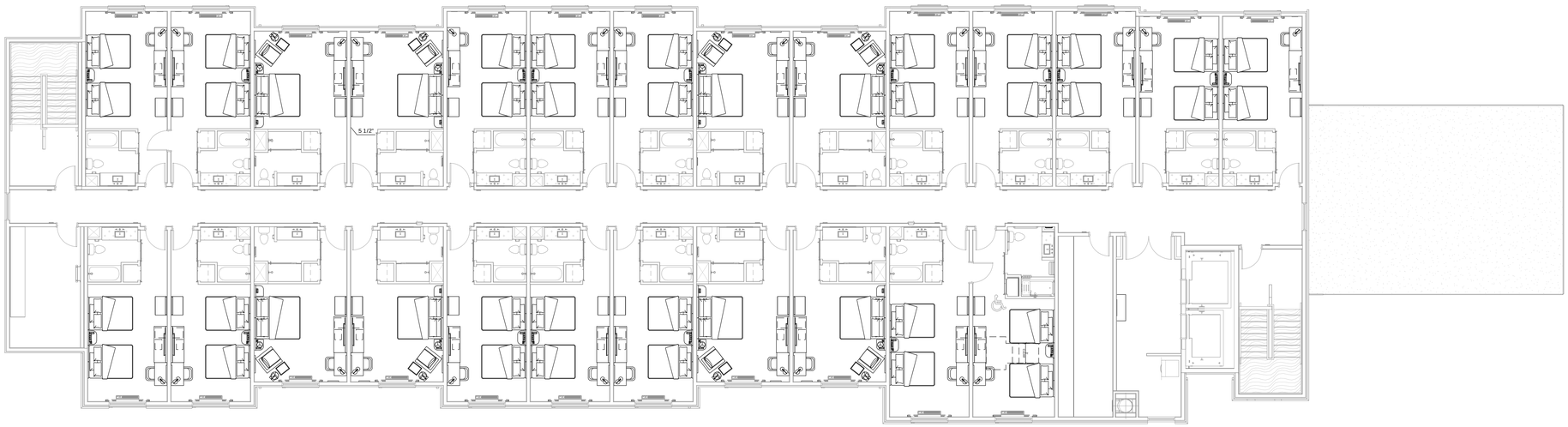

C6 **4TH FLOOR FURNITURE PLAN**
1/8" = 1'-0"

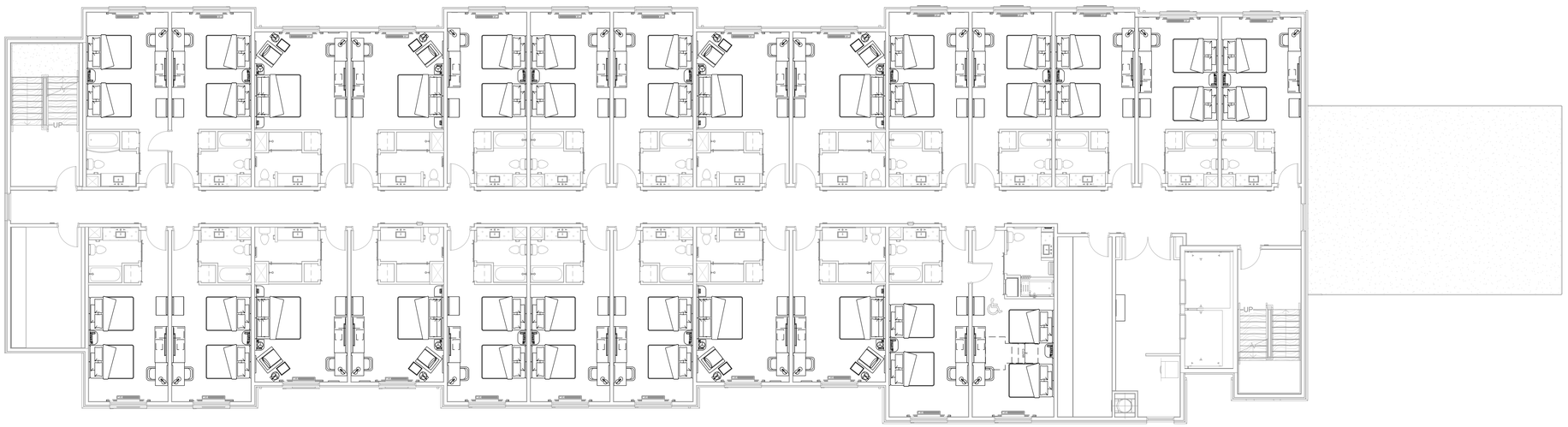

A6 **3RD FLOOR FURNITURE PLAN**
1/8" = 1'-0"

FOR REFERENCE ONLY

STAMP

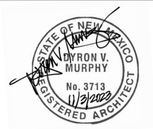

DYRON MURPHY ARCHITECTS, P.C.

4505 Montbel Place NE, Albuquerque, New Mexico 87107

SHIPROCK PINNACLE HOTEL & RESTAURANT

SHIPROCK, NEW MEXICO

100% CONSTRUCTION DOCUMENTS

ISSUED FOR CONSTRUCTION

NOVEMBER 3, 2023

PROJECT NUMBER	DRAWN BY	PROJ MGR
2022.10	ACR	RI

FURNITURE PLAN - HOTEL - 3RD & 4TH FLOORS

Sheet Title

Sheet Number of

ID702

FURNITURE NOTES

A. FURNITURE INDICATED IN THESE PLANS ARE TO BE PROCURED BY OWNER, UNLESS INDICATED OTHERWISE ON PLANS OR SPECIFICATIONS.
B. THE CONTRACTOR TO NOTIFY THE ARCHITECT OF ANY CONFLICTS OR OMISSIONS PERTAINING TO THE FURNITURE INDICATED ON THESE SHEETS.
C. CONTRACTOR SHALL COORDINATE WITH CODE SHEETS AND ALL OTHER APPLICABLE CODES TO ENSURE THAT INSTALLATION OF FURNITURE COMPLIES WITH REQUIREMENTS.
D. CONTRACTOR SHALL COORDINATE ELECTRICAL, IT, MECHANICAL AND PLUMBING AND ALL OTHER ON-FIELD REQUIREMENTS FOR INSTALLATION SYSTEM INDICATED.

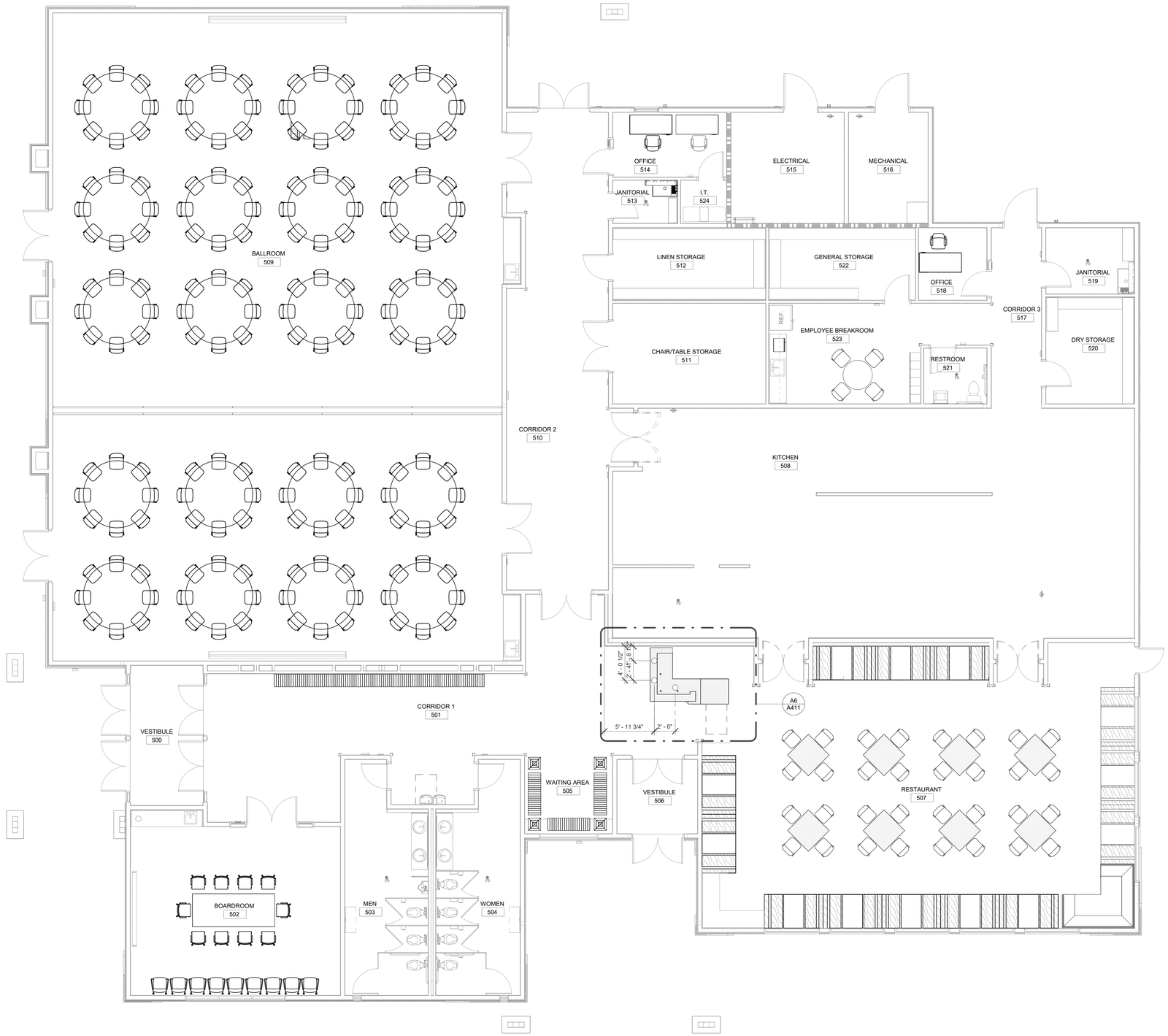

A6 **FURNITURE PLAN**
3/16" = 1'-0"

FOR REFERENCE ONLY

STAMP

STATE OF NEW MEXICO
DYRON V. MURPHY
No. 3713
11/3/2023
REGISTERED ARCHITECT

DYRON MURPHY ARCHITECTS, P.C.

4505 Montbel Place NE, Albuquerque, New Mexico 87107

SHIPROCK PINNACLE HOTEL & RESTAURANT

SHIPROCK, NEW MEXICO

100% CONSTRUCTION DOCUMENTS

ISSUED FOR CONSTRUCTION

NOVEMBER 3, 2023

PROJECT NUMBER	DRAWN BY	PROJ MGR
2022.10	Author	Designer

FURNITURE PLAN - RESTAURANT

Sheet Title

Sheet Number of

ID703

DYRON MURPHY ARCHITECTS, P.C.

FOODSERVICE EQUIPMENT SCHEDULE

ITEM	QUANTITY	BUY OUT	FABRICATED	MILLWORK	N.I.K.E.C.	PROVIDED BY	INSTLLED BY	EQUIPMENT DESCRIPTION	EQUIP MANUFACTURER	EQUIP MODEL NUMBER	EQUIPMENT REMARKS
1	1	X				KEC	KEC	AIR CURTAIN	MARS AIR SYSTEMS	LPV242-1UA-OB	w/ DOOR MICROSWITCHES
2	1	X				KEC	KEC	DRY STORAGE SHELVING UNITS	METRO	CHROME	SEE FS PLANS FOR SIZE & CONFIGURATION
3	1	X				KEC	KEC	WALL SHELF	JOHN BOOS	PB-MSS824	WALL BACKING BY G.C. REQ'D
4	1	X				KEC	KEC	SERVICE FAUCET	FISHER	8253	
5	1	X				KEC	KEC	MOP SINK	JOHN BOOS	PBMS2820-12	
6	–							SPARE NUMBER			
7	1	X				KEC	KEC	CAN RACK	NEW AGE	1250	
8	8	X				KEC	KEC	DRY STORAGE SHELVING UNITS	METRO	CHROME	SEE FS PLANS FOR SIZE & CONFIGURATION
9	1				X	V	V	SODA SYSTEM	BY VENDOR	SODA SYSTEM	
10	–							SPARE NUMBER			
11	–							SPARE NUMBER			
12	–							SPARE NUMBER			
13	1	X				KEC	KEC	WALK-IN COOLER/FREEZER	AMERICAN PANEL	CUSTOM	SEE FS PLANS FOR SIZE & CONFIGURATION
14	1	X				KEC	KEC	COOLER EVAP COIL	AMERICAN PANEL	BEL0115BS6AM	
15	1	X				KEC	KEC	FREEZER EVAP COIL	AMERICAN PANEL	BEL0100BS6EE	
16	1	X				KEC	KEC	COOLER CONDENSING UNIT	AMERICAN PANEL	FFAP-A20Z-TFC-075	
17	1	X				KEC	KEC	FREEZER CONDENSING UNIT	AMERICAN PANEL	FFAL-126Z-TFC-075	
18	–							SPARE NUMBER			
19	19	X				KEC	KEC	WALK-IN STORAGE SHELVING UNITS	METRO	NK3 SERIES	SEE FS PLANS FOR SIZE & CONFIGURATION
20	5	X				KEC	KEC	SHEET PAN RACK	ADVANCE TABCO	PR18-3W	
21	–							SPARE NUMBER			
22	–							SPARE NUMBER			
23	2	X				KEC	KEC	DRY STORAGE SHELVING UNITS	METRO	CHROME	SEE FS PLANS FOR SIZE & CONFIGURATION
24	4	X				KEC	KEC	HAND SINK	ADVANCE TABCO	7-PS-58	WALL BACKING BY G.C. REQ'D
25	2	X				KEC	KEC	WALL SHELVING UNITS	ADVANCE TABCO	WS-12-78-16	WALL BACKING BY G.C. REQ'D
26	4	X				KEC	KEC	INGREDIENT BIN	RUBBERMAID	FG360088WHT	
27	1	X				KEC	KEC	WORK TABLE	ADVANCE TABCO	TKMS-30X78	
28	2	X				KEC	KEC	MOBILE EQUIPMENT STAND	ADVANCE TABCO	MT-SS-300	
29	1	X				KEC	KEC	20 QT. MIXER	HOBART	HL200	
30	1	X				KEC	KEC	SLICER	HOBART	HS7N-1	
31	1	X				KEC	KEC	PREP TABLE W/ SINK	FABRICATOR	STAINLESS STEEL	w/ FAUCET & LEVERWASTE
32	2	X				KEC	KEC	WALL SHELVING UNITS	ADVANCE TABCO	WS-12-72-16	WALL BACKING BY G.C. REQ'D
33	1	X				KEC	KEC	FOOD PROCESSOR	ROBOT COUPE	R2N	
34	1	X				KEC	KEC	IMMERSION BLENDER	ROBOT COUPE	MP450	
35	–							SPARE NUMBER			
36	1	X				KEC	GC	EXHAUST HOOD - TYPE I	CAPTIVE AIRE	6030ND-2-PSP-F	
37	1	X				KEC	KEC	FIRE SUPPRESSION SYSTEM	ANSUL	R-102	
38	2	X				KEC	KEC	6 O.B. RANGE W/ OVEN	IMPERIAL	IR-6-C	w/ CASTERS
39	1	X				KEC	KEC	BRAISING PAN	RATIONAL	IVARIO PRO L	
40	LOT	X				KEC	KEC	S/S WALL FLASHING	FABRICATOR	STAINLESS STEEL	
41	1	X				KEC	KEC	DOUBLE COMBI-OVENS	RATIONAL	ICP 6-FULL/6-FULL NG	
42	1	X				KEC	KEC	WATER FILTER - COMBI OVEN	RATIONAL	1900.1150US	
43	2	X				KEC	KEC	WALL SHELVING UNITS	ADVANCE TABCO	WS-12-72-16	WALL BACKING BY G.C. REQ'D
44	1	X				KEC	KEC	WORK TABLE	ADVANCE TABCO	KMS-306	
45	1	X				KEC	KEC	COOK & HOLD	ALTO SHAAM	1000-TH/I	
46	1	X				KEC	KEC	COMBI OVEN	RATIONAL	ICP 6-HALF G 120V 1 PH	w/ EQUIPMENT STAND & FILTER
47	1	X				KEC	KEC	WATER FILTER - COMBI OVEN	RATIONAL	1900.1150US	
48	1	X				KEC	KEC	CHAR BROILER	IMPERIAL	IRB-36	
49	1	X				KEC	KEC	REFRIGERATED BASE	TRUE	TRCB-82-84	
50	1	X				KEC	KEC	SALAMANDER BROILER	IMPERIAL	IRSB-36	WALL BACKING BY G.C. REQ'D
51	1	X				KEC	KEC	GRIDDLE	IMPERIAL	ITG-48	
52	1	X				KEC	KEC	2-FRYERS W/ FILTER SYSTEM	PITCO	SG14RS-2FD	
53	1	X				KEC	KEC	WORK TOP FREEZER	TURBO AIR	TWF-28SD-D2-N	
54	LOT	X				KEC	KEC	CORNER GUARDS & WALL CAPS	FABRICATOR	STAINLESS STEEL	
55	1	X				KEC	GC	EXHAUST HOOD - TYPE I	CAPTIVE AIRE	6030ND-2-PSP-F	
56	1	X				KEC	GC	ELECTRICAL CONTROL PACKAGE	CAPTIVE AIRE	DCV-21111	
57	5	X				KEC	KEC	TRASH RECEPTACLE	RUBBERMAID	FG354060GRAY	
58	1	X				KEC	KEC	CONVEYOR TOASTER	HATCO	TQ-800	
59	2	X				KEC	KEC	REFRIGERATED PREP TABLE	CONTINENTAL	SW60N24M-D	
60	1	X				KEC	KEC	HOT FOOD WELLS	WELLS	MDW500	
61	1		X			KEC	KEC	DOUBLE PASS SHELF	FABRICATOR	STAINLESS STEEL	
62	1		X			KEC	KEC	EXPO COUNTER	FABRICATOR	STAINLESS STEEL	
63	1		X			KEC	KEC	EXPO COUNTER	FABRICATOR	STAINLESS STEEL	
64	4				X	O	O	P.O.S. PRINTER	BY OWNER	P.O.S. PRINTER	
65	8	X				KEC	KEC	HEAT LAMPS	HATCO	DL775RTLBB-BK.1	
66	1	X				KEC	KEC	REFRIGERATOR	CONTINENTAL	2RNSA	
67	1	X				KEC	KEC	GLASS FILLER	FISHER	1400	
68	2				X	V	V	SODA DISPENSER	BY VENDOR	SODA DISPENSER	
69	4		X			KEC	KEC	WALL SHELVES	FABRICATOR	STAINLESS STEEL	WALL BACKING BY G.C. REQ'D
70	1	X				KEC	KEC	JUICE DISPENSER	BUNN	37300.0004	
71	2	X				KEC	KEC	COFFEE BREWER	BUNN	20900.0011	
72	2	X				KEC	KEC	COFFEE GRINDER	BUNN	35600.002	
73	2	X				KEC	KEC	ICE TEA BREWER	BUNN	36700.0041	
74	1	X				KEC	KEC	U/C REFRIGERATOR	CONTINENTAL	SW48N	
75	1		X			KEC	KEC	BEVERAGE COUNTER	FABRICATOR	STAINLESS STEEL	
76	3	X				KEC	KEC	TRASH RECEPTACLE	RUBBERMAID	FG263256GRAY	w/ DOLLY & SILVER SAVER LID
77	1		X			KEC	KEC	SOILED DISH TABLE W/ SCRAP SINK	FABRICATOR	STAINLESS STEEL	w/ PERFORATED BASKET & RACK SLIDES
78	1		X			KEC	KEC	DOUBLE SIDED RACKING SHELF	FABRICATOR	STAINLESS STEEL	w/ FLAT BAR RACK STOP
79	1	X				KEC	KEC	DISPOSER	SALVAJOR	200-SA-6-ARSS	
80	1	X				KEC	KEC	PRE-RINSE FAUCET	FISHER	2210-WB	
81	LOT		X			KEC	KEC	S/S WALL FLASHING	FABRICATOR	STAINLESS STEEL	
82	1	X				KEC	KEC	DISH MACHINE	CHAMPION	44 PRO	
83	2	X				KEC	KEC	GLASS RACK DOLLY	CAMBRO	CD2020110	
84	1		X			KEC	KEC	CLEAN DISH TABLE	FABRICATOR	STAINLESS STEEL	
85	1	X				KEC	GC	CONDENSATE HOOD	CAPTIVE AIRE	4830VHB-G	
86	1	X				KEC	KEC	WALL SHELVING UNIT W/ UTENSIL BAR	ADVANCE TABCO	PS-12-84	WALL BACKING BY G.C. REQ'D
87	1	X				KEC	KEC	THREE COMPARTMENT SINK	ADVANCE TABCO	FC-3-1824-24RL	w/ FAUCET(S) & LEVER WASTES
88	2	X				KEC	KEC	WALL SHELVING UNITS	ADVANCE TABCO	WS-12-36-16	WALL BACKING BY G.C. REQ'D
89	–							SPARE NUMBER			
90	2	X				KEC	KEC	SHELVING UNITS	METRO	NK3 SERIES	SEE FS PLANS FOR SIZE & CONFIGURATION
91	2	X				KEC	KEC	WATER FILTER	3M PURIFICATION	BEV130	
92	2	X				KEC	KEC	WALL SHELVING UNITS	ADVANCE TABCO	WS-12-48-16	WALL BACKING BY G.C. REQ'D
93	1	X				KEC	KEC	TRASH RECEPTACLE	RUBBERMAID	FG263200GRAY	w/ DOLLY & SILVER SAVER LID
94	4	X				KEC	KEC	COFFEE SERVER	FETCO	D450	
95	1		X			KEC	KEC	BEVERAGE COUNTER	FABRICATOR	STAINLESS STEEL	
96	3	X				KEC	KEC	MICROWAVE OVENS	ACP, INC	RCS10TS	
97	1	X				KEC	KEC	MICROWAVE SHELF	ADVANCE TABCO	MS-18-24	WALL BACKING BY G.C. REQ'D
98	5	X				KEC	KEC	HEAT LAMPS	HATCO	DL775RTLBB-BK.1	
99	1		X			KEC	KEC	PLATING TABLE	FABRICATOR	STAINLESS STEEL	
100	1		X			KEC	KEC	HOT PLATING TABLE	FABRICATOR	STAINLESS STEEL	
101	1	X				KEC	KEC	DROP-IN HOT FOOD UNIT	ALTO SHAAM	300-HWIS/D6	
102	1	X				KEC	KEC	MOBILE HOT FOOD CABINET	CRESCOR	H135SUA11	
103	1	X				KEC	KEC	FREEZER	CONTINENTAL	D1FNSA	
104	1	X				KEC	KEC	FLOOR TROUGH	EAGLE	ASFT-1248-FG	
105	1	X				KEC	KEC	ICE MACHINE	MANITOWOC	IYT1900A	
106	1	X				KEC	KEC	ICE MACHINE BIN	FOLLETT	SG1300S-48	
107	1	X				KEC	KEC	WATER FILTER	3M PURIFICATION	ICE195-S	
108	1	X				KEC	KEC	2-DOOR ROLL-IN REFRIGERATOR	CONTINENTAL	D2FNSA	
109	–							SPARE NUMBER			
110	–							SPARE NUMBER			
111	2	X				KEC	KEC	PORTABLE ICE BIN	BK RESOURCE	MIB-2411	

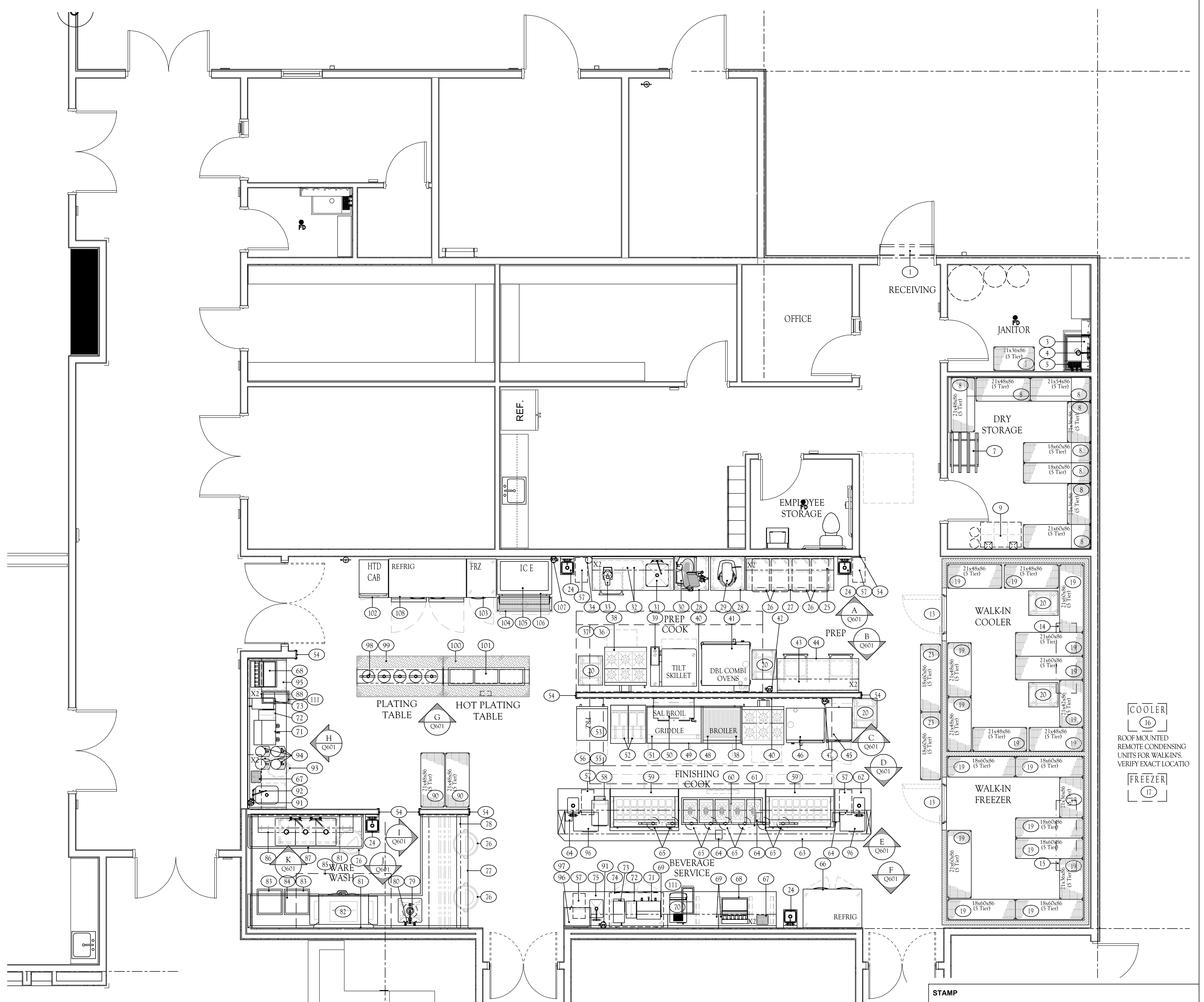

KITCHEN AREA PLAN

SCALE: 1/4" = 1'-0"

SCHEDULE NOTES:

1. ALL CONNECTIONS SHOWN IN THE SCHEDULE ARE SIZED AS THEY ACTUALLY OCCUR ON THE EQUIPMENT.
2. CONNECTIONS SHOWN ARE FOR ONE UNIT. TO DETERMINE TOTAL REQUIREMENTS, MULTIPLY BY NUMBER IN QUANTITY COLUMN.
3. WHEN EQUIPMENT IS NOTED AS EXISTING, UTILITY REQUIREMENTS SHOULD MATCH EXISTING AS INDICATED ON THE MANUFACTURER'S DATA PLATE.
4. WHERE INDICATED TO CONNECT IN OR THROUGH A VALVE COMPARTMENT, CONTRACTOR SHALL STUB-UP INTO VALVE COMPARTMENT AT HEIGHT INDICATED ON ROUGH-IN PLAN, CAP HIS WORK AND MAKE FINAL CONNECTIONS AFTER EQUIPMENT IS IN PLACE.
5. THE INTENT OF THE DRAWINGS AND SPECIFICATIONS REGARDING ELECTRICAL PRE-WIRING AND PLUMBING PRE-PIPING IS TO HAVE THE K.E.C. EXTEND TO AND TERMINATE ALL CONNECTIONS FOR THE EQUIPMENT IN THE LOCATIONS INDICATED IN THE EQUIPMENT SCHEDULE AND SPOT PLANS.
6. ALL ITEMS SHOWN WITH P.I. CONNECTIONS PLUG INTO RECEPTACLES FURNISHED BY THE K.E.C. AS PART OF THE EQUIPMENT.
7. ELECTRICAL, PLUMBING AND MECHANICAL CONTRACTORS TO PROVIDE ALL ROUGH-IN BUILDING SERVICES AND FINAL CONNECTION TO ALL FOOD SERVICE EQUIPMENT.

CONTRACT CODE LEGEND:

GC - GENERAL CONTRACTOR FURNISHED
O - OWNER FURNISHED
KEC - KITCHEN EQUIPMENT CONTRACTOR
E - EXISTING
F - FABRICATE
OT - BY OTHERS
P - PURCHASE
V - VENDOR FURNISHED

FABRICATION NOTES:

1. ALL S/S CUSTOM FABRICATION TO BE MANUFACTURED TO NSF STANDARDS BY APPROVED FABRICATOR.
2. CUSTOM REFRIGERATION TO BE FABRICATED TO NSF STANDARDS BY CERTIFIED NSF FABRICATOR.

HEALTH DEPARTMENT NOTES:

1. FLOORS AND BASE IN KITCHEN AREA TO BE LIGHT COLORED.
2. WALLS AND CEILINGS IN KITCHEN AREA SHALL BE LIGHT IN COLOR, NONABSORBENT, SMOOTH AND EASY TO CLEAN.
3. ALL KITCHEN EQUIPMENT AND INSTALLATION SHALL MEET OR EXCEED (NSF) NATIONAL SANITATION FOUNDATION STANDARDS OR EQUIVALENT.

STAMP

DYRON MURPHY ARCHITECTS, P.C.

4505 Montbel Place NE, Albuquerque, New Mexico 87107

SHIPROCK PINNACLE HOTEL & RESTAURANT

SHIPROCK, NEW MEXICO

100% CONSTRUCTION DOCUMENTS

ISSUED FOR CONSTRUCTION

NOVEMBER 3, 2023

PROJECT NUMBER	DRAWN BY	PROJ MGR
2022.10	SK/DK	SK

EQUIPMENT PLAN AND SCHEDULE

Sheet Title

Sheet Number of

Q101

5/3/2023 1:23:21 PM C:\Revit Locals\Shiprock Pinnacle_Restaurant_rirvinT8K3N.rvt

DYRON MURPHY ARCHITECTS, P.C.

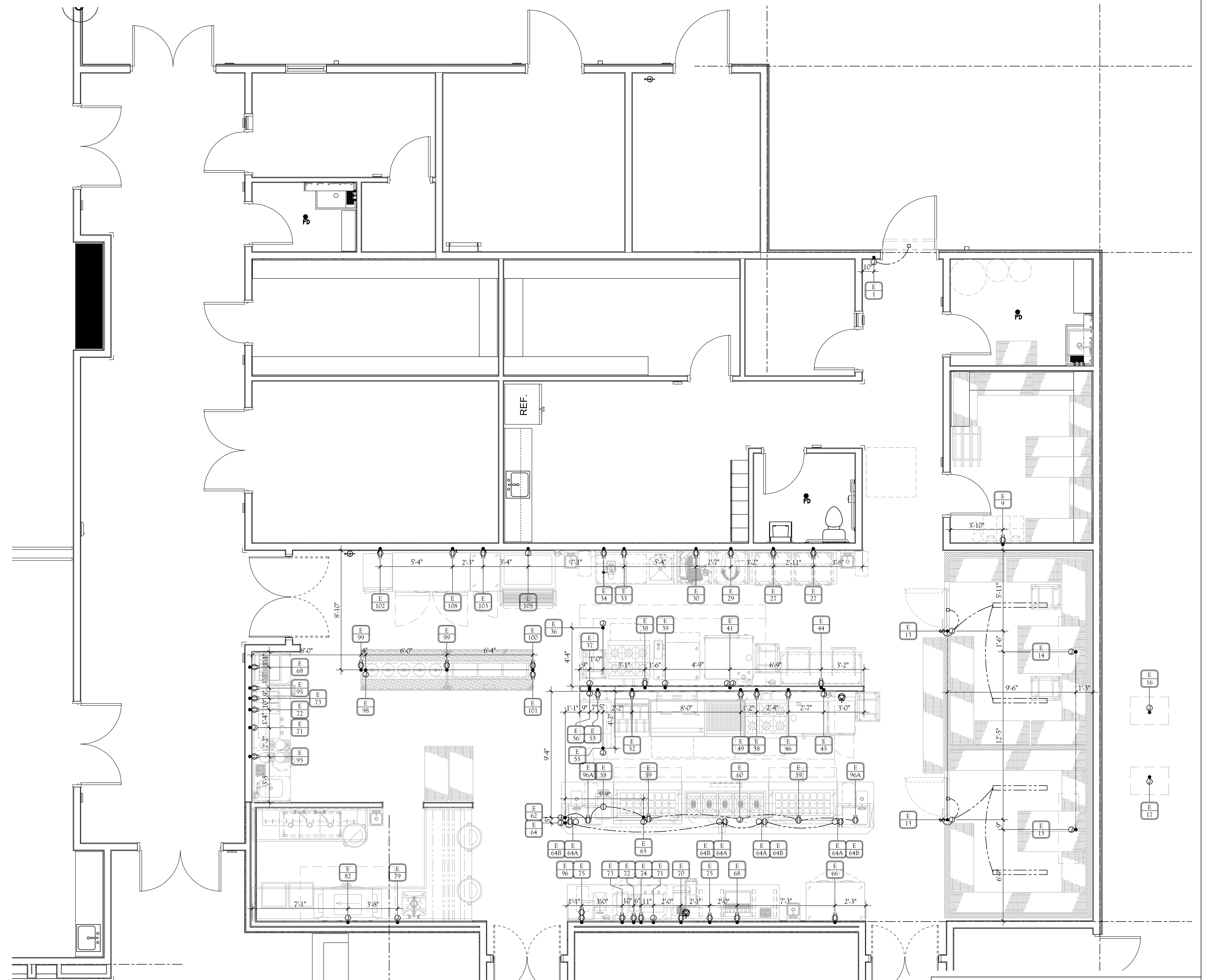

KITCHEN AREA PLAN

SCALE: 1/4" = 1'-0"

ELECTRICAL ROUGH-IN SCHEDULE

TAG	QUA	ELECTRICAL ROUGH-IN	ELEC CONN TYPE	AMP LOAD	SERVICE TO	ELECTRICAL REMARK
E 1	1	120V 1PH JB + 86"	HARD WIRED	2.4A	AIR CURTAIN	CONN THRU MICROSWITCHES
E 9	1	120V 1PH DR + 86"	NEMA 5-15P	15.0A	SODA SYSTEM	4-PLEX RECEPT
E 13	2	120V 1PH JB DN + 108"	HARD WIRED	5.0A	WALK-IN COOLER/FREEZER	
E 14	1	208V 1PH JB DN + 108"	HARD WIRED	1.1A	COOLER EVAP COIL	
E 15	1	208V 1PH JB DN + 108"	HARD WIRED	9.5A	FREEZER EVAP COIL	
E 16	1	208V 3PH JB	HARD WIRED	16.0A	COOLER CONDENSING UNIT	
E 17	1	208V 3PH JB	HARD WIRED	20.6A	FREEZER CONDENSING UNIT	
E 27	2	120V 1PH DR + 48"	NEMA 5-15P	15.0A	WORK TABLE	CONVENIENCE OUTLET
E 29	1	120V 1PH DR + 48"	NEMA 5-15P	8.0A	20 QT. MIXER	
E 30	1	120V 1PH DR + 48"	NEMA 5-15P	5.7A	SLICER	
E 33	1	120V 1PH DR + 48"	NEMA 5-15P	7.0A	FOOD PROCESSOR	
E 34	1	120V 1PH DR + 48"	NEMA 5-15P	5.6A	IMMERSION BLENDER	
E 36	1	120V 1PH JB DN + 108"	HARD WIRED	5.0A	EXHAUST HOOD – TYPE I	
E 37	1	120V 1PH JB + 96"	HARD WIRED	15.0A	FIRE SUPPRESSION SYSTEM	
E 38	2	120V 1PH DR + 16"	NEMA 5-15P	6.0A	6 O.B. RANGE W/ OVEN	
E 39	1	208V 3PH JB + 24"	HARD WIRED	64.0A	BRAISING PAN	
E 41	1	208V 1PH JB + 24"	NEMA 6-15P	2.5A	DOUBLE COMBI-OVENS	
	1	208V 1PH JB + 48"	NEMA 6-15P	2.5A		
E 44	1	120V 1PH DR + 48"	NEMA 5-15P	15.0A	WORK TABLE	CONVENIENCE OUTLET
E 45	1	208V 1PH JB + 72"	HARD WIRED	22.2A	COOK & HOLD	
E 46	1	120V 1PH DR + 48"	NEMA 5-15P	5.0A	COMBI OVEN	
E 49	1	120V 1PH DR + 16"	NEMA 5-15P	10.3A	REFRIGERATED BASE	
E 52	1	120V 1PH DR + 16"	NEMA 5-15P	7.0A	2-FRYERS W/ FILTER SYSTEM	
E 53	1	120V 1PH DR + 16"	NEMA 5-15P	2.6A	WORK TOP FREEZER	
E 55	1	120V 1PH JB DN + 108"	HARD WIRED	5.0A	EXHAUST HOOD – TYPE I	
E 56	1	120V/208V 3PH JB + 96"	HARD WIRED	*	ELECTRICAL CONTROL PACKAGE	COORD. WITH MECH FAN SELECTIONS
E 58	1	208V 1PH SR (FIX. MTD. RECEPT)	NEMA 6-20P	16.0A	CONVEYOR TOASTER	
E 59	2	120V 1PH DR (FIX. MTD. RECEPT)	NEMA 5-15P	5.8A	REFRIGERATED PEREP TABLE	
E 60	1	208V 3PH JB (FIX. MTD RECEPT)	HARD WIRED	7.6A	HOT FOOD WELLS	
E 62	1	120/208V 1PH JB DN + 108"	HARD WIRED	*	EXPO COUNTER	CONN TO FIX. MTD. RECEPTACLES
E 64	1	120V 1PH JB DN + 108"	HARD WIRED	*	P.O.S. PRINTER	
E 64A	4	120V 1PH DR (FIX. MTD. RECEPT)	NEMA 5-15P	5.0A	P.O.S. PRINTER	DC/IG
E 64B	4	EMPTY BOX & CONDUIT FOR COMM CABLE BY E.C.				
E 65	1	120V 1PH JB (AT CEILING)	HARD WIRED	(8)2.0A	HEAT LAMPS	
E 66	1	120V 1PH DR + 86"	NEMA 5-15P	6.9A	REFRIGERATOR	
E 68	2	120V 1PH DR + 12"	NEMA 5-15P	3.5A	SODA DISPENSER	
E 70	1	120V 1PH DR + 48"	NEMA 5-15P	6.0A	JUICE DISPENSER	
E 71	2	120/208V 1PH JB + 48"	HARD WIRED	28.6A	COFFEE BREWER	
E 72	2	120V 1PH DR + 48"	NEMA 5-15P	11.0A	COFFEE GRINDER	
E 73	2	120V 1PH DR + 48"	NEMA 5-15P	14.4A	ICE TEA BREWER	
E 74	1	120V 1PH DR + 16"	NEMA 5-15P	2.5A	U/C REFRIGERATOR	
E 75	2	120V 1PH DR + 48"	NEMA 5-15P	15.0A	BEVERAGE COUNTER	CONVENIENCE OUTLET
E 79	1	208V 1PH JB + 28"	HARD WIRED	12.1A	DISPOSER	CONN THRU CONTROLS
E 82	1	208V 3PH JB + 66"	HARD WIRED	111.0A	DISH MACHINE	
E 95	2	120V 1PH DR + 48"	NEMA 5-15P	15.0A	BEVERAGE COUNTER	CONVENIENCE OUTLET
E 96	1	120V 1PH DR + 66"	NEMA 5-20P	15.0A	MICROWAVE OVENS	
E 96A	2	120V 1PH DR (FIX. MTD. RECEPT)	NEMA 5-20P	15.0A	MICROWAVE OVENS	
E 98	1	120V 1PH JB (AT CEILING)	HARD WIRED	(5)2.0A	HEAT LAMPS	
E 99	2	120V 1PH DR DN + 78"	NEMA 5-20P	15.0A	PLATING TABLE	DROP CORD BY E.C.
E 100	1	120V 1PH DR DN + 78"	NEMA 5-20P	15.0A	HOT PLATING TABLE	DROP CORD BY E.C.
E 101	1	120V 1PH DR DN + 78"	NEMA 5-20P	15.0A	DROP-IN HOT FOOD UNIT	DROP CORD BY E.C.
E 102	1	120V 1PH DR + 24"	NEMA 5-15P	12.6A	MOBILE HOT FOOD CABINET	
E 103	1	120V 1PH DR + 86"	NEMA 5-15P	6.3A	FREEZER	
E 105	1	208V 3PH JB + 84"	HARD WIRED	14.4A	ICE MACHINE	
E 108	1	120V 1PH DR + 86"	NEMA 5-15P	9.4A	2-DOOR ROLL-IN REFRIGERATOR	

ELECTRICAL NOTES

A	ALL ELECTRICAL OUTLETS SHOWN ON THIS PLAN ARE FOR FIXTURES FURNISHED BY THE KITCHEN EQUIPMENT CONTRACTOR OR VENDOR. FOR FURTHER BLDG ELECTRICAL REQUIREMENTS (TELEPHONES, CLOCKS, SIGNS, EXHAUST HOOD SWITCHING, ETC.) SEE OTHER PLANS.
B	ALL DIMENSIONS GIVEN ARE FROM CENTERLINES AND/OR FINISHED WALLS. ELEVATIONS GIVEN ARE FROM FINISHED FLOOR TO CENTERLINE OF OUTLET. ALL ROUGH-INS SHOWN ARE TO BE RUN INSIDE WALLS (EXCEPT STUB-UPS). LOCATION INDICATES POINT OF EXIT FROM WALLS, CEILINGS OR FLOORS. ALL CONVENIENCE OUTLETS ARE TO BE SET HORIZONTALLY. ALL 120 VOLT OUTLETS NOT DESIGNATED WITH SPECIFIC LOADS TO BE RATED AT 20.0 AMPS.
C	ELECTRICIAN TO CONNECT ALL ELECTRICAL EQUIPMENT AND FIXTURES AND DO ANY INTERNAL WIRING REQUIRED IN THE FIXTURES AS REQUIRED BY THE SPECIFICATIONS. ALL ELECTRICAL OUTLET COVER PLATES ARE TO BE STAINLESS STEEL AND ARE TO BE FURNISHED BY THE ELECTRICIAN, AS WELL AS THE RECEPTACLE, UNLESS OTHERWISE SPECIFIED IN THE ITEM SPECIFICATIONS. KITCHEN EQUIPMENT CONTRACTOR TO FURNISH A GALVANIZED JUNCTION BOX IN THE FIXTURE CUTOUT TO RECEIVE THE RECEPTACLE, UNLESS OTHERWISE NOTED. ALL DISCONNECT SWITCHES REQUIRED ARE TO BE FURNISHED AND INSTALLED BY THE ELECTRICIAN AT TIME OF INSTALLATION.
D	ALL WORK TO BE PERFORMED IN FULL ACCORDANCE WITH ALL APPLICABLE CODES RELATING TO HOOK-UP, INSTALLATION & WIRING OF EQUIPMENT. OMISSIONS OR ERRORS ON THE SCHEDULE DO NOT RELIEVE THE ELECTRICIAN FROM COMPLETE FINAL CONNECTION RESPONSIBILITY.
E	REQUIREMENTS SHOWN ARE FOR FOOD SERVICE EQUIPMENT ONLY. SEE ARCHITECTURAL DRAWINGS FOR ADDITIONAL REQUIREMENTS.
F	CONTROL CIRCUIT FROM ELECTRICIAN FURNISHED AND INSTALL SHUNT TRIP BREAKER(S) TO FIRE CONTROL SYSTEM CONTROL MICRO-. SWITCH. SHUNT TRIP BREAKER(S) TO BE UNDER EXHAUST HOOD. IN CASE OF FIRE, ALL POWER TO EQUIPMENT UNDER HOOD WILL BE SHUT OFF. ALL GAS EQUIPMENT LOCATED UNDER HOOD WILL ALSO BE SHUT OFF IN CASE OF FIRE. MUST BE WIRED THAT IN THE EVENT OF POWER FAILURE, FIRE CONTROL SYSTEM WILL NOT BE ACTIVATED AND WHEN POWER IS RESTORED, FIRE SYSTEM WILL NOT DISCHARGE.
G	ELECTRICIAN TO MAKE MINIMUM PENETRATIONS IN VAULT CEILING TO ACCESS LIGHT FIXTURE CONNECTIONS INSIDE WALK-IN VAULTS. CONDUIT TO BE ROUTED ABOVE THE WALK-IN VAULT CEILING.
H	E.C. TO PROVIDE ANY INTERCONNECTIONS BETWEEN KITCHEN FIRE SUPPRESSION SYSTEM AND MAIN BUILDING FIRE SYSTEM AS REQUIRED.
J	ALL HORIZONTAL WIRING ON WALK-IN COOLERS AND FREEZERS TO BE DONE ON EXTERIOR OF WALK-INS. WIRING BY E.C.
K	ALL KITCHEN OUTLETS ARE TO BE GFI RECEPTACLES.

CLARIFICATIONS

1. ROUGH-IN ELECTRICAL PERFORMED BY THE ELECTRICAL CONTRACTOR SHALL INCLUDE ALL MATERIAL, WIRE, SWITCHES, JUNCTION BOXES, CONVENIENCE OUTLETS, DISCONNECTS, HEAT TAPE, STARTERS, CONTACTORS, SHUNT BREAKERS, MICROSWITCHES, RECEPTACLES AND PULL BOXES NOT BUILT INTO THE FOOD SERVICE EQUIPMENT.
2. FINAL CONNECTIONS USUALLY PERFORMED BY THE ELECTRICAL CONTRACTOR SHALL INCLUDE ALL MATERIALS, MOUNTING ALL SWITCHES OR CONTROL PANELS, COOLER/FREEZER LIGHTS AND INTERCONNECTING WIRING BETWEEN SWITCHES, PANELS, LIGHTS, SOLENOID VALVES, COMPRESSORS, CONDENSERS, EVAPORATORS, DOOR HEATERS, HEATED VENTS, DEFROST HEATERS, HEAT TAPE AND DISCONNECTS AS REQUIRED.
3. SEE HOOD DRAWINGS FOR ELECTRICAL SPECIFICATIONS REQUIRED FOR EXHAUST HOODS, FAN PACKAGE AND FIRE SUPPRESSION SYSTEM.
4. ALL ELECTRICAL RECEPTACLES IN FOOD SERVICE AREA TO BE MOUNTED HORIZONTALLY.

ELECTRICAL LEGEND

SYMBOLS		ABBREVIATIONS	
Ⓙ	JUNCTION BOX (J-BOX)	A	AMPERES
●	ELECTRICAL ROUGH-IN	V	VOLTS
◉	STUB-UP	W	WATTS
■	DROP CORD	PH	PHASE
□	EQUIPMENT CONNECTION	AFF	ABOVE FINISHED FLOOR
F	FLUORESCENT LIGHT FIXTURE	DN	DOWN FROM ABOVE
	INCANDESCENT LIGHT INDICATION	BTC	BRANCH TO CONNECTION POINT AND CONNECT EQUIPMENT
	BREAKER PANELBOARD		
$	SWITCH AS NOTED	HP	HORSE POWER
	FLOOR BOX (FL. BOX)	KW	KILOWATTS
▷	TELEPHONE OUTLET	DC	DIRECT CONNECTION
	FOURPLEX CONVENIENCE OUTLET (FCO)	K.E.C.	KITCHEN EQUIPMENT CONTRACTOR
	DUPLEX CONVENIENCE OUTLET (DCO)	E.C.	ELECTRICAL CONTRACTOR
	SINGLE CONVENIENCE OUTLET (SCO)		

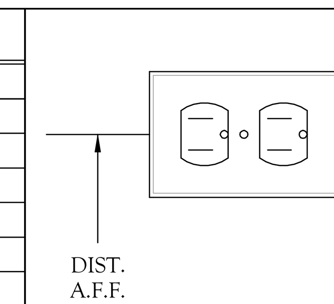

FOOD SERVICE RECEPTACLE

MOUNT RECEPTACLES HORIZONTALLY IN FOOD SERVICE AREAS

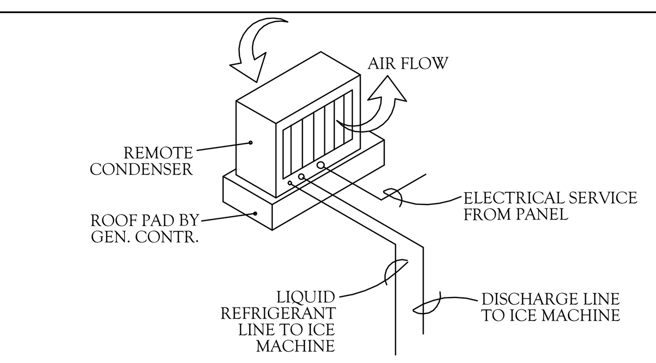

- / FS-3.0 TYPICAL REMOTE CONDENSING UNIT DETAIL

NOT TO SCALE

STAMP

DYRON MURPHY ARCHITECTS, P.C.

4505 Montbel Place NE, Albuquerque, New Mexico 87107

SHIPROCK PINNACLE HOTEL & RESTAURANT

SHIPROCK, NEW MEXICO

100% CONSTRUCTION DOCUMENTS

ISSUED FOR CONSTRUCTION

NOVEMBER 3, 2023

PROJECT NUMBER	DRAWN BY	PROJ MGR
2022.10	SK/DK	SK

Sheet Title

EQUIPMENT ELECTRICAL ROUGH-IN PLAN

Sheet Number of

Q201

5/3/2023 1:23:21 PM C:\Revit Locals\Shiprock Pinnacle_Restaurant_rirvinT8K3N.rvt
DYRON MURPHY ARCHITECTS, P.C.

WATER ROUGH-IN SCHEDULE

TAG	QUA	WATER ROUGH-IN	WATER CONN	SERVICE TO	WATER REMARKS
P 4	1	1/2" HW & CW + 28"	1/2" HW & CW	SERVICE FAUCET	
P 9	1	1/2" CW + 16"	1/2" CW	SODA SYSTEM	BACKFLOW DEVICE BY P.C.
P 24	4	1/2" HW & CW + 16"	1/2" HW & CW	HAND SINK	
P 31	1	1/2" HW & CW + 16"	1/2" HW & CW	PREP TABLE W/ SINK	
P 39	1	3/4" CW + 16"	3/4" CW	BRAISING PAN	
P 41	1	(2) 3/4" CW (USE P42)	(2)3/4" CW	DOUBLE COMBI-OVENS	
P 42	1	3/4" CW + 75"	3/4" CW	WATER FILTER - COMBI OVEN	
P 46	1	3/4" CW (USE P47)	3/4" CW	COMBI OVEN	
P 47	1	3/4" CW + 75"	3/4" CW	WATER FILTER - COMBI OVEN	
P 62	2	1/2" HW & CW DN + 108"	1/2" HW & CW	EXPO COUNTER	
P 67	1	1/2" CW + 28"	3/8" CW	GLASS FILLER	
P 70	1	1/2" CW + 50"	1/4" CW	JUICE DISPENSER	
P 71	2	1/2" CW + 50"	3/8" CW	COFFEE BREWER	
P 73	2	1/2" CW + 50"	3/8" CW	ICE TEA BREWER	
P 75	1	1/2" HW & CW + 16"	1/2" HW & CW	BEVERAGE COUNTER	CONN CW THROUGH P91
P 79	1	1/2" CW	1/2"CW	DISPOSER	
P 80	1	1/2" HW & CW + 16"	1/2" HW & CW	PRE-RINSE FAUCET	
P 82	1	1/2" HW & CW + 16"	1/2" HW & CW	DISH MACHINE	
P 87	2	1/2" HW & CW + 16"	1/2" HW & CW	THREE COMPARTMENT SINK	
P 91	2	1/2" CW + 28"	1/2" CW	WATER FILTER	
P 95	1	1/2" HW & CW + 16"	1/2" HW & CW	BEVERAGE COUNTER	CONN CW LINE THROUGH P90 FILTER
P 105	1	1/2" CW (USE P107)	1/2" CW	ICE MACHINE	CONN THRU FILTER
P 107	1	1/2" CW + 72"	1/2" CW	WATER FILTER	

WASTE ROUGH-IN SCHEDULE

TAG	QUA	WASTE ROUGH-IN	WASTE CONNECTION	SERVICE TO	WASTE REMARKS
W 5	1	3" W (IN FLOOR)	3" W	MOP SINK	
W 9	1	FLOOR SINK	1/2" I.W.	SODA SYSTEM	FOR BACKFLOW DEVICE BY P.C.
W 14	1	FLOOR SINK	1" I.W.	COOLER EVAP COIL	
W 15	1	FLOOR SINK	1" I.W.	FREEZER EVAP COIL	
W 24	4	1-1/2" W + 14"	1-1/2" W	HAND SINK	
W 31	1	FLOOR SINK	2" I.W.	PREP TABLE W/ SINK	
W 39	1	FLOOR SINK	2" I.W.	BRAISING PAN	
W 41	1	FLOOR SINK	1-1/2" I.W.	DOUBLE COMBI-OVENS	
W 46	1	FLOOR SINK	2" I.W.	COMBI OVEN	
W 62	2	FLOOR SINK	2" I.W.	EXPO COUNTER	
W 67	1	FLOOR SINK	1" I.W.	GLASS FILLER	
W 68	2	FLOOR SINK	1" I.W.	SODA DISPENSER	
W 75	1	FLOOR SINK	1-1/2" I.W.	BEVERAGE COUNTER	
W 79	1	2" W + 10"	2" W	DISPOSER	
W 82	1	FLOOR SINK	1-1/2" I.W.	DISH MACHINE	
W 87	1	FLOOR SINK	(3) 2" I.W.	THREE COMPARTMENT SINK	MANIFOLD DRAINS
W 95	1	FLOOR SINK	1-1/2" I.W.	BEVERAGE COUNTER	
W 104	1	3" W (IN FLOOR)	3" W	FLOOR TROUGH	
W 105	1	FLOOR SINK	3/4" I.W.	ICE MACHINE	
W 106	1	FLOOR SINK	3/4" I.W.	ICE MACHINE BIN	

GAS ROUGH-IN SCHEDULE

TAG	QUA	GAS ROUGH-IN	GAS LOAD	SERVICE TO	GAS REMARKS
G 38	2	3/4" G +30"	222 MBTU	6 O.B. RANGE W/ OVEN	w/ Q.D. HOSE & RESTRAINING DEVICE
G 41	1	3/4" G + 12"	107 MBTU (EA)	DOUBLE COMBI-OVENS	w/ Q.D. HOSES
G 46	1	3/4" G + 36"3/4" G + 36"	50 MBTU	COMBI OVEN	w/ Q.D. HOSE & RESTRAINING DEVICE
G 48	1	3/4" G + 30"	90 MBTU	CHAR BROILER	w/ Q.D. HOSE & RESTRAINING DEVICE
G 50	1	3/4" G + 75"	40 MBTU	SALAMANDER BROILER	
G 51	1	3/4" G + 30"	120 MBTU	GRIDDLE	w/ Q.D. HOSE & RESTRAINING DEVICE
G 52	1	1" G + 12"	244 MBTU	2-FRYERS W/ FILTER SYSTEM	w/ Q.D. HOSE & RESTRAINING DEVICE

KITCHEN AREA PLAN

SCALE: 1/4" = 1'-0"

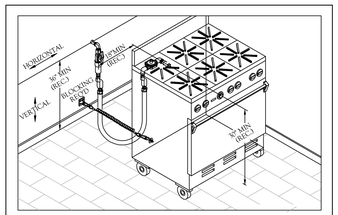

1 DISCONNECT GAS HOSE DETAIL

FS4.0 NOT TO SCALE

CLARIFICATIONS

A	PLUMBER TO SPECIFY AND LOCATE EQUIPMENT AND UTILITIES FOR MOP SINKS. (SINKS FURNISHED BY PLUMBER).
B	ROUGH-IN PLUMBING PERFORMED BY THE PLUMBING CONTRACTOR SHALL INCLUDE ALL MATERIAL, PIPES, VALVES, FITTINGS, UNDERGROUND TRAPS, FLOOR SINKS, FLOOR DRAINS, VENTS, FLOOR DRAIN AND FLOOR SINK COVERS AND STOPS AT THE ENDS OF WATER AND STEAM LINES.
C	FINAL CONNECTIONS USUALLY PERFORMED BY THE PLUMBING CONTRACTOR SHALL INCLUDE ALL MATERIALS, PIPING, VALVES, FITTINGS, TRAPS, EXTENDED WASTES AND WHATEVER IS NECESSARY TO PROPERLY CONNECT THE EQUIPMENT ITEM TO THE ROUGH-IN OUTLET. THIS INCLUDES STOPS ON ALL WATER LINES, CLEANOUTS ON ALL DIRECT CONNECTED DRAIN LINES AND HARD COPPER DRAINS TO FLOOR SINKS FROM EQUIPMENT.
D	ALL WORK TO BE PERFORMED IN FULL ACCORDANCE WITH THE APPLICABLE CODES RELATING TO INSTALLATION AND HOOK-UP OF EQUIPMENT. OMISSIONS OR ERRORS ON THE SCHEDULE DO NOT RELIEVE THE PLUMBING CONTRACTOR FROM COMPLETE FINAL PLUMBING RESPONSIBILITY.
E	ALL CONNECTIONS SHOWN RELATE TO KITCHEN EQUIPMENT ONLY. REFER TO ARCHITECTURAL/ENGINEERING PLANS FOR ADDITIONAL REQUIREMENTS.
F	ALL DIMENSIONS GIVEN ARE FROM COLUMN CENTERLINES AND/OR FINISHED WALLS AND ARE IN INCHES TO 4'-0". ELEVATIONS GIVEN ARE FROM FINISHED FLOORS. ALL ROUGH-INS SHOWN ARE TO BE RUN INSIDE WALLS (EXCEPT STUB-UPS) LOCATIONS INDICATE POINT OF EXIT FROM WALLS, CEILINGS OR FLOORS.
G	ALL FLOOR DRAINS TO SET 1/2" BELOW FINISHED FLOOR UNLESS OTHERWISE NOTED. DO NOT SLOPE FLOORS SO CLOSE TO DRAINS AS TO CREATE "PITS" OR "DIPS" IN FLOOR. MINIMUM RADIUS OF SLOPE TO BE 24" FROM CENTERLINE OF DRAIN.
H	MECHANICAL GAS VALVE FURNISHED WITH FIRE SUPPRESSION AND IS TO BE INSTALLED BY THE PLUMBING CONTRACTOR

NOTE:

IT IS THE INTENTION OF THIS PLAN TO SHOW UTILITY REQUIREMENTS AND CONNECTION POINTS. DO NOT USE FOR ROUGHINGIN LOCATIONS. FOR ACTUAL ROUGHING-IN LOCATIONS REFER TO THE SHOP DRAWINGS PROVIDED BY THE KITCHEN EQUIPMENT CONTRACTOR.

INDIRECT WASTE LINES REQUIRED FOR STANDARD AND/OR FABRICATED ITEMS OF KITCHEN EQUIPMENT SHALL BE FURNISHED AND INSTALLED BY THE KITCHEN EQUIPMENT CONTRACTOR, EXCEPT FOR SINKS.

WATER INLET FITTINGS AND VALVE FOR THE SOILED DISHTABLE TROUGHS SHALL BE FURNISHED AND INSTALLED BY THE KITCHEN EQUIPMENT CONTRACTOR. PLUMBING CONTRACTOR SHALL PROVIDE COLD WATER SERVICE, ALL INTERCONNECTING PIPING, VACUUM BREAKERS AND MAKE FINAL CONNECTIONS.

THE KITCHEN EQUIPMENT CONTRACTOR TO PROVIDE ALL EQUIPMENT TRIM, INCLUDING FAUCETS, SINK WASTES AND SWING FAUCETS AT KETTLES AND RANGES, ALL TO BE INSTALLED BY THE PLUMBING CONTRACTOR.

ALL HORIZONTAL PIPING LINES CONNECTED AND EXTENDED FROM EQUIPMENT SHALL BE RUN AT THE HIGHEST POSSIBLE ELEVATION AND NOT LESS THAN 6" ABOVE THE FINISHED FLOOR TO PROVIDE AMPLE CLEARANCE FOR CLEANING. AT WALL OR COLUMN LOCATIONS, PIPING ROUGH-INS SHOULD BE STUBBED UP IN WALLS WHEREVER POSSIBLE.

ALL PLUMBING LINES SHALL BE FURNISHED AND INSTALLED WITH COPPER PIPING. NO SOFT PLATIC, PVC OR ALTERNATE MATERIAL WILL BE APPROVED OR ALLOWED, EXCEPT AS REQUIRED BY LOCAL CODES.

PLUMBER SHALL INSTALL AUTOMATIC SHUT-OFF VALVE FOR FUEL GAS. VALVE SHALL BE SOLENOID TYPE WIRED TO FIRE EXTINGUISHER

PLUMBING LEGEND

SYMBOLS		ABBREVIATIONS	
	HOT/COLD WATER	HW	HOT WATER
	STUB-UP WATER	CW	COLD WATER
	DRAIN	DR	DRAIN
	CONNECTION	AFF	ABOVE FINISHED FLOOR
	FLOOR DRAIN AS NOTED	FD	FLOOR DRAIN
	FLOOR SINK 18" X 18"	FS	FLOOR SINK
	FLOOR SINK HALF GRATE	FT	FLOOR TROUGH
	GAS LINE	HD	HUB DRAIN
	GAS CONNECTION	GPH	GALLONS PER HOUR
	FLEX CONNECT HOSE	GPM	GALLONS PER MINUTE
	INDIRECT WASTE LINE	BTC	BRANCH TO CONNECT
	PLUMBING INTERCONNECTION	PSI	POUNDS PER SQUARE INCH
	STEAM SUPPLY	DFA	DOWN FROM ABOVE
	STEAM RETURN	SS	STEAM SUPPLY
	STEAM CONNECTION	SR	STEAM RETURN

PLUMBING GENERAL NOTES

1. SEE EQUIPMENT PLAN AND SCHEDULE OF EQUIPMENT FOR ADDITIONAL INFORMATION.
2. P.C. TO PROVIDE ALL ROUGH-IN AND FINAL CONNECTIONS TO ALL EQUIPMENT SHOWN HEREIN.
3. SOLID DOT REPRESENTS ROUGH-IN LOCATION. (FURNISHED BY P.C.)
   DOTTED LINE REPRESENTS FINAL CONNECTION. (FURNISHED BY P.C.)
   CIRCLE REPRESENTS CONNECTION TO EQUIPMENT. (FURNISHED BY P.C.)
4. PLUMBING CONTRACTOR (P.C.) TO KEEP ALL PLUMBING LINES CLEAR OF WALLBACKING AREAS.
5. P.C. TO PROVIDE AND INSTALL REGULATORS AS REQUIRED.

REFER TO SPECIAL CONDITIONS PLAN SHEET FOR FLOOR SINK, FLOOR TROUGH & SLAB PENETRATION DIMENSIONS

NOTE: ALL GAS EQUIPMENT ON LEGS OR CASTERS SHALL HAVE RESTRAINT CABLES & QUICK DISCONNECT HOSES

STAMP

DYRON MURPHY ARCHITECTS, P.C.

4505 Montbel Place NE, Albuquerque, New Mexico 87107

SHIPROCK PINNACLE HOTEL & RESTAURANT

SHIPROCK, NEW MEXICO

100% CONSTRUCTION DOCUMENTS

ISSUED FOR CONSTRUCTION

NOVEMBER 3, 2023

PROJECT NUMBER	DRAWN BY	PROJ MGR
2022.10	SK/DK	SK

Sheet Title

EQUIPMENT PLUMBING ROUGH-IN PLAN

Sheet Number

Q301

of

5/3/2023 12:23 PM C:\Revit Local\Shiprock Pinnacle_Restaurant_revitTRIGN.rvt

DYRON MURPHY ARCHITECTS, P.C.

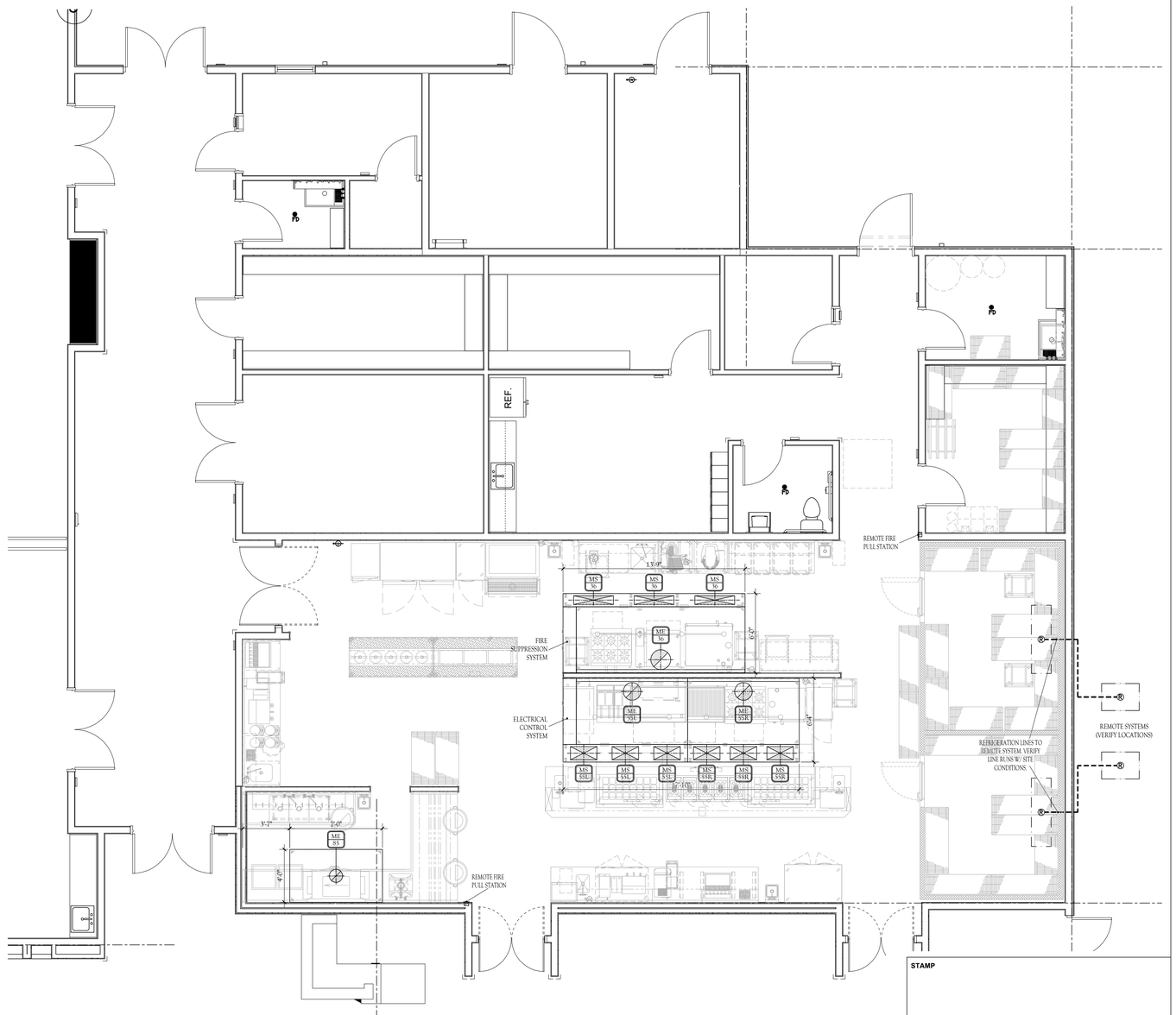

KITCHEN AREA PLAN

SCALE: 1/4" = 1'-0"

MECHANICAL SYSTEM NOTES:

1. EXHAUST HOOD REQUIREMENTS AND DUCT COLLAR SIZES SHALL BE COORDINATED WITH FINAL SHOP DRAWINGS PRIOR TO FABRICATION.
2. ALL FINAL DUCT WELDING AND CONNECTIONS TO BE INCLUDED IN THE GC CONTRACT.
3. DUCTWORK, EXHAUST AND MUA FANS TO BE PROVIDED AND INSTALLED BY THE GC'S MECHANICAL CONTRACTOR.
4. PROVIDE DISCONNECT ON ROOF FOR EXHAUST AND M.U.A. FANS.
5. ELECTRICAL EQUIPMENT UNDER EXHAUST HOOD MUST HAVE SHUNT TRIP BREAKERS AT ELECTRICAL PANEL CONNECTED TO MICROSWITCHES IN THE FIRE SYSTEM.
6. K.E.C. IS TO PROVIDE CLOSURE TRIM PANELS FROM TOP OF HOOD TO CEILING & S/S WALL PANELS

NOTE:
REFER TO ENGINEERING HOOD DATA SHEETS FOR COMPLETE CFM REQUIREMENTS.

NOTE:
1. REFRIGERATION LINES ARE FOR SCHEMATIC PURPOSES ONLY.
2. K.E.C. AND G.C. TO VERIFY EXACT LOCATION OF REFRIGERATION UNITS ON ROOF WITH ARCHITECT PRIOR TO INSTALLATION.

MECHANICAL ROUGH-IN SCHEDULE

ITEM	QUA	TAG	HOOD SIZE			AIR FLOW REQUIREMENTS					HOOD WEIGHT (LBS.)
			L	W	H	EXHAUST C.F.M.	SUPPLY C.F.M.	EXHAUST SIZE	SUPPLY SIZE	TOTAL HOOD INCHES W.C.	
36	1	ME36	153"	60"	30"	2550		18"DIA		-0.687"	847
36	3	MS36	165"	12"	6"		680EA)		36"" x 8"	0.176"	-
55	1	ME55L	101"	60"	30"	2250		16"DIA		-0.824"	698
55	3	MS55L	113"	16"	6"		600(EA)		24" x 12"	0.162	-
55	1	ME55R	101"	60"	30"	2250		16"DIA		-0.824"	534
55	3	MS55R	101"	16"	6"		596(EA)		24" x 12"	0.160"	-
85	1	ME85	96"	48"	30"	1050		12"DIA		-0.129"	260

SYMBOLS

REFRIGERATION LINES (BY KITCHEN EQUIPMENT CONTRACTOR)

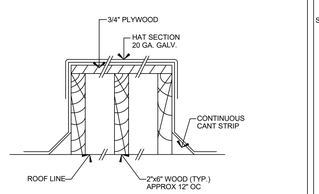

1 REFRIGERATION PAD DETAIL
VERIFY EXACT LOCATIONS WITH ARCHITECT

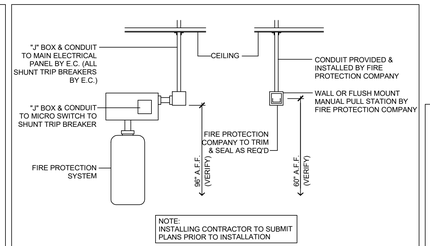

NOTE:
INSTALLING CONTRACTOR TO SUBMIT PLANS PRIOR TO INSTALLATION

2 TYPICAL FIRE PROTECTION SYSTEM
NOT TO SCALE

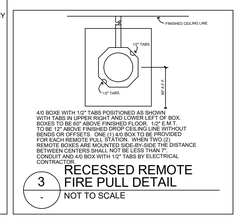

4/0 BOXE WITH 1/2" TABS POSITIONED AS SHOWN WITH TABS IN UPPER RIGHT AND LOWER LEFT OF BOX. BOXES TO BE 60" ABOVE FINISHED FLOOR. 1/2" E.M.T. TO BE USED FOR ALL CONDUIT RUNS. NO MORE THAN FOUR BENDS OR OFFSETS. ONE (1) 4/0 BOX TO BE PROVIDED FOR EACH REMOTE PULL STATION. WHEN TWO (2) REMOTE BOXES ARE MOUNTED SIDE-BY-SIDE THE DISTANCE BETWEEN CENTERS SHALL NOT BE LESS THAN 7". PROVIDE AND 4/0 BOX WITH 1/2" TABS BY ELECTRICAL CONTRACTOR.

3 RECESSED REMOTE FIRE PULL DETAIL
NOT TO SCALE

STAMP

DYRON MURPHY ARCHITECTS, P.C.

4505 Montbel Place NE, Albuquerque, New Mexico 87107

SHIPROCK PINNACLE HOTEL & RESTAURANT

SHIPROCK, NEW MEXICO

100% CONSTRUCTION DOCUMENTS

ISSUED FOR CONSTRUCTION

NOVEMBER 3, 2023

PROJECT NUMBER	DRAWN BY	PROJ MGR
2022.10	SK/DK	SK

EQUIPMENT MECHANICAL PLAN

Sheet Title

Sheet Number

Q401

of

5/3/2023 1:23:21 PM C:\Revit Local\Shiprock Pinnacle_Restaurant_mvsTRIZON.rvt
DYRON MURPHY ARCHITECTS, P.C.

HOOD INFORMATION – JOB#6067318

HOOD NO	TAG	MODEL	MANUFACTURER	LENGTH	MAX COOKING TEMP	TYPE	APPLIANCE DUTY	DESIGN CFM/FT	TOTAL EXH CFM	EXHAUST PLENUM WIDTH	EXHAUST PLENUM LENG	RISER(S) HEIGHT	RISER(S) DIA	RISER(S) CFM	RISER(S) VEL	RISER(S) SP	TOTAL SUPPLY CFM	HOOD CONSTRUCTION	HOOD CONFIG END TO END	HOOD CONFIG ROW
1	36	6030 ND-2-PSP-F	CAPTIVEAIRE	12' 9"	600 DEG	I	HEAVY	200	2550			4"	18"	2550	1443	-0.687"	2040	430 SS WHERE EXPOSED	ALONE	ALONE
2	55 (Left)	6030 ND-2-PSP-F	CAPTIVEAIRE	8' 5"	600 DEG	I	HEAVY	267	2250			4"	16"	2250	1611	-0.824"	1800	430 SS WHERE EXPOSED	LEFT	ALONE
3	55 (Right)	6030 ND-2-PSP-F	CAPTIVEAIRE	8' 5"	600 DEG	I	HEAVY	267	2250			4"	16"	2250	1611	-0.824"	1790	430 SS WHERE EXPOSED	RIGHT	ALONE
4	85	4830 VHB-G	CAPTIVEAIRE	7' 0"	700 DEG	II	N/A	150	1050			4"	12"	1050	1337	-0.129"	0	430 SS 100%	ALONE	ALONE

HOOD INFORMATION

HOOD NO	TAG	FILTER(S) TYPE	FILTER(S) QTY	FILTER(S) HEIGHT	FILTER(S) LENGTH	FILTER(S) EFFICIENCY @ 7 MICRONS	LIGHT(S) QTY	LIGHT(S) TYPE	LIGHT(S) WIRE GUARD	UTILITY CABINET(S) LOCATION	UTILITY CABINET(S) SIZE	FIRE SYSTEM TYPE	FIRE SYSTEM SIZE	ELECTRICAL MODEL #	SWITCHES QUANTITY	FIRE SYSTEM PIPING	HOOD HANGING WEIGHT
1	36	CAPTRATE SOLO FILTER	9	20"	16"	85% SEE FILTER SPEC	4	L55 SERIES E26	NO	RIGHT	12"x60"x30"					NO	847 LBS
2	55 (Left)	CAPTRATE SOLO FILTER	6	20"	16"	85% SEE FILTER SPEC	3	L55 SERIES E26	NO	LEFT	12"x60"x30"			DCV-3111	1 LIGHT 1 FAN	NO	698 LBS
3	55 (Right)	CAPTRATE SOLO FILTER	6	20"	16"	85% SEE FILTER SPEC	3	L55 SERIES E26	NO							NO	534 LBS
4	85						0									NO	260 LBS

HOOD OPTIONS

HOOD NO	TAG	OPTION
1	36	FIELD WRAPPER 18.00" HIGH FRONT, LEFT, RIGHT.
		BACKSPLASH 128.00" HIGH X 183.00" LONG 430 SS VERTICAL.
		RIGHT QUARTER END PANEL 23" TOP WIDTH, 0" BOTTOM WIDTH, 23" HIGH 430 SS.
		LEFT QUARTER END PANEL 23" TOP WIDTH, 0" BOTTOM WIDTH, 23" HIGH 430 SS.
		STRUCTURAL FRONT PANEL.
2	55 (Left)	FIELD WRAPPER 18.00" HIGH FRONT, LEFT.
		BACKSPLASH 128.00" HIGH X 232.00" LONG 430 SS VERTICAL.
		LEFT QUARTER END PANEL 23" TOP WIDTH, 0" BOTTOM WIDTH, 23" HIGH 430 SS.
3	55 (Right)	FIELD WRAPPER 18.00" HIGH FRONT.
		RIGHT QUARTER END PANEL 23" TOP WIDTH, 0" BOTTOM WIDTH, 23" HIGH 430 SS.
4	85	FIELD WRAPPER 18.00" HIGH FRONT, LEFT, RIGHT.
		BACKSPLASH 80.00" HIGH X 84.00" LONG 430 SS VERTICAL.

PERFORATED SUPPLY PLENUM(S)

HOOD NO	TAG	POS	LENGTH	WIDTH	HEIGHT	TYPE	RISER(S) WIDTH	RISER(S) LENG	RISER(S) DIA	RISER(S) CFM	RISER(S) SP
1	36	Front	165"	12"	6"	MUA	8"	36"		680	0.176"
						MUA	8"	36"		680	0.176"
						MUA	8"	36"		680	0.176"
2	55 (Left)	Front	113"	16"	6"	MUA	12"	24"		600	0.162"
						MUA	12"	24"		600	0.162"
						MUA	12"	24"		600	0.162"
3	55 (Right)	Front	101"	16"	6"	MUA	12"	24"		596	0.160"
						MUA	12"	24"		596	0.160"
						MUA	12"	24"		596	0.160"

FOR QUESTIONS, CALL THE
Arizona Office
REGION 93
PHONE: (480) 926-6810
EMAIL: reg93@captiveaire.com

PATENT NUMBERS

AC-PSP (UNITED STATES) - US PATENT 7963830 B2.
AC-PSP WALL (CANADA) - CA PATENT 2820509.
AC-PSP ISLAND (CANADA) - CA PATENT 2520330.

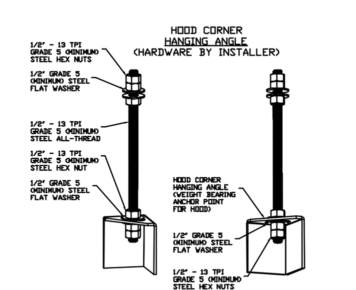

ASSEMBLY INSTRUCTIONS

HANGING ANGLE MUST BE SUPPORTED WITH 1/2" - 13 TPI GRADE 5 (MINIMUM) ALL-THREAD. SANDWICH HANGING ANGLES AND CEILING ANCHOR POINTS WITH 1/2" GRADE 5 (MINIMUM) STEEL FLAT WASHERS AND 1/2" - 13 TPI GRADE 5 (MINIMUM) HEX NUTS AS SHOWN. MUST USE DOUBLED HEX NUT CONFIGURATION BENEATH HOOD HANGING ANGLES AND ABOVE CEILING ANCHORS. MAINTAIN 1/4" OF EXPOSED THREADS BENEATH BOTTOM HEX NUT. TORQUE ALL HEX NUTS TO 57 FT-LBS.

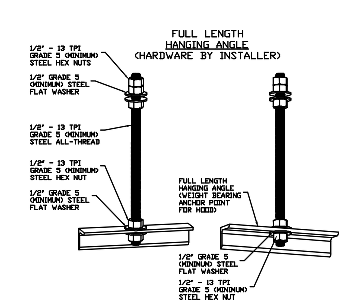

ASSEMBLY INSTRUCTIONS

HANGING ANGLE MUST BE SUPPORTED WITH 1/2" - 13 TPI GRADE 5 (MINIMUM) ALL-THREAD. SANDWICH HANGING ANGLES AND CEILING ANCHOR POINTS WITH 1/2" GRADE 5 (MINIMUM) STEEL FLAT WASHERS AND 1/2" - 13 TPI GRADE 5 (MINIMUM) HEX NUTS AS SHOWN. MUST USE DOUBLED HEX NUT CONFIGURATION ABOVE CEILING ANCHORS. SINGLE HEX NUT BENEATH HANGING ANGLE IS ACCEPTABLE FOR FULL LENGTH HANGING ANGLES. MAINTAIN 1/4" OF EXPOSED THREADS BENEATH BOTTOM HEX NUT. TORQUE ALL HEX NUTS TO 57 FT-LBS.

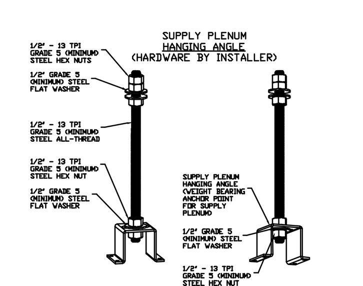

ASSEMBLY INSTRUCTIONS

HANGING ANGLE MUST BE SUPPORTED WITH 1/2" - 13 TPI GRADE 5 (MINIMUM) ALL-THREAD. SANDWICH HANGING ANGLES AND CEILING ANCHOR POINTS WITH 1/2" GRADE 5 (MINIMUM) STEEL FLAT WASHERS AND 1/2" - 13 TPI GRADE 5 (MINIMUM) HEX NUTS AS SHOWN. MUST USE DOUBLED HEX NUT CONFIGURATION ABOVE CEILING ANCHORS. SINGLE HEX NUT BENEATH HANGING ANGLE IS ACCEPTABLE FOR PSP HANGING ANGLES. MAINTAIN 1/4" OF EXPOSED THREADS BENEATH BOTTOM HEX NUT. TORQUE ALL HEX NUTS TO 57 FT-LBS.

CAPTIVEAIRE SYSTEMS RECOMMENDS THE USE OF LISTED, PRE-FABRICATED ROUND GREASE EXHAUST DUCT TO REDUCE STATIC PRESSURE IN THE SYSTEM, MINIMIZE INSTALLATION AND INSPECTION TIMES, AND ENSURE DUCT IS LIQUID TIGHT

HVAC DISTRIBUTION NOTE

IT IS RECOMMENDED NOT TO INSTALL HIGH VELOCITY DIFFUSERS OR HVAC RETURNS WITHIN TEN (10) FEET OF THE EXHAUST HOOD. PERFORATED DIFFUSERS ARE RECOMMENDED.

VERIFY CEILING HEIGHT

___' - ___"

HEIGHT REQUIRED TO VERIFY THAT HOOD FITS SPACE AND TO SIZE THE ENCLOSURE PANELS

CUSTOMER APPROVAL TO MANUFACTURE:

Approved as Noted ☐
Approved with NO Exception Taken ☐
Revise and Resubmit ☐
SIGNATURE __________
Your Title __________ Date __________

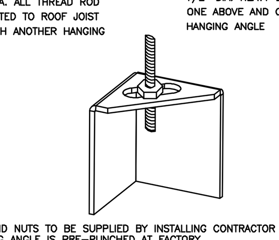

*ROD AND NUTS TO BE SUPPLIED BY INSTALLING CONTRACTOR
HANGING ANGLE IS PRE-PUNCHED AT FACTORY

ND-2 HANGING ANGLE DETAIL

HOOD STYLE	DIM FROM REAR	DIM FROM FRONT (24"H)	DIM FROM FRONT (30"H)
CANOPY ND2	4.166"	2.246"	2.246"
ND2-PSP-F	4.166"	2.246"	2.246"
BACKSHELF 2847BD	2.00"	14.25"	–
VHB/VHB-G	36"X36"	42"X42"	48"X48"
FRONT/BACK DIMS BY SIZE	2.246"	2.246"	2.246"

HANGING ANGLE LOCATIONS

EXHAUST CFM=LENGTH OF HOOD X CFM/LIN.FT. (LOAD)
SUPPLY CFM=EXHAUST CFM X PERCENTAGE REQUIRED

$$\text{TOTAL DUCT AREA} = 144 \times \frac{\text{CFM}}{\text{FPM}(*)}$$

$$\text{DUCT LENGTH} = \frac{\text{TOTAL DUCT AREA}}{\text{DUCT DEPTH}}$$

*CAPTIVE-AIRE VENTILATOR DUCT SIZES ARE CALCULATED USING AN EXHAUST VELOCITY OF 1500-1800 FPM AND A SUPPLY VELOCITY OF 1000 FPM.

CALCULATIONS UTILIZED

CAPTIVE-AIRE HOODS ARE BUILT IN COMPLIANCE WITH:

LISTED #3054804-001 & #3054804-002 — STANDARD 710 — Intertek — BUILT IN ACCORDANCE WITH NFPA No. 96

Listed under ETL File number 3054804-001/002

BUILDING CODES

CAPTIVE-AIRE HOODS HAVE OPTIONAL CLEARANCE REDUCTION SYSTEMS AVAILABLE AS FOLLOWS:

MATERIAL	CLEARANCE REDUCTION SYSTEM
NON-COMBUSTIBLE	NONE REQUIRED
LIMITED-COMBUSTIBLE	3" UNINSULATED STANDOFF
COMBUSTIBLE	1" INSULATED STANDOFF

CLEARANCE TO COMBUSTIBLES

INSTALLATION

1. ALL ELECTRICAL "FIELD" CONNECTIONS AND RELATED INTERCONNECTIONS BY ELECTRICAL CONTRACTORS.
2. ALL PLUMBING "FIELD" CONNECTIONS AND RELATED INTERCONNECTIONS BY PLUMBING CONTRACTORS.
3. HANGING BRACKETS LOCATED AND WELDED AS SHOWN ON PLANS. ALL OTHER HANGER MATERIALS PROVIDED BY INSTALLING CONTRACTORS.
4. ALL CONNECTIONS FROM CAPTIVE-AIRE DUCT PER MECHANICAL CONTRACTORS'S PLANS.
5. COOKING EQUIPMENT TO SHUTOFF IN EVENT OF FIRE.
6. EXHAUST FANS TO TURN ON IN EVENT OF FIRE.
7. ALL LIGHTS FIXTURE SHOWN INSTALLED BY CAPTIVE-AIRE ARE FACTORY PREWIRED. INTERCONNECTIONS BETWEEN HOODS AND TO SWITCHES BY ELECTRICAL CONTRACTORS.
8. LAMPS FOR LIGHT FIXTURES BY INSTALLING CONTRACTORS.
9. SEISMIC RESTAINTS ARE RESPONSIBILITY OF INSTALLING CONTRACTOR.
10. INSTALLING CONTRACTORS ASSUME ALL RELATED REPONSIBILITY FOR VERIFICATION OF DIMENSIONAL DATA CONTAINED ON THESE DOCUMENTS FOR ACCURACY, INTEGRATION, AND ADMINISTRATION OF CODE REQUIREMENTS IN EFFECT PRIOR TO ANY RELEASE FOR PRODUCTION OF EQUIPMENT SHOWN.

BALANCE

11. KITCHEN HOODS MUST BE BALANCED WITH KITCHEN.
12. KITCHEN SHALL BE NEGATIVE WITH RESPECT TO DINING AREA.
13. RESTAURANT SHALL BE POSITIVE WITH RESPECT TO AMBIENT PRESSURE.

ADDITIONAL

14. WRITTEN HOOD DIMENSIONS HAVE PRECEDENCE OVER SCALE.
15. SIGNED AND "APPROVED" COPIES OF THIS DOCUMENT MUST BE RECEIVED BY THE FACTORY PRIOR TO COMMENCEMENT OF FABRICATION.

GENERAL NOTES

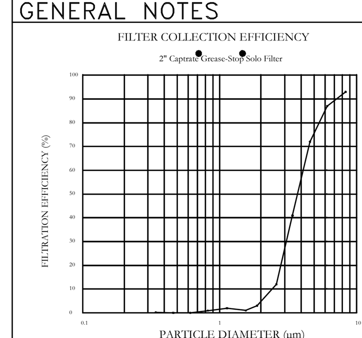

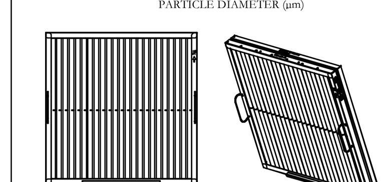

CaptiveAire Captrate Solo Filter
ETL Listed Grease Extracting Filters
Made From 430 Stainless Steel

FILTER DETAIL

REVISIONS	
DESCRIPTION	DATE:
△	
△	
△	
△	

CAPTIVEAIRE
www.captiveaire.com
Arizona Office
1717 E. Bell Road, SUITE 12, Phoenix, AZ, 85022 PHONE: (480) 926-6810 FAX: 8777192227 EMAIL: reg93@captiveaire.com

Shiprock Hotel - Shiprock, NM
SHIPROCK, NM, 87420

DATE: 8/28/2023
DWG.#: 6067318
DRAWN BY: tim.mathis
SCALE: 3/4" = 1'-0"
MASTER DRAWING
SHEET NO. 1

STAMP

DYRON MURPHY ARCHITECTS, P.C.
4505 Montbel Place NE, Albuquerque, New Mexico 87107

SHIPROCK PINNACLE HOTEL & RESTAURANT

SHIPROCK, NEW MEXICO
100% CONSTRUCTION DOCUMENTS
ISSUED FOR CONSTRUCTION
NOVEMBER 3, 2023

PROJECT NUMBER	DRAWN BY	PROJ MGR
2022.10	SK/DK	SK

EQUIPMENT EXHAUST HOODS

Sheet Title

Sheet Number of

Q402

5/3/2023 1:23:21 PM C:\Revit Locals\Shiprock Pinnacle_Restaurant_rirvinT8K3N.rvt
DYRON MURPHY ARCHITECTS, P.C.

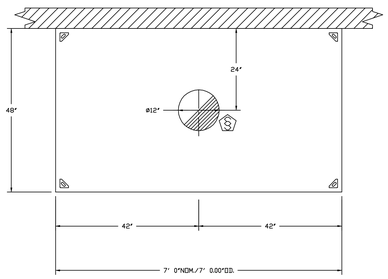

PLAN VIEW – HOOD #4 (85)
7' 0.00" LONG 4830VHB-G

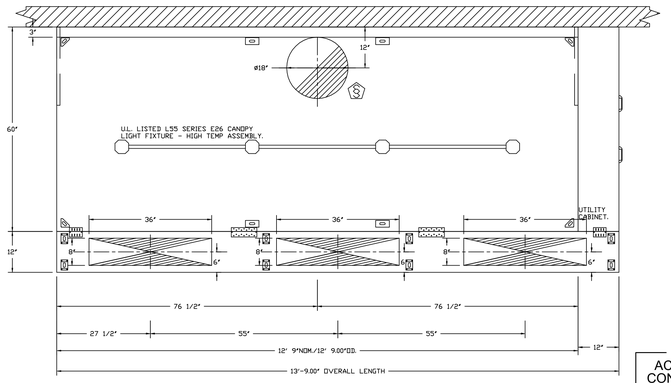

PLAN VIEW – HOOD #1 (36)
12' 9.00" LONG 6030ND-2-PSP-F
NOTE: ADDITIONAL HANGING ANGLES PROVIDED FOR HOODS 12' AND LONGER.

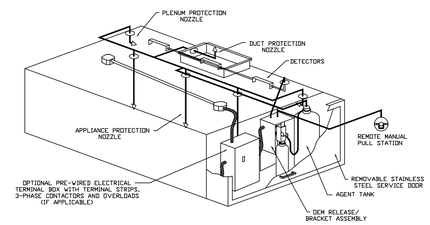

TYPICAL ANSUL R-102 SYSTEM LAYOUT

ACTUAL FIRE SYSTEM PIPING SCHEMATIC TO BE PROVIDED BY CONTRACTED FIRE SYSTEM DISTRIBUTOR AT TIME OF PERMITTING

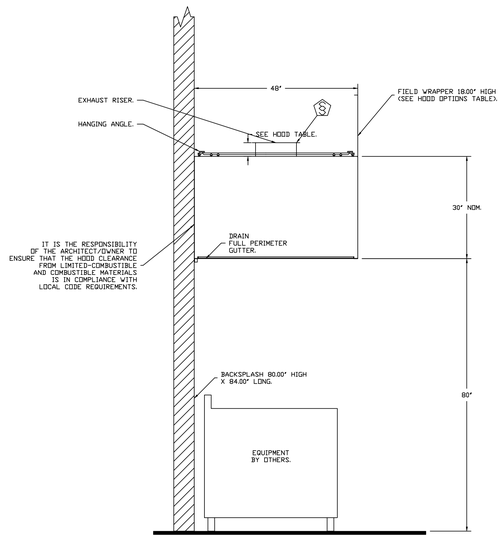

SECTION VIEW – MODEL 4830VHB-C
HOOD – #4 (85)

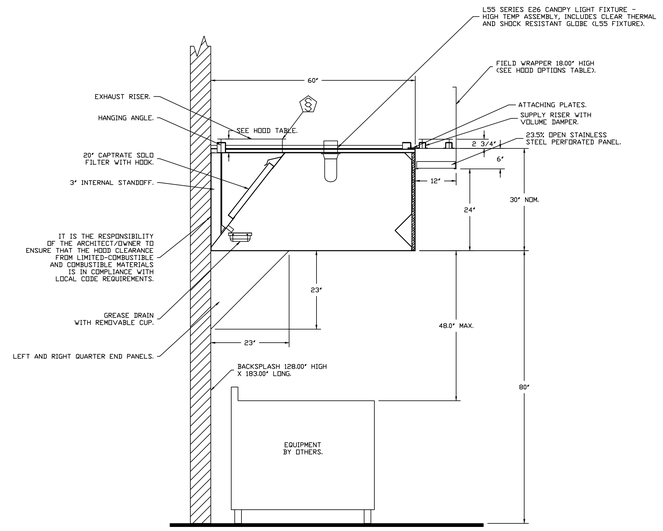

SECTION VIEW – MODEL 6030ND-2-PSP-F
HOOD – #1 (36)

REVISIONS

	DESCRIPTION	DATE
1		
2		
3		
4		

CAPTIVEAIRE
Arizona Office
1717 E. Bell Road, SUITE 12, Phoenix, AZ 85022 PHONE: (480)326-4810 FAX: 877-719-2227 EMAIL: reg36@captiveaire.com
www.captiveaire.com

Shiprock Hotel - Shiprock, NM
SHIPROCK, NM, 87420

DATE: 6/21/2023
DWG.#: 6067318
DRAWN BY: tim.mathis
SCALE: 3/4" = 1'-0"
MASTER DRAWING
SHEET NO. 2

STAMP

DYRON MURPHY ARCHITECTS, P.C.
4505 Montbel Place NE, Albuquerque, New Mexico 87107

SHIPROCK PINNACLE HOTEL & RESTAURANT

SHIPROCK, NEW MEXICO

100% CONSTRUCTION DOCUMENTS

ISSUED FOR CONSTRUCTION

NOVEMBER 3, 2023

PROJECT NUMBER	DRAWN BY	PROJ MGR
2022.10	SK/DK	SK

EQUIPMENT EXHAUST HOODS

Sheet Title

Sheet Number Q403 of

5/3/2023 1:23:21 PM C:\Revit Local\Shiprock Pinnacle_Restaurant_revit18N2N.rvt
DYRON MURPHY ARCHITECTS, P.C.

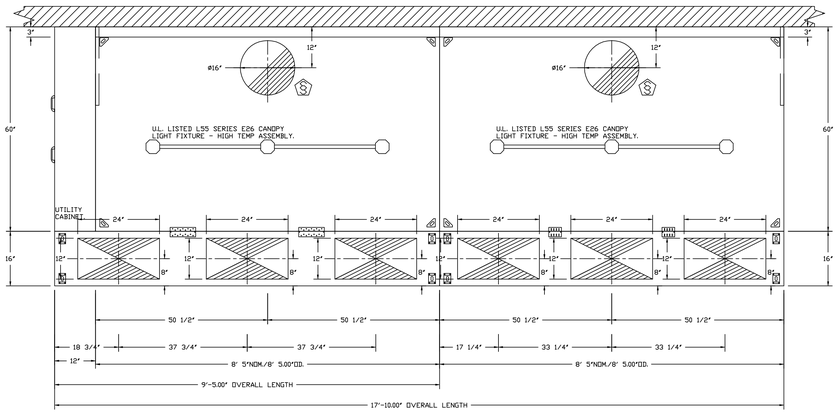

PLAN VIEW - HOOD #2 (55 (Left))
8' 5.00" LONG 6030ND-2-PSP-F

PLAN VIEW - HOOD #3 (55 (Right))
8' 5.00" LONG 6030ND-2-PSP-F

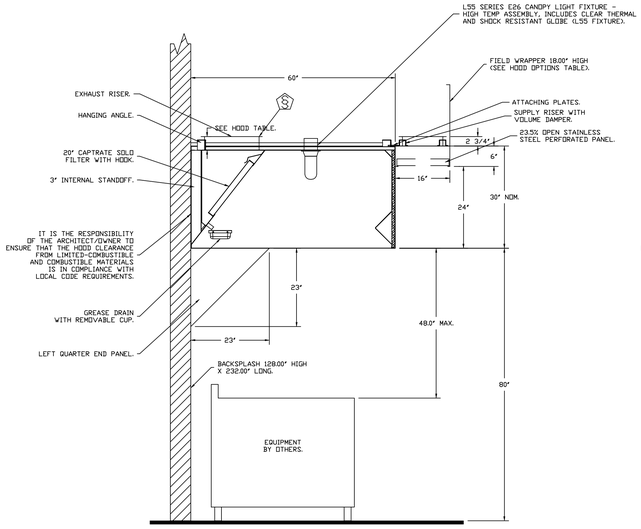

SECTION VIEW - MODEL 6030ND-2-PSP-F
HOOD - #2 (55 (Left))

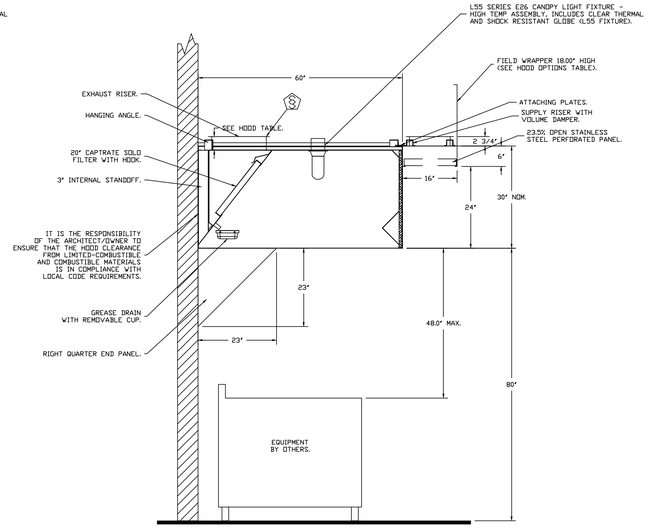

SECTION VIEW - MODEL 6030ND-2-PSP-F
HOOD - #3 (55 (Right))

REVISIONS

DESCRIPTION	DATE:
△	
△	
△	
△	

CAPTIVEAIRE
Arizona Office
1717 E. Bell Road, SUITE 12, Phoenix, AZ, 85022 PHONE: (480) 926-6810 FAX: 8777192227 EMAIL: reg93@captiveaire.com
www.captiveaire.com

Shiprock Hotel - Shiprock, NM
SHIPROCK, NM, 87420

DATE: 8/28/2023
DWG.#: 6067318
DRAWN BY: tim.mathis
SCALE: 3/4" = 1'-0"
MASTER DRAWING

SHEET NO. 3

STAMP

DYRON MURPHY ARCHITECTS, P.C.
4505 Montbel Place NE, Albuquerque, New Mexico 87107

SHIPROCK PINNACLE HOTEL & RESTAURANT

SHIPROCK, NEW MEXICO
100% CONSTRUCTION DOCUMENTS
ISSUED FOR CONSTRUCTION
NOVEMBER 3, 2023

PROJECT NUMBER	DRAWN BY	PROJ MGR
2022.10	SK/DK	SK

EQUIPMENT EXHAUST HOODS

Sheet Title

Sheet Number of

Q404

5/3/2023 1:23:21 PM C:\Revit Locals\Shiprock Pinnacle_Restaurant_rvn\TIMON.rvt
DYRON MURPHY ARCHITECTS, P.C.

ELECTRICAL PACKAGE - JOB#6067318

NO	TAG	PACKAGE #	LOCATION	SWITCHES		OPTION	FANS CONTROLLED					
				LOCATION	QUANTITY		FAN TAG	TYPE	Φ	HP	VOLT	FLA
1	56	DCV-2111	UTILITY CABINET LEFT	UTILITY CABINET LEFT	1 LIGHT	SMART CONTROLS DCV	KEF-1	EXHAUST	3	3.000	208	9.5
				HOOD # 2	1 FAN		KEF-2	EXHAUST	3	5.000	208	15.8
							MAU-1	SUPPLY	3	7.500	208	21.1

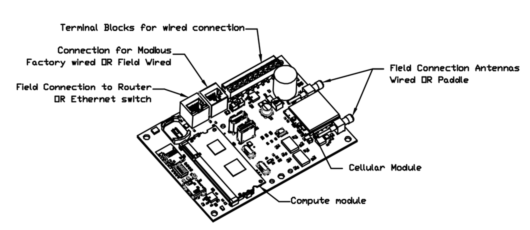

CASlink Monitor and Control

- Hood control panel to support communications to cloud-based Building Management System.
- Hood Control Panel to allow cloud-based Building Management System to monitor real time parameters outlined as MONITOR in the points list.
- Hood Control Panel to allow cloud-based Building Management System to control parameters outlined as CONTROL in the points list.
- Hood Control Panel to allow cloud-based Building Management System to implement SYSTEM ECONOMIZER control strategies for fully integrated Building Management.

MONITORING AND CONTROL POINTS LIST

DCV Packages	Function
Room Temperature	MONITOR
Duct Temperature(s)	MONITOR
MUA Discharge Temperature	MONITOR
Kitchen RTU Discharge Temperature	MONITOR
Fan Speed	MONITOR
Fan Amperage	MONITOR
Fan Power	MONITOR
VFD Faults	MONITOR
Controller Faults	MONITOR
Fan Faults	MONITOR
Fan Status	MONITOR
PCU Faults	MONITOR
PCU Filter Clog Percentages	MONITOR
Fire Condition	MONITOR
CORE Fire System	MONITOR
Building Pressures	MONITOR
Prep Time Button	MONITOR & CONTROL
Fans Button	MONITOR & CONTROL
Lights Button	MONITOR & CONTROL
Wash Button	MONITOR & CONTROL

SC Packages	Function
Room Temperature(s)	MONITOR
Duct Temperature(s)	MONITOR
MUA Discharge Temperature	MONITOR
Kitchen RTU Discharge Temperature	MONITOR
Controller Faults	MONITOR
Fan Faults	MONITOR
Fan Status	MONITOR
PCU Faults	MONITOR
PCU Filter Clog Percentages	MONITOR
Fire Condition	MONITOR
CORE Fire System	MONITOR
Building Pressures	MONITOR
Fans Button(s)	MONITOR & CONTROL
Lights Button(s)	MONITOR & CONTROL
Wash Button	MONITOR & CONTROL

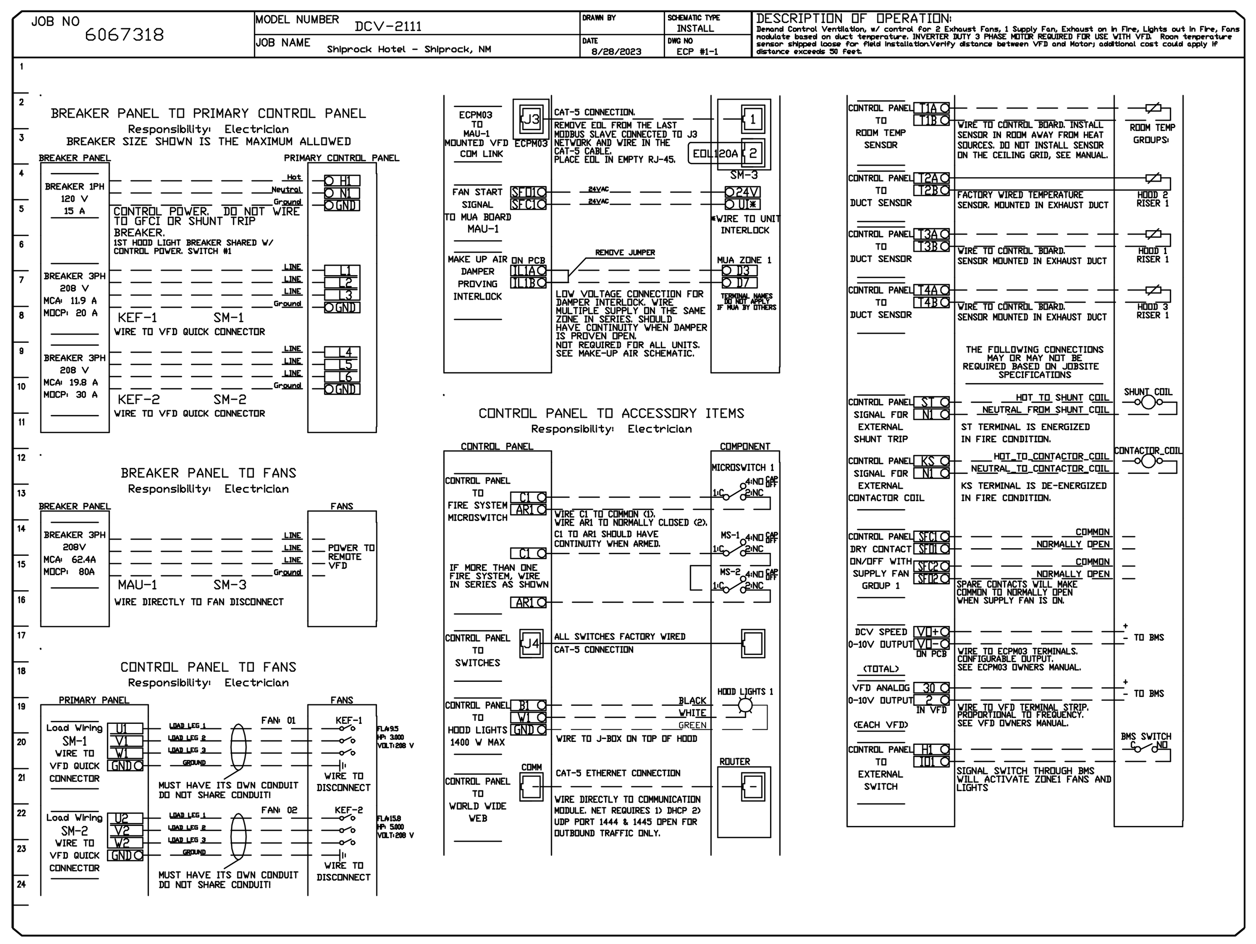

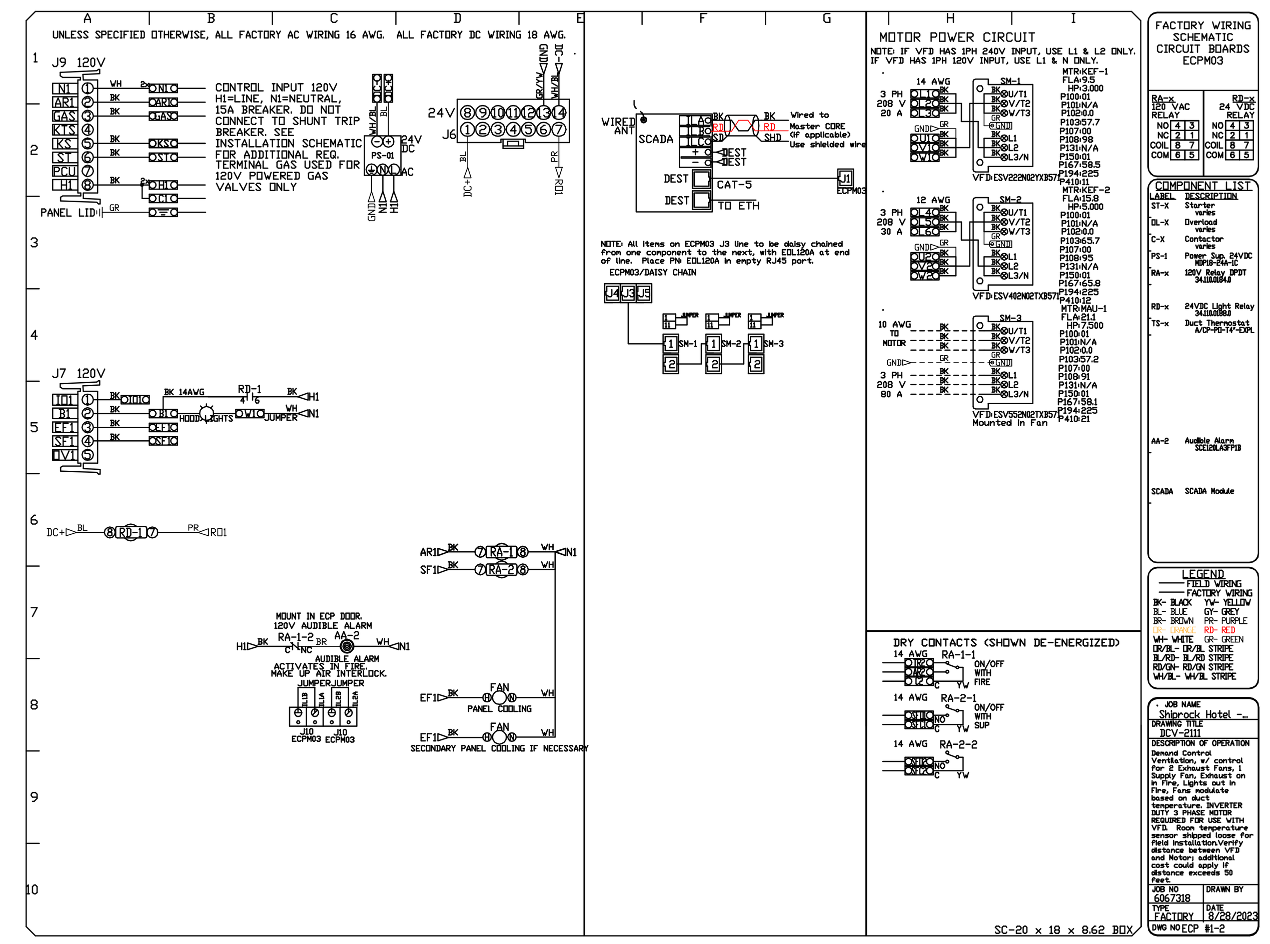

REVISIONS

DESCRIPTION	DATE:
△	
△	
△	
△	

www.captiveaire.com
Arizona Office
1717 E. Bell Road, SUITE 12, Phoenix, AZ, 85022 PHONE: (480) 926-6810 FAX: 8777192227 EMAIL: reg93@captiveaire.com

Shiprock Hotel - Shiprock, NM
SHIPROCK, NM, 87420

DATE: 8/28/2023
DWG.#: 6067318
DRAWN BY: tim.mathis
SCALE: 3/4" = 1'-0"
MASTER DRAWING
SHEET NO. 4

DEMAND CONTROL VENTILATION HOOD CONTROL PANEL SPECIFICATIONS:

- CONTROLS SHALL BE LISTED BY ETL (UL 508A) AND SHALL COMPLY WITH DEMAND VENTILATION SYSTEM TURNDOWN REQUIREMENTS OUTLINED IN IECC 403.7.5 (2021).
- THE CONTROL ENCLOSURE SHALL BE NEMA 1 RATED AND LISTED FOR INSTALLATION INSIDE OF THE EXHAUST HOOD UTILITY CABINET. THE CONTROL ENCLOSURE MAY BE CONSTRUCTED OF STAINLESS STEEL OR PAINTED STEEL.
- TEMPERATURE PROBE(S) LOCATED IN THE EXHAUST DUCT RISER(S) SHALL BE CONSTRUCTED OF STAINLESS STEEL.
- A DIGITAL CONTROLLER SHALL BE PROVIDED TO ACTIVATE THE HOOD EXHAUST FANS DYNAMICALLY BASED ON A FIXED DIFFERENTIAL BETWEEN THE AMBIENT AND DUCT TEMPERATURES SENSORS. THIS FUNCTION SHALL MEET THE REQUIREMENTS OF IMC 507.1.1.
- A DIGITAL CONTROLLER SHALL PROVIDE ADJUSTABLE HYSTERESIS SETTINGS TO PREVENT CYCLING OF THE FANS AFTER THE COOKING APPLIANCES HAVE BEEN TURNED OFF AND/OR THE HEAT IN THE EXHAUST SYSTEM IS REDUCED.
- A DIGITAL CONTROLLER SHALL PROVIDE AN ADJUSTABLE MINIMUM FAN RUN-TIME SETTING TO PREVENT FAN CYCLING.
- VARIABLE FREQUENCY DRIVES (VFDS) SHALL BE PROVIDED FOR FANS AS REQUIRED. THE DIGITAL CONTROLLER SHALL MODULATE THE VFDS BETWEEN A MINIMUM SETPOINT AND A MAXIMUM SETPOINT ON DEMAND. THE DUCT TEMPERATURE SENSOR INPUT(S) TO THE DIGITAL CONTROLLER SHALL BE USED TO CALCULATE THE SPEED REFERENCE SIGNAL.
- THE VFD SPEED RANGE OF OPERATION SHALL BE FROM 0% TO 100% FOR THE SYSTEM, WITH THE ACTUAL MINIMUM SPEED SET AS REQUIRED TO MEET MINIMUM VENTILATION REQUIREMENTS.
- AN INTERNAL ALGORITHM TO THE DIGITAL CONTROLLER SHALL MODULATE SUPPLY FAN VFD SPEED PROPORTIONAL TO ALL EXHAUST FANS THAT ARE LOCATED IN THE SAME FAN GROUP AS THE SUPPLY FAN.
- THE SYSTEM SHALL OPERATE IN PREP MODE DURING LIGHT COOKING LOAD OR COOL DOWN MODE WHEN SUFFICIENT HEAT REMAINS UNDERNEATH THE HOOD SYSTEM AFTER COOKING OPERATIONS HAVE COMPLETED. OPERATION DURING EITHER OF THESE PERIODS WILL DISABLE THE SUPPLY FANS AND PROVIDE AN EXHAUST FAN SPEED THAT IS EQUAL TO THE MINIMUM VENTILATION REQUIREMENT.
- A DIGITAL CONTROLLER SHALL DISABLE THE SUPPLY FAN(S), ACTIVATE THE EXHAUST FAN(S), ACTIVATE THE APPLIANCE SHUNT TRIP, AND DISABLE AN ELECTRIC GAS VALVE AUTOMATICALLY WHEN FIRE CONDITION IS DETECTED ON A COVERED HOOD.
- A DIGITAL CONTROLLER SHALL ALLOW FOR EXTERNAL BMS FAN CONTROL VIA DRY CONTACT (EXTERNAL CONTROL SHALL NOT OVERRIDE FAN OPERATION LOGIC AS REQUIRED BY CODE).
- AN LCD INTERFACE SHALL BE PROVIDED WITH THE FOLLOWING FEATURES:
  A. ON/OFF PUSH BUTTON FAN & LIGHT SWITCH ACTIVATION.
  B. INTEGRATED GAS VALVE RESET FOR ELECTRONIC GAS VALVES (NO RESET RELAY REQUIRED).
  C. VFD FAULT DISPLAY WITH AUDIBLE & VISUAL ALARM NOTIFICATION.
  D. DUCT TEMPERATURE SENSOR FAILURE DETECTION WITH AUDIBLE & VISUAL ALARM NOTIFICATION.
  E. MIS-WIRED DUCT TEMPERATURE SENSOR DETECTION WITH AUDIBLE & VISUAL ALARM NOTIFICATION.
  F. A SINGLE LOW VOLTAGE CAT-5 RJ45 WIRING CONNECTION.
  G. AN ENERGY SAVINGS INDICATOR THAT UTILIZES MEASURED KWH FROM THE VFDS.

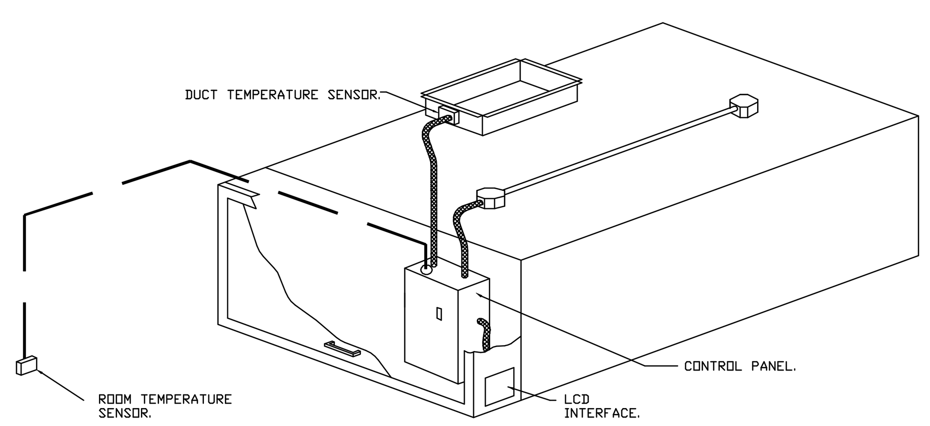

TYPICAL HOOD CONTROL PANEL INSTALLATION

SEQUENCE OF OPERATIONS:

THE HOOD CONTROL PANEL IS CAPABLE OF OPERATING IN ONE OR MORE OF THE FOLLOWING STATES AT ANY GIVEN TIME:

- AUTOMATIC: THE SYSTEM OPERATES BASED ON THE DIFFERENTIAL BETWEEN ROOM TEMPERATURE AND THE TEMPERATURE AT THE HOOD CAVITY OR EXHAUST DUCT COLLAR. FANS ACTIVATE AT A CONFIGURABLE TEMPERATURE DIFFERENTIAL THRESHOLD. DEPENDING ON THE JOB CONFIGURATION EACH FAN ZONE CAN BE CONFIGURED AS STATIC OR DYNAMIC. THESE TERMS REFER TO WHETHER A VARIABLE MOTOR (SUCH AS EC MOTORS OR VFD DRIVEN MOTORS) MODULATE WITH TEMPERATURE. IF THE PANEL IS EQUIPPED WITH VARIABLE SPEED FANS AND THE ZONE IS DEFINED AS "DYNAMIC", THESE WILL MODULATE WITHIN A USER-DEFINED RANGE BASED ON THE TEMPERATURE DIFFERENTIAL. PANELS EQUIPPED WITH VARIABLE SPEED FANS AND A FAN ZONE DEFINED AS "STATIC", FANS WILL RUN AT A SET SPEED CALCULATED FOR THE DRIVE. DEMAND CONTROL VENTILATION SYSTEMS ARE CAPABLE OF MODULATING EXHAUST AND MAKE UP AIR FAN SPEEDS PER THE REQUIREMENTS OUTLINED IN IECC 403.7.5 (2021).
- MANUAL: THE SYSTEM OPERATES BASED ON HUMAN INPUT FROM AN HMI.
- SCHEDULE: A WEEKLY SCHEDULE CAN BE SET TO RUN FANS FOR A SPECIFIED PERIOD THROUGHOUT THE DAY. THERE ARE THREE OCCUPIED TIMES PER DAY TO ALLOW FOR THE USER TO SET UP A TIME THAT IS SUITABLE TO THEIR NEEDS. ANY TIME THAT IS WITHIN THE DEFINED OCCUPIED TIME, THE SYSTEM WILL RUN AT MODULATION MODE AND FOLLOW THE FAN PROCEDURE ALGORITHM BASED ON TEMPERATURE DURING THIS TIME. DURING UNOCCUPIED TIME, THE SYSTEM WILL HAVE AN EXTRA OFFSET TO PREVENT UNINTENDED ACTIVATION OF THE SYSTEM DURING A TIME WHERE THE SYSTEM IS NOT BEING OCCUPIED.
- OTHER: THE SYSTEM OPERATES BASED ON THE INPUT FROM AN EXTERNAL SOURCE (DDC, BMS OR HARD-WIRED INTERLOCK).
- FIRE: UPON ACTIVATION OF THE HOOD FIRE SUPPRESSION SYSTEM, THE EXHAUST FAN WILL COME ON OR CONTINUE TO TO RUN, THE HOOD MAKEUP AIR WILL SHUTDOWN, AND A SIGNAL WILL BE SENT FOR ACTIVATING THE SHUNT TRIP BREAKER PROVIDED BY THE ELECTRICIAN. FUEL GAS WILL SHUT OFF VIA A MECHANICAL/ELECTRICAL GAS VALVE ACTUATED BY THE HOOD FIRE SUPPRESSION SYSTEM.

STAMP

DYRON MURPHY ARCHITECTS, P.C.
4505 Montbel Place NE, Albuquerque, New Mexico 87107

SHIPROCK PINNACLE HOTEL & RESTAURANT

SHIPROCK, NEW MEXICO

100% CONSTRUCTION DOCUMENTS

ISSUED FOR CONSTRUCTION

NOVEMBER 3, 2023

PROJECT NUMBER	DRAWN BY	PROJ MGR
2022.10	SK/DK	SK

EQUIPMENT EXHAUST HOODS

Sheet Title

Sheet Number of

Q405

5/3/2023 1:23:21 PM C:\Revit Locals\Shiprock Pinnacle_Restaurant_rirvinT8K3N.rvt
DYRON MURPHY ARCHITECTS, P.C.

SYMBOLS

- SODA LINE CONDUIT (BY GENERAL CONTRACTOR)
- BEER LINE CONDUIT (BY GENERAL CONTRACTOR)
- WALL BACKING FOR EQUIPMENT ABOVE 36" (BY GENERAL CONTRACTOR)
- S/S WALL FLASHING (BY K.E.C.)
- NON COMBUSTABLE WALL MATERIAL (BY GENERAL CONTRACTOR)
- CONCRETE CURB (BY GENERAL CONTRACTOR)

NOTE:
1. SODA AND BEER CONDUIT LINES ARE FOR SCHEMATIC PURPOSES ONLY.
2. G.C. TO COORDINATE CONDUIT LINE RUNS WITH ARCHITECTURAL & STRUCTURAL PLANS.

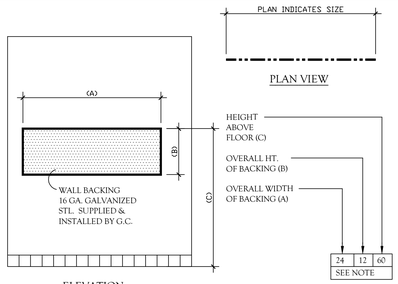

ELEVATION

* NOTE: WALL BACKING LENGTHS ARE MINIMUM. ALWAYS EXTEND TO NEXT STUD OVER IN EACH DIRECTION. SEE BUILDING CONDITIONS PLAN.

1 EQUIPMENT WALL BACKING DETAIL

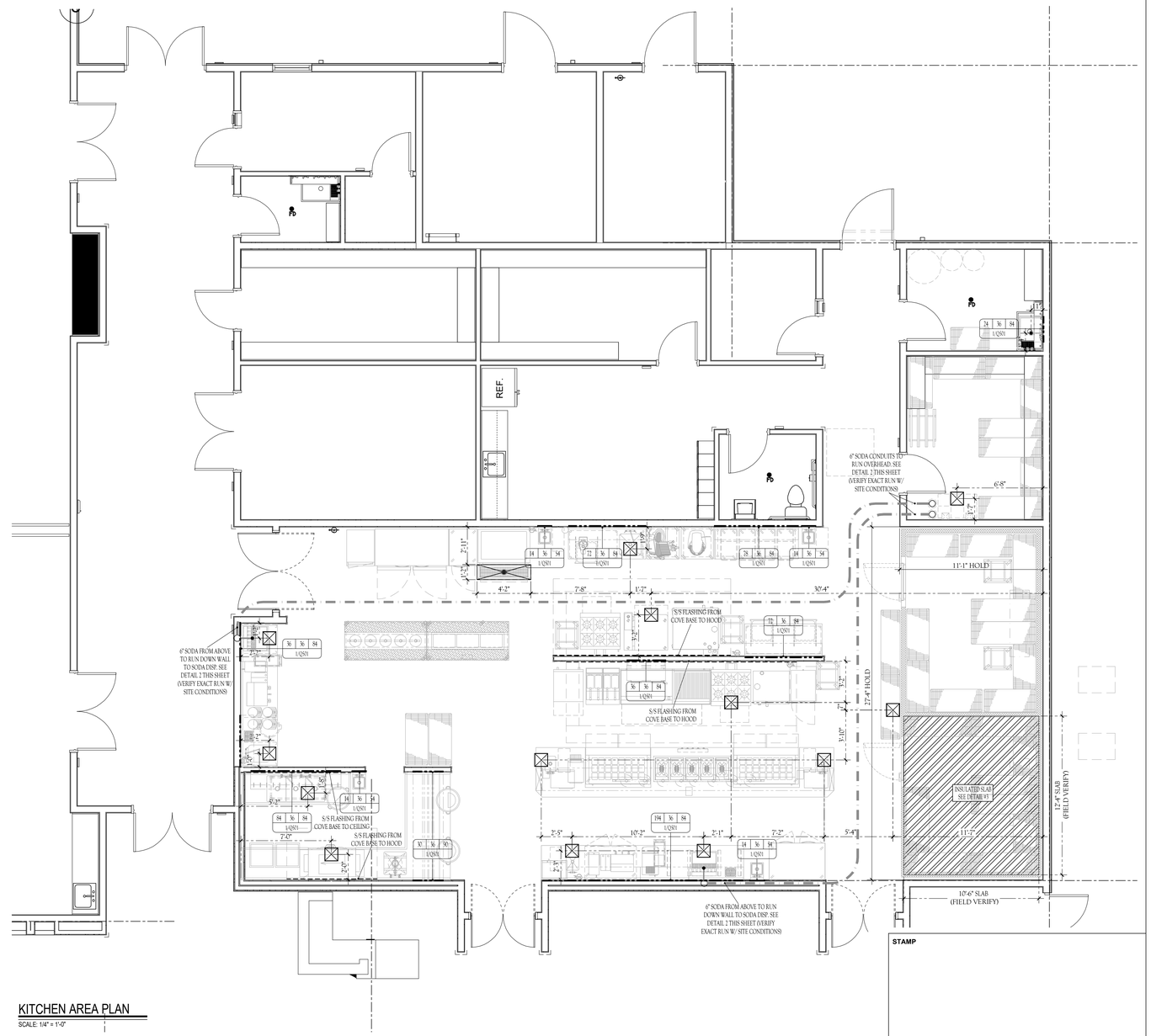

KITCHEN AREA PLAN
SCALE: 1/4" = 1'-0"

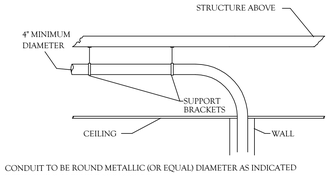

CONDUIT TO BE ROUND METALLIC (OR EQUAL) DIAMETER AS INDICATED WITH MINIMUM BEND RADIUS OF 24".
FURNISH ALL METAL CONDUIT AS DESCRIBED IN THE NATIONAL ELECTRICAL CODE REFERENCING, CONDUIT, METAL DUCT, SWEEP ELBOWS, OR EQUAL.

NOTE:
PROVIDE A 12"X12" PULL BOX AT 18" A.F.F. FOR BEVERAGE CONDUITS IN WALLS.
VENDOR TO RUN BEVERAGE LINES TO DISPENSERS AS REQUIRED.

2 SODA CONDUIT DETAIL (OVERHEAD)
VERIFY EXACT LOCATIONS WITH OWNER/VENDOR.

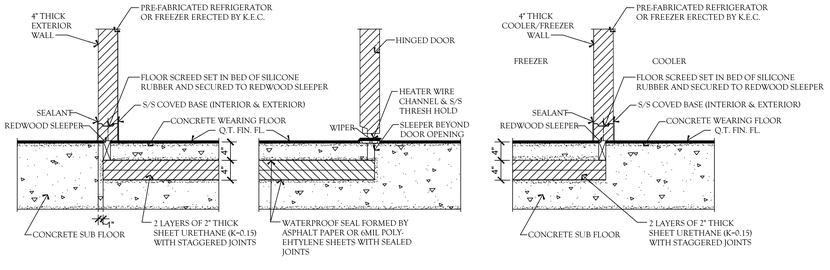

TYPICAL | AT DOOR LOCATION | AT FREEZER/COOLER WALL

3 INSULATED SLAB DETAIL
NOT TO SCALE

STAMP

DYRON MURPHY ARCHITECTS, P.C.
4505 Montbel Place NE, Albuquerque, New Mexico 87107

SHIPROCK PINNACLE HOTEL & RESTAURANT

SHIPROCK, NEW MEXICO
100% CONSTRUCTION DOCUMENTS
ISSUED FOR CONSTRUCTION
NOVEMBER 3, 2023

PROJECT NUMBER	DRAWN BY	PROJ MGR
2022.10	SK/DK	SK

EQUIPMENT SPECIAL CONDITIONS PLAN

Sheet Title

Sheet Number of

Q501

5/3/2023 1:23:21 PM C:\Revit Local\Shiprock Pinnacle_Restaurant_enviv1ROIN.rvt
DYRON MURPHY ARCHITECTS, P.C.

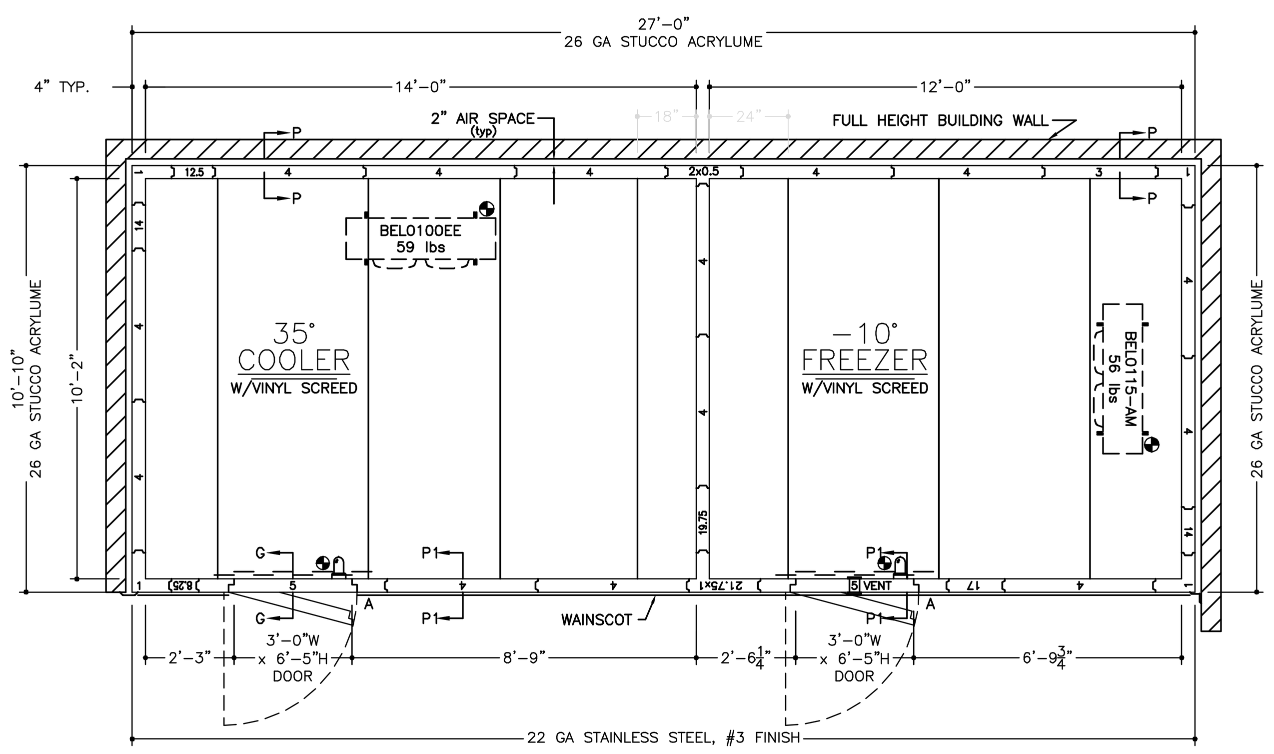

~SPECIFICATIONS~

BOX HEIGHT: FREEZER – 9'-0" OVERALL (8'-8" INTERIOR)
COOLER – 9'-0" OVERALL (8'-8" INTERIOR)

CONSTRUCTION: FOAMED IN PLACE
NSF LISTED, STANDARD NO. 7

INSULATION: 4" URETHANE, FINISHED PANEL
UL CLASSIFIED FLAME SPREAD 20
CORE SMOKE DEVELOPED 250

INSTALLATION: INDOOR

FLOOR: (SEE DETAILS) FREEZER – FLOORLESS (VINYL SCREED PROVIDED)
INSULATED SLAB (SLAB, VISQUEEN & INSULATION BY OTHERS)
COOLER – FLOORLESS (VINYL SCREED PROVIDED)
INSULATED SLAB (SLAB, VISQUEEN & INSULATION BY OTHERS)

DOOR HARDWARE & ACCESSORIES: EACH DOOR
DEADBOLT HANDLE W/KEYED CYLINDER LOCK, PADLOCK PROVISION & QUARTER TURN INSIDE RELEASE (EXTERIOR DOOR ONLY)
FRAME HEATER WIRE
HYDRAULIC DOOR CLOSER
IC WALK-IN DOOR CONTROLLER AND ALARM SYSTEM INCLUDING:
- DIGITAL THERMOMETER WITH 3 DIGIT LED DISPLAY
- HIGH AND LOW TEMPERATURE ALARM WITH INTEGRATED BUZZER
- AIR TEMPERATURE PROBE
- INTEGRATED LIGHT SWITCH WITH AUTOMATIC LIGHT OFF
- CONNECTION TO REMOTE LIGHT SWITCH
- DOOR AND WINDOW HEATER CONTROL
- ADAPTIVE SETTINGS

KASON SCREW-IN VAPOR PROOF LIGHT FIXTURE W/8.5 WATT SYLVANIA LED BULB & GLOBE
STRIP CURTAIN
2 – STD. CAM RISE HINGES
1/10" DIAMOND ALUMINUM TREAD PLATE KICKPLATES @ 36" HIGH I/S & O/S DOOR & FRAME
KASON #1827 PRESSURE RELIEF VENT (FREEZER DOOR ONLY)
SLAM BRACES

ACCESSORIES: (SHIPPED LOOSE) 2 – PCS. TRIM ANGLE
4 – 48" (1810LC) LED LIGHT FIXTURE(S) @ 40W EACH
1/10" DIAMOND ALUMINUM TREAD PLATE WAINSCOT @ 36" HIGH (EXPOSED EXTERIOR)

METAL FINISHES: INTERIOR WALLS & CEILING – WHITE 26 GA STUCCO GALVANIZED
EXPOSED EXTERIOR – 22 GA STAINLESS STEEL, #3 FINISH
UNEXPOSED EXTERIOR – 26 GA STUCCO ACRYLUME
EXTERIOR CEILING – 26 GA STUCCO ACRYLUME

REFRIGERATION: U.L. LISTED, AIR COOLED, OUTDOORS
FREEZER CONDENSING UNIT: 1 – STD. PRE-ASSEMBLED REMOTE – HERMETIC – SCROLL 2.60 HP MODEL NO. FFAL-A26Z-TFC-075 (R-448A)
EVAPORATOR: 1 – MODEL NO. BEL0100BS6EE W/E.C. MOTORS & I.R.C.
COOLER CONDENSING UNIT: 1 – STD. PRE-ASSEMBLED REMOTE – HERMETIC – SCROLL 2.00 HP MODEL NO. FFAP-A20Z-TFC-075 (R-448A)
EVAPORATOR: 1 – MODEL NO. BEL0115BS6AM W/E.C. MOTORS & I.R.C.

REFRIGERATION ACCESSORIES: 2 – WINTERIZATION CONTROLS/LASA
2 – U.L. LISTED COMPRESSOR COVER(S) (HINGED)
2 – STAND(S) FOR U.L. COVER (18" HIGH)

NOTE: THE LARGEST WALK-IN PANEL ON THIS JOB IS 57.5" x 104".
THE LARGEST ROOF PANEL ON THIS JOB IS 46" x 130".
CUSTOMER IS TO VERIFY THAT THIS PANEL SIZE WILL NOT CONFLICT WITH ANY JOB SITE RESTRICTIONS.

NOTE: CUSTOMER IS TO VERIFY ALL DIMENSIONS, SECTIONS, DETAILS AND SPECIFICATIONS

NOTE: MAXIMUM LIGHT CIRCUIT LOAD IS 1200W 120VAC TUNGSTEN, 5A 120VAC ELECTRONIC BALAST. FOR HIGHER LOADS ADDITIONAL LIGHT FIXTURES MUST BE CONTROLLED VIA RELAY (BY OTHERS).

ELECTRICAL DATA	
⊕ = POINT OF ELECTRICAL CONNECTIONS.	
FREEZER	
CONDENSING UNIT:	208-230V/60/3ø 14.2/19.8/30.0 (RLA/MCA/MOP)
EVAPORATOR:	208-230v/60/1ø 1.5/9.5 AMPS
COOLER	
CONDENSING UNIT:	208-230V/60/3ø 8.0/13.9/20.0 (RLA/MCA/MOP)
EVAPORATOR:	208-230v/60/1ø 1.1 AMPS
WALK-IN DOORS:	115v/1ø – 350w*

*NOTE: ADD WATTAGE FOR EACH ADDITIONAL LIGHT FIXTURE IN ACCESSORIES.

INSULATION R-VALUES		
PANEL TYPE	COOLER	FREEZER
4" WALLS, ROOFS	R-29	R-32
5" WALLS, ROOFS	R-36	R-40
FLOORS	R-25	R-28
DOORS	R-32	

COOLER DOOR	
DOOR FRAME KWHr/DAY	0.312
CONDENSING UNIT AWEF VALUE	7.6
EVAP AWEF VALUE	9.0

FREEZER DOOR	
DOOR FRAME KWHr/DAY	2.016
CONDENSING UNIT AWEF VALUE	3.15
EVAP AWEF VALUE	4.0

AMERICAN PANEL WALK-IN COOLERS AND FREEZERS COMPLY WITH THE 2021 INTERNATIONAL ENERGY CONSERVATION CODE (IECC), SECTION C403.11

THIS AMERICAN PANEL WALK-IN WILL BE MANUFACTURED TO UL & NSF REQUIREMENTS. AMERICAN PANEL ACCEPTS NO LIABILITY FOR LOCAL CODE REQUIREMENTS OF WHICH AMERICAN PANEL HAS NOT BEEN MADE AWARE OF IN WRITING PRIOR TO FABRICATION.

ITEM #13

☐ APPROVED — SIGNATURE ______
☐ APPROVED AS NOTED — PRINT NAME ______
☐ REVISE & RESUBMIT — DATE ______

1) Please verify that door swing and location are correct.
2) If this walk-in is to be installed in a depression, or quarry tile is to be applied to the interior, depression depths or tile thickness must be specified to insure proper door height.
3) All site preparation, floor or slab construction, plumbing, electrical connections (including control wiring) by others.
4) ⊕ Electrical: 115-60-1 required above latch side of each door, through ceiling, to operate frame heater and light.
5) Special note to General Contractor and his Sub Contractor for quarry tile or concrete wearing floors: the sheet metal panel facings may be susceptible to staining due to excessive moisture created by hydration of concrete type materials. Therefore, it is absolutely necessary that each room be properly ventilated. Also note that special precautions must be taken when using muriatic acid due to effects hydrochloric acid fumes have on aluminum and stainless steel.
6) This drawing and information contained herein are the exclusive property of American Panel Corporation. It shall be returned to American Panel Corporation upon demand and shall not be reproduced in whole or part, disclosed to anyone else, or used without the written consent of American Panel Corporation.

American Panel
AMERICAN PANEL CORPORATION
5800 S.E. 78th St. Ocala, Florida 34472
Ph. (352) 245-7055 Fax (352) 245-0726

CUSTOMER: LANDMARK KITCHEN DESIGN, L.L.C.			
PROJECT: SHIPROCK PINNACLE RESTAURANT – ALBUQUERQUE, NM			
DATE: 06/26/23	DRAWN BY: CP/DMM	P.O.#:	
SCALE: 5/16"=1'-0"	PROPOSAL#: PD207287	JOB#:	SHEET 1 of 3

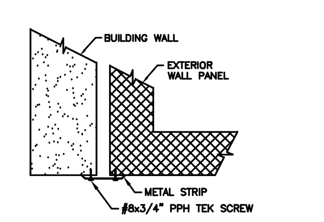

TRIM ANGLE
DETAIL #3

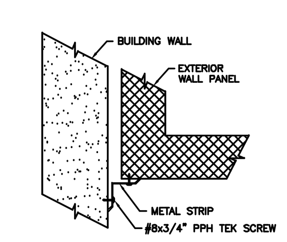

TRIM ANGLE
DETAIL #2

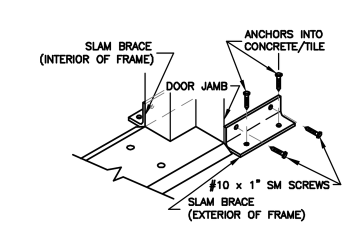

SLAM BRACE
COMPARTMENT W/SCREED

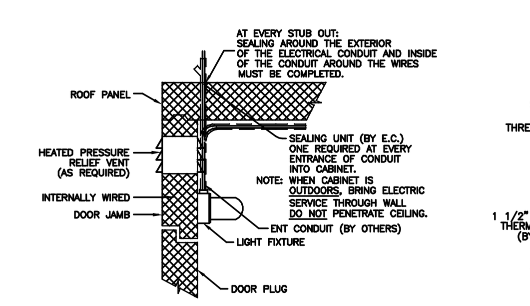

DOOR ELECTRICAL CONNECTION

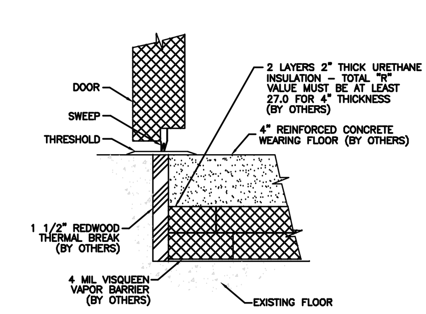

SECTION G – G

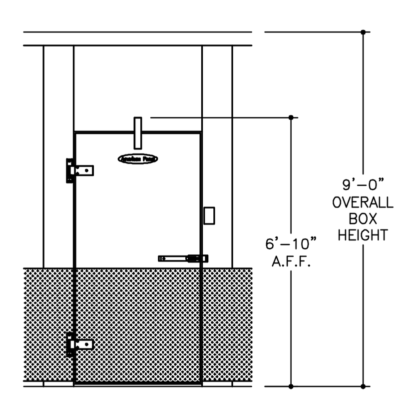

COOLER DOOR ELEVATION

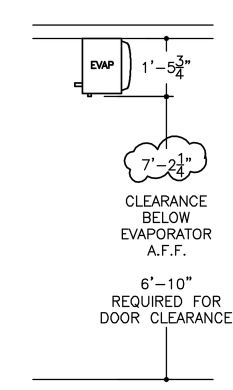

SECTION AT EVAPORATOR
TYP.

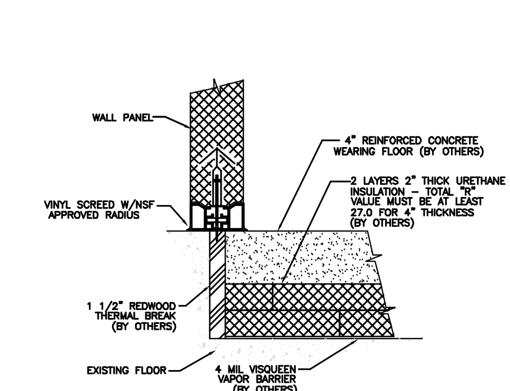

SECTION P – P

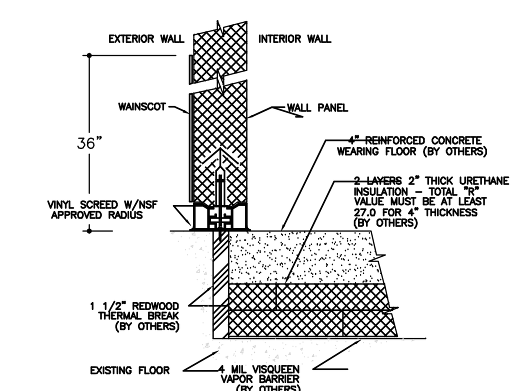

SECTION P1 – P1

☐ APPROVED — SIGNATURE ______
☐ APPROVED AS NOTED — PRINT NAME ______
☐ REVISE & RESUBMIT — DATE ______

1) Please verify that door swing and location are correct.
2) If this walk-in is to be installed in a depression, or quarry tile is to be applied to the interior, depression depths or tile thickness must be specified to insure proper door height.
3) All site preparation, floor or slab construction, plumbing, electrical connections (including control wiring) by others.
4) ⊕ Electrical: 115-60-1 required above latch side of each door, through ceiling, to operate frame heater and light.
5) Special note to General Contractor and his Sub Contractor for quarry tile or concrete wearing floors: the sheet metal panel facings may be susceptible to staining due to excessive moisture created by hydration of concrete type materials. Therefore, it is absolutely necessary that each room be properly ventilated. Also note that special precautions must be taken when using muriatic acid due to effects hydrochloric acid fumes have on aluminum and stainless steel.
6) This drawing and information contained herein are the exclusive property of American Panel Corporation. It shall be returned to American Panel Corporation upon demand and shall not be reproduced in whole or part, disclosed to anyone else, or used without the written consent of American Panel Corporation.

American Panel
AMERICAN PANEL CORPORATION
5800 S.E. 78th St. Ocala, Florida 34472
Ph. (352) 245-7055 Fax (352) 245-0726

CUSTOMER: LANDMARK KITCHEN DESIGN, L.L.C.			
PROJECT: SHIPROCK PINNACLE RESTAURANT – ALBUQUERQUE, NM			
DATE: 06/26/23	DRAWN BY: CP/DMM	P.O.#:	
SCALE: 5/16"=1'-0"	PROPOSAL#: PD207287	JOB#:	SHEET 3 of 3

STAMP

DYRON MURPHY ARCHITECTS, P.C.
4505 Montbel Place NE, Albuquerque, New Mexico 87107

SHIPROCK PINNACLE HOTEL & RESTAURANT

SHIPROCK, NEW MEXICO

100% CONSTRUCTION DOCUMENTS

ISSUED FOR CONSTRUCTION

NOVEMBER 3, 2023

PROJECT NUMBER	DRAWN BY	PROJ MGR
2022.10	SK/DK	SK

Sheet Title

EQUIPMENT SPECIAL CONDITIONS PLAN

Sheet Number of

Q502

5/3/2023 1:23:21 PM C:\Revit Locals\Shiprock Pinnacle_Restaurant_rirvinT8K3N.rvt
DYRON MURPHY ARCHITECTS, P.C.

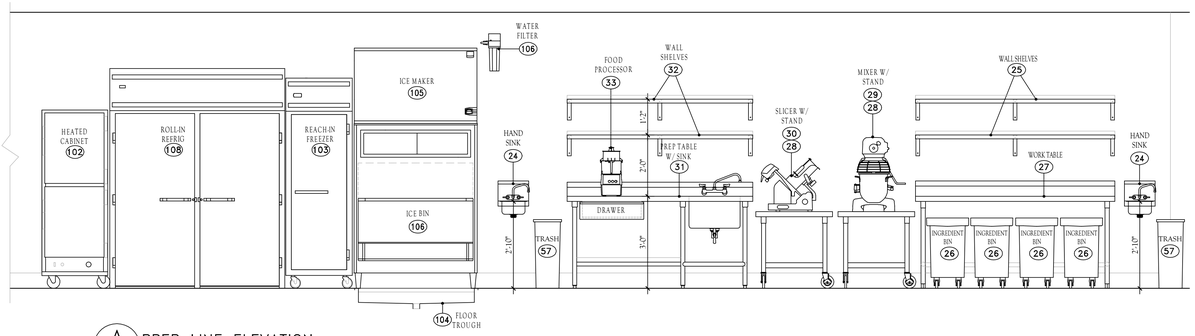

A Q101 PREP LINE ELEVATION
1/2"=1'-0"

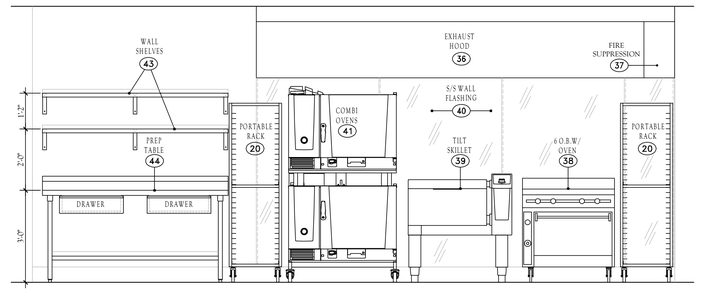

B Q101 PREP COOK LINE ELEVATION
1/2"=1'-0"

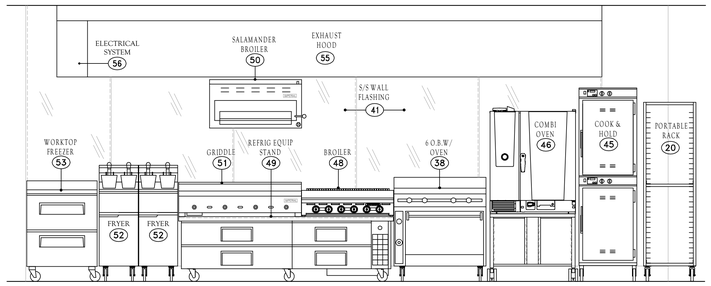

C Q101 COOK LINE ELEVATION
1/2"=1'-0"

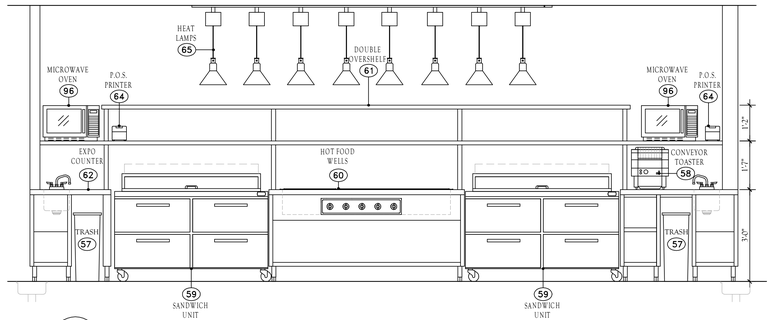

D Q101 COOK COUNTER ELEVATION
1/2"=1'-0"

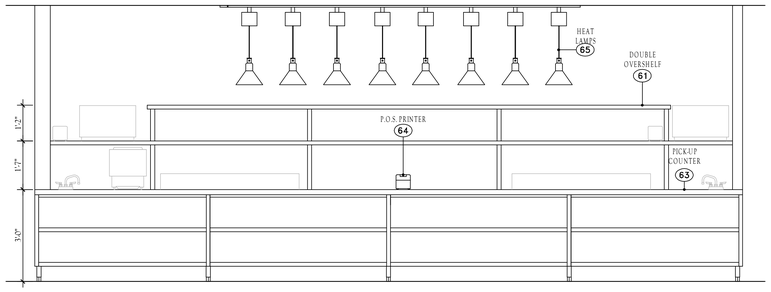

E Q101 PICK-UP COUNTER ELEVATION
1/2"=1'-0"

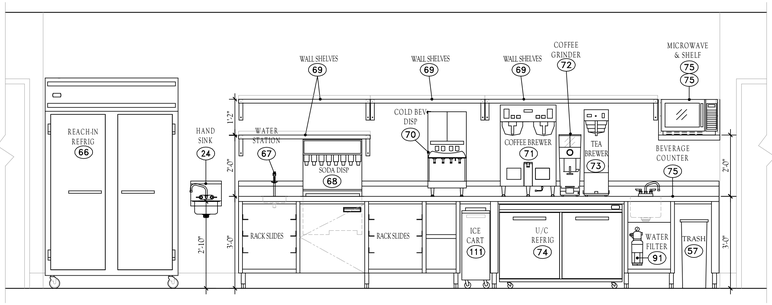

F Q101 BEVERAGE COUNTER ELEVATION
1/2"=1'-0"

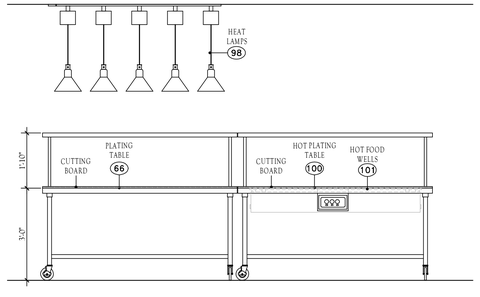

G Q101 PLATING TABLES ELEVATION
1/2"=1'-0"

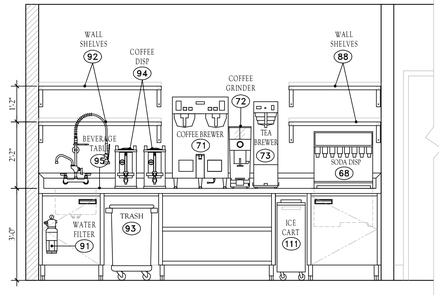

H Q101 BEVERAGE TABLE ELEVATION
1/2"=1'-0"

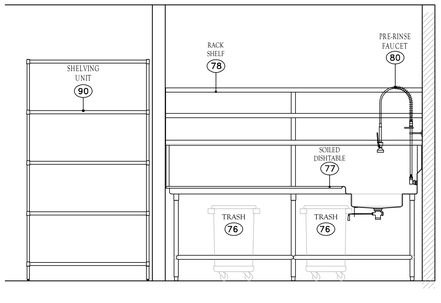

I Q101 WARE WASHING ELEVATION
1/2"=1'-0"

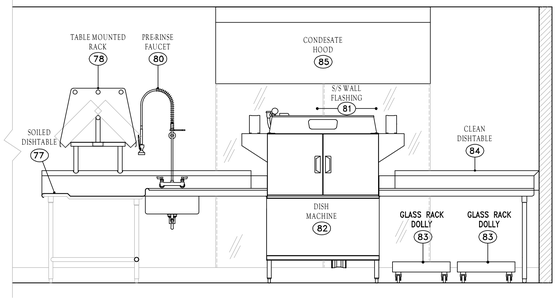

J Q101 WARE WASHING ELEVATION
1/2"=1'-0"

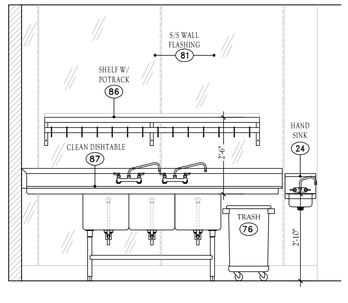

K Q101 3-COMP SINK ELEVATION
1/2"=1'-0"

STAMP

DYRON MURPHY ARCHITECTS, P.C.

4505 Montbel Place NE, Albuquerque, New Mexico 87107

SHIPROCK PINNACLE HOTEL & RESTAURANT

SHIPROCK, NEW MEXICO

100% CONSTRUCTION DOCUMENTS

ISSUED FOR CONSTRUCTION

NOVEMBER 3, 2023

PROJECT NUMBER	DRAWN BY	PROJ MGR
2022.10	SK/DK	SK

EQUIPMENT ELEVATIONS

Sheet Title

Sheet Number of

Q601

5/2/2023 12:21 PM C:\Revit Local\Shiprock Pinnacle_Restaurant_dryan78KXn.rvt

DYRON MURPHY ARCHITECTS, P.C.

GENERAL CONTRACTOR NOTES:

1. General Contractor to cut and provide holes through ceiling,roofs, walls and floors for ducts, refrig. lines etc. in accordance with local fire and building codes and in accordance with duct sizes specified. General Contractor to provide the resealing of all holes (including the "moping-in" of fan curbs and roof jacks.) General Contractor to provide all duct fire separation enclosures, wrappings, etc. as may be required by local building and fire codes.

2. Where noise or vibration producing equipment (dish machine, disposer, etc. is located adjacent to dining areas and/or any public areas. Provisions should be made by the General Contractor to "double stud" and sound proof common walls.

3. All roof curb and roof jacks to be provided, located and installed by G.C. including resealing of roof and roof penetrations.

4. "FS" Drawings are provided for the sole purpose of indicating outlet locations and equipment requirements only and do not relieve the General Contractor or subcontractor of the responsibility of complying with all applicable codes. Please see architect's drawings for all other requirements and codes.

5. It is the responsibility of the Owner, Architect and/or General Contractor to inform the K.E.C. in writing, any and all changes and all addendums to plans which are made prior to and during construction. K.E.C. assumes no responsibility for equipment deviations of size and/or utilities from lack of this information. The Owner will be responsible for all cost incurred by failure to give K.E.C. notice of changes.

6. Last dated revisions void all previous plans.

7. General Contractor to provide floor recesses (flat and level). Vapor Barriers and built in insulated floors (as shown on plans). if applicable.

8. Floor finish, cove base and interior cove in walk-in boxes to be provided by General Contractor unless otherwise specified by K.E.C.

9. Sleeves & Conduits to be provided by General Contractor in walls, floors & ceiling for lines (drains, refrigeration, etc.) to pass through and G.C.to reseal after lines are run.
   All conduit to be round metal, transite, P.V.C. or equal diameter as indicated on plan, minimum bending radius to be 24", factory "L's" will not be permitted. Conduit to meet local codes.

10. General Contractor to provide access to hoods at area above hoods for mounting of hood supports. If access is not provided, General Contractor to provide hood supports.
    All roof curb & jacks to be provided, located & installed by G.C., including resealing of roof & roof penetrations.

11. General Contractor to provide sprinkler heads in walk-in boxes and adequately protected against freezing.

12. Removal of window glass, window frames, doors, door frames and center post for entry of equipment shall be the responsibility of the General Contractor and at no expense to K.E.C. if necessary.

13. General Contractor to provide all wall backing per location and specification by K.E.C.

14. All dimensions shown are measured from finished walls, floors, ceilings and/or column to center lines of stubs or outlets. Allowances shall be made for miscellaneous obstructions, structures, venting, electrical, plumbing and thickness of finishes when framing and/or roughing-in as required.

15. When equipment is noted as existing or by vendor, utility requirements should match as indicated on the manufacturer's data plate. If existing equipment is not relocated, reconnect as required by code.

16. Where indicated to connect in or through valve compartment, contractor shall stub-up into valve compartment at height indicated on rough-in plan, cap their work and make final connections after equipment is in place.

17. General Contractor to provide all duct chases from hood thru roof, sized & constructed, conforming to codes.

18. General Contractor to provide waste container at job site for K.E.C.

19. Slope floors to floor drains.

20. Provide door wall openings and or passages to assure access for all kitchen equipment and front end items. Coordinate sizes with K.E.C.

21. Provide walk-in refrigerator/freezer depressions, to detail.

22. G.C. to provide enclosures from top of walk-in to ceiling (if required).

23 G.C. to provide enclosures from top of exhaust hood to ceiling (if required).

24. Provide coved base-molding or coved integral floor materials as required at all vertical surfaces for kitchen floors.

VENTILATION NOTES

1. Mechanical Contractor to provide fans, duct work, (all welding of hood and duct required) controls, duct collar, final connection, hanging of hoods, permits and make-up air equipment. The above furnished by H.V.A.C. contractor unless noted on drawing or contracted with K.E.C.

2. Mechanical contractor (H.V.A.C.) to balance exhaust system.

3. All duct collars, cutouts and penetrations in hoods to be located and provided by Mechanical Contractor in field.

REFRIGERATION CONTRACTORS NOTES

1. Refrigeration line to be installed and protected from damage.
   Refrigeration lines for walk-in refrigerators & freezers, to run overhead and drop down from compressors to evaporators.

2. All built-in walk-in refrigeration boxes shall be complete with insulation with proper vapor barrier and interior lights and switches outside. Electrical connection and mounting by E.C.

3. Do Not Scale. Use written dimensions shown on "K" plans.

FIRE PROTECTION SYSTEM NOTES

1. Where indicated on drawings a dry or liquid chemical system shall be provided to protect all cooking exhaust hoods, ducts, and cooking appliances against fire and re-flash by a fire control system. The size and number of systems shall be in conformance with N.F.P.A Pamphlet 96, and local and state codes. The system shall be installed by authorized installers.

2. The system shall be of the cartridge operated type, automatic actuated or be manually operable at the nozzle release and a remote manual pull operator shall be located as shown on the drawing. Actuation of the system shall provide automatic gas and/or electric fuel line cut-off.

3. Electrically controlled or manually controlled gas solenoid valve shall be installed by the plumbing contractor. The electrical contractor shall furnish and install line voltage wiring and conduit from cut-off relay to solenoid valve and connect cut-off relay and solenoid valve as required.

4. Electrical cooking equipment shall be shutoff at the electrical panel by means of shunt trips. Electrical contractor shall furnish and install shunt trips, line voltage wiring and conduit from fir protection micro-switch, or equivalent, to panels, to meet all local codes.

5. All hand held fire extinguishers to be provided by General Contractor.

MASONRY CONTRACTORS NOTES

1. All curbs & or recessed mat area dimensions are finished dimensions. Verify face and top finishes (where curb is exposed) with Architect, General Contractor or Owner.

2. All curb heights to be taken from finished floor to top of finished curb.

3. All curb dimensions are taken from finished wall to face of finished curb, or from finished face of curb to finished face of curb.

4. Provide a 3" – 4" radius cove where finished face of curb intersects the finished floor.

5. See Plumbing plan(s) for exact location of floor sinks and floor drains. Verify with P.C.

6. Do Not Scale, Use written dimensions shown on "K" plans.

7. Provide masonry curbs with trowel-smooth and level finish as required.

PLUMBING CONTRACTOR NOTES

1. All rough-ins related to foodservice equipment only. Please see architectural/engineering plans for additional plumbing requirements and codes.

2. Final connections to all equipment to be by plumbing contractor, ALL required materials, such as stops, valves, filters, check valves, pressure reducing valves, gate valves, solenoid valves, syphon breakers, piping, tubing, misc. fittings, traps, etc. shall be supplied by the Plumbing Contractor unless otherwise specified.

3. Water quality requirement. The recommended minimum water quality standards whether untreated or pre-treated, based upon 10 hours of use per day, and a daily blow-down, are as follows:

A.	Total dissolved solids	less than 300 parts per million
B.	Total alkalinity	less than 85 parts per million
C.	Silica	less than 13 parts per million
D.	pH Factor	greater than 7.5

4. Verify all plumbing rough-ins and location with owner, vendor or G.C. on existing equipment or other equipment not provided by K.E.C.

5. Plumbing Contractor to Furnish and Install the following as per code:

   A. All water, waste, gas, and steam service to point of rough-in as shown on plan. Rough-in outlets to stub 4" out of walls at height indicated from finished floor to center line of outlet.
   B. Pressure reducing and/or regulating valves for dishwashers, booster heaters, and as otherwise noted, in kitchen areas.
   C. All floor sinks, complete with top grates, and removable sediment buckets set flush with finished floor, unless noted or as per local code.
   D. All waste lines, direct or indirect, except as noted, shall be pitched downward. All waste lines shall have adequate clean-out provisions.
   E. Indirect waste lines for walk-in refrigerators/freezers, pitched 4"/12" (minimum) and with a "P" trap at end over floor sink as required by local code.
   F. Heater tape, with 35 watts per lineal foot of drain line, and insulation of all drain lines inside freezer compartments.
   G. Install in an accessible location the fire control gas shutoff valve as supplied by Fire Protection System Supplier. (If gas cooking equipment is used).
   H. Vacuum breakers as required.
   I. Insulation of all steam, hot water and condensate lines in kitchen.
   J. Clean-out valves for steam condensate, and air lines.
   K. All piping condensate & drain lines, to and from equipment must be kept a minimum of (6") above finished floor to allow for cleaning, & or prevailing local code.
   L. In line water filters are recommended for the following equipment: (Water filter by P.C. unless otherwise noted)

      Water Heaters
      Booster Heaters
      Sink Heaters
      Dish Washers
      Glass Washers
      Soda Systems
      Ice Machines
      Steam Equipment

6. Plumbing Contractor to interconnect dish machine with booster heater and water-type ventilators with control panels as per manufacturer's instruction, when applicable and noted.

7. All lines routed through equipment shall not interfere with intended use of, or servicing of equipment.

8. All vent pipes are to be concealed in walls or column chases.

9. Interconnection between steam equipment and steam generator.

10. Grease trap to be specified and located by mechanical engineer and provided and installed by mechanical or plumbing contractor.

11. Where equipment is noted as existing, utility requirements should be verified and match as indicated on manufacturer's date plate. If equipment is not relocated, reconnect as required by code. Plumbing Contractor to verify existing utilities and equipment requirements and re-use if possible.

12. All plumbing locations are shown at optimum spots. Utilize all existing services where applicable.

13. All plumbing to be concealed within walls where possible.

14. Hot water heater to provide a minimum of 140 degree water to all kitchen equipment.

15. All dimensions shown are measured from finished walls, floors ceilings and/or column to center lines of stubs or outlets. The plumbing contractor shall make allowances for miscellaneous obstructions such as piping mains, electrical components, structures, venting and thickness of finishes when roughing-in as required.

16. All faucets and/or disposers located on Food Service Plan shall be provided by K.E.C. and installed by Plumbing Contractor, unless otherwise noted.

17. Hand sinks are to be mounted and installed by Plumbing Contractor.

ELECTRICAL CONTRACTOR NOTES

1. The electrical specifications and connections shown on these plans are for food service equipment requirements only. It is the responsibility of the ELECTRICAL CONTRACTOR to consult the architect's, mechanical engineers and/or general contractor's plans and the owner for further building electrical requirements.

2. Access areas and cut-ins on custom and buyout equipment and fixtures shall be provided by the K.E.C. as required for proper installation of electrical outlets, junction boxes, home runs, etc. The electrical contractor shall provide and install shields and extension boxes as required.

3. The Electrical Contractor shall connect all compressors and provide fused disconnects, magnetic starters and thermo overload protection as required.

4. Vapor proof light fixtures for exhaust hoods shall be furnished by the HOOD SUPPLIER. The Electrical Contractor shall supply and install pull boxes,conduit, wire, bulbs, etc. Provide and connect to a wall mounted switch (with pilot light) located per plans.

5. Vapor proof light fixtures for walk-in coolers and freezers shall be furnished with an exterior pilot light switch by the Walk-in Supplier. It shall be the responsibility of the Electrical Contractor to interconnect and install these items as required. Electrical Contractor shall connect door heaters, relief ports. E.C. to supply install, & connect all drain line heater tape.

6. Electrical Contractor to interconnect the Remote Refrigerations' Compressor, Evaporator, T-stat, Solenoid and Defrost Timer (All Controls) where required.

7. All electrical materials including wiring, flex, conduit, switches, disconnects, magnetic starters, thermo-overload protectors, transformers, electrical panels, cords, plugs, receptacles, bulbs, etc. shall be supplied by the electrical contractor unless specified in these plans or in writing by the Food Service Equipment Contractor.

8. It shall be the responsibility of the Electrical Contractor to provide water proof power outlet(s) on the roof for exhaust system fan(s) make-up air fan(s) and refrigeration system(s) as required. Low voltage (or common voltage) wiring shall also be supplied and installed by the electrical contractor when necessary to control and interconnect the above systems.

9. The electrical contractor shall furnish and install any and all electrical contractors as required by applicable codes and ordinances.

10. All dimensions shown on these plans are measured from finished walls, floors, ceilings and/or column center lines or grid lines to enter lines of outlets and pull boxes. The Electrical Contractor shall make allowances for finishes when roughing-in as required.

11. The Electrical Contractor shall provide and install element contractor (relay) shutoffs (shunt trip) and/or solenoid shutoff valve and interconnect with the fire suppression system for the cooking equipment, to shut off all equipment automatically in case of fire. Verify with local codes for shutdown of exhaust fan(s) and or make-up air fan(s) requirements.

12. All 115 volt convenience outlets not designated with specific loads are to be rated 20.0 amps. Electrical Contractor is to provide any additional outlets as called for by architect, owner and/or general contractor.

13. Electrical Contractor to provide caps and cords for all equipment where caps and cords are not standard with manufacture. Electrician to also shorten any cords supplied with equipment if requested to do so by owner or Food Service Equipment Contractors' representative.

14. Electrical Contractor to provide all rough-in building services and make final connections to all food service equipment provided by K.E.C. This shall include the installation mounting of the Air Curtain(s),/Microswitch(s).

15. Electrical Contractor to provide temporary power to Food Service Equipment Contractors' installers, as required.

16. All rough-ins are shown in optimum spots, utilize all existing services when applicable.

17. All receptacles and junction boxes to be flushed mounted in walls with stainless steel cover plate.

18. Verify all electrical rough-ins and locations with owner, vendor, or General Contractor on existing equipment or other equipment not provided by K.E.C.

19. Where applicable, Electrical Contractor to provide conduit wiring, install electrical components, and interwire, between the following:
    A. Control panels to ventilators and exhaust/supply fans per manufacture's instructions.
    B. Kitchen exhaust hood/ventilators to fire control system and hood controls.
    C. Call lights and waitress control systems.
    D. Light fixture, chandeliers, etc. Lamps for any light fixtures are to be provided and installed by the Electrical Contractor unless indicated on the lighting schedules or drawings.
    E. Module counters and components or equipment mounted on counters.
    F. Heat Lamps are to be connected thru remote controls, pilot lights, etc.

20. Electrical Contractor to provide and install all light bulbs for fixtures, where applicable.

21. All item's shown with P.I. connections, plug into receptacles furnished by the K.E.C. as part of the equipment.

22. Where connection is shown as J.B., Electrical Contractor shall connect to J.B. furnished as part of the equipment.

23. All horizontal dimensions are from face of finished wall to center-line of outlet or from center-line of outlet to center-line of outlet unless otherwise noted.

24. All symbols for outlet on walls are indicated at a specific height. Height of outlet is given from finished floor TO CENTERLINE OF OUTLET.

STAMP

DYRON MURPHY ARCHITECTS, P.C.
4505 Montbel Place NE, Albuquerque, New Mexico 87107

SHIPROCK PINNACLE HOTEL & RESTAURANT
SHIPROCK, NEW MEXICO
100% CONSTRUCTION DOCUMENTS
ISSUED FOR CONSTRUCTION
NOVEMBER 3, 2023

PROJECT NUMBER	DRAWN BY	PROJ MGR
2022.10	SK/DK	SK

FOODSERVICE GENERAL NOTES
Sheet Title

Sheet Number of
Q701

5/3/2023 1:23:21 PM C:\Revit Locals\Shiprock Pinnacle_Restaurant_rirvinT8K3N.rvt
DYRON MURPHY ARCHITECTS, P.C.

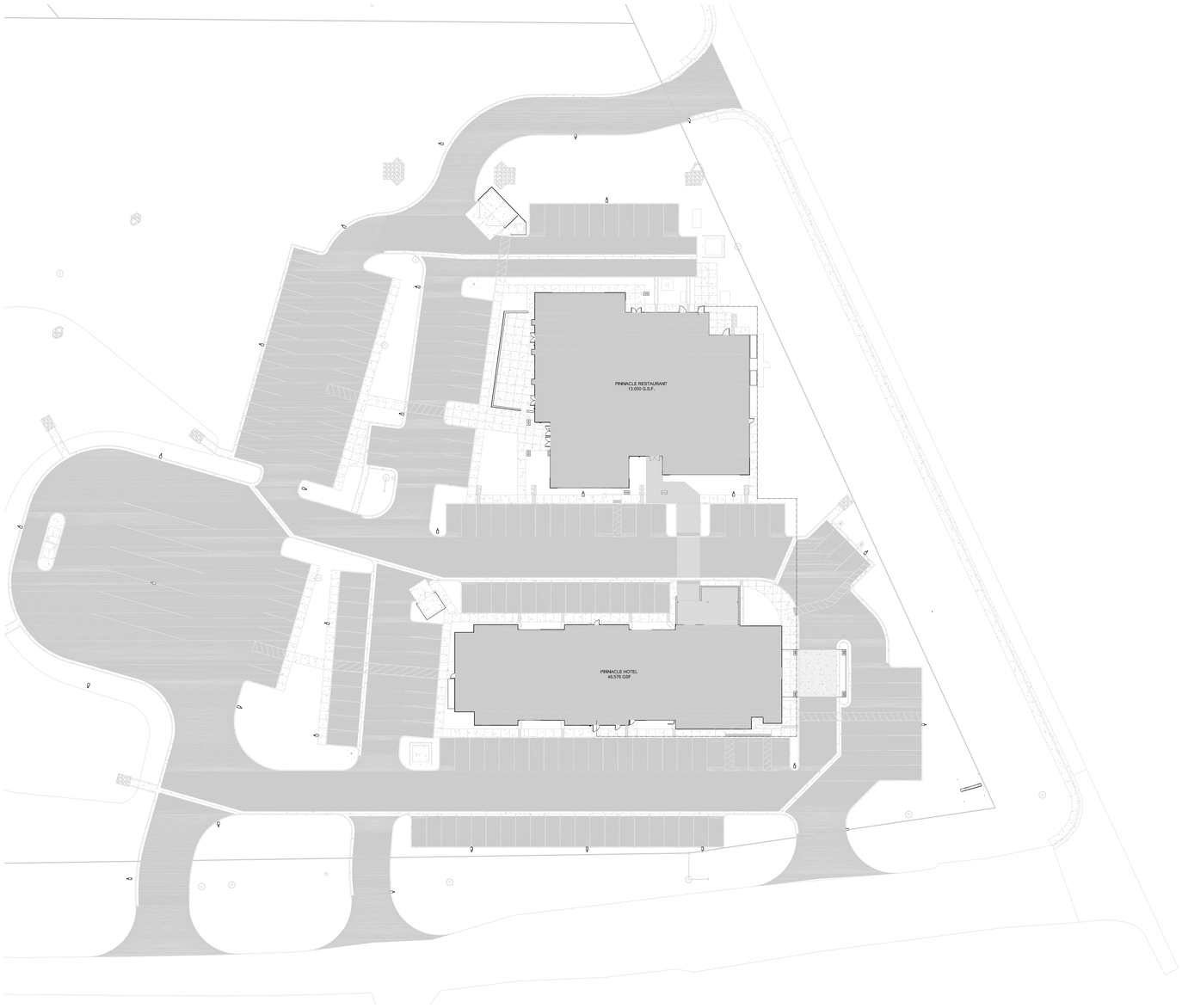

F1 **OVERALL SITE PLAN**
1/32" = 1'-0"

N

0 4' 8' 16'

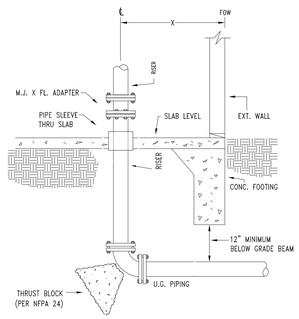

F2 **FIRE SERVICE ENTRY LINE DETAIL**
NTS

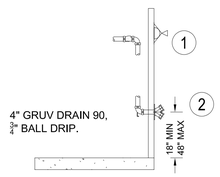

1. EXTERIOR HORN AND STROBE DEVICE IS PROVIDED BY OTHERS. ALL REQUIRED MOUNTING, MONITORING, WIRING AND SUPERVISION SHALL BE BY OTHERS. THE INSTALLING CONTRACTOR SHALL VERIFY THE FINAL LOCATION WITH THE LOCAL AUTHORITY PRIOR TO MOUNTING.

2. 4 x 2 1/2 x 2 1/2 FIRE DEPARTMENT CONNECTION. CONNECTION SHALL BE LOCATED FROM 18" MINIMUM TO 48" MAXIMUM ABOVE FINISH GRADE, w/ WALL PLATE LABELED "AUTO-SPKR", WITH CAPS AND CHAIN.

F3 **FIRE DEPARTMENT CONNECTION DETAIL**
NTS

CODE ANALYSIS

SPRINKLER SYSTEM TYPE: WET
IBC - 2018
IFC - 2018
NFPA 13 - 2016
NFPA 13R - 2016
NFPA 20 - 2016

FIRE DEPARTMENT - SHIPROCK FIRE DEPARTMENT

FIRE PROTECTION SYSTEM SCOPE OF WORK:

FIRE SPRINKLER PROJECT SCOPE NARRATIVE
THE SCOPE OF THIS PROJECT IS TO PROVIDE A WET PIPE SPRINKLER AND STANDPIPE SYSTEM FOR A HOTEL AND RESTAURANT.

THE NEW SYSTEM WILL HAVE SPRINKLERS AT THE CEILING LEVEL. REFER TO ARCHITECTURAL SECTIONS AND STRUCTURAL DRAWINGS FOR ANY AREAS REQUIRING ABOVE CEILING AND/OR INTERSTITIAL PROTECTION. REFER TO ARCHITECTURAL FOR CEILING TYPE.

NEW SPRINKLER RISER IS A 6" FEED AND WILL BE LOCATED IN FIRE RISER ROOM 129.

ALL OFFICES, BATHROOMS AND COMMON AREAS WILL BE CLASSIFIED AS LIGHT HAZARD OCCUPANCIES. ALL ELECTRICAL, MECHANICAL, STORAGE ROOMS, AND JANITOR CLOSETS WILL BE CLASSIFIED AS ORDINARY HAZARD GROUP I.

DESIGN CRITERIA PER NFPA 13 2016 ED. FOR RESTAURANT, NFPA 13R FOR HOTEL, 2018 I-CODES AND AHJ REQUIREMENTS.

QUICK RESPONSE SPRINKLER HEADS SHALL BE USED FOR ALL AREAS PER NFPA 13.
SPRINKLER SPACING REQUIREMENTS PER TABLE 8.6.2.2.1(A)
- MAX SPACING PENDANTS = 225 SQ. FT.
- MAX SPACING ABOVE CEILING UPRIGHTS = PER TABLE 8.6.2.2.1(A)
- MAX SPACING UPRIGHTS (LIGHT HAZARD) = 225 SQ. FT.
- MAX SPACING SIDEWALL = PER TABLE 8.7.2.2.1
- MAX SPACING UPRIGHTS (ORDINARY HAZARD) = 130 SQ. FT.

SYSTEMS ARE LIMITED TO 52,000 SQ. FT. PER NFPA 13 8.2.1.

EXTENDED COVERAGE HEADS MAY BE USED IF HYDRAULIC CALCULATIONS PROVE WATER SUPPLY IS ADEQUATE.

GENERAL NOTES

1. ALL WORK SHALL COMPLY WITH ALL APPLICABLE FEDERAL, STATE, AND LOCAL CODES, LAWS, ACTS, ORDINANCES, AND ALL AUTHORITIES HAVING JURISDICTION.
2. THIS CONTRACTOR SHALL BE RESPONSIBLE FOR ALL ASPECTS OF JOBSITE SAFETY; THE ENGINEER ASSUME NO RESPONSIBILITY OR RISK FOR MEANS AND METHODS USED BY THE CONTRACTOR FOR INSTALLING WORK DEPICTED ON THESE PLANS.
3. COORDINATE PIPING AND SPRINKLER INSTALLATION WITH THE BUILDING ELEMENTS AND OTHER TRADES. ALL PIPING SHALL BE CONCEALED UNLESS APPROVED BY THE PROJECT ARCHITECT.
4. THIS CONTRACTOR'S WORK SHALL CONSIST OF THE INSTALLATION OF AN AUTOMATIC FIRE SPRINKLER SYSTEM IN ACCORDANCE WITH NFPA 13 REQUIREMENTS.
5. THE FIRE PROTECTION CONTRACTOR'S WORK SHALL BEGIN AT 6" SPIGOT INSIDE THE HOTEL. CONNECTION WILL BE PIPED INTO BUILDING WITH A FLANGE SPIGOT AND SHALL BE TWO HOLED AND LEVEL. THIS FLANGE SPIGOT SHALL BE PROVIDED BY UNDERGROUND CONTRACTOR. UNDERGROUND TEST CERTIFICATES SHALL BE PROVIDED BY THE CONTRACTOR BEFORE CONNECTION IS MADE.
6. FIRE PUMP WILL SUPPLY BOTH BUILDINGS. UNDERGROUND CONTRACTOR WILL SUPPLY 4" FEED IN BETWEEN HOTEL AND RESTAURANT.
7. PROVIDE TEST CONNECTION FOR FULL FORWARD FLOW TEST OF BACKFLOW PREVENTER AT SYSTEM DEMAND.
8. MAXIMUM STORAGE HEIGHT SHALL NOT EXCEED 12'-0".
9. CONTRACTOR SHALL CONDUCT A WATER FLOW TEST PRIOR TO DESIGN TO SHOW DESIGN TEAM.
10. ENSURE ALL SYSTEM DRAINS ARE DRAINED TO EXTERIOR OR A SANITARY DRAIN, IF APPROVED BY OWNER.

VERITAS FIRE ENGINEERING, INC.
12364 W Alameda Pkwy, Suite 135, Lakewood, CO 80228

STAMP

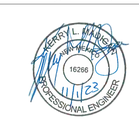

DYRON MURPHY ARCHITECTS, P.C.
4505 Montbel Place NE, Albuquerque, New Mexico 87107

SHIPROCK PINNACLE HOTEL & RESTAURANT

SHIPROCK, NEW MEXICO

100% CONSTRUCTION DOCUMENTS

ISSUED FOR CONSTRUCTION

NOVEMBER 3, 2023

PROJECT NUMBER	DRAWN BY	PROJ MGR
2022.10	Author KLM	Designer BG

Sheet Title
FIRE PROTECTION NOTES

Sheet Number 1 of 8
F100

DYRON MURPHY ARCHITECTS, P.C.

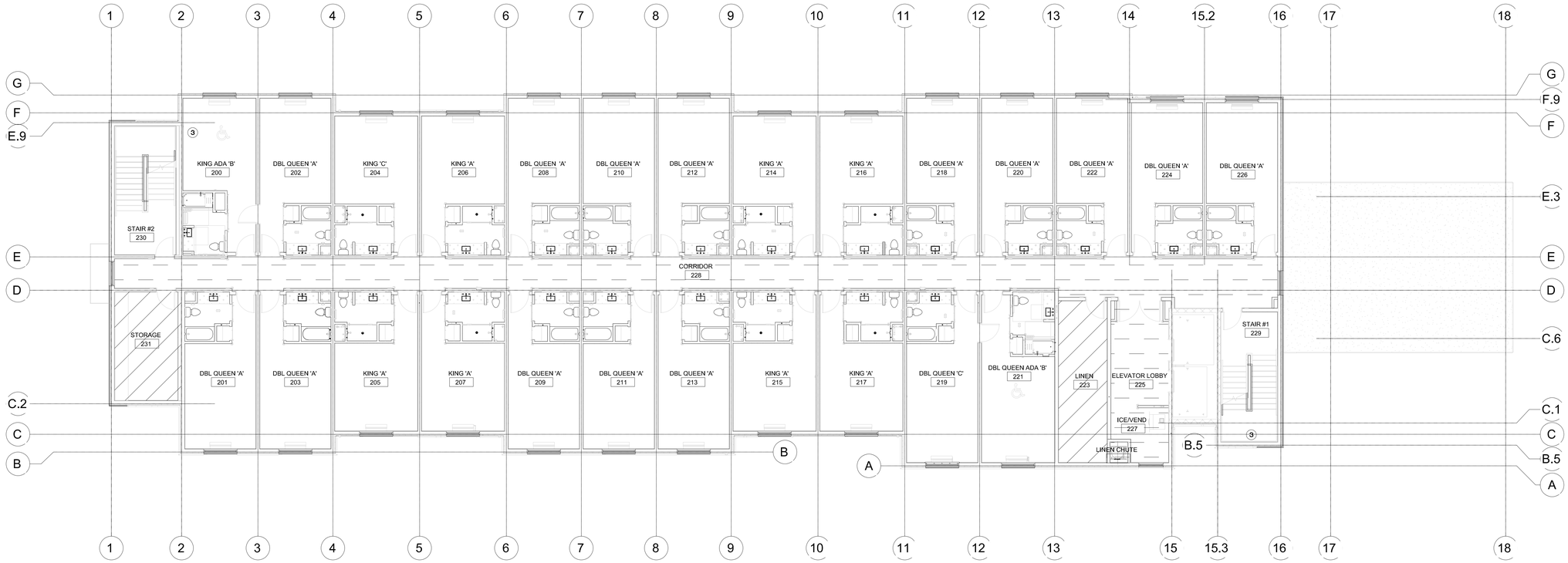

F2 **SECOND FLOOR FIRE PROTECTION PLAN**
1/8" = 1'-0" 11,940 GSF

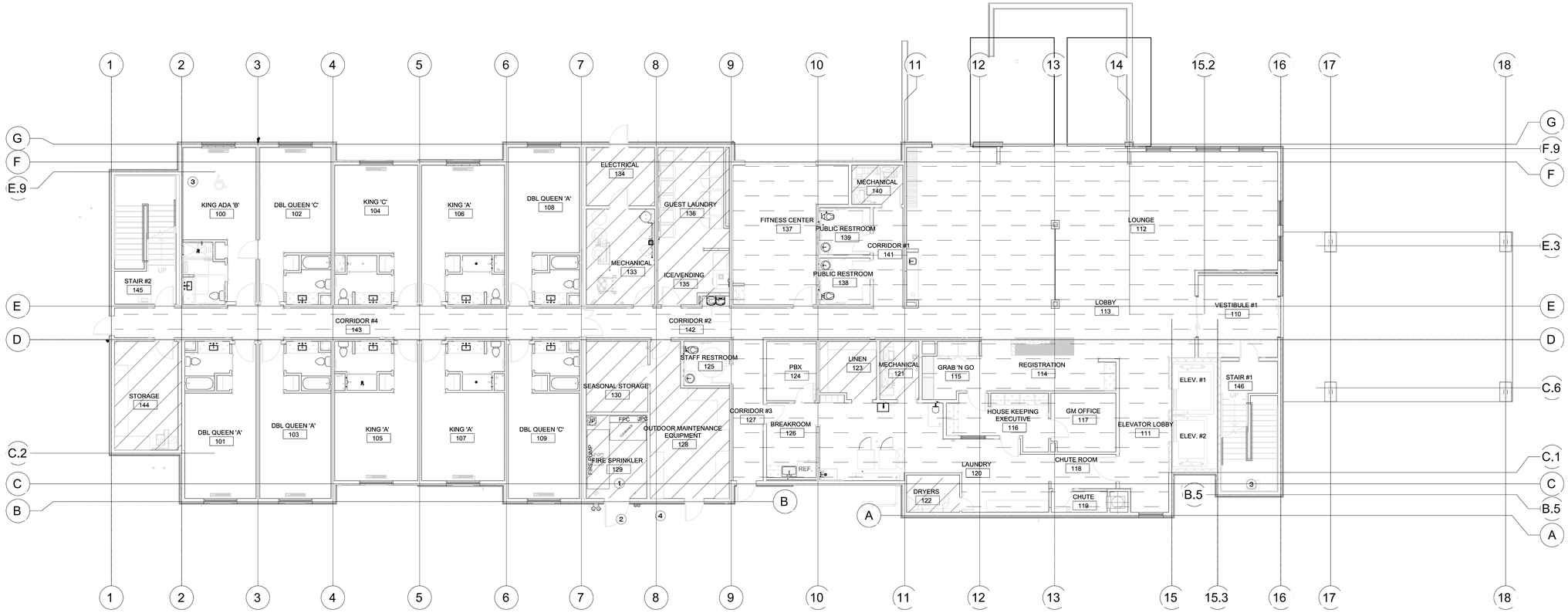

F1 **FIRST FLOOR FIRE PROTECTION PLAN**
1/8" = 1'-0" 11,940 GSF

ORDINARY GROUP 1
HAZARD
.15 GPM / 1500 SQ. FT
250 GPM HOSE
WET PIPE SYSTEM

RESIDENTIAL
.05 GPM / PER
COMPARTMENT
WET PIPE SYSTEM

LIGHT HAZARD
.10 GPM / 1500 SQ. FT
100 GPM HOSE
WET PIPE SYSTEM

F3 **SPRINKLER HAZARD LEGEND**
NTS

- CONCRETE PAD
- BF BACKFLOW PREVENTER
- JP JOCKEY PUMP
- JPC JOCKEY PUMP CONTROLLER
- FPC FIRE PUMP CONTROLLER
- FIRE DEPARTMENT CONNECTION
- FIRE PUMP TEST HEADER

F4 **FIRE PUMP LEGEND**
NTS

KEYED NOTES

1. FIRE RISER LOCATION
2. FIRE DEPARTMENT CONNECTION
3. STAND PIPE LOCATION
4. FIRE PUMP TEST HEADER

VERITAS FIRE ENGINEERING, INC.
12364 W Alameda Pkwy, Suite 135, Lakewood, CO 80228

STAMP

DYRON MURPHY ARCHITECTS, P.C.
4505 Montbel Place NE, Albuquerque, New Mexico 87107

SHIPROCK PINNACLE HOTEL & RESTAURANT

SHIPROCK, NEW MEXICO

100% CONSTRUCTION DOCUMENTS

ISSUED FOR CONSTRUCTION

NOVEMBER 3, 2023

PROJECT NUMBER 2022.10	DRAWN BY BG Author KLM	PROJ MGR BG Designer BG

Sheet Title: **FIRST & SECOND FLOOR HOTEL FIRE PROTECTION PLAN**

Sheet Number: 2 of 8

F101

DYRON MURPHY ARCHITECTS, P.C.

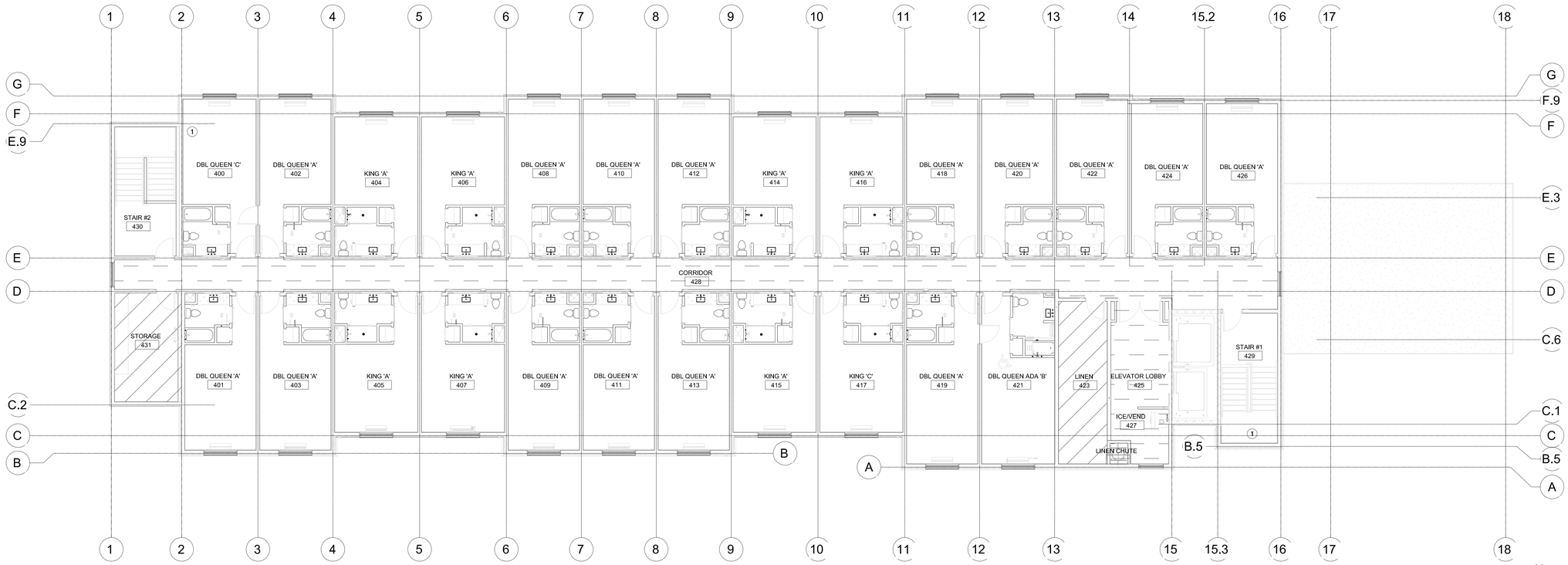

F2 **FOURTH FLOOR FIRE PROTECTION PLAN**
1/8" = 1'-0" 11,940 GSF

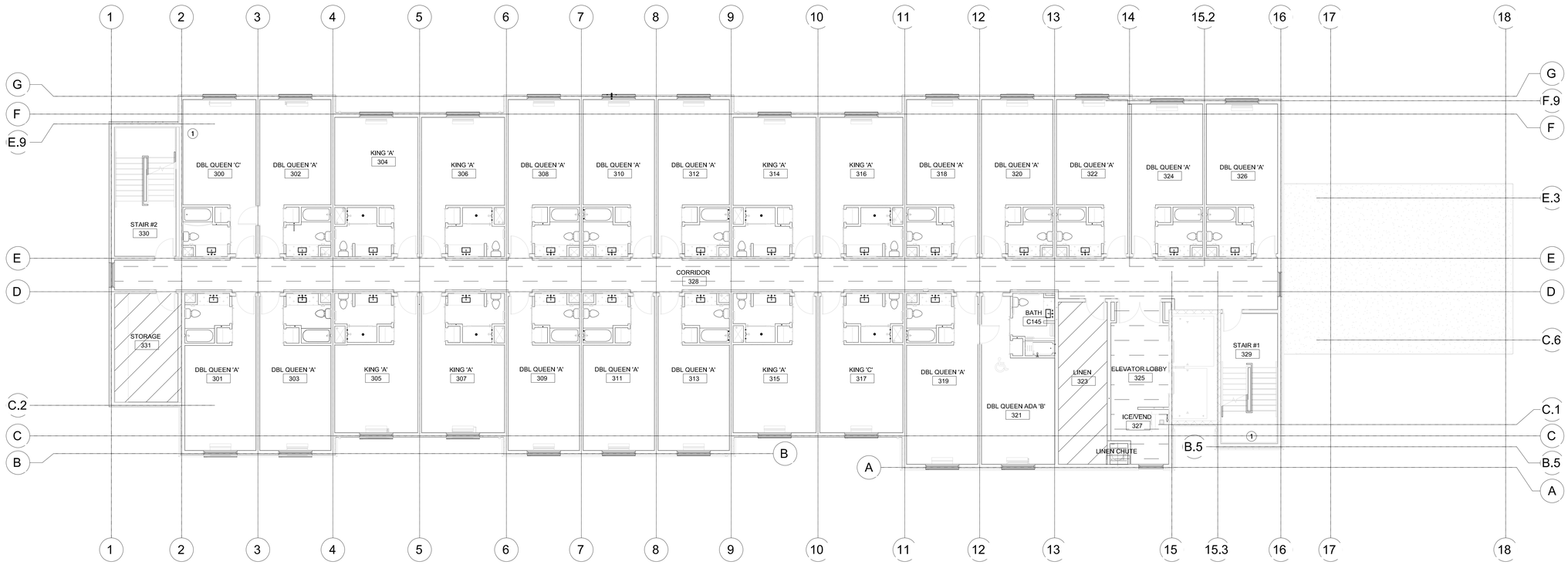

F1 **THIRD FLOOR FIRE PROTECTION PLAN**
1/8" = 1'-0" 11,940 GSF

ORDINARY GROUP 1 HAZARD
.15 GPM / 1500 SQ. FT
250 GPM HOSE
WET PIPE SYSTEM

RESIDENTIAL
.05 GPM / PER COMPARTMENT
WET PIPE SYSTEM

LIGHT HAZARD
.10 GPM / 1500 SQ. FT
100 GPM HOSE
WET PIPE SYSTEM

F3 **SPRINKLER HAZARD LEGEND**
NTS

KEYED NOTES

1 STAND PIPE LOCATION

VERITAS FIRE ENGINEERING, INC.
12364 W Alameda Pkwy, Suite 135, Lakewood, CO 80228

DYRON MURPHY ARCHITECTS, P.C.
4505 Montbel Place NE, Albuquerque, New Mexico 87107

STAMP

SHIPROCK PINNACLE HOTEL & RESTAURANT
SHIPROCK, NEW MEXICO
100% CONSTRUCTION DOCUMENTS
ISSUED FOR CONSTRUCTION
NOVEMBER 3, 2023

PROJECT NUMBER 2022.10	DRAWN BY BG Author KLM	PROJ MGR BG Designer BG

THIRD & FOURTH FLOOR HOTEL FIRE PROTECTION PLAN
Sheet Title

Sheet Number 3 of 8

F102

DYRON MURPHY ARCHITECTS, P.C.

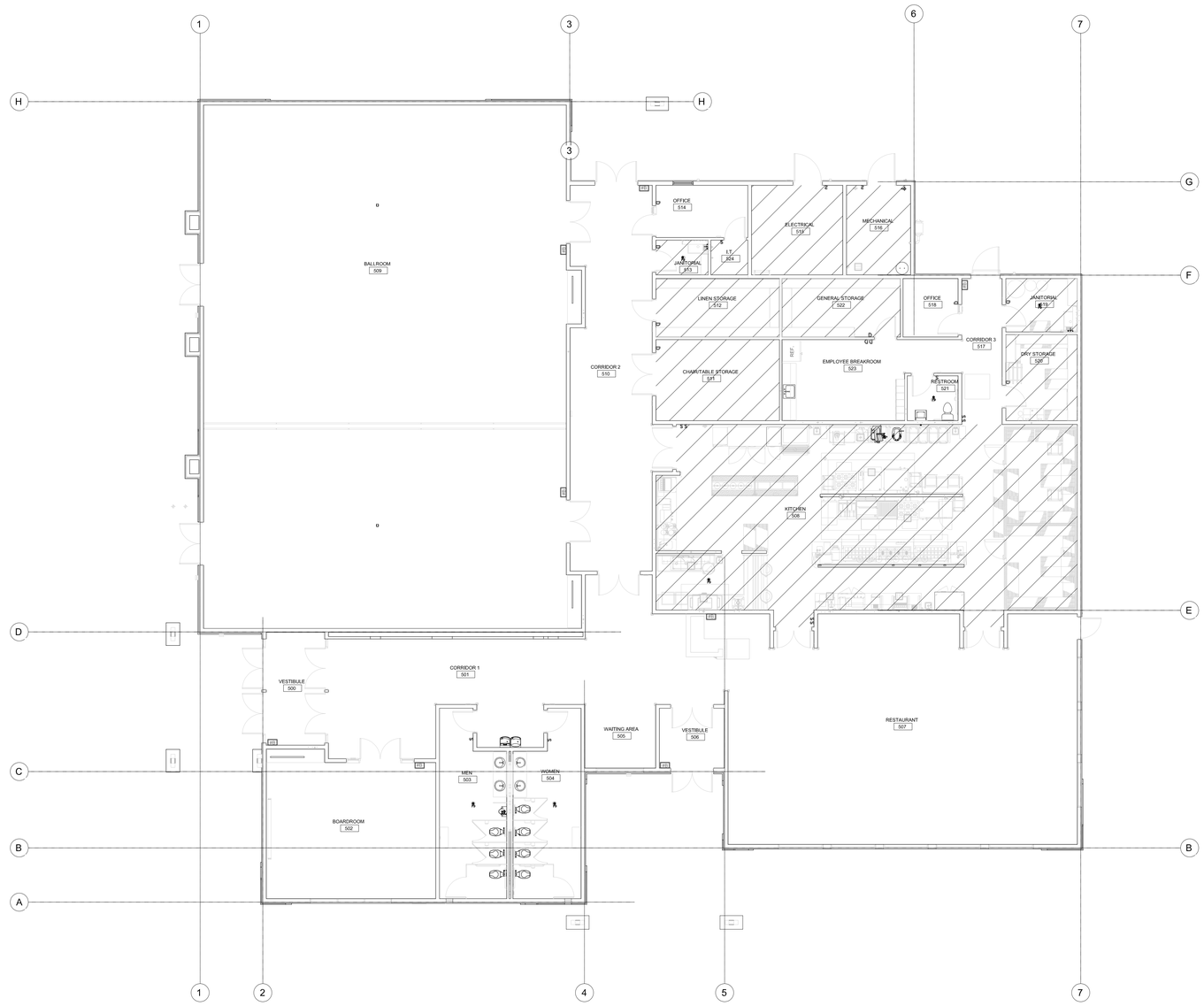

F1 **RESTAURANT FIRE PROTECTION PLAN**
1/8" = 1'-0" 12,997 GSF

0 4' 8' 16'

N

LIGHT HAZARD
.10 GPM / 1500 SQ. FT
100 GPM HOSE
WET PIPE SYSTEM

ORDINARY GROUP 1
HAZARD
.15 GPM / 1500 SQ. FT
250 GPM HOSE
WET PIPE SYSTEM

F2 **SPRINKLER HAZARD LEGEND**
NTS

VERITAS
FIRE ENGINEERING, INC.
12364 W Alameda Pkwy, Suite 135, Lakewood, CO 80228

STAMP

DYRON MURPHY ARCHITECTS, P.C.
4505 Montbel Place NE, Albuquerque, New Mexico 87107

SHIPROCK PINNACLE HOTEL & RESTAURANT

SHIPROCK, NEW MEXICO

100% CONSTRUCTION DOCUMENTS

ISSUED FOR CONSTRUCTION

NOVEMBER 3, 2023

PROJECT NUMBER 2022.10	DRAWN BY BG	PROJ MGR BG
	Author KLM	Designer BG

Sheet Title
RESTAURANT FIRE PROTECTION PLAN

Sheet Number 4 of 8

F103

DYRON MURPHY ARCHITECTS, P.C.

FIRE ALARM SYSTEM SUBMITTAL

FIRE ALARM PROJECT SCOPE
THE PURPOSE OF THIS PROJECT IS TO PROVIDE A FIRE ALARM SYSTEM FOR A RESTAURANT AND HOTEL.

CODE ANALYSIS

NUMBER OF STORIES:	4
ALARM SYSTEM TYPE:	ADDRESSABLE
SPRINKLER SYSTEM TYPE:	WET
NFPA 70	2017
NFPA 72	2016
INTERNATIONAL BUILDING CODES	2018

FIRE DEPARTMENT
SHIPROCK FIRE DEPARTMENT

System Inputs

Control Panel Annunciation								Notification		Safety Controls			
Actuate Alarm Audible Signal Indicator on Annunciator	Actuate Alarm Visual Indicator on Annunciator	Actuate Supervisory Alarm Signal Indicator on Annunciator	Actuate Supervisory Alarm Visual Indicator on Annunciator	Actuate Trouble Alarm Audible Sounder on Annunciator	Actuate Trouble Alarm Visual Indicator on Annunciator	Actuate Zone Visual Indicator on Annunciator	Silence Horns	Transmit Alarm Signal to Main Fire Alarm Panel	Transmit Supervisory Signal Signal to Main Fire Alarm Panel	Transmit Trouble Signal Signal to Main Fire Alarm Panel	Release Secured Doors		
X	X					X		X			X		1 Smoke Detector
X	X					X		X			X		2 Heat Detector
X	X					X		X			X		3 Water Flow Switch
		X	X			X			X				4 Sprinkler Tamper Switch
X	X							X					5 Kitchen Hood
		X	X			X				X			6 Fire Pump Running
		X	X			X				X			7 Phase Reversal
		X	X			X				X			8 Power Loss
				X	X					X			9 Ground Fault
				X	X					X			10 Open Circuit
				X	X					X			11 Notification Appliance Short Circuit
				X	X					X			12 Low Battery
				X	X					X			13 AC Power Failure (1 Hour Delay)
							X						14 SILENCE

F2 SEQUENCE OF OPERATION
NTS

GENERAL NOTES:

1. ALL WORK SHALL COMPLY WITH ALL APPLICABLE FEDERAL, STATE, AND LOCAL CODES, LAWS, ACTS, ORDINANCES, AND ALL AUTHORITIES HAVING JURISDICTION.
2. THIS CONTRACTOR SHALL BE RESPONSIBLE FOR ALL ASPECTS OF JOBSITE SAFETY; THE ENGINEER ASSUME NO RESPONSIBILITY OR RISK FOR MEANS AND METHODS USED BY THE CONTRACTOR FOR INSTALLING WORK DEPICTED ON THESE PLANS.
3. COORDINATE WIRING AND WIRING INSTALLATION WITH THE BUILDING ELEMENTS AND OTHER TRADES. ALL DEVICES AND NOTIFICATIONS SHALL BE GRID CEILING MOUNTED UNLESS OPEN TO STRUCTURE, AND/OR APPROVED BY THE PROJECT ARCHITECT.
4. THIS CONTRACTOR'S WORK SHALL CONSISTS OF THE INSTALLATION OF AN AUTOMATIC FIRE SPRINKLER SYSTEM IN ACCORDANCE WITH NFPA 72 REQUIREMENTS.
5. THESE FIRE ALARM LAYOUTS ARE CONCEPTUAL/ DIAGRAMMATIC. FIRE ALARM CONTRACTOR TO VERIFY THE FEASIBILITY AND ACCURACY OF THE FIRE ALARM SYSTEM SHOWN, IN ORDER TO IMPLEMENT.

FACP	FIRE ALARM CONTROL PANEL
ANN	ANNUNCIATOR PANEL
P	SMOKE DETECTOR (PHOTOELECTRIC)
	HORN/ STROBE
	STROBE
F	PULL STATION
KH	KITCHEN HOOD
WF	WATERFLOW SWITCH
TS	VALVE WITH TAMPER SWITCH
WP	HORN WITH STROBE WEATHER PROOF
	FIRE DEPARTMENT CONNECTION

F1 FIRE ALARM LEGEND
NTS

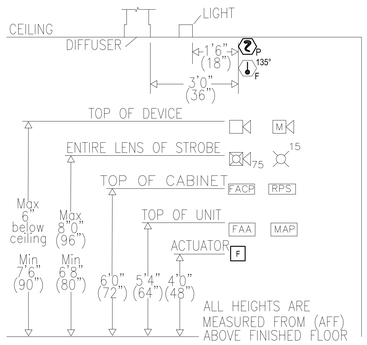

F3 DEVICE MOUNTING HEIGHT
NTS

VERITAS FIRE ENGINEERING, INC.
12364 W Alameda Pkwy, Suite 135, Lakewood, CO 80228

STAMP

DYRON MURPHY ARCHITECTS, P.C.
4505 Montbel Place NE, Albuquerque, New Mexico 87107

SHIPROCK PINNACLE HOTEL & RESTAURANT

SHIPROCK, NEW MEXICO

100% CONSTRUCTION DOCUMENTS

ISSUED FOR CONSTRUCTION

NOVEMBER 3, 2023

PROJECT NUMBER 2022.10	DRAWN BY BG Author KLM	PROJ MGR BG Designer BG

FIRE ALARM NOTES

Sheet Title

Sheet Number 5 of 8

F200

DYRON MURPHY ARCHITECTS, P.C.

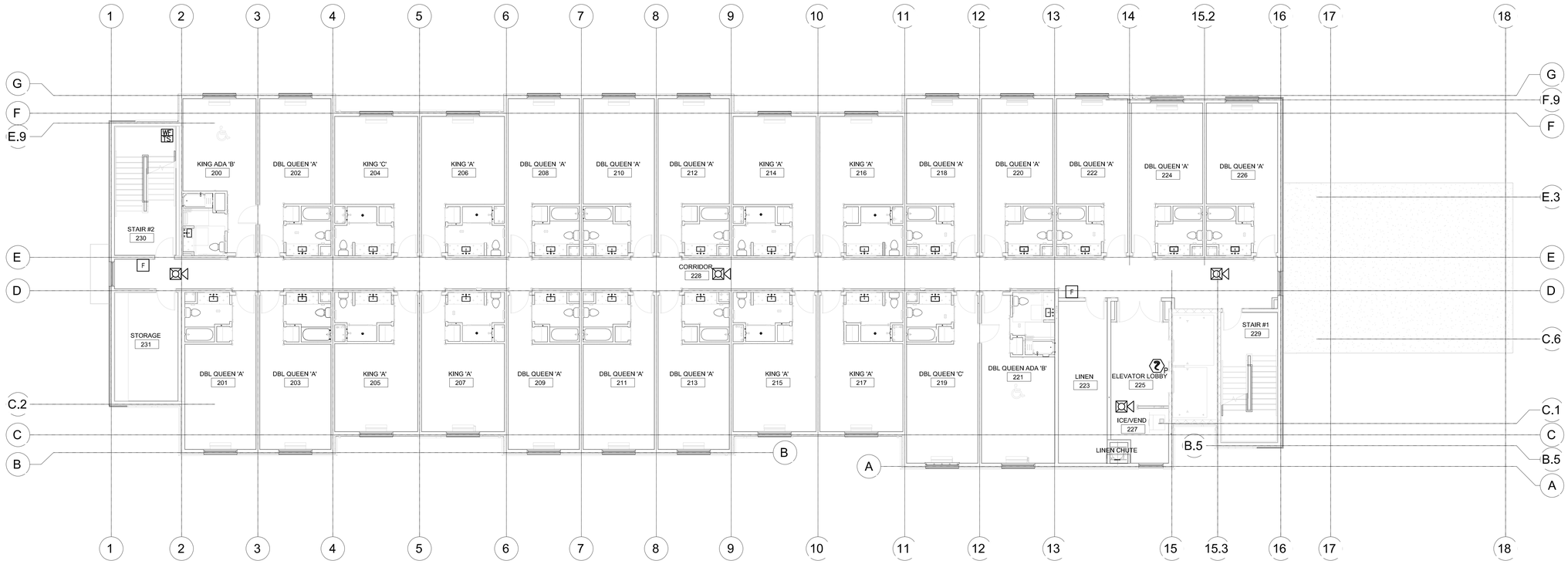

F2 **SECOND FLOOR FIRE ALARM PLAN**
1/8" = 1'-0" 11,940 GSF

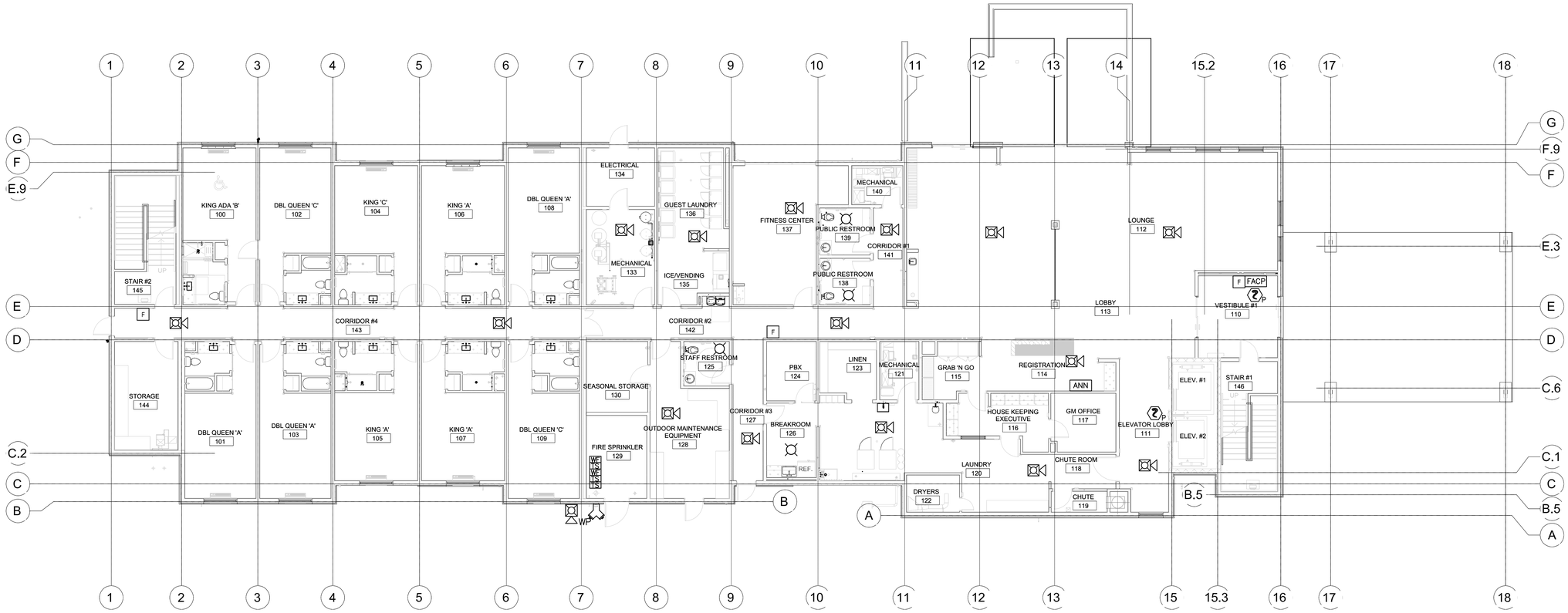

F1 **FIRST FLOOR FIRE ALARM PLAN**
1/8" = 1'-0" 11,940 GSF

VERITAS FIRE ENGINEERING, INC.
12364 W Alameda Pkwy, Suite 135, Lakewood, CO 80228

STAMP

DYRON MURPHY ARCHITECTS, P.C.
4505 Montbel Place NE, Albuquerque, New Mexico 87107

SHIPROCK PINNACLE HOTEL & RESTAURANT

SHIPROCK, NEW MEXICO

100% CONSTRUCTION DOCUMENTS

ISSUED FOR CONSTRUCTION

NOVEMBER 3, 2023

PROJECT NUMBER	DRAWN BY BG	PROJ MGR BG
2022.10	Author KLM	Designer BG

Sheet Title

FIRST & SECOND FLOOR HOTEL FIRE ALARM PLAN

Sheet Number 6 of 8

F201

DYRON MURPHY ARCHITECTS P.C.

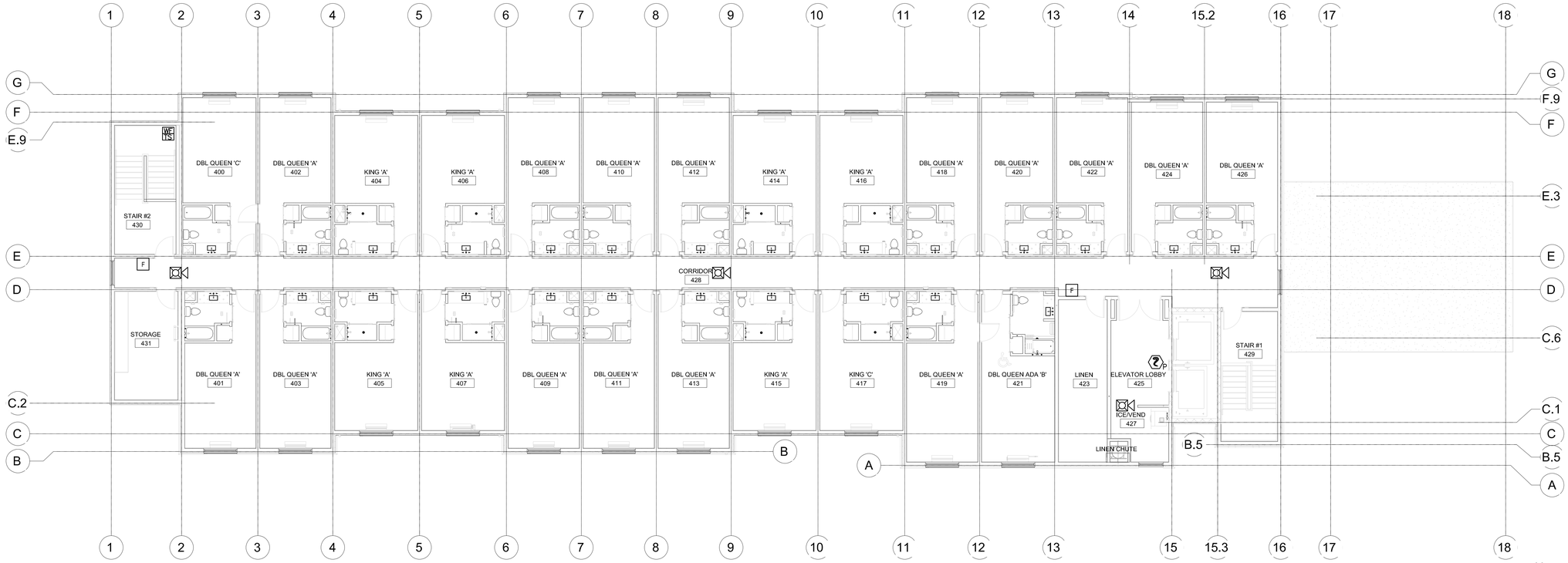

F2 **FOURTH FLOOR FIRE ALARM PLAN**
1/8" = 1'-0" 11,940 GSF

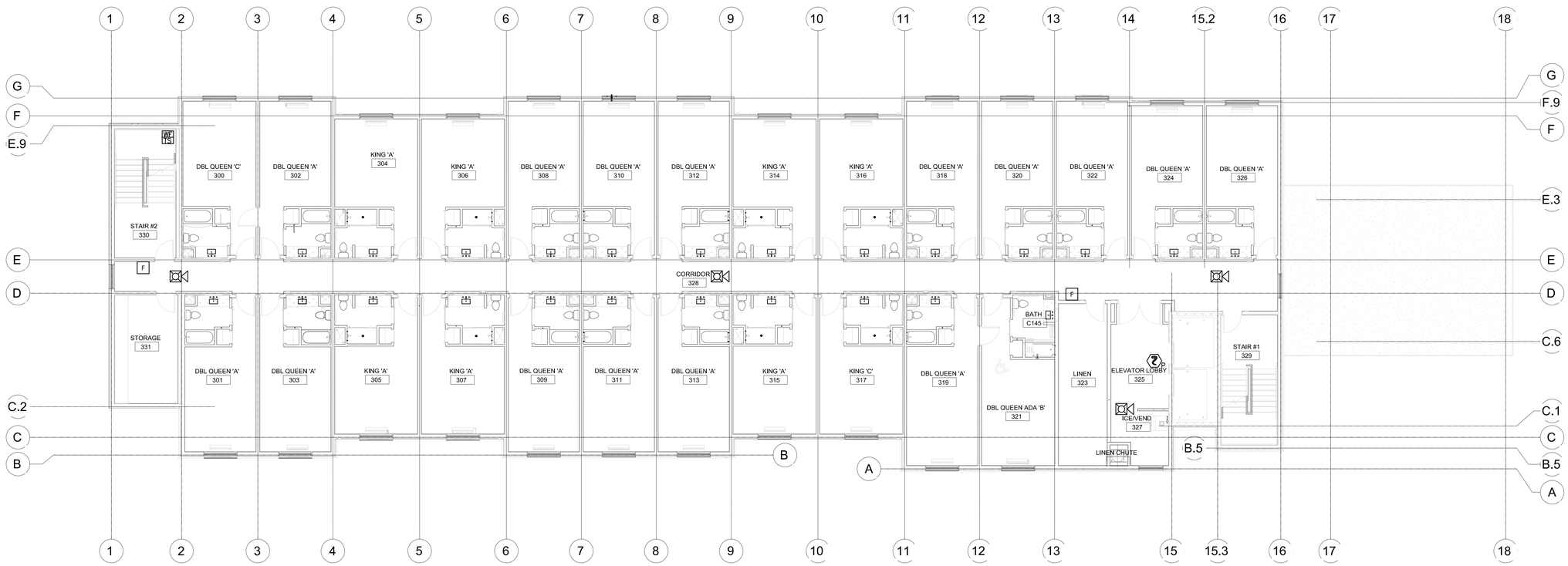

F1 **THIRD FLOOR FIRE ALARM PLAN**
1/8" = 1'-0" 11,940 GSF

VERITAS FIRE ENGINEERING, INC.
12364 W Alameda Pkwy, Suite 135, Lakewood, CO 80228

STAMP

DYRON MURPHY ARCHITECTS, P.C.
4505 Montbel Place NE, Albuquerque, New Mexico 87107

SHIPROCK PINNACLE HOTEL & RESTAURANT

SHIPROCK, NEW MEXICO

100% CONSTRUCTION DOCUMENTS

ISSUED FOR CONSTRUCTION

NOVEMBER 3, 2023

PROJECT NUMBER 2022.10	DRAWN BY BG Author KLM	PROJ MGR BG Designer BG

THIRD & FOURTH FLOOR HOTEL FIRE ALARM PLAN

Sheet Title

Sheet Number 7 of 8

F202

DYRON MURPHY ARCHITECTS, P.C.

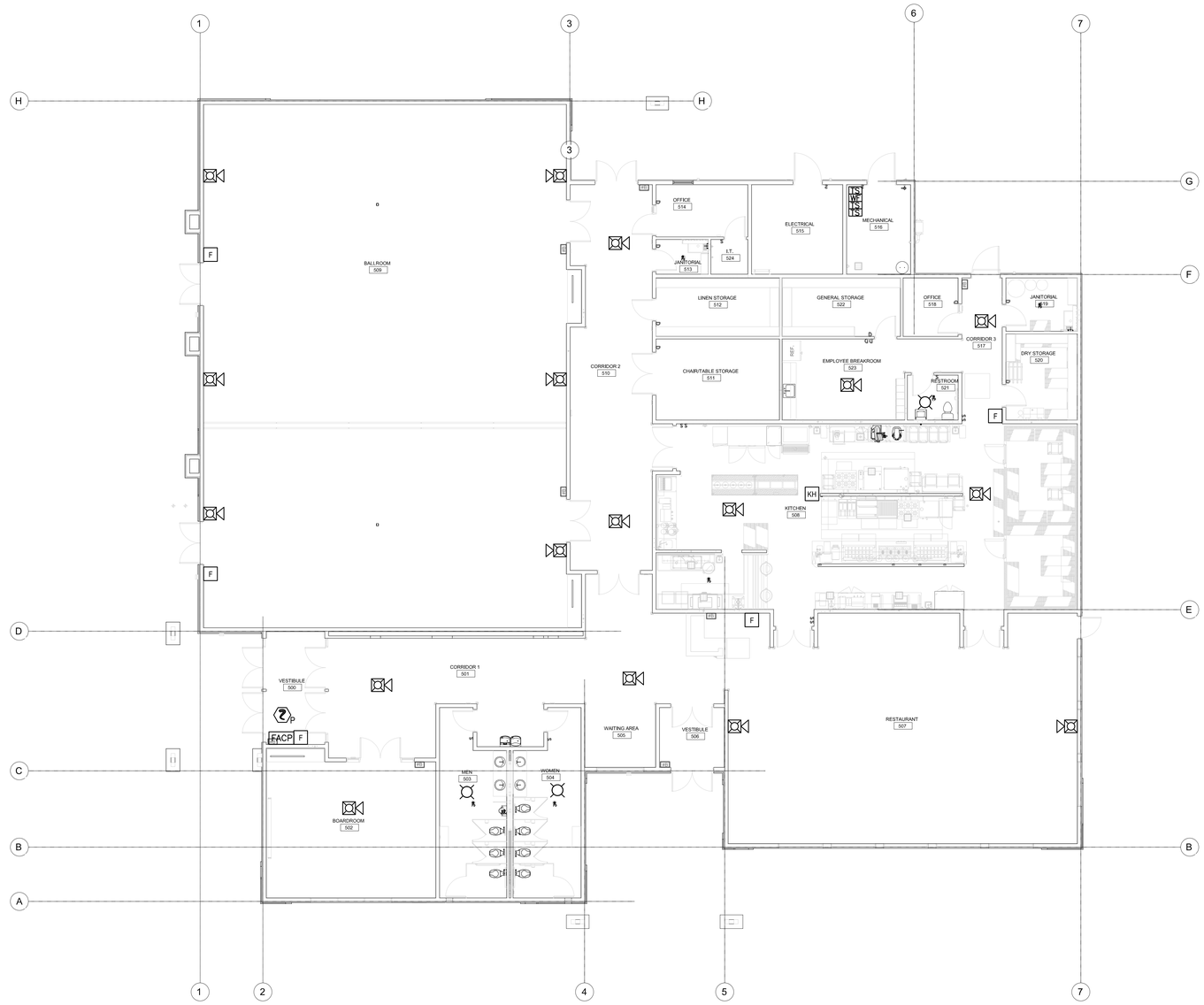

F1 **RESTAURANT FIRE PROTECTION PLAN**
1/8" = 1'-0" 12,997 GSF

0 4' 8' 16'

N

VERITAS
FIRE ENGINEERING, INC.
12364 W Alameda Pkwy, Suite 135, Lakewood, CO 80228

STAMP

DYRON MURPHY ARCHITECTS, P.C.
4505 Montbel Place NE, Albuquerque, New Mexico 87107

SHIPROCK PINNACLE HOTEL & RESTAURANT

SHIPROCK, NEW MEXICO

100% CONSTRUCTION DOCUMENTS

ISSUED FOR CONSTRUCTION

NOVEMBER 3, 2023

PROJECT NUMBER	DRAWN BY BG	PROJ MGR BG
2022.10	Author KLM	Designer BG

RESTAURANT FIRE ALARM PLAN

Sheet Title

Sheet Number 8 of 8

F203

DYRON MURPHY ARCHITECTS, P.C.

VIEW KEY

NAME — LEVEL NAME
10'-0" — HEIGHT ABOVE PROJECT 0'-0"

1 — INDICATES NOTE USED TO DESCRIBE ADDITIONAL INFORMATION ABOUT WORK REQUIRED, SPECIFIC TO THE SHEET AND/OR DETAIL

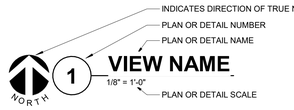

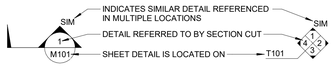

LINE TYPE AND TAG KEY:

NEW WORK BY THIS CONTRACTOR (WIDE LINE)
- NEW
- EXISTING TO BE REMOVED (SHORT DASHED PATTERN)
- NEW UNDERFLOOR OR UNDERGROUND (LONG DASHED PATTERN)

EXISTING TO REMAIN OR WORK BY OTHERS (NARROW LINE)
- EXISTING
- EXISTING TO BE REMOVED BY OTHERS (SHORT DASHED PATTERN)
- EXISTING UNDERFLOOR OR UNDERGROUND (LONG DASHED PATTERN)

HALFTONING DOES NOT MODIFY SCOPE.

'TAG'-E — TAGS WITH DASH 'E' INDICATES THE REFERENCED OBJECT IS EXISTING

TAG — UNDERLINED TAG INDICATES OBJECT IS IN-SCOPE. IF NEW, ADDITIONAL INFORMATION IS AVAILABLE IN A SCHEDULE, MATERIAL LIST, OR SYMBOL LIST

INDICATES AN EXISTING SYSTEM'S POINT OF CONNECTION/REMOVAL

APPLICABLE CODES

CONTRACTOR SHALL COMPLY WITH APPLICABLE CODES AND LOCAL AMENDMENTS INCLUDING, BUT NOT LIMITED TO, THE FOLLOWING:

BUILDING CODE:	2015 NEW MEXICO COMMERCIAL BUILDING CODE (NMCBC)
MECHANICAL CODE:	2021 NEW MEXICO MECHANICAL CODE
PLUMBING CODE:	2021 NEW MEXICO PLUMBING CODE
FIRE CODE:	2018 INTERNATIONAL FIRE CODE (IFC)
ENERGY CODE:	2018 INTERNATIONAL ENERGY CONSERVATION CODE (IECC)
ELECTRIC CODE:	2017 NEW MEXICO ELECTRIC CODE
FUEL GAS CODE:	2018 INTERNATIONAL FUEL GAS CODE (IFGC)

PLUMBING SYMBOL LIST

NOT ALL SYMBOLS MAY APPLY.

SYMBOL:	DESCRIPTION:
—AV—	ACID VENT
—AW—	ACID WASTE
—CA—	COMPRESSED AIR
—CW—	COLD WATER - POTABLE
—D—	DRAIN
—DI—	DEIONIZED WATER
—DT—	DRAIN TILE
—FOR—	FUEL OIL RETURN
—FOS—	FUEL OIL SUPPLY
—G—	NATURAL GAS
—GRV—	GAS REGULATOR VENT
—GSAN—	SANITARY DRAINAGE (GREASE SANITARY DRAINAGE)
—GV—	GREASE VENT
—HW—	HOT WATER - POTABLE
—HWC—	HOT WATER CIRCULATING - POTABLE
—HW140—	HOT WATER - POTABLE NUMBER INDICATES TEMP
—HWC140—	HOT WATER CIRC. - POTABLE NUMBER INDICATES TEMP
—IA—	INSTRUMENT AIR
—MA—	MEDICAL AIR
—MPG—	MEDIUM PRESSURE GAS
—MV—	MEDICAL VACUUM
—N—	NITROGEN
—NCW—	NON-POTABLE COLD WATER
—NHW—	NON-POTABLE HOT WATER
—NO—	NITROUS OXIDE
—O—	OXYGEN
—P—	PROPANE GAS
—PD—	PUMPED DISCHARGE
—PW—	PURE WATER
—RO—	REVERSE OSMOSIS WATER
—SAN—	SANITARY DRAINAGE
—SCW—	SOFT COLD WATER
—SHW—	SOFT HOT WATER
—ST(1,000)—	STORM DRAINAGE (ROOF SQUARE FOOTAGE)
—STS—	STORM DRAINAGE (SECONDARY)
—STW—	SOFT TEMPERED WATER
—TW—	TEMPERED WATER
—V—	VENT
—VAC—	LAB VACUUM
—W—	SERVICE WATER - POTABLE
—WAGD—	WASTE ANETHESIA GAS DISPOSAL
	PIPE CONTINUATION
	PIPE CAP
	PIPE DOWN
	PIPE UP OR UP/DOWN
FD	PIPE SERVING FIXTURE ON FLOOR ABOVE (EXAMPLE: FD = FLOOR DRAIN)
	PITCH PIPE IN DIRECTION
	DIRECTION OF FLOW IN PIPE
	ROUTE TO DRAIN
RD-1 6"(1000)	ROOF DRAIN PROPERTIES — SYMBOL; SIZE (ROOF SQ. FT.)
	DIELECTRIC CONNECTION
	UNION/FLANGE
	SHUTOFF VALVE NORMALLY OPEN
	SHUTOFF VALVE NORMALLY CLOSED
GPM	BALANCING VALVE (NUMBER INDICATES GPM)
	CHECK VALVE
	BACKFLOW PREVENTER
	SOLENOID VALVE
	SAFETY/RELIEF VALVE
	VACUUM BREAKER
P	PRESSURE GAUGE (FURNISHED WITH BALL VALVE)
P	PRESSURE SENSOR (FURNISHED WITH BALL VALVE)
T	TEMPERATURE SENSOR WITH WELL
T	THERMOMETER WITH WELL (DIAL TYPE)
T	THERMOMETER WITH WELL (FILLED TYPE)
	REDUCER - REFERENCE SPECIFICATION FOR CONCENTRIC/ECCENTRIC AND FOT/FOB
	PRESSURE REDUCING VALVE (LIQUID/GAS)
	PUMP
M	METER
	ALIGNMENT GUIDE
	PIPE ANCHOR
EJ-# (#.#")	EXPANSION JOINT #.#" IS THE EXPANSION TRAVEL INCHES
	AIR ADMITTANCE VALVE

PLUMBING ABBREVIATION KEY

ABBR:	DESCRIPTION:
AD	ACCESS DOOR
AFF	ABOVE FINISHED FLOOR
BFP	BACKFLOW PREVENTER
BT	BATHTUB
CB	CATCH BASIN
CI	CAST IRON
CO	CLEANOUT
CS	CLINICAL SINK
DB	DIALYSIS BOX
DF	DRINKING FOUNTAIN
DI	DUCTILE IRON
E	EXISTING
EE	EMERGENCY EYEWASH
ES	EMERGENCY SHOWER
ESE	EMERGENCY SHOWER/EYEWASH
EWC	ELECTRIC WATER COOLER
FCO	FLOOR CLEANOUT
FD	FLOOR DRAIN
FM	FLOW METER
FS	FLOOR SINK
GD	GARBAGE DISPOSER
GI	GREASE INTERCEPTOR
HB	HOSE BIBB
I.E.	INVERT ELEVATION (FOR REFERENCE ONLY)
LAV	LAVATORY
MB	MOP BASIN
MH	MANHOLE
MV	MIXING VALVE
NIC	NOT IN CONTRACT
NT	NEUTRALIZATION TANK
OS	OIL SEPARATOR
RD	ROOF DRAIN
SCCR	SHORT CIRCUIT CURRENT RATING
SH	SHOWER
SK	SINK
SS	SERVICE SINK
TD	TRENCH DRAIN
TP	TRAP PRIMER
TYP	TYPICAL
UR	URINAL
VTR	VENT THROUGH ROOF
WC	WATER CLOSET
WCO	WALL CLEANOUT
WF	WASH FOUNTAIN
WH	WATER HEATER
WMF	WASHING MACHINE FIXTURE
WM	WATER METER
WS	WATER SOFTENER
UB	UTILITY BOX
UON	UNLESS OTHERWISE NOTED
YCO	YARD CLEANOUT

PLUMBING GENERAL NOTES:

1. THE SYMBOLS AND THE MATERIAL LIST ARE FOR THE CONVENIENCE OF THE CONTRACTOR. CONTRACTOR SHALL VERIFY QUANTITIES AND FURNISH ALL MATERIALS REQUIRED FOR FULLY OPERATIONAL SYSTEMS, WHETHER SPECIFIED OR NOT.
2. CATALOG NUMBERS SHALL NOT BE CONSIDERED COMPLETE, BUT ARE GIVEN AS AN AID TO THE CONTRACTOR AND TO INDICATE THE QUALITY REQUIRED. CONTRACTOR IS RESPONSIBLE FOR A COMPLETE DESCRIPTION OF MATERIAL ON THESE DRAWINGS AND IN THE SPECIFICATIONS BEFORE ORDERING. THE DESCRIPTION OF THE MATERIAL TAKES PRECEDENCE OVER THE CATALOG NUMBER. THE FIRST MANUFACTURER LISTED IS THE BASIS OF DESIGN.
3. CONTRACTOR SHALL VERIFY THAT FIXTURES SUPPLIED ARE APPROVED PER ALL APPLICABLE STATE, LOCAL AND GOVERNING AUTHORITIES.
4. ALL FIXTURES SHALL CONFORM TO FEDERAL ACT S.3874
5. INVERT ELEVATIONS ARE FROM EXISTING DRAWINGS AND MAY NOT BE ACCURATE. VERIFY ALL ELEVATIONS BEFORE BEGINNING WORK.
6. VERIFY UNDERGROUND PIPE SIZES, INVERT ELEVATIONS, AND LOCATIONS PRIOR TO BEGINNING ANY WORK.
7. REFER TO THE PLUMBING ROUGH-IN SCHEDULE FOR THE SIZES OF BRANCH PIPES TO PLUMBING FIXTURES.
8. FOR CLARITY, NOT ALL VALVES HAVE BEEN SHOWN. PROVIDE SHUTOFF VALVES IN DOMESTIC WATER PIPING SERVING EACH ROOM WITH FIXTURES. ANGLE STOPS SHALL NOT BE CONSIDERED SHUTOFF VALVES.
9. EXISTING CONDITIONS ON DEMOLITION PLANS ARE PROVIDED TO INDICATE THE GENERAL SCOPE OF ITEMS TO BE REMOVED. REFER TO SPECIFICATION SECTION 22 05 05 FOR ADDITIONAL DEMOLITION INFORMATION.
10. P.C. SHALL CUT AND PATCH EXISTING AS REQUIRED FOR NEW OR DEMOLITION WORK UNLESS NOTED OTHERWISE. REFER TO SPECIFICATION SECTION 22 05 05 FOR ADDITIONAL INFORMATION.

PLUMBING SLOPE REQUIREMENTS:

NEW MEXICO PLUMBING CODE BASED ON: UPC-2021

INTERIOR:	
SANITARY WASTE:	≤2-1/2"ø=1/4" PER FOOT
	≥3"ø = 1/8" PER FOOT
	≥8"ø = 1/16" PER FOOT
GREASE WASTE:	1/4" PER FOOT
STORM (GRAVITY):	1/8" PER FOOT
CONDENSATE AND INDIRECT DRAINAGE:	1/8" PER FOOT
SANITARY AND GREASE VENT:	NO SPECIFIC PITCH, PITCH TO FIXTURES
DOMESTIC WATER:	NO SPECIFIC PITCH, PITCH TO FIXTURES

PLUMBING SHEET INDEX

P000	PLUMBING COVERSHEET
P101	PLUMBING WASTE & VENT PLANS
P102	THIRD & FOURTH FLOOR PLUMBING WASTE & VENT PLAN
P104	FIRST & SECOND FLOOR PLUMBING DOMESTIC WATER PLAN
P105	THIRD & FOURTH FLOOR PLUMBING DOMESTIC WATER PLAN
P106	PLUMBING WASTE & VENT - RESTAURANT
P107	PLUMBING DOMESTIC WATER - RESTAURANT
P112	PLUMBING ROOF PLAN - HOTEL
P113	PLUMBING ROOF PLAN - RESTAURANT
P401	PLUMBING ENLARGED PLANS
P402	PLUMBING ENLARGED PLANS
P403	PLUMBING ENLARGED PLANS
P500	PLUMBING DETAILS AND DIAGRAMS - RESTAURANT
P501	PLUMBING DETAILS
P502	PLUMBING DETAILS
P503	PLUMBING DIAGRAMS
P504	PLUMBING ISOMETRICS
P505	PLUMBING ISOMETRICS
P506	PLUMBING ISOMETRICS
P600	PLUMBING SCHEDULES
GRAND TOTAL: 20	

IMEG
9000 E PIMA CENTER PARKWAY
SUITE 320
SCOTTSDALE, AZ 85258
P: 480.222.3771
www.imegcorp.com

IMEG CORP. RESERVES PROPRIETARY RIGHTS, INCLUDING COPYRIGHTS, TO THIS DRAWING AND THE DATA SHOWN THEREON. SAID DRAWING AND/OR DATA ARE THE EXCLUSIVE PROPERTY OF IMEG CORP. AND SHALL NOT BE USED OR REPRODUCED FOR ANY OTHER PROJECT WITHOUT THE EXPRESS WRITTEN APPROVAL AND PARTICIPATION OF IMEG CORP. ©2023 IMEG CORP.

0 1 2 3
REF. SCALE IN INCHES — PROJECT #23002327.00

STAMP

11.03.2023

DYRON MURPHY ARCHITECTS, P.C.
4505 Montbel Place NE, Albuquerque, New Mexico 87107

SHIPROCK PINNACLE HOTEL & RESTAURANT

SHIPROCK, NEW MEXICO

100% CONSTRUCTION DOCUMENTS

ISSUED FOR CONSTRUCTION

NOVEMBER 3, 2023

PROJECT NUMBER	DRAWN BY	PROJ MGR
2022.10	IMEG	IMEG

PLUMBING COVERSHEET

Sheet Title

Sheet Number — of

P000

11/3/2023 12:42:55 PM Autodesk Docs://23002327.00 - Shiprock Pinnacle Hotel & Restaurant/MEP/2_23002327.00_Shiprock Pinnacle Hotel_C.rvt
DYRON MURPHY ARCHITECTS, P.C.

KEYNOTES: #

1. REFER TO CIVIL DRAWINGS FOR CONTINUATION OF UTILITIES.
2. WASTE PIPING ROUTED UNDERFLOOR.
3. WASTE STACK
4. VENT STACK
5. .

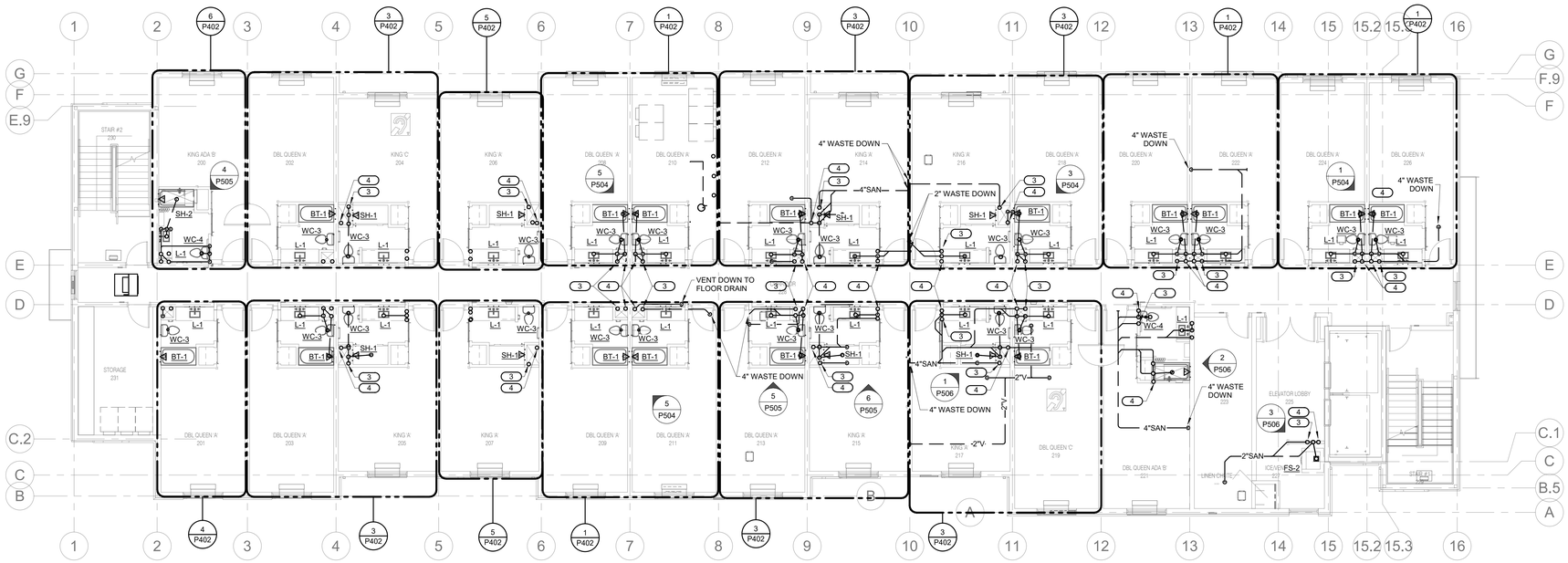

2 SECOND FLOOR PLUMBING WASTE & VENT PLAN

1/8" = 1'-0"

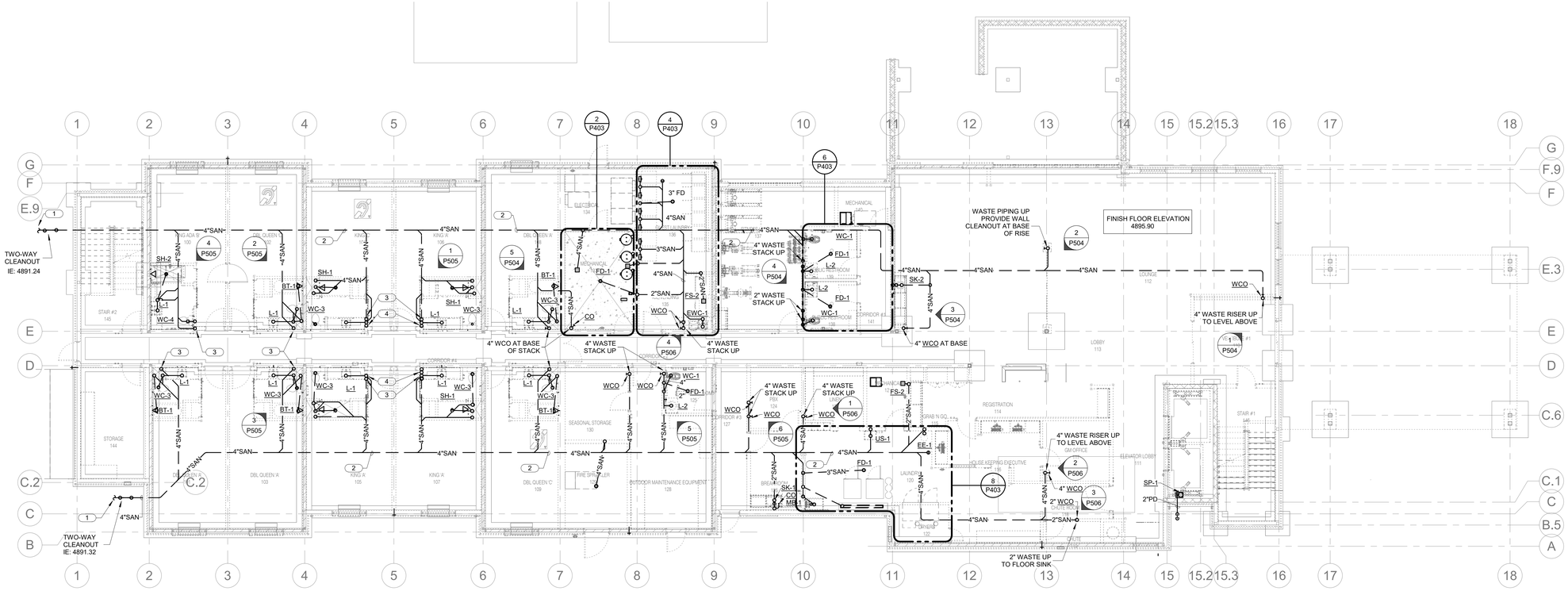

1 UNDERFLOOR PLUMBING PLAN - HOTEL

1/8" = 1'-0"

IMEG
9000 E PIMA CENTER PARKWAY
SUITE 320
SCOTTSDALE, AZ 85258
P: 480.222.3771
www.imegcorp.com

IMEG CORP. RESERVES PROPRIETARY RIGHTS, INCLUDING COPYRIGHTS, TO THIS DRAWING AND THE DATA SHOWN THEREON. SAID DRAWING AND/OR DATA ARE THE EXCLUSIVE PROPERTY OF IMEG CORP. AND SHALL NOT BE USED OR REPRODUCED FOR ANY OTHER PROJECT WITHOUT THE EXPRESS WRITTEN APPROVAL AND PARTICIPATION OF IMEG CORP. ©2023 IMEG CORP.

REF. SCALE IN INCHES — PROJECT #23002327.00

STAMP

BENJAMIN W. YEUNG — NEW MEXICO — LICENSED PROFESSIONAL ENGINEER

11.03.2023

DYRON MURPHY ARCHITECTS, P.C.

4505 Montbel Place NE, Albuquerque, New Mexico 87107

SHIPROCK PINNACLE HOTEL & RESTAURANT

SHIPROCK, NEW MEXICO

100% CONSTRUCTION DOCUMENTS

ISSUED FOR CONSTRUCTION

NOVEMBER 3, 2023

PROJECT NUMBER	DRAWN BY	PROJ MGR
2022.10	IMEG	IMEG

PLUMBING WASTE & VENT PLANS

Sheet Title

Sheet Number — of

P101

11/3/2023 12:43:11 PM Autodesk Docs://23002327.00 - Shiprock Pinnacle Hotel & Restaurant/MEP/2_23002327.00_Shiprock Pinnacle Hotel_C.rvt
DYRON MURPHY ARCHITECTS, P.C.

KEYNOTES: #

1. WASTE STACK .
2. VENT STACK.
3. .

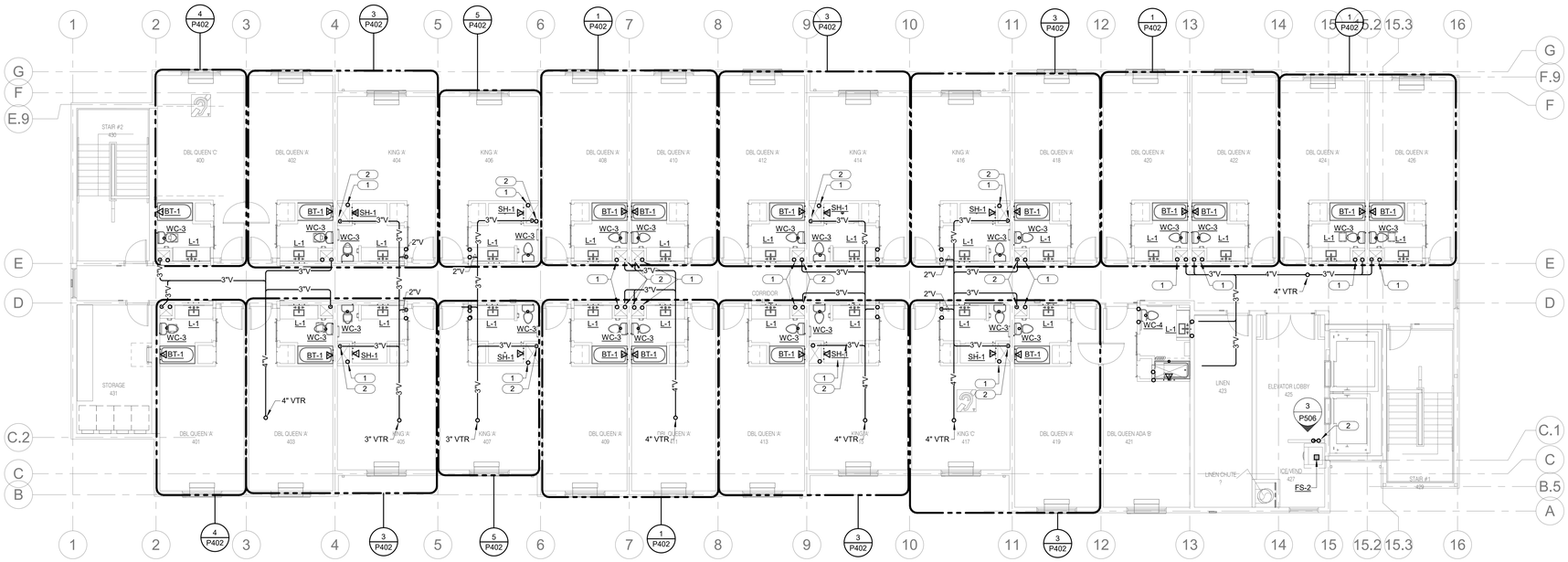

2 FOURTH FLOOR PLUMBING WASTE & VENT PLAN

1/8" = 1'-0"

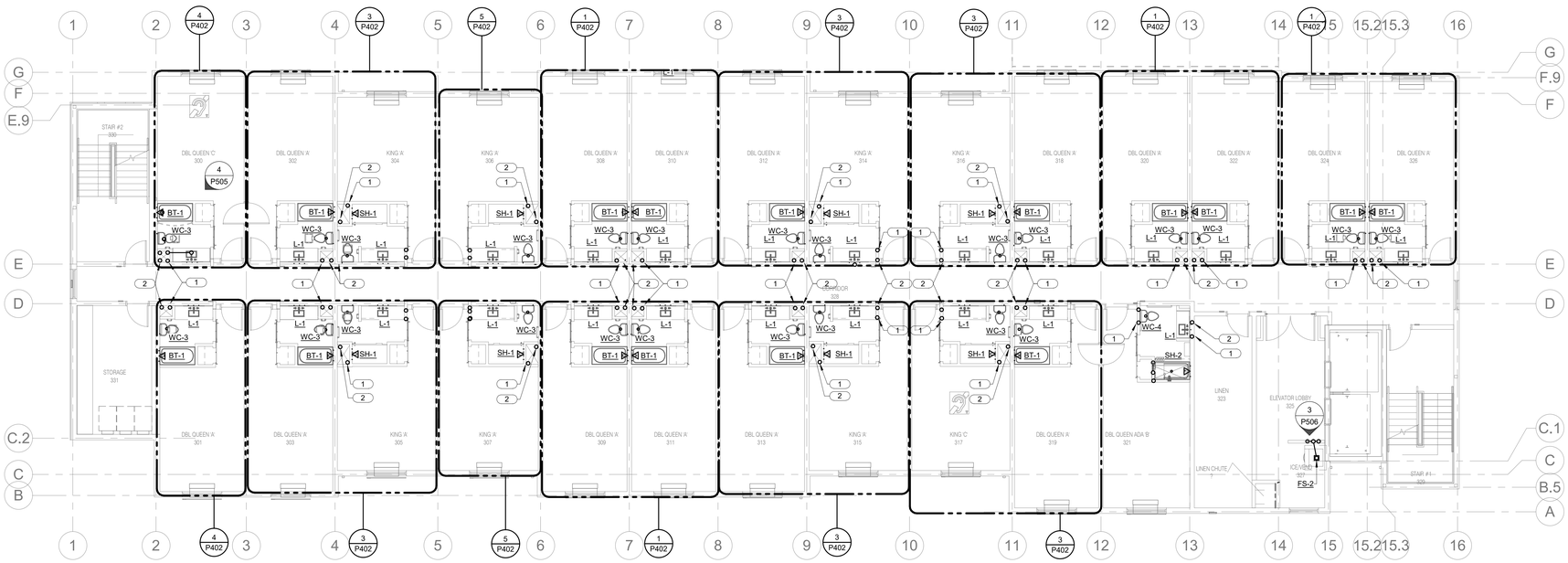

1 THIRD FLOOR PLUMBING WASTE & VENT PLAN

1/8" = 1'-0"

IMEG
9000 E PIMA CENTER PARKWAY
SUITE 320
SCOTTSDALE, AZ 85258
P: 480.222.3771
www.imegcorp.com

IMEG CORP. RESERVES PROPRIETARY RIGHTS, INCLUDING COPYRIGHTS, TO THIS DRAWING AND THE DATA SHOWN THEREON. SAID DRAWING AND/OR DATA ARE THE EXCLUSIVE PROPERTY OF IMEG CORP. AND SHALL NOT BE USED OR REPRODUCED FOR ANY OTHER PROJECT WITHOUT THE EXPRESS WRITTEN APPROVAL AND PARTICIPATION OF IMEG CORP. ©2023 IMEG CORP.

0 1 2 3
REF. SCALE IN INCHES
PROJECT #2002327.00

STAMP

BENJAMIN W. YEUNG
NEW MEXICO
LICENSED PROFESSIONAL ENGINEER

11.03.2023

DYRON MURPHY ARCHITECTS, P.C.
4505 Montbel Place NE, Albuquerque, New Mexico 87107

SHIPROCK PINNACLE HOTEL & RESTAURANT

SHIPROCK, NEW MEXICO

100% CONSTRUCTION DOCUMENTS

ISSUED FOR CONSTRUCTION

NOVEMBER 3, 2023

PROJECT NUMBER	DRAWN BY	PROJ MGR
2022.10	IMEG	IMEG

THIRD & FOURTH FLOOR PLUMBING WASTE & VENT PLAN

Sheet Title

Sheet Number

of

P102

11/3/2023 12:43:29 PM Autodesk Docs://2002327.00 - Shiprock Pinnacle Hotel & Restaurant/MEP/2_2002327.00_Shiprock Pinnacle Hotel_C.rvt
DYRON MURPHY ARCHITECTS, P.C.

KEYNOTES: (#)

1. 4" DOMESTIC WATER SERVICE WITH BUILDING SHUT-OFF VALVE.
2. DOMESTIC WATER PRESSURE BOOSTER PUMP
3. GAS FIRED HIGH EFFICIENCY WATER HEATERS
4. WATER SOFTENER SKID.
5. 3/4" SCW TO ICE MAKER, PROVIDE BALL VALVE, FILTER, WATTS 9D-M3 DUAL CHECK VALVE BFP WITH ATMOSPHERIC VENT COORDINATE EFFORTS REQUIRED WITH EQUIPMENT INSTALLER.
6. 3/4" CW TO HOSE BIBB
7. 3/4" CW UP TO ROOF HYDRANT
8. SCW & SHW RISER.
9. PENTAIR EVERPURE BH2 WATER FILTRATION INSTALLED BELOW COUNTER.

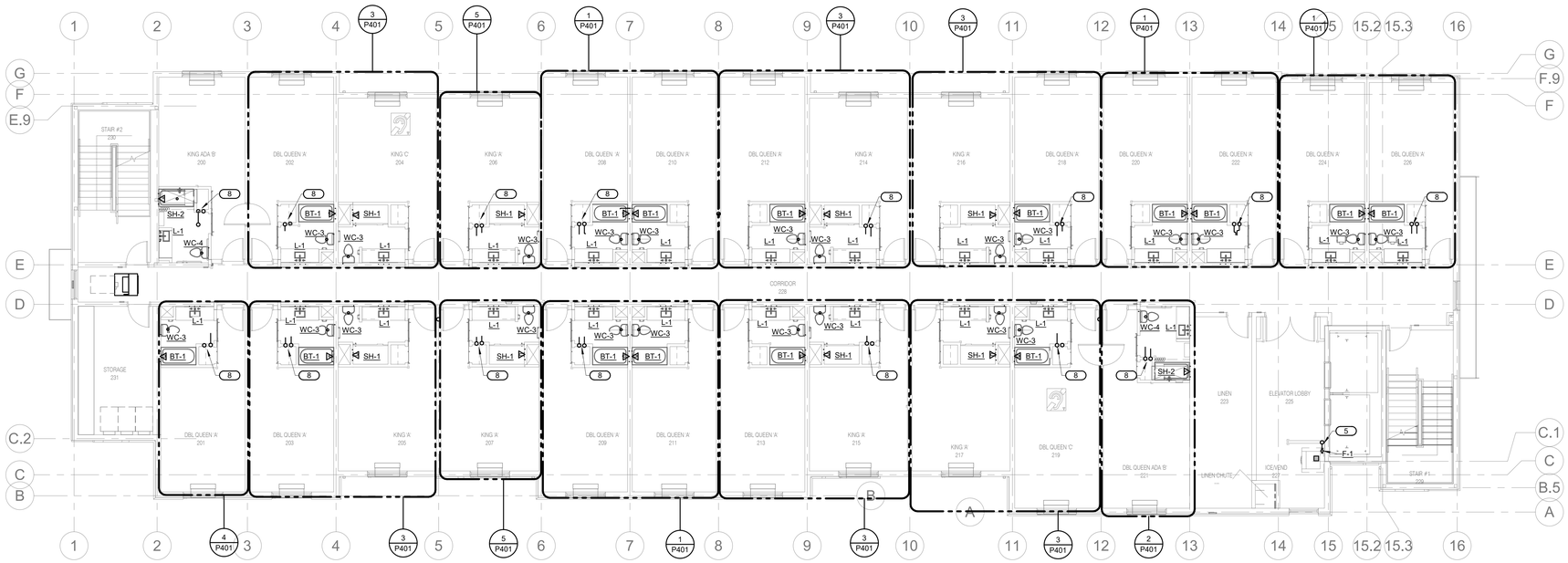

2 SECOND FLOOR PLUMBING DOMESTIC WATER PLAN

1/8" = 1'-0"

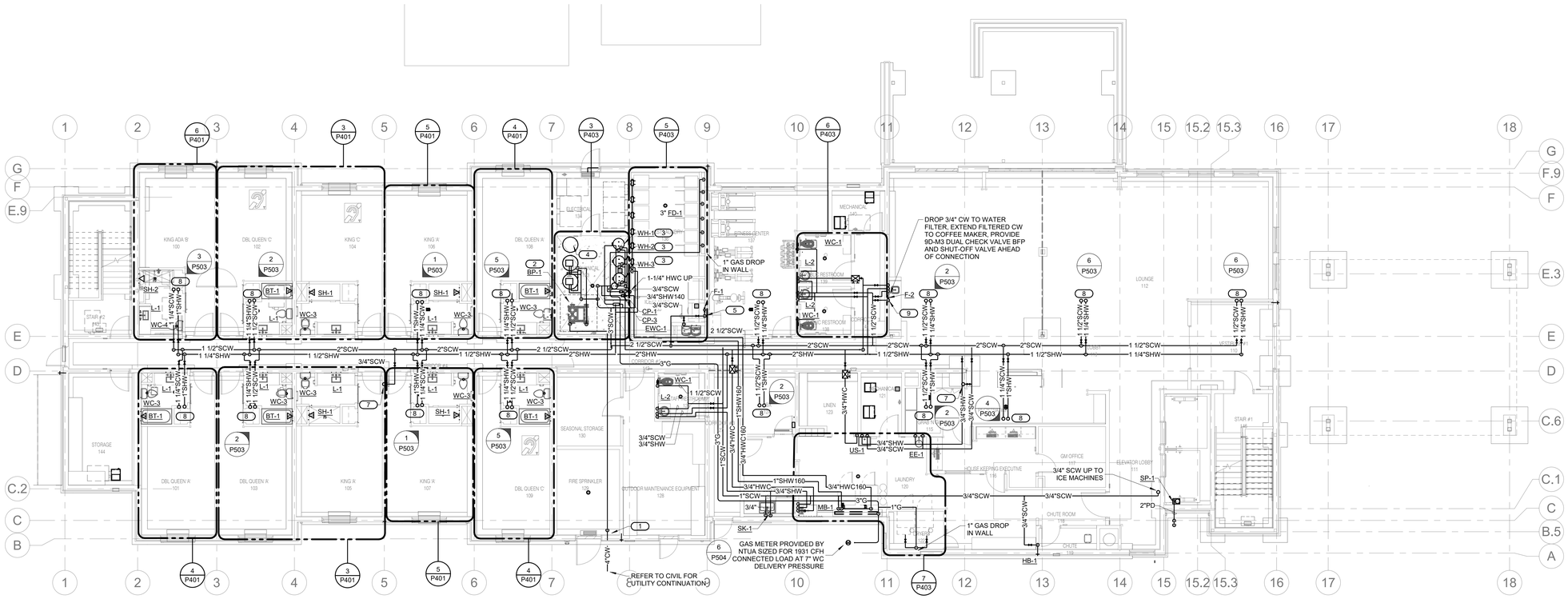

1 FIRST FLOOR PLUMBING DOMESTIC WATER PLAN

1/8" = 1'-0"

IMEG
9000 E PIMA CENTER PARKWAY
SUITE 320
SCOTTSDALE, AZ 85258
P. 480.222.3771
www.imegcorp.com

IMEG CORP. RESERVES PROPRIETARY RIGHTS, INCLUDING COPYRIGHTS, TO THIS DRAWING AND THE DATA SHOWN THEREON. SAID DRAWING AND/OR DATA ARE THE EXCLUSIVE PROPERTY OF IMEG CORP. AND SHALL NOT BE USED OR REPRODUCED FOR ANY OTHER PROJECT WITHOUT THE EXPRESS WRITTEN APPROVAL AND PARTICIPATION OF IMEG CORP. ©2023 IMEG CORP.

0 1 2 3
REF. SCALE IN INCHES — PROJECT #23002327.00

STAMP

BENJAMIN W. VEUNG
NEW MEXICO
LICENSED PROFESSIONAL ENGINEER
11.03.2023

DYRON MURPHY ARCHITECTS, P.C.
4505 Montbel Place NE, Albuquerque, New Mexico 87107

SHIPROCK PINNACLE HOTEL & RESTAURANT

SHIPROCK, NEW MEXICO

100% CONSTRUCTION DOCUMENTS

ISSUED FOR CONSTRUCTION

NOVEMBER 3, 2023

PROJECT NUMBER	DRAWN BY	PROJ MGR
2022.10	IMEG	IMEG

Sheet Title

FIRST & SECOND FLOOR PLUMBING DOMESTIC WATER PLAN

Sheet Number

P104

of

11/3/2023 12:43:50 PM Autodesk Docs://23002327.00 - Shiprock Pinnacle Hotel & Restaurant/MEP/2_23002327.00_Shiprock Pinnacle Hotel_C.rvt
DYRON MURPHY ARCHITECTS, P.C.

KEYNOTES: #

1. DOMESTIC HOT AND / OR COLD WATER UP/DOWN.
2. PEX MULTI-PORT TEE 3/4" INLET AND 1/2" OUTLET TO EACH FIXTURE.
3. 3/4" HWC BRANCH WITH CALIBRATED BALANCING VALVE ADJUSTED TO 1 GPM FLOW, PROVIDE BALL VALVE AT CONNECTION TO MAIN.
4. HOT WATER CIRCULATION MAIN INSTALLED ABOVE CEILING.
5. HOT WATER CIRCULATION MAIN LINE DOWN.
6. 3/4" SCW TO ICE MAKER, PROVIDE BALL VALVE, FILTER, WATTS 9D-M3 DUAL CHECK VALVE BFP WITH ATMOSPHERIC VENT COORDINATE EFFORTS REQUIRED WITH EQUIPMENT INSTALLER.
7. 3/4" SCW UP TO ROOF TO SERVE HOSE BIBB.

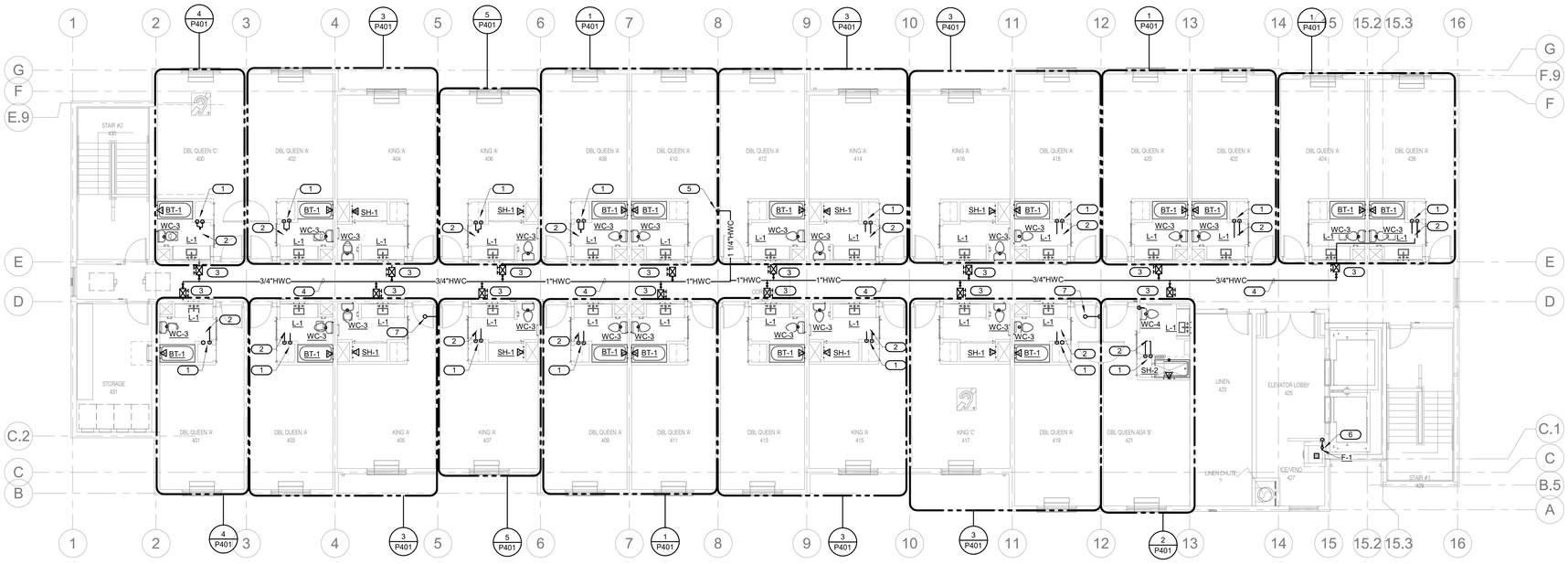

2 FOURTH FLOOR PLUMBING DOMESTIC WATER PLAN

1/8" = 1'-0"

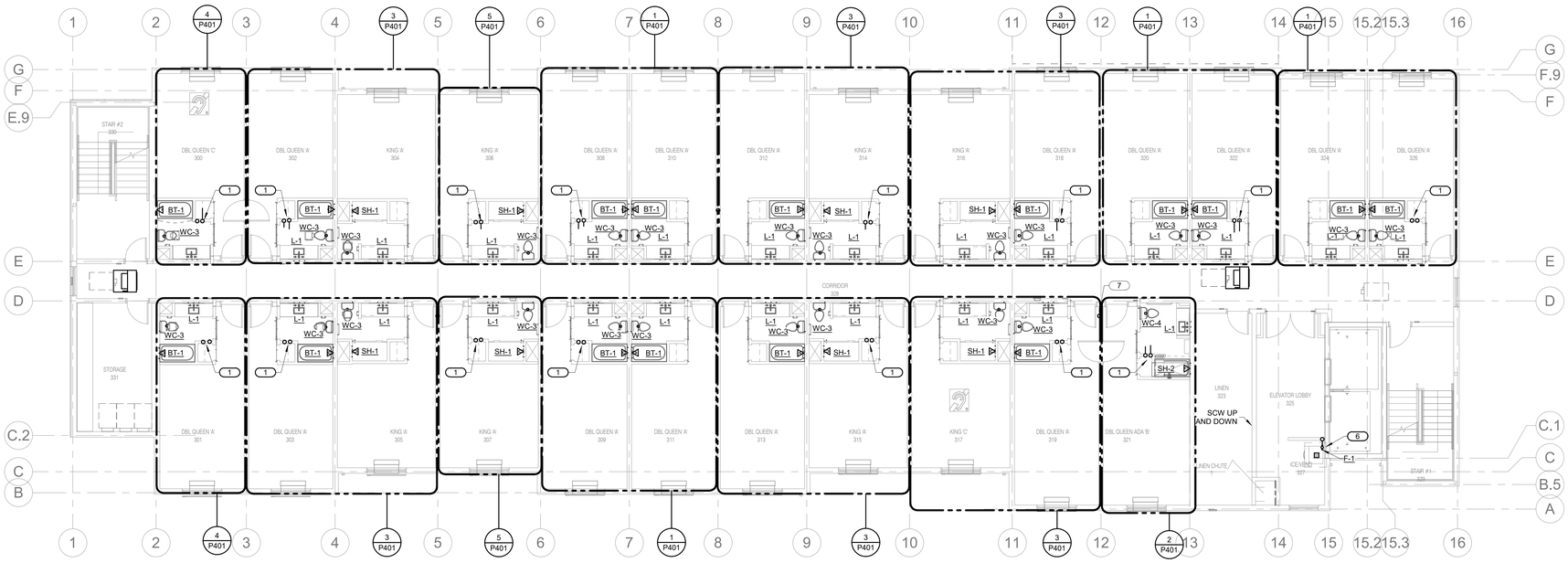

1 THIRD FLOOR PLUMBING DOMESTIC WATER PLAN

1/8" = 1'-0"

IMEG
9000 E PIMA CENTER PARKWAY
SUITE 320
SCOTTSDALE, AZ 85258
P: 480.222.3771
www.imegcorp.com

IMEG CORP. RESERVES PROPRIETARY RIGHTS, INCLUDING COPYRIGHTS, TO THIS DRAWING AND THE DATA SHOWN THEREON. SAID DRAWING AND/OR DATA ARE THE EXCLUSIVE PROPERTY OF IMEG CORP. AND SHALL NOT BE USED OR REPRODUCED FOR ANY OTHER PROJECT WITHOUT THE EXPRESS WRITTEN APPROVAL AND PARTICIPATION OF IMEG CORP. ©2023 IMEG CORP.

0 1 2 3
REF. SCALE IN INCHES
PROJECT #2302327.00

STAMP

BENJAMIN W. YEUNG
NEW MEXICO
LICENSED PROFESSIONAL ENGINEER

11.03.2023

DYRON MURPHY ARCHITECTS, P.C.
4505 Montbel Place NE, Albuquerque, New Mexico 87107

SHIPROCK PINNACLE HOTEL & RESTAURANT

SHIPROCK, NEW MEXICO

100% CONSTRUCTION DOCUMENTS

ISSUED FOR CONSTRUCTION

NOVEMBER 3, 2023

PROJECT NUMBER	DRAWN BY	PROJ MGR
2022.10	IMEG	IMEG

Sheet Title

THIRD & FOURTH FLOOR PLUMBING DOMESTIC WATER PLAN

Sheet Number

P105

of

11/3/2023 12:43:38 PM Autodesk Docs://2302327.00 - Shiprock Pinnacle Hotel & Restaurant/MEP/2_2302327.00_Shiprock Pinnacle Hotel_C.rvt
DYRON MURPHY ARCHITECTS, P.C.

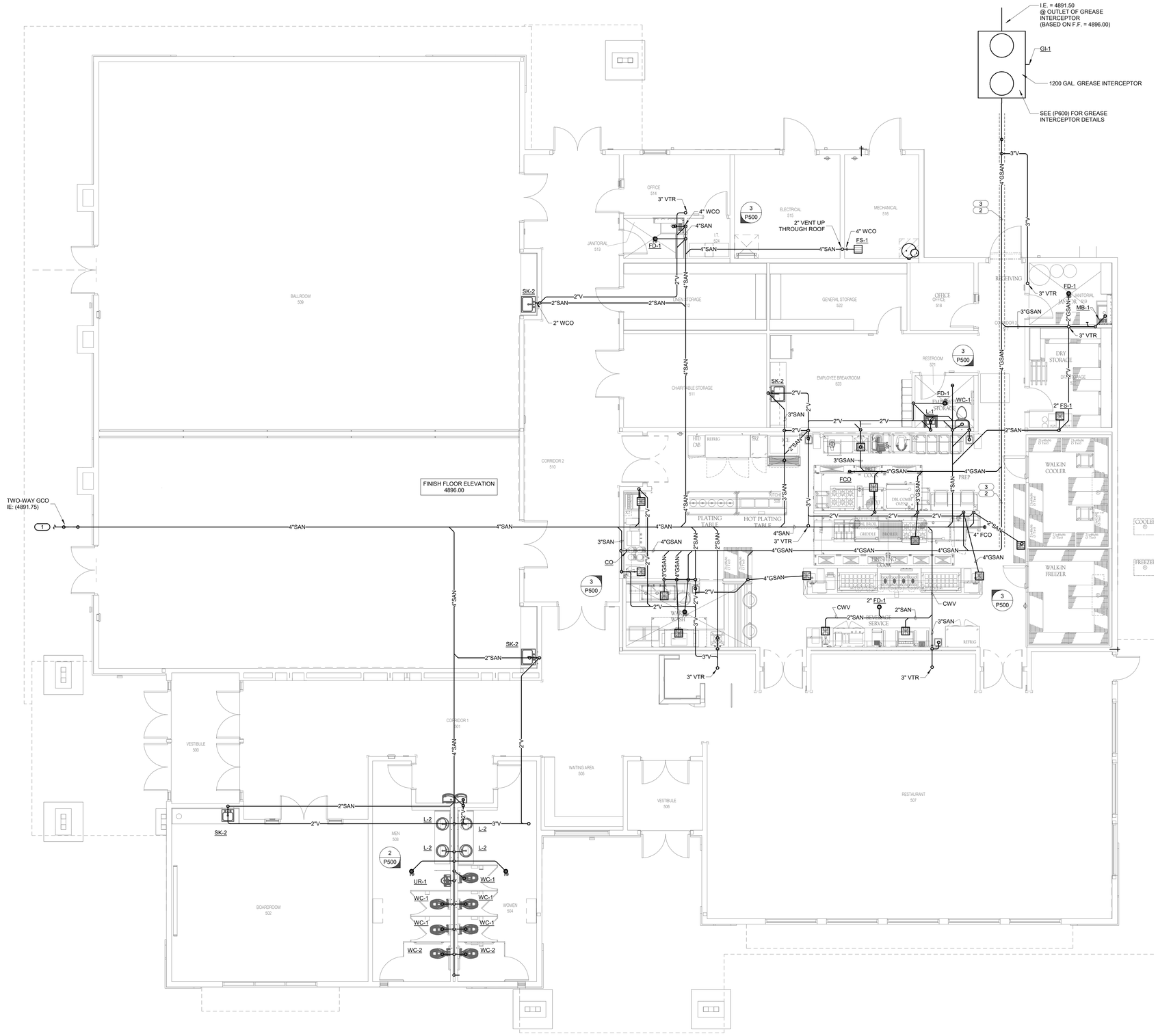

1 PLUMBING WASTE & VENT PLAN - RESTAURANT

3/16" = 1'-0"

NORTH

KEYNOTES: #

1. REFER TO CIVIL UTILITY PLAN FOR CONTINUATION.
2. GREASE WASTE PIPING ROUTED BELOW FLOOR. DASHED LINE INDICATES PORTION OF GREASE WASTE MAIN THAT IS TO BE PROVIDED WITH ELECTRIC HEAT TRACING FOR TEMPERATURE MAINTENANCE.
3. GREASE DRAIN HEAT TRACE CABLES, INSULATED AND INSTALLED IN CONDUIT. ROUTE TO POWER SUPPLY AND END SEAL CONNECTIONS.

IMEG
9000 E PIMA CENTER PARKWAY
SUITE 320
SCOTTSDALE, AZ 85258
P: 480.222.3771
www.imegcorp.com

IMEG CORP. RESERVES PROPRIETARY RIGHTS, INCLUDING COPYRIGHTS, TO THIS DRAWING AND THE DATA SHOWN THEREON. SAID DRAWING AND/OR DATA ARE THE EXCLUSIVE PROPERTY OF IMEG CORP., AND SHALL NOT BE USED OR REPRODUCED FOR ANY OTHER PROJECT WITHOUT THE EXPRESS WRITTEN APPROVAL AND PARTICIPATION OF IMEG CORP. ©2023 IMEG CORP.

0 1 2 3
REF. SCALE IN INCHES

PROJECT #23002327.00

STAMP

BENJAMIN W. YEUNG
NEW MEXICO
LICENSED PROFESSIONAL ENGINEER

11.03.2023

DYRON MURPHY ARCHITECTS, P.C.

4505 Montbel Place NE, Albuquerque, New Mexico 87107

SHIPROCK PINNACLE HOTEL & RESTAURANT

SHIPROCK, NEW MEXICO

100% CONSTRUCTION DOCUMENTS

ISSUED FOR CONSTRUCTION

NOVEMBER 3, 2023

PROJECT NUMBER	DRAWN BY	PROJ MGR
2022.10	IMEG	IMEG

PLUMBING WASTE & VENT PLAN - RESTAURANT

Sheet Title

Sheet Number

of

P106

11/3/2023 12:47:12 PM
Autodesk Docs://23002327.00 - Shiprock Pinnacle Hotel & Restaurant/MEP22_23002327.00_Shiprock Pinnacle Restaurant_C.rvt
DYRON MURPHY ARCHITECTS, P.C.

KEYNOTES: #

1. REFER TO CIVIL UTILITY PLANS FOR CONTINUATION.
2. PIPING ROUTED BELOW FLOOR.
3. DROP CW & HW TO KITCHEN EQUIPMENT.
4. DROP CW TO KITCHEN EQUIPMENT.
5. PROVIDE WATTS LFUSG THERMOSTATIC MIXING VALVE TO ENSURE MAX 110°F HOT WATER AT FAUCET SPOUT.
6. PROVIDE ADDITIONAL CW ROUGH-IN AND WATTS 009 RP BACKFLOW PREVENTER WITH HOSE THREAD ON OUTLET FOR WATER TO CLEANING CHEMICALS DISPENSER.

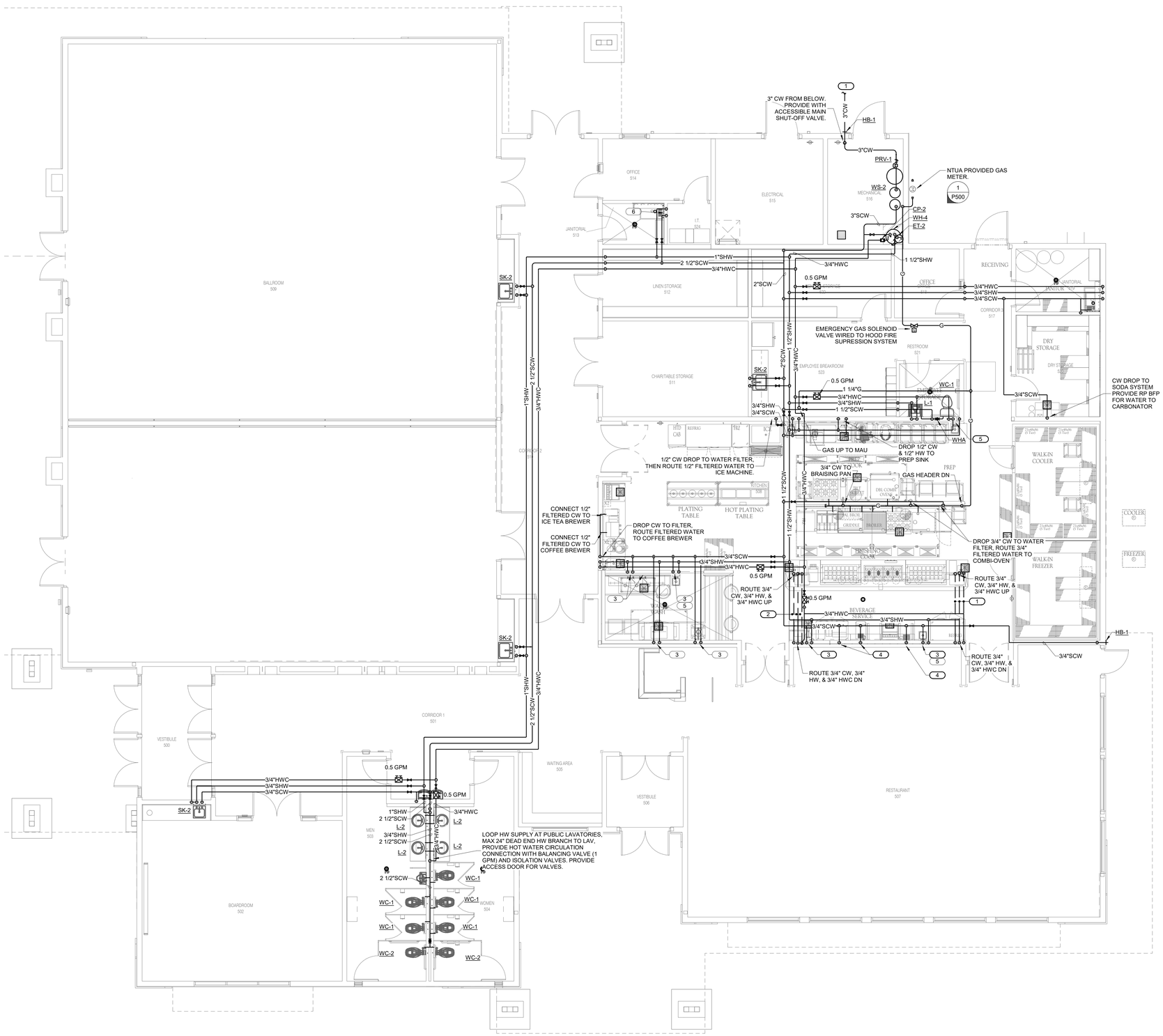

1 PLUMBING DOMESTIC WATER PLAN - RESTAURANT

3/16" = 1'-0"

IMEG
900 E. PIMA CENTER PARKWAY SUITE 320
SCOTTSDALE, AZ 85258
P: 480.222.3771
www.imegcorp.com

IMEG CORP. RESERVES PROPRIETARY RIGHTS, INCLUDING COPYRIGHTS, TO THIS DRAWING AND THE DATA SHOWN THEREON. SAID DRAWING AND/OR DATA ARE THE EXCLUSIVE PROPERTY OF IMEG CORP. AND SHALL NOT BE USED OR REPRODUCED FOR ANY OTHER PROJECT WITHOUT THE EXPRESS WRITTEN APPROVAL AND PARTICIPATION OF IMEG CORP. ©2023 IMEG CORP.

REF. SCALE IN INCHES — PROJECT #23002327.00

STAMP

BENJAMIN W. YEUNG — NEW MEXICO — LICENSED PROFESSIONAL ENGINEER

11.03.2023

DYRON MURPHY ARCHITECTS, P.C.

4505 Montbel Place NE, Albuquerque, New Mexico 87107

SHIPROCK PINNACLE HOTEL & RESTAURANT

SHIPROCK, NEW MEXICO

100% CONSTRUCTION DOCUMENTS

ISSUED FOR CONSTRUCTION

NOVEMBER 3, 2023

PROJECT NUMBER	DRAWN BY	PROJ MGR
2022.10	IMEG	IMEG

PLUMBING DOMESTIC WATER - RESTAURANT

Sheet Title

Sheet Number

of

P107

11/3/2023 12:47:17 PM Autodesk Docs://23002327.00 - Shiprock Pinnacle Hotel & Restaurant/MEP2_23002327.00_Shiprock Pinnacle Restaurant_C.rvt
DYRON MURPHY ARCHITECTS, P.C.

KEYNOTES: #

1. VENT THROUGH ROOF.
2. ROOF HOSE BIBB.
3. .

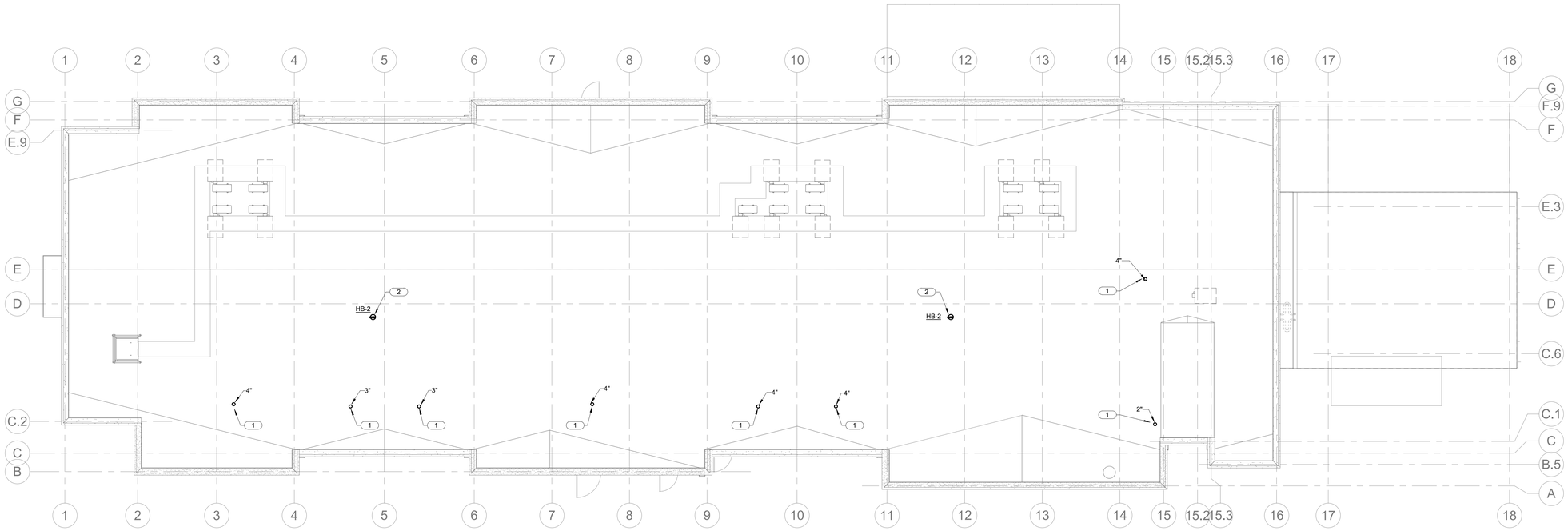

NORTH

1 PLUMBING ROOF PLAN - HOTEL

1/8" = 1'-0"

IMEG
9000 E PIMA CENTER PARKWAY
SUITE 320
SCOTTSDALE, AZ 85258
P: 480.222.3771
www.imegcorp.com

IMEG CORP. RESERVES PROPRIETARY RIGHTS, INCLUDING COPYRIGHTS, TO THIS DRAWING AND THE DATA SHOWN THEREON. SAID DRAWING AND/OR DATA ARE THE EXCLUSIVE PROPERTY OF IMEG CORP. AND SHALL NOT BE USED OR REPRODUCED FOR ANY OTHER PROJECT WITHOUT THE EXPRESS WRITTEN APPROVAL AND PARTICIPATION OF IMEG CORP. ©2023 IMEG CORP.

0 1 2 3
REF. SCALE IN INCHES

PROJECT #23002327.00

STAMP

BENJAMIN W. YEUNG
NEW MEXICO
LICENSED PROFESSIONAL ENGINEER

11.03.2023

DYRON MURPHY ARCHITECTS, P.C.

4505 Montbel Place NE, Albuquerque, New Mexico 87107

SHIPROCK PINNACLE HOTEL & RESTAURANT

SHIPROCK, NEW MEXICO

100% CONSTRUCTION DOCUMENTS

ISSUED FOR CONSTRUCTION

NOVEMBER 3, 2023

PROJECT NUMBER	DRAWN BY	PROJ MGR
2022.10	IMEG	IMEG

PLUMBING ROOF PLAN - HOTEL

Sheet Title

Sheet Number of

P112

11/3/2023 12:44:02 PM Autodesk Docs://23002327.00 - Shiprock Pinnacle Hotel & Restaurant/MEP/2_23002327.00_Shiprock Pinnacle Hotel_C.rvt
DYRON MURPHY ARCHITECTS, P.C.

NORTH

1 **PLUMBING ROOF PLAN - RESTAURANT**
3/16" = 1'-0"

IMEG
www.imegcorp.com
9000 E PIMA CENTER PARKWAY
SUITE 320
SCOTTSDALE, AZ 85258
P: 480.222.3771

IMEG CORP. RESERVES PROPRIETARY RIGHTS, INCLUDING COPYRIGHTS, TO THIS DRAWING AND THE DATA SHOWN THEREON. SAID DRAWING AND/OR DATA ARE THE EXCLUSIVE PROPERTY OF IMEG CORP. AND SHALL NOT BE USED OR REPRODUCED FOR ANY OTHER PROJECT WITHOUT THE EXPRESS WRITTEN APPROVAL AND PARTICIPATION OF IMEG CORP. ©2023 IMEG CORP.

0 1 2 3
REF. SCALE IN INCHES

PROJECT #23002327.00

STAMP

BENJAMIN W. YEUNG
NEW MEXICO
LICENSED PROFESSIONAL ENGINEER

11.03.2023

DYRON MURPHY ARCHITECTS, P.C.

4505 Montbel Place NE, Albuquerque, New Mexico 87107

SHIPROCK PINNACLE HOTEL & RESTAURANT

SHIPROCK, NEW MEXICO

100% CONSTRUCTION DOCUMENTS

ISSUED FOR CONSTRUCTION

NOVEMBER 3, 2023

PROJECT NUMBER	DRAWN BY	PROJ MGR
2022.10	IMEG	IMEG

PLUMBING ROOF PLAN - RESTAURANT

Sheet Title

Sheet Number of

P113

11/3/2023 12:47:18 PM Autodesk Docs://23002327.00 - Shiprock Pinnacle Hotel & Restaurant/MEP/2_23002327.00_Shiprock Pinnacle Restaurant_C.rvt
DYRON MURPHY ARCHITECTS, P.C.

KEYNOTES: #

1. CW RISER UP AND DOWN.
2. HW RISER UP AND DOWN.
3. PEX MULTI-PORT TEE, 3/4" INLET AND 1/2" OUTLET TO EACH FIXTURE.

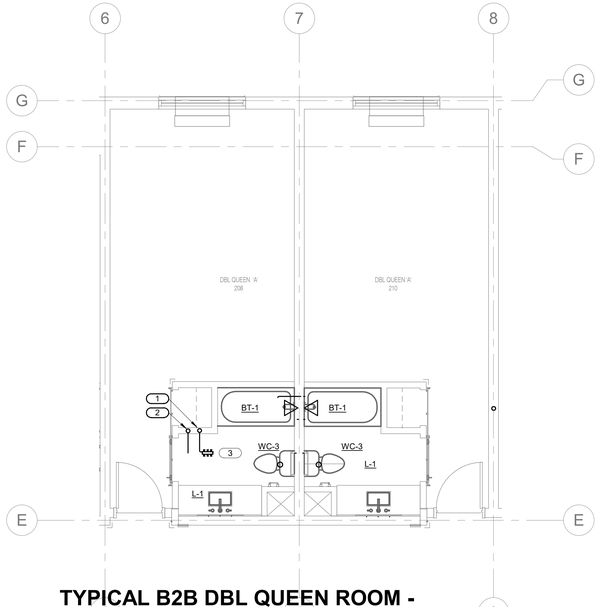

NORTH 1 **TYPICAL B2B DBL QUEEN ROOM - DOMESTIC WATER PLAN**

1/4" = 1'-0"

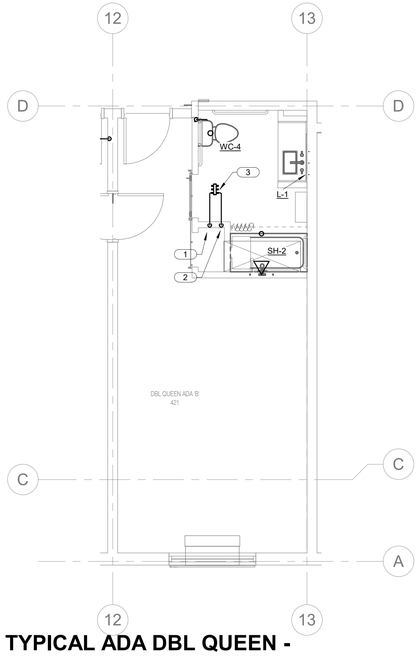

NORTH 2 **TYPICAL ADA DBL QUEEN - DOMESTIC WATER PLAN**

1/4" = 1'-0"

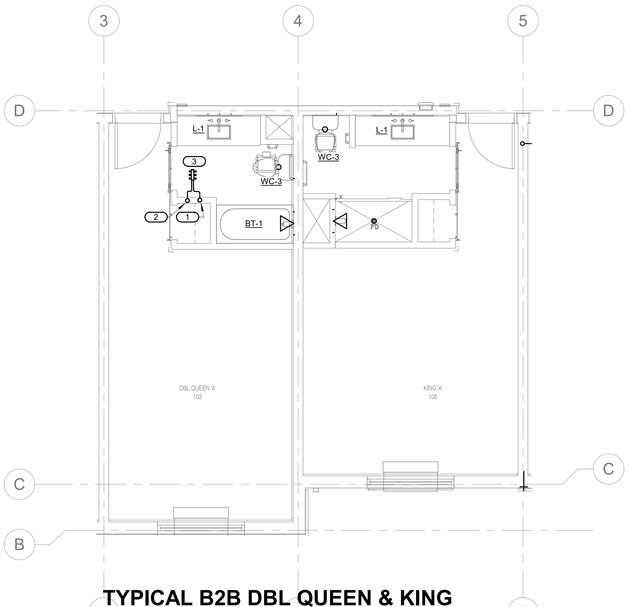

NORTH 3 **TYPICAL B2B DBL QUEEN & KING ROOM - DOMESTIC WATER PLAN**

1/4" = 1'-0"

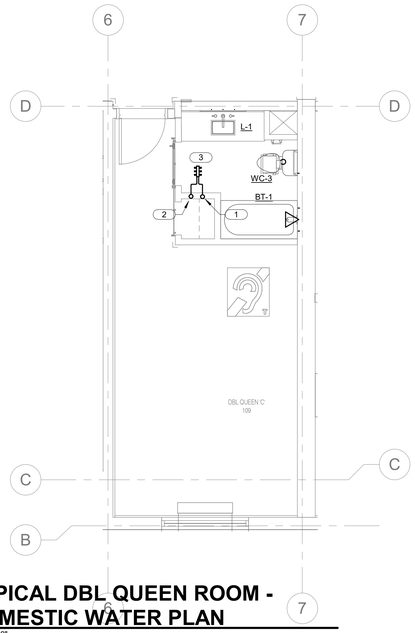

NORTH 4 **TYPICAL DBL QUEEN ROOM - DOMESTIC WATER PLAN**

1/4" = 1'-0"

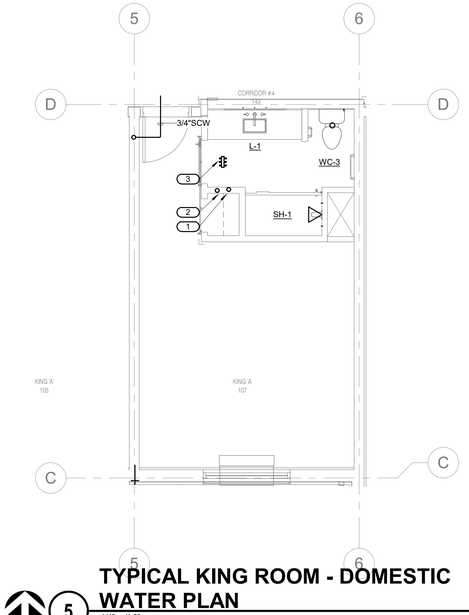

NORTH 5 **TYPICAL KING ROOM - DOMESTIC WATER PLAN**

1/4" = 1'-0"

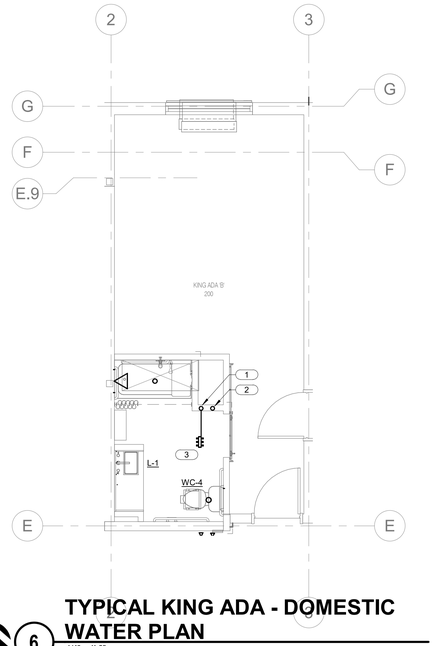

NORTH 6 **TYPICAL KING ADA - DOMESTIC WATER PLAN**

1/4" = 1'-0"

IMEG
9000 E PIMA CENTER PARKWAY
SUITE 320
SCOTTSDALE, AZ 85258
P: 480.222.3771
www.imegcorp.com

IMEG CORP. RESERVES PROPRIETARY RIGHTS, INCLUDING COPYRIGHTS, TO THIS DRAWING AND THE DATA SHOWN THEREON. SAID DRAWING AND/OR DATA ARE THE EXCLUSIVE PROPERTY OF IMEG CORP. AND SHALL NOT BE USED OR REPRODUCED FOR ANY OTHER PROJECT WITHOUT THE EXPRESS WRITTEN APPROVAL AND PARTICIPATION OF IMEG CORP. ©2023 IMEG CORP.

0 1 2 3

REF. SCALE IN INCHES PROJECT #23002327.00

STAMP

BENJAMIN W. YEUNG
NEW MEXICO
LICENSED PROFESSIONAL ENGINEER

11.03.2023

DYRON MURPHY ARCHITECTS, P.C.

4505 Montbel Place NE, Albuquerque, New Mexico 87107

SHIPROCK PINNACLE HOTEL & RESTAURANT

SHIPROCK, NEW MEXICO

100% CONSTRUCTION DOCUMENTS

ISSUED FOR CONSTRUCTION

NOVEMBER 3, 2023

PROJECT NUMBER	DRAWN BY	PROJ MGR
2022.10	IMEG	IMEG

PLUMBING ENLARGED PLANS

Sheet Title

Sheet Number of

P401

11/3/2023 12:44:23 PM Autodesk Docs://23002327.00 - Shiprock Pinnacle Hotel & Restaurant/MEP22_23002327.00_Shiprock Pinnacle Hotel_C.rvt
DYRON MURPHY ARCHITECTS, P.C.

KEYNOTES: #

1. WASTE STACK.
2. VENT STACK.
3. .

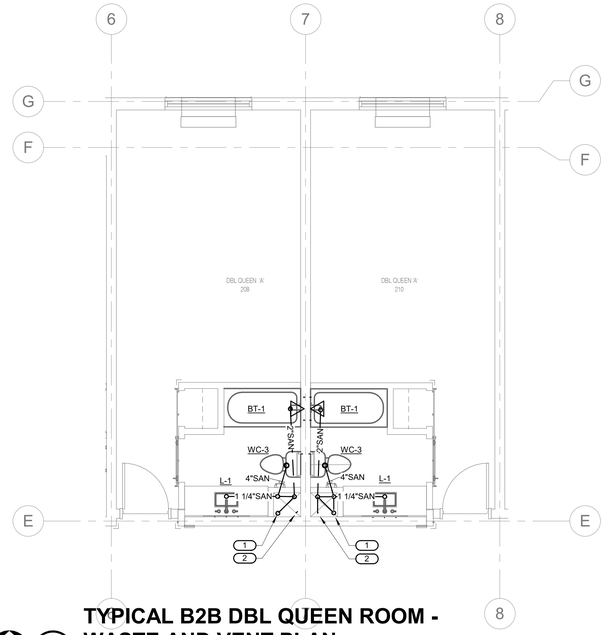

1 TYPICAL B2B DBL QUEEN ROOM - WASTE AND VENT PLAN
1/4" = 1'-0"

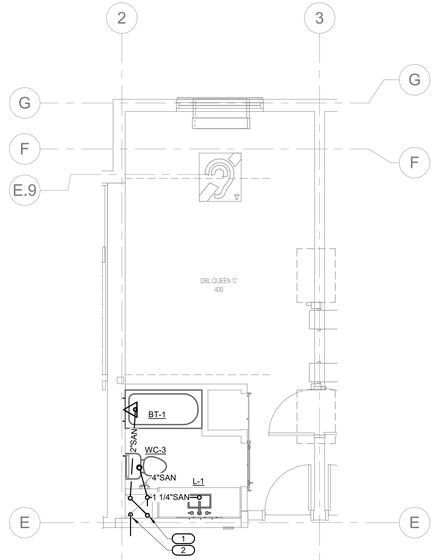

2 TYPICAL ADA DBL QUEEN - WASTE AND VENT PLAN
1/4" = 1'-0"

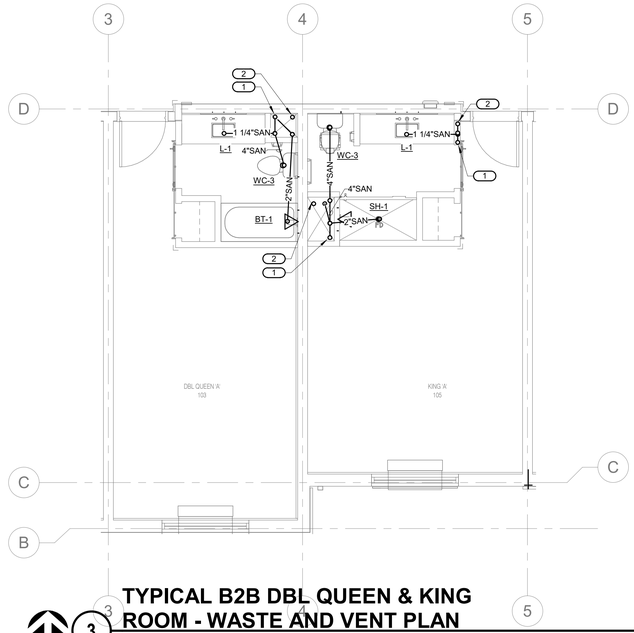

3 TYPICAL B2B DBL QUEEN & KING ROOM - WASTE AND VENT PLAN
1/4" = 1'-0"

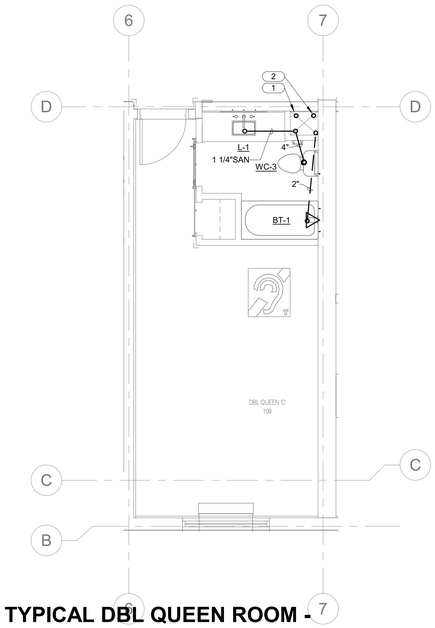

4 TYPICAL DBL QUEEN ROOM - WASTE AND VENT PLAN
1/4" = 1'-0"

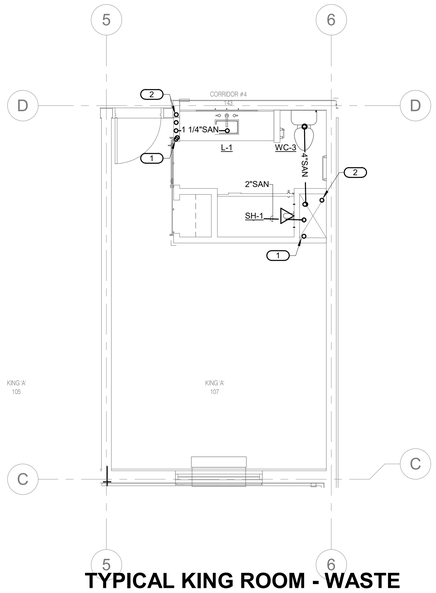

5 TYPICAL KING ROOM - WASTE AND VENT PLAN
1/4" = 1'-0"

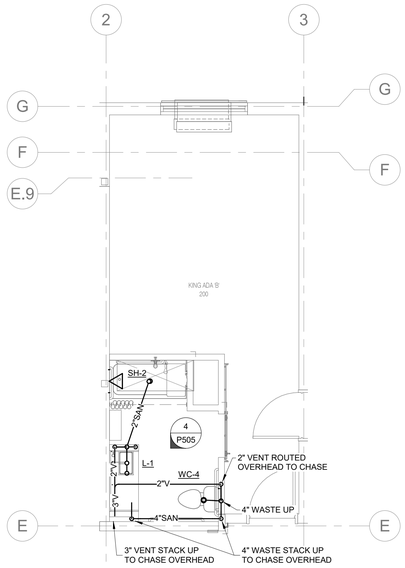

6 TYPICAL KING ADA - WASTE AND VENT PLAN
1/4" = 1'-0"

IMEG
9000 E PIMA CENTER PARKWAY
SUITE 320
SCOTTSDALE, AZ 85258
P: 480.222.3771
www.imegcorp.com

IMEG CORP. RESERVES PROPRIETARY RIGHTS, INCLUDING COPYRIGHTS, TO THIS DRAWING AND THE DATA SHOWN THEREON. SAID DRAWING AND/OR DATA ARE THE EXCLUSIVE PROPERTY OF IMEG CORP. AND SHALL NOT BE USED OR REPRODUCED FOR ANY OTHER PROJECT WITHOUT THE EXPRESS WRITTEN APPROVAL AND PARTICIPATION OF IMEG CORP. ©2023 IMEG CORP.

0 1 2 3
REF. SCALE IN INCHES
PROJECT #23002327.00

STAMP

11.03.2023

DYRON MURPHY ARCHITECTS, P.C.
4505 Montbel Place NE, Albuquerque, New Mexico 87107

SHIPROCK PINNACLE HOTEL & RESTAURANT

SHIPROCK, NEW MEXICO

100% CONSTRUCTION DOCUMENTS

ISSUED FOR CONSTRUCTION

NOVEMBER 3, 2023

PROJECT NUMBER	DRAWN BY	PROJ MGR
2022.10	IMEG	IMEG

PLUMBING ENLARGED PLANS

Sheet Title

Sheet Number of

P402

11/3/2023 12:44:28 PM Autodesk Docs://23002327.00 - Shiprock Pinnacle Hotel & Restaurant/MEP22_23002327.00_Shiprock Pinnacle Hotel_C.rvt
DYRON MURPHY ARCHITECTS, P.C.

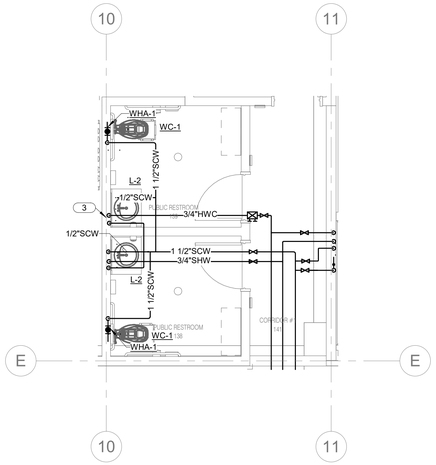

1 LOBBY PUBLIC RESTROOM - DOMESTIC WATER PLAN

1/4" = 1'-0"

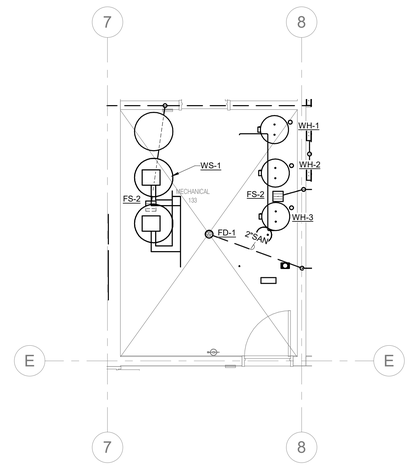

2 ENLARGED MECHANICAL ROOM - WASTE AND VENT PLAN

1/4" = 1'-0"

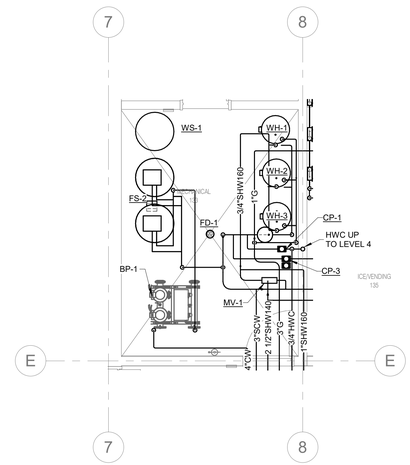

3 ENLARGED MECHANICAL ROOM - PLUMBING PLAN

1/4" = 1'-0"

KEYNOTES: #

1. ROUTE GAS PIPING OVERHEAD.
2. 1/2" CW AND 1/2" HW TO SERVE WASHERS.
3. LOOP HW SUPPLY AT PUBLIC LAVATORIES, MAX 24" DEAD END HW BRANCH TO LAV, PROVIDE HOT WATER CIRCULATION CONNECTION WITH BALANCING VALVE (1 GPM) AND ISOLATION VALVES. PROVIDE ACCESS DOOR FOR VALVES.
4. 3/4" SCW TO ICE MAKER. PROVIDE BALL VALVE, FILTER, WATTS 9D-M3 DUAL CHECK VALVE BFP WITH ATMOSPHERIC VENT COORDINATE EFFORTS REQUIRED WITH EQUIPMENT INSTALLER.

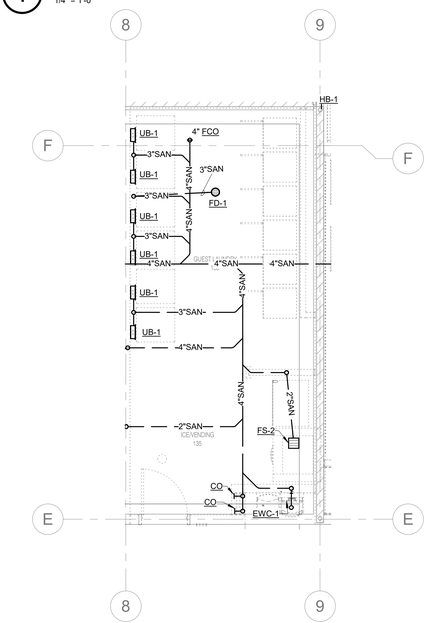

4 ENLARGED GUEST LAUNDRY - WASTE PLAN

1/4" = 1'-0"

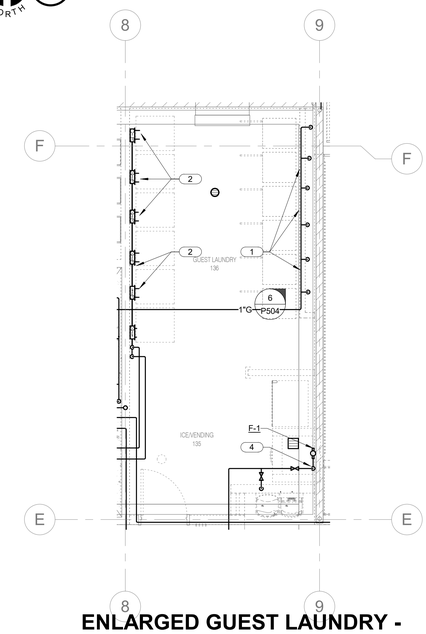

5 ENLARGED GUEST LAUNDRY - PLUMBING PLAN

1/4" = 1'-0"

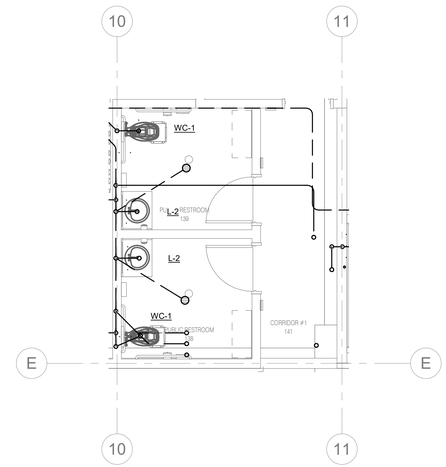

6 LOBBY PUBLIC RESTROOM - WASTE AND VENT PLAN

1/4" = 1'-0"

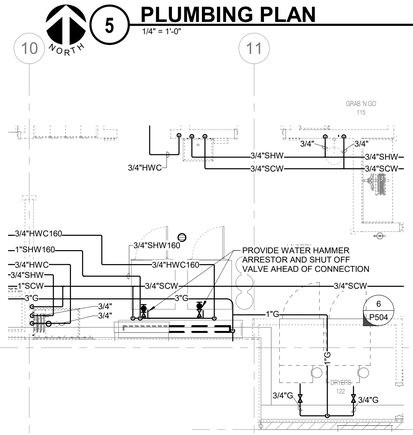

7 ENLARGED LAUNDRY DOMESTIC WATER PLAN

1/4" = 1'-0"

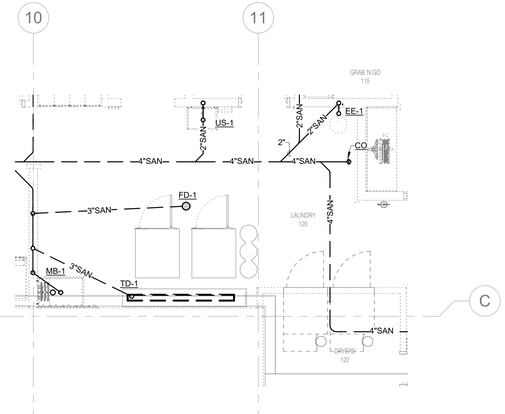

8 ENLARGED LAUNDRY WASTE AND VENT

1/4" = 1'-0"

IMEG
9000 E PIMA CENTER PARKWAY
SUITE 320
SCOTTSDALE, AZ 85258
P: 480.222.3771
www.imegcorp.com

IMEG CORP. RESERVES PROPRIETARY RIGHTS, INCLUDING COPYRIGHTS, TO THIS DRAWING AND THE DATA SHOWN THEREON. SAID DRAWING AND/OR DATA ARE THE EXCLUSIVE PROPERTY OF IMEG CORP. AND SHALL NOT BE USED OR REPRODUCED FOR ANY OTHER PROJECT WITHOUT THE EXPRESS WRITTEN APPROVAL AND PARTICIPATION OF IMEG CORP. ©2023 IMEG CORP.

0 1 2 3
REF. SCALE IN INCHES

PROJECT #23002327.00

STAMP

BENJAMIN W. YEUNG
NEW MEXICO
LICENSED PROFESSIONAL ENGINEER

11.03.2023

DYRON MURPHY ARCHITECTS, P.C.
4505 Montbel Place NE, Albuquerque, New Mexico 87107

SHIPROCK PINNACLE HOTEL & RESTAURANT

SHIPROCK, NEW MEXICO

100% CONSTRUCTION DOCUMENTS

ISSUED FOR CONSTRUCTION

NOVEMBER 3, 2023

PROJECT NUMBER	DRAWN BY	PROJ MGR
2022.10	IMEG	IMEG

PLUMBING ENLARGED PLANS

Sheet Title

Sheet Number

of

P403

11/3/2023 12:44:38 PM Autodesk Docs://23002327.00 - Shiprock Pinnacle Hotel & Restaurant/MEP/2_23002327.00_Shiprock Pinnacle Hotel_C.rvt
DYRON MURPHY ARCHITECTS, P.C.

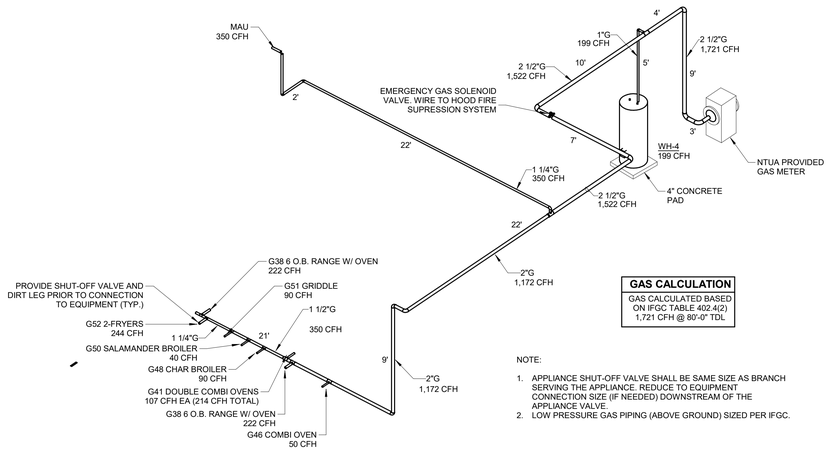

GAS CALCULATION

GAS CALCULATED BASED ON IFGC TABLE 402.4(2)
1,721 CFH @ 80'-0" TDL

NOTE:

1. APPLIANCE SHUT-OFF VALVE SHALL BE SAME SIZE AS BRANCH SERVING THE APPLIANCE. REDUCE TO EQUIPMENT CONNECTION SIZE (IF NEEDED) DOWNSTREAM OF THE APPLIANCE VALVE.
2. LOW PRESSURE GAS PIPING (ABOVE GROUND) SIZED PER IFGC.

1 PLUMBING GAS ISOMETRIC DIAGRAM - RESTAURANT

NO SCALE

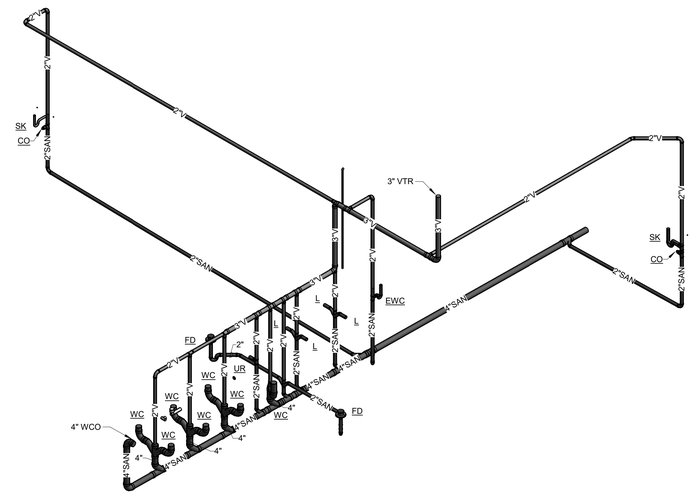

2 RESTAURANT PUBLIC RESTROOM WASTE AND VENT ISOMETRIC

NO SCALE

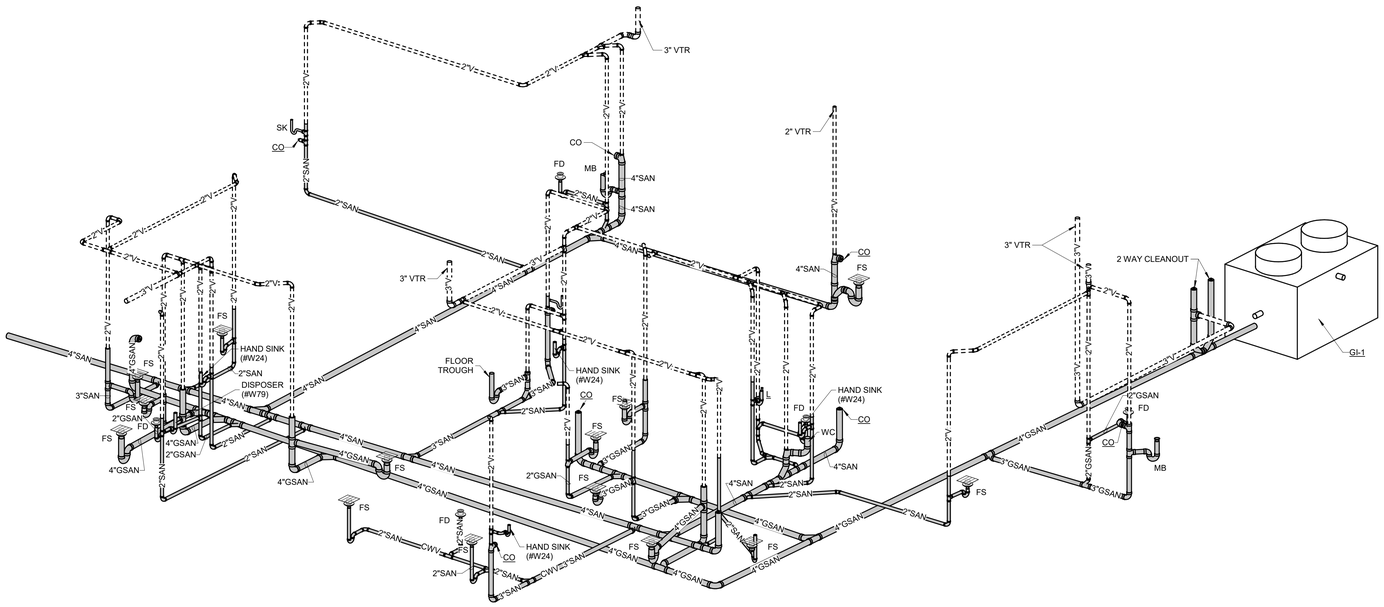

3 KITCHEN WASTE AND VENT ISOMETRIC

NO SCALE

IMEG
9000 E PIMA CENTER PARKWAY
SUITE 320
SCOTTSDALE, AZ 85258
P: 480.222.3771
www.imegcorp.com

IMEG CORP. RESERVES PROPRIETARY RIGHTS, INCLUDING COPYRIGHTS, TO THIS DRAWING AND THE DATA SHOWN THEREON. SAID DRAWING AND/OR DATA ARE THE EXCLUSIVE PROPERTY OF IMEG CORP. AND SHALL NOT BE USED OR REPRODUCED FOR ANY OTHER PROJECT WITHOUT THE EXPRESS WRITTEN APPROVAL AND PARTICIPATION OF IMEG CORP. ©2023 IMEG CORP.

0 1 2 3
REF. SCALE IN INCHES
PROJECT #23002327.00

STAMP

BENJAMIN W. YEUNG
NEW MEXICO
23000
LICENSED PROFESSIONAL ENGINEER

11.03.2023

DYRON MURPHY ARCHITECTS, P.C.
4505 Montbel Place NE, Albuquerque, New Mexico 87107

SHIPROCK PINNACLE HOTEL & RESTAURANT

SHIPROCK, NEW MEXICO

100% CONSTRUCTION DOCUMENTS

ISSUED FOR CONSTRUCTION

NOVEMBER 3, 2023

PROJECT NUMBER	DRAWN BY	PROJ MGR
2022.10	IMEG	IMEG

PLUMBING DETAILS AND DIAGRAMS

Sheet Title

Sheet Number

of

P500

11/3/2023 12:47:25 PM Autodesk Docs://23002327.00 - Shiprock Pinnacle Hotel & Restaurant/MEP/2_23002327.00_Shiprock Pinnacle Restaurant_C.rvt
DYRON MURPHY ARCHITECTS, P.C.

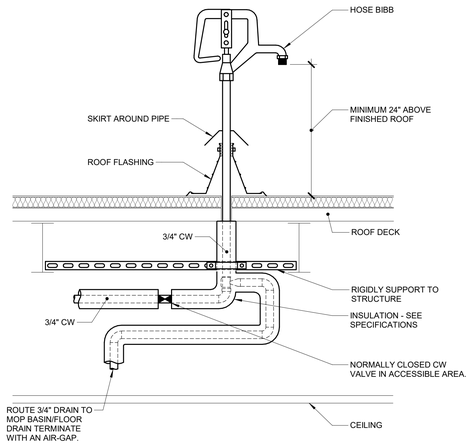

1 ROOF HOSE BIBB

NO SCALE
M_HB.0.01

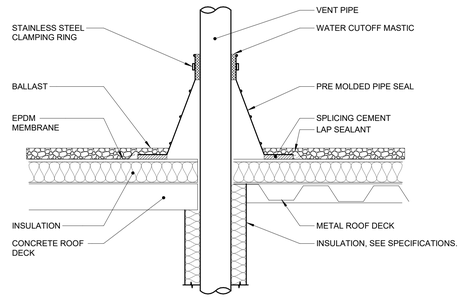

NOTES:

1. VENT PIPE SHALL BE A MINIMUM OF 3" DIAMETER UNLESS NOTED LARGER ON FLOOR PLANS. INCREASERS, IF REQUIRED TO TRANSITION TO THE LARGER VTR SIZE, MUST BE INSTALLED AT LEAST 12 INCHES BELOW THE THERMAL ENVELOPE OF THE BUILDING.
2. EXTEND VENT PIPE AT LEAST 7 FEET ABOVE ROOF LEVEL WHEN ROOF AREA IS INTENDED TO BE USED BY THE GENERAL PUBLIC. THIS INCLUDES PROMENADES, OBSERVATION DECKS, ETC. THIS IS NOT REQUIRED FOR ROOFS THAT ARE ACCESSIBLE BY MAINTENANCE PERSONEL ONLY.

2 VENT PIPE FLASHING

NO SCALE
M_PEN.0.22

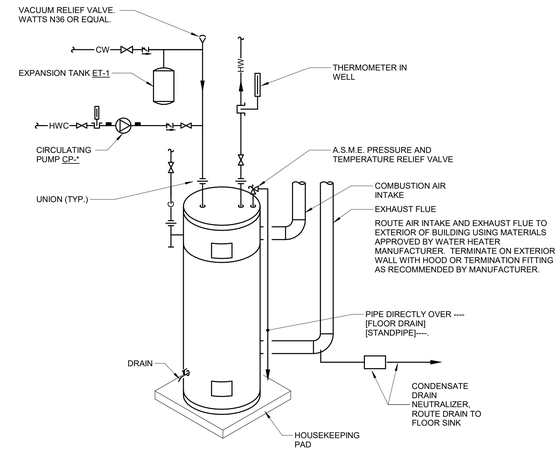

3 WATER HEATER - GAS TANK W/HWC

NO SCALE
M_WH.0.08

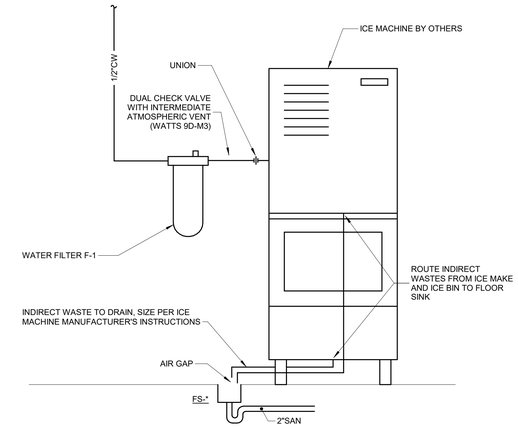

4 UTILITY BOX - ICE MACHINE

NO SCALE
M_UB.0.01

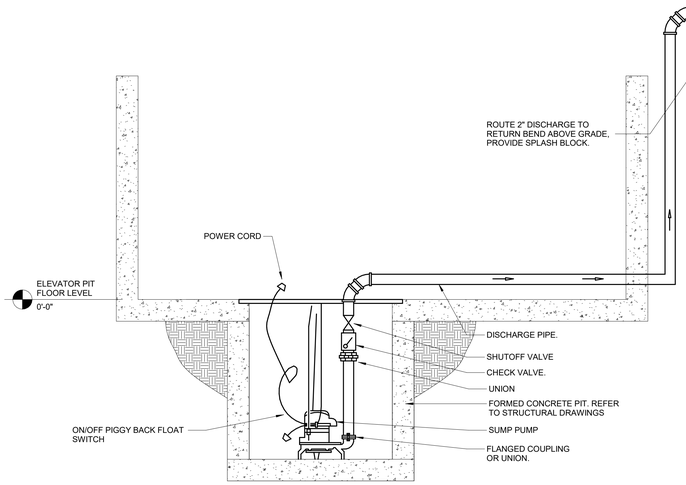

NOTES:

1. INSTALL CONTROL PANEL PER MANUFACTURER INSTRUCTIONS. COMPONENTS AND WIRING ARRANGEMENT MAY DIFFER FROM THAT SHOWN.

5 ELEVATOR PIT SUMP PUMP DETAIL

NO SCALE
M_SP.0.01

NOTES
■ IN COMPLIANCE WITH UNIFORM PLUMBING CODE (UPC), INTERNATIONAL PLUMBING CODE (IPC), AND STRUCTURAL LOADING REQUIREMENTS OF ASTM INTERNATIONAL C1613.
■ JENSEN PRECAST'S PRODUCT IS LISTED BY IAPMO R&T TO STANDARD Z1001. MODEL JP-1200-EE-G
■ MUST BE INSTALLED PER "JENSEN PRECAST UNDERGROUND WASTEWATER PRECAST CONCRETE TANK INSTALLATION PROCEDURE" WHICH CAN BE FOUND AT https://www.jensenprecast.com/Tank-Installation-Procedure-d2106.pdf. THIS PROCEDURE ADDRESSES REQUIRED EXCAVATION, SITE PREPARATION, INSTALLATION, VENTILATION, AND WATER/VACCUM TESTING

BILL OF MATERIALS

ITEM	QTY	PART NUMBER	DESCRIPTION	WEIGHT (LBS)
1	1	200017871	Tank JP 1200 Gallon 4 Inch Assembly EE Single Baffle	13791
2	1	200048776	200030234 Plumbing - JP 1200 4 Inch Gravity Grease Interceptor 24"E, 24"E Single Baffle	10
3	JOB SPECIFIC	100005850	CI RINGCOVER 24DIA B-5105-02/B-5105-R2 ASTM A48 CL35B CP O-RING GASKET OSI JENSEN/INTERCEPT	196
4	JOB SPECIFIC	100001524	Grade Ring D2432x3	87
5	JOB SPECIFIC	100001525	Grade Ring D2432x6	180
6	JOB SPECIFIC	100001526	Grade Ring D2432x12	365
7	JOB SPECIFIC	100012046	Plug Cover D2428x6 Slab Top	300

200030234.dwg

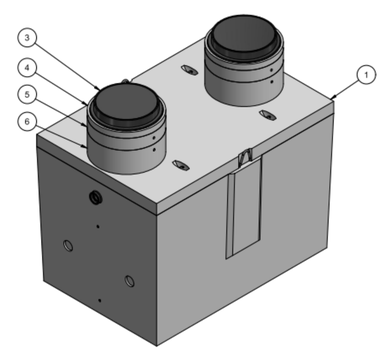

ISO LAYOUT

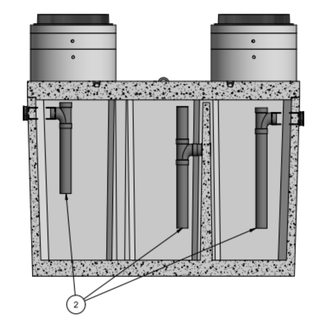

SECTION

MODEL:
JP-1200-EE-G

REVISION HISTORY

REV	DESCRIPTION	DATE	BY
A	DRAWING CREATED	10/4/2019	J HILLMAN
B	TOP SLAB LIFTING AND PLUMBING UPDATED	2/5/2021	C.Keller
C	ACCESSORIES UPDATED	6/29/2022	E.FINE

BURY DEPTH:	1.1' - 6.0' to Top		
WATER LEVEL:	Below Structure	WEIGHT:	15757.04 Lbs
DESIGN SPEC:	ASTM C890,ACI 318	LOADING SPEC:	A-16 (AASHTO HS20-44)
REINFORCEMENT TYPE:		LIFTING TYPE:	

JENSEN PRECAST EST. 1968
WWW.JENSENPRECAST.COM

©2018 Jensen Precast-All rights reserved.
All materials appearing on Jensen Precast documents and the like are proprietary work product and are protected under U.S. copyright laws.
Unless in conjunction with business conducted with Jensen Precast, any use of Jensen Precast work product without express, written consent is prohibited, and recipient is prohibited from distributing any and all work product to non-approved third parties under penalty of civil action.

DESCRIPTION:	Tank JP 1200 Gallon 4 Inch Layout Gravity Grease Interceptor 24"E, 24"E Single Baffle LAYOUT REVIEW		REV: D-1
PART NUMBER:	200030234	DRAWN BY: E. Fine	SHEET: 1 OF 2
CREATED:	1/31/2019	MODIFIED: 6/29/2022	

IMEG
9000 E PIMA CENTER PARKWAY
SUITE 320
SCOTTSDALE, AZ 85258
P: 480.222.3771
www.imegcorp.com

IMEG CORP. RESERVES PROPRIETARY RIGHTS, INCLUDING COPYRIGHTS, TO THIS DRAWING AND THE DATA SHOWN THEREON. SAID DRAWING AND/OR DATA ARE THE EXCLUSIVE PROPERTY OF IMEG CORP. AND SHALL NOT BE USED OR REPRODUCED FOR ANY OTHER PROJECT WITHOUT THE EXPRESS WRITTEN APPROVAL AND PARTICIPATION OF IMEG CORP. ©2023 IMEG CORP.

0 1 2 3
REF. SCALE IN INCHES
PROJECT #23002327.00

STAMP

BENJAMIN W. YEUNG
NEW MEXICO
23802
LICENSED PROFESSIONAL ENGINEER

11.03.2023

DYRON MURPHY ARCHITECTS, P.C.
4505 Montbel Place NE, Albuquerque, New Mexico 87107

SHIPROCK PINNACLE HOTEL & RESTAURANT

SHIPROCK, NEW MEXICO

100% CONSTRUCTION DOCUMENTS

ISSUED FOR CONSTRUCTION

NOVEMBER 3, 2023

PROJECT NUMBER	DRAWN BY	PROJ MGR
2022.10	IMEG	IMEG

PLUMBING DETAILS

Sheet Title

Sheet Number

of

P501

11/3/2023 12:44:59 PM
Autodesk Docs://23002327.00 - Shiprock Pinnacle Hotel & Restaurant/MEP/2_23002327.00_Shiprock Pinnacle Hotel_C.rvt
DYRON MURPHY ARCHITECTS, P.C.

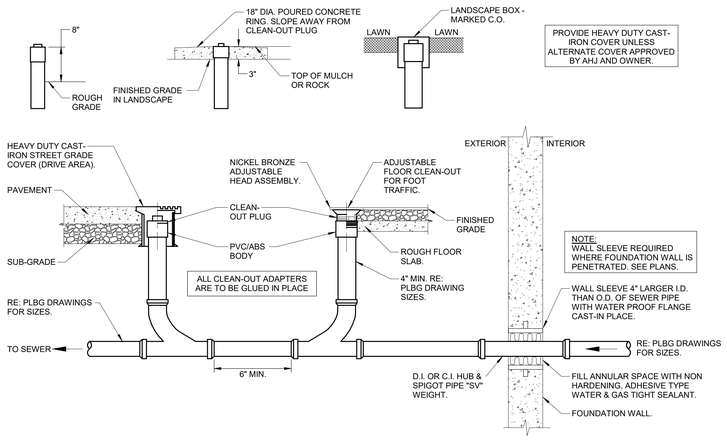

1 YARD CLEANOUT - TWO-WAY
NO SCALE

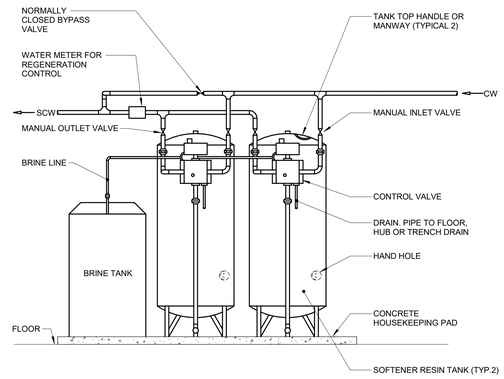

2 WATER SOFTENER
NO SCALE

PROVIDE WATER HAMMER ARRESTER (WHA-#) AT PLUMBING FIXTURES AND QUICK CLOSING VALVES AS INDICATED ON DRAWINGS AND AS RECOMMENDED BY STANDARD PDI-WH201. REFER TO PLUMBING MATERIAL LIST FOR WATER HAMMER ARRESTER DESCRIPTION.

SINGLE / DOUBLE FIXTURE

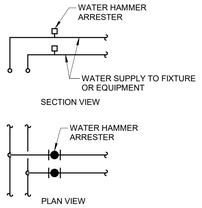

PDI SIZE	PIPE SIZE	FIXTURE UNIT LOAD
A	1/2"	1-11
B	3/4"	12-32
C	1"	33-60
D	1-1/4"	61-113
E	1-1/2"	114-154
F	2"	155-330

INSTALL WHA'S PER PDI STANDARDS AND MANUFACTURER'S INSTRUCTIONS. INSTALL IN HORIZONTAL OR VERTICAL POSITION, BUT NEVER UPSIDE DOWN. INSTALL IN LINE WITH WATER FLOW DIRECTION IF POSSIBLE. SIZE THE WHA AS SHOWN PER THE TABLES ABOVE. PROVIDE ACCESSIBILITY TO WHA WITH ACCESS PANEL OR INSTALL ABOVE ACCESSIBLE CEILING.

MULTIPLE FIXTURES

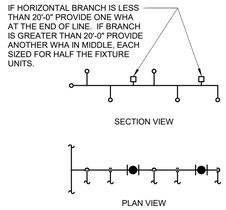

FIXTURE UNIT CALCULATION		
FIXTURE	COLD	HOT
WATER CLOSET (F.V.)	10	--
WATER CLOSET (TANK)	5	--
URINAL	5	--
LAVATORY	1.5	1.5
JANITOR'S SINK	3	3
SHOWER/BATHTUB	2	3
DRINKING FOUNTAIN	2	-
KITCHEN SINK	2	2
ICE MAKER / BEVERAGE	1	-

3 WATER HAMMER LOCATION AND SCHEDULE
12" = 1'-0"

IMEG
9000 E PIMA CENTER PARKWAY
SUITE 320
SCOTTSDALE, AZ 85258
P: 480.222.3771
www.imegcorp.com

IMEG CORP. RESERVES PROPRIETARY RIGHTS, INCLUDING COPYRIGHTS, TO THIS DRAWING AND THE DATA SHOWN THEREON. SAID DRAWING AND/OR DATA ARE THE EXCLUSIVE PROPERTY OF IMEG CORP. AND SHALL NOT BE USED OR REPRODUCED FOR ANY OTHER PROJECT WITHOUT THE EXPRESS WRITTEN APPROVAL AND PARTICIPATION OF IMEG CORP. ©2023 IMEG CORP.

0 1 2 3
REF. SCALE IN INCHES
PROJECT #23002327.00

STAMP

BENJAMIN W. YEUNG
NEW MEXICO
LICENSED PROFESSIONAL ENGINEER

11.03.2023

DYRON MURPHY ARCHITECTS, P.C.
4505 Montbel Place NE, Albuquerque, New Mexico 87107

SHIPROCK PINNACLE HOTEL & RESTAURANT

SHIPROCK, NEW MEXICO

100% CONSTRUCTION DOCUMENTS

ISSUED FOR CONSTRUCTION

NOVEMBER 3, 2023

PROJECT NUMBER	DRAWN BY	PROJ MGR
2022.10	IMEG	IMEG

PLUMBING DETAILS

Sheet Title

Sheet Number

of

P502

11/3/2023 12:44:39 PM
Autodesk Docs://23002327.00 - Shiprock Pinnacle Hotel & Restaurant/MEP/P2_23002327.00_Shiprock Pinnacle Hotel_C.rvt
DYRON MURPHY ARCHITECTS, P.C.

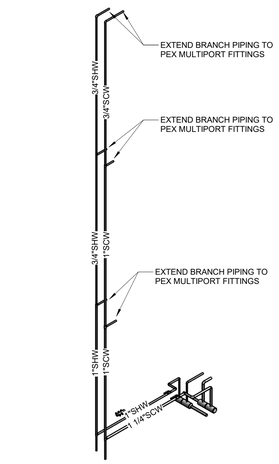

1 KING RM WATER RISER
NO SCALE

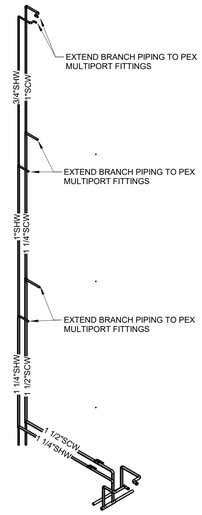

2 B2B DBL QN & KING WATER RISER
NO SCALE

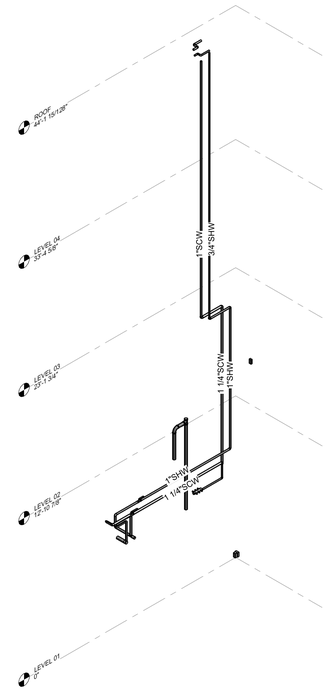

3 ADA KING AND QN WATER RISER
NO SCALE

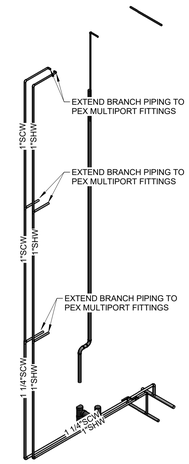

4 DBL QN ADA WATER RISER
NO SCALE

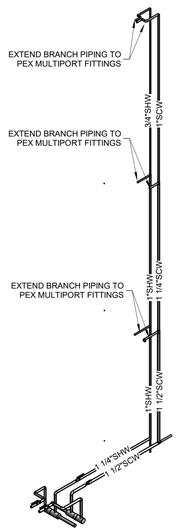

5 SINGLE DBL QN WATER RISER
NO SCALE

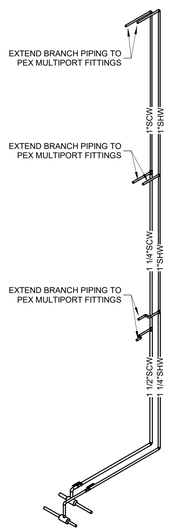

6 DBL QN GUEST UNITS WATER RISER
NO SCALE

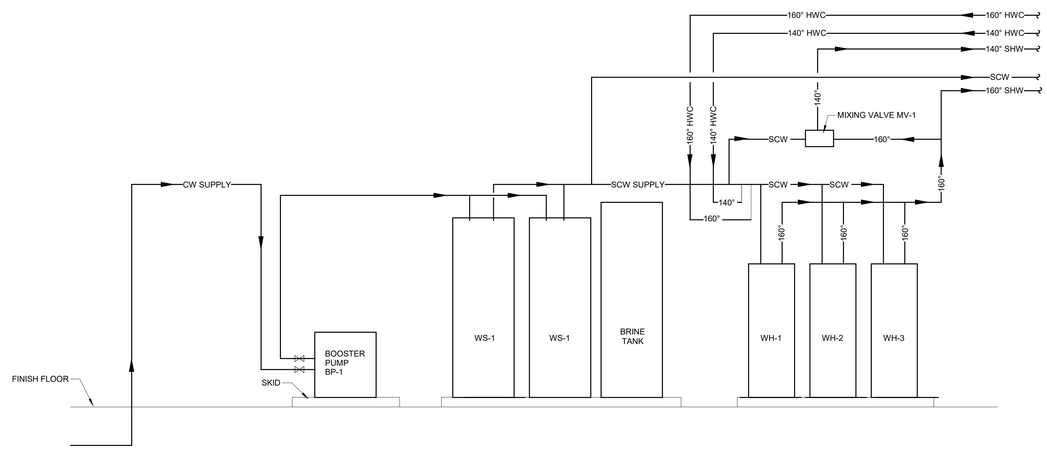

7 MECH ROOM WATER DIAGRAM
NO SCALE

IMEG
www.imegcorp.com
5000 E PIMA CENTER PARKWAY
SUITE 320
SCOTTSDALE, AZ 85258
P: 480.222.3771

IMEG CORP. RESERVES PROPRIETARY RIGHTS, INCLUDING COPYRIGHTS, TO THIS DRAWING AND THE DATA SHOWN THEREON. SAID DRAWING AND THE DATA ARE THE EXCLUSIVE PROPERTY OF IMEG CORP. AND SHALL NOT BE REPRODUCED FOR ANY OTHER PROJECT WITHOUT THE EXPRESS WRITTEN APPROVAL AND PARTICIPATION OF IMEG CORP. ©2023 IMEG CORP.

0 1 2 3
REF. SCALE IN INCHES
PROJECT #23002327.00

STAMP

11.03.2023

DYRON MURPHY ARCHITECTS, P.C.

4505 Montbel Place NE, Albuquerque, New Mexico 87107

SHIPROCK PINNACLE HOTEL & RESTAURANT

SHIPROCK, NEW MEXICO

100% CONSTRUCTION DOCUMENTS

ISSUED FOR CONSTRUCTION

NOVEMBER 3, 2023

PROJECT NUMBER	DRAWN BY	PROJ MGR
2022.10	IMEG	IMEG

PLUMBING DIAGRAMS

Sheet Title

Sheet Number

of

P503

11/3/2023 12:44:42 PM
Autodesk Docs://23002327.00 - Shiprock Pinnacle Hotel & Restaurant/MEP22_23002327.00_Shiprock Pinnacle Hotel_C.rvt
DYRON MURPHY ARCHITECTS, P.C.

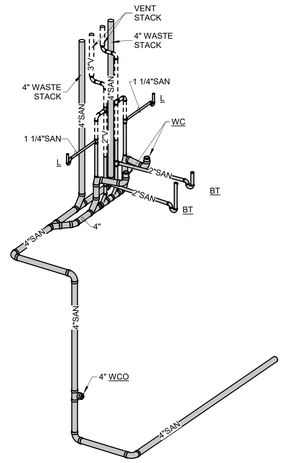

1 WASTE AND VENT ISOMETRIC #1
NO SCALE

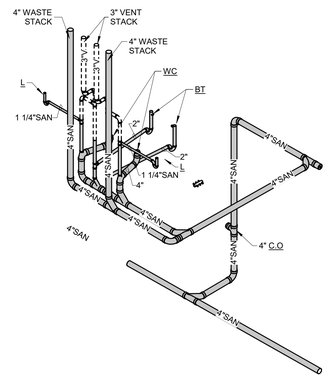

2 WASTE AND VENT ISOMETRIC #2
NO SCALE

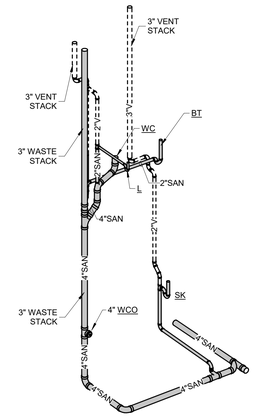

3 WASTE AND VENT ISOMETRIC #3
NO SCALE

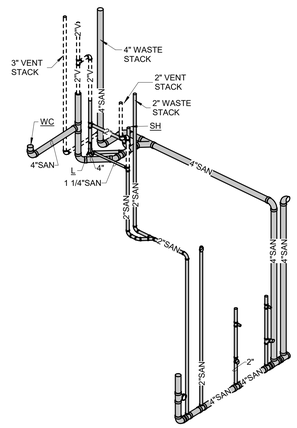

4 WASTE AND VENT ISOMETRIC #4
NO SCALE

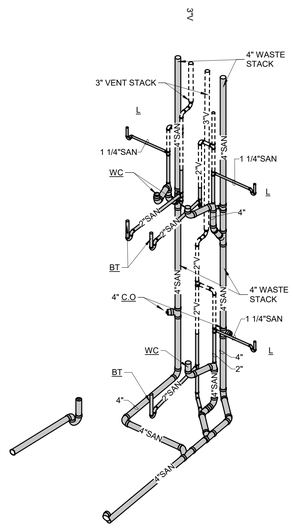

5 WASTE AND VENT ISOMETRIC #5
NO SCALE

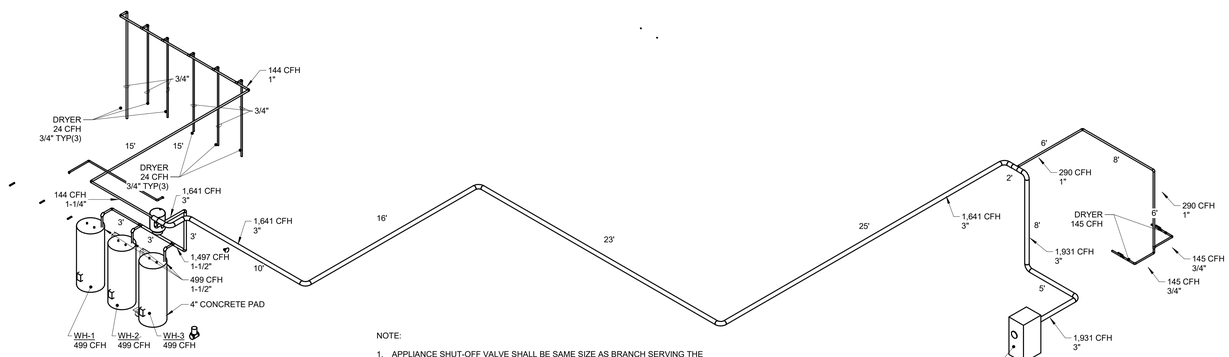

NOTE:

1. APPLIANCE SHUT-OFF VALVE SHALL BE SAME SIZE AS BRANCH SERVING THE APPLIANCE. REDUCE TO EQUIPMENT CONNECTION SIZE (IF NEEDED) DOWNSTREAM OF THE APPLIANCE VALVE.
2. LOW PRESSURE GAS PIPING (ABOVE GROUND) SIZED PER IFGC.
3. PIPE LENGTHS INDICATED ARE FOR PIPE SIZING AND PLANS REVIEW PURPOSES AND ARE NOT INTENDED AS A BILL OF MATERIAL NEEDED.

GAS CALCULATION
UPC TABLE 1215.2(1)
1,979 CFH @ 140 TDL

6 HOTEL GAS ISOMETRIC DIAGRAM
NO SCALE

IMEG
9000 E PIMA CENTER PARKWAY
SUITE 320
SCOTTSDALE, AZ 85258
P: 480.222.3771
www.imegcorp.com

IMEG CORP. RESERVES PROPRIETARY RIGHTS, INCLUDING COPYRIGHTS, TO THIS DRAWING AND THE DATA SHOWN THEREON. SAID DRAWING AND/OR DATA ARE THE EXCLUSIVE PROPERTY OF IMEG CORP. AND SHALL NOT BE USED OR REPRODUCED FOR ANY OTHER PROJECT WITHOUT THE EXPRESS WRITTEN APPROVAL AND PARTICIPATION OF IMEG CORP. ©2023 IMEG CORP.

0 1 2 3
REF. SCALE IN INCHES

PROJECT #23002327.00

STAMP

11.03.2023

DYRON MURPHY ARCHITECTS, P.C.
4505 Montbel Place NE, Albuquerque, New Mexico 87107

SHIPROCK PINNACLE HOTEL & RESTAURANT

SHIPROCK, NEW MEXICO

100% CONSTRUCTION DOCUMENTS

ISSUED FOR CONSTRUCTION

NOVEMBER 3, 2023

PROJECT NUMBER	DRAWN BY	PROJ MGR
2022.10	IMEG	IMEG

PLUMBING ISOMETRICS

Sheet Title

Sheet Number

of

P504

11/3/2023 12:44:48 PM Autodesk Docs://23002327.00 - Shiprock Pinnacle Hotel & Restaurant/MEP/23_23002327.00_Shiprock Pinnacle Hotel_C.rvt
DYRON MURPHY ARCHITECTS, P.C.

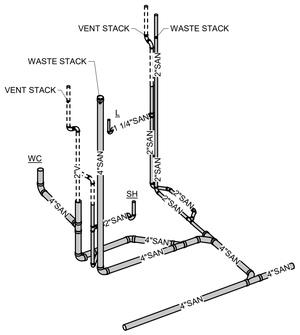

1 **WASTE AND VENT ISOMETRIC #6**
NO SCALE

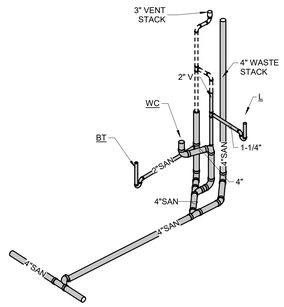

2 **WASTE AND VENT ISOMETRIC #7**
NO SCALE

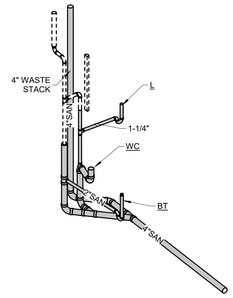

3 **WASTE AND VENT ISOMETRIC #8**
NO SCALE

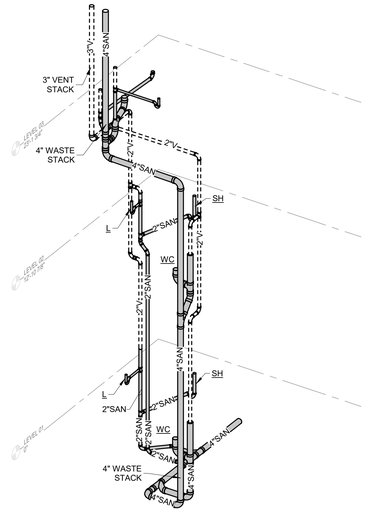

4 **WASTE AND VENT ISOMETRIC #9**
NO SCALE

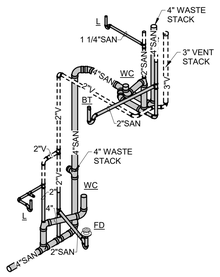

5 **WASTE AND VENT ISOMETRIC #10**
NO SCALE

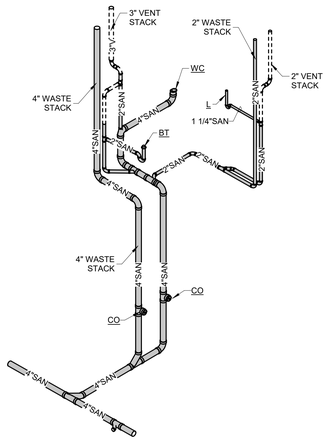

6 **WASTE AND VENT ISOMETRIC #11**
NO SCALE

IMEG
9000 E PIMA CENTER PARKWAY
SUITE 320
SCOTTSDALE, AZ 85258
P: 480.222.3771
www.imegcorp.com

IMEG CORP. RESERVES PROPRIETARY RIGHTS, INCLUDING COPYRIGHTS, TO THIS DRAWING AND THE DATA SHOWN THEREON. SAID DRAWING AND/OR DATA ARE THE EXCLUSIVE PROPERTY OF IMEG CORP., AND SHALL NOT BE USED OR REPRODUCED FOR ANY OTHER PROJECT WITHOUT THE EXPRESS WRITTEN APPROVAL AND PARTICIPATION OF IMEG CORP. ©2023 IMEG CORP.

0 1 2 3
REF. SCALE IN INCHES PROJECT #23002327.00

STAMP

11.03.2023

DYRON MURPHY ARCHITECTS, P.C.
4505 Montbel Place NE, Albuquerque, New Mexico 87107

SHIPROCK PINNACLE HOTEL & RESTAURANT

SHIPROCK, NEW MEXICO

100% CONSTRUCTION DOCUMENTS

ISSUED FOR CONSTRUCTION

NOVEMBER 3, 2023

PROJECT NUMBER	DRAWN BY	PROJ MGR
2022.10	IMEG	IMEG

PLUMBING ISOMETRICS

Sheet Title

Sheet Number of

P505

11/3/2023 12:44:54 PM Autodesk Docs://23002327.00 - Shiprock Pinnacle Hotel & Restaurant/MEP2_23002327.00_Shiprock Pinnacle Hotel_C.rvt
DYRON MURPHY ARCHITECTS, P.C.

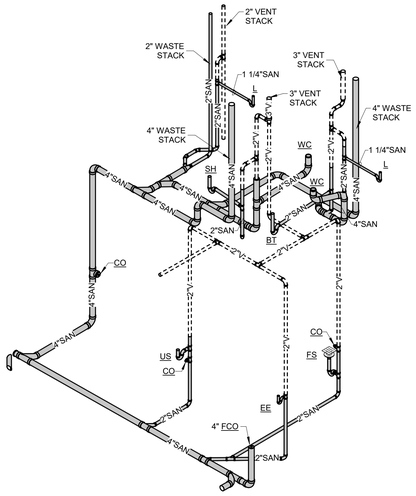

1 **WASTE AND VENT ISOMETRIC #12**
NO SCALE

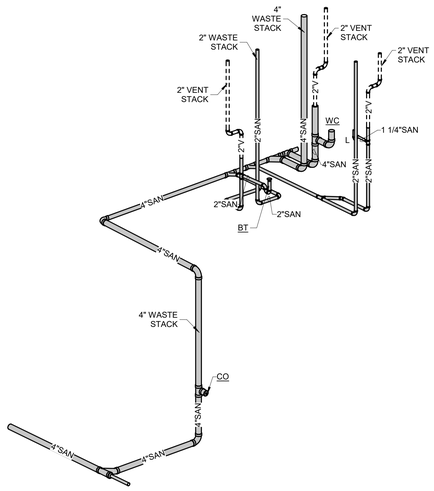

2 **WASTE AND VENT ISOMETRIC #13**
NO SCALE

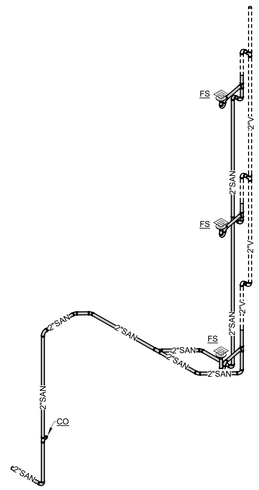

3 **WASTE AND VENT ISOMETRIC #14**
NO SCALE

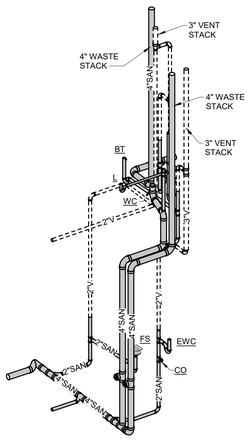

4 **WASTE AND VENT ISOMETRIC #15**
NO SCALE

IMEG
9000 E PIMA CENTER PARKWAY
SUITE 320
SCOTTSDALE, AZ 85258
P: 480.222.3771
www.imegcorp.com

IMEG CORP. RESERVES PROPRIETARY RIGHTS, INCLUDING COPYRIGHTS, TO THIS DRAWING AND THE DATA SHOWN THEREON. SAID DRAWING AND/OR DATA ARE THE EXCLUSIVE PROPERTY OF IMEG CORP. AND SHALL NOT BE USED OR REPRODUCED FOR ANY OTHER PROJECT WITHOUT THE EXPRESS WRITTEN APPROVAL AND PARTICIPATION OF IMEG CORP. ©2023 IMEG CORP.

0 1 2 3
REF. SCALE IN INCHES
PROJECT #23002327.00

STAMP

11.03.2023

DYRON MURPHY ARCHITECTS, P.C.

4505 Montbel Place NE, Albuquerque, New Mexico 87107

SHIPROCK PINNACLE HOTEL & RESTAURANT

SHIPROCK, NEW MEXICO

100% CONSTRUCTION DOCUMENTS

ISSUED FOR CONSTRUCTION

NOVEMBER 3, 2023

PROJECT NUMBER	DRAWN BY	PROJ MGR
2022.10	IMEG	IMEG

PLUMBING ISOMETRICS

Sheet Title

Sheet Number of

P506

11/3/2023 12:44:59 PM Autodesk Docs://23002327.00 - Shiprock Pinnacle Hotel & Restaurant/MEP/2_23002327.00_Shiprock Pinnacle Hotel_C.rvt
DYRON MURPHY ARCHITECTS, P.C.

PLUMBING MATERIAL LIST

TAG NAME	DESCRIPTION	MANUFACTURER AND MODEL
WC-1	WATER CLOSET - FLOOR MOUNTED, FLUSH VALVE TYPE, WHITE VITREOUS CHINA, SIPHON JET, WATER SAVING, ELONGATED BOWL, 1-1/2" TOP SPUD, BOLT CAPS. FLUSH VALVE - EXPOSED, WALL MOUNTED SENSOR OPERATION, HARD WIRED, 1.6 GALLONS PER FLUSH, 11-1/2" ROUGH-IN, CHROME PLATED, 1" I.P.S. SCREWDRIVER STOP-CHECK VALVE WITH VANDAL RESISTANT CAP, HIGH BACK PRESSURE VACUUM BREAKER, ADJUSTABLE TAILPIECE, SPUD COUPLING AND FLANGE, WALL FLANGE WITH SET SCREW, MECHANICAL OVER-RIDE BUTTON, CHLORAMINE RESISTANT MATERIALS, CHROME PLATED COVER PLATE WITH TAMPER-PROOF SCREWS, TRANSFORMER CAPABLE OF OPERATING UP TO 10 UNITS, LOW VOLTAGE WIRING FROM TRANSFORMER TO EACH FLUSH VALVE, ADA COMPLIANT, 3 YEAR WARRANTY. ELECTRICAL REQUIREMENTS - 120VAC INPUT [ELECTRONIC SENSOR FLUSH VALVES SHALL HAVE PROGRAMMABLE AUTOMATIC FLUSH SET FOR [1 FLUSH PER DAY].] SEAT - WHITE, EXTRA HEAVY, OPEN FRONT, INJECTION MOLDED SOLID PLASTIC, SELF-SUSTAINING HINGE, STAINLESS STEEL OR PLATED STEEL POSTS AND NUTS. CONTRACTOR OPTION: COMBINATION WATER CLOSET/FLUSH VALVE PACKAGED SYSTEM BY AMERICAN STANDARD, KOHLER, SLOAN, OR ZURN TOP OF SEAT SHALL BE AT 16"-17" ABOVE FINISHED FLOOR. FLUSH HANDLE SHALL BE LOCATED ON THE WIDE SIDE OF THE TOILET STALL AND BE 12" (MAXIMUM) ABOVE BOWL RIM AND OPERATE WITH NO GREATER THAN 5 LB FORCE IN COMPLIANCE WITH LATEST ADA STANDARDS. VERIFY EQUIPMENT REQUIREMENTS AND ROUGH-IN LOCATIONS.	WATER CLOSET - AMERICAN STANDARD (2234.001), GERBER (25-830), KOHLER (K-96053-0), SLOAN (ST-2003), ZURN (Z5650) FLUSH VALVE - ZURN (ZEMS6000AV), SLOAN (111 ES-S), AMERICAN STANDARD (6067.161), DELANY (1302), HYDROTEK (H-8000C), MOEN (8310AC16), AMTC (AEF-801-HWCT-16) SEAT - SAME AS WATER CLOSET MANUFACTURER
WC-2	WATER CLOSET - ACCESSIBLE, FLOOR MOUNTED, FLUSH VALVE TYPE, WHITE VITREOUS CHINA, SIPHON JET, WATER SAVING, ELONGATED BOWL, 1-1/2" TOP SPUD, BOLT CAPS. FLUSH VALVE - EXPOSED, WALL MOUNTED SENSOR OPERATION, HARD WIRED, 1.6 GALLONS PER FLUSH, 11-1/2" ROUGH-IN, CHROME PLATED, 1" I.P.S. SCREWDRIVER STOP-CHECK VALVE WITH VANDAL RESISTANT CAP, HIGH BACK PRESSURE VACUUM BREAKER, ADJUSTABLE TAILPIECE, SPUD COUPLING AND FLANGE, WALL FLANGE WITH SET SCREW, MECHANICAL OVER-RIDE BUTTON, CHLORAMINE RESISTANT MATERIALS, CHROME PLATED COVER PLATE WITH TAMPER-PROOF SCREWS, TRANSFORMER CAPABLE OF OPERATING UP TO 10 UNITS, LOW VOLTAGE WIRING FROM TRANSFORMER TO EACH FLUSH VALVE, ADA COMPLIANT, 3 YEAR WARRANTY. ELECTRICAL REQUIREMENTS - 120VAC INPUT SEAT - WHITE, EXTRA HEAVY, OPEN FRONT, INJECTION MOLDED SOLID [ANTI-MICROBIAL] PLASTIC, SELF-SUSTAINING HINGE, STAINLESS STEEL OR PLATED STEEL POSTS AND NUTS. CONTRACTOR OPTION: COMBINATION WATER CLOSET/FLUSH VALVE PACKAGED SYSTEM BY AMERICAN STANDARD, KOHLER, SLOAN, OR ZURN TOP OF SEAT SHALL BE AT 17"-19" ABOVE FINISHED FLOOR. FLUSH HANDLE SHALL BE LOCATED ON THE WIDE SIDE OF THE TOILET STALL AND BE 12" (MAXIMUM) ABOVE BOWL RIM AND OPERATE WITH NO GREATER THAN 5 LB FORCE IN COMPLIANCE WITH LATEST ADA STANDARDS. VERIFY EQUIPMENT REQUIREMENTS AND ROUGH-IN LOCATIONS.	WATER CLOSET - AMERICAN STANDARD (3043.001), CRANE (3H701), GERBER (25-730), KOHLER (K-96057-0), SLOAN (ST-2023), ZURN (Z5660) FLUSH VALVE - ZURN (ZEMS6000AV), SLOAN (111 ES-S), AMERICAN STANDARD (6067.161), DELANY (1302), HYDROTEK (H-8000C), MOEN (8310AC16), AMTC (AEF-801-HWCT-16)
WC-3	WATER CLOSET - FLOOR MOUNTED, TANK TYPE, TWO PIECE DESIGN, WHITE VITREOUS CHINA, ELONGATED BOWL, BOLT CAPS, 12" ROUGH-IN, CHROME PLATED TRIP LEVER, 1.28 GALLONS PER FLUSH (MAXIMUM) IN COMPLIANCE WITH ENERGY POLICY ACT OF 1992. SEAT - WHITE, SLOW CLOSING, SOLID PLASTIC, CLOSED FRONT SEAT WITH COVER. ACCESSORIES - QUARTER-TURN ANGLE STOP AND BRAIDED STAINLESS STEEL SUPPLY. TOP OF SEAT SHALL BE AT 16"-17" ABOVE FINISHED FLOOR. FLUSH HANDLE SHALL BE LOCATED ON THE WIDE SIDE OF THE TOILET STALL AND OPERATE WITH NO GREATER THAN A 5 LB FORCE IN COMPLIANCE WITH LATEST ADA STANDARDS. VERIFY EQUIPMENT REQUIREMENTS AND ROUGH-IN LOCATIONS.	WATER CLOSET - KOHLER (K-4198), TOILER TANK - KOHLER (K-4467) SEAT - KOHLER (K-7671)
WC-4	WATER CLOSET - ACCESSIBLE, FLOOR MOUNTED, WHITE VITREOUS CHINA, CLOSE COUPLED, ELONGATED BOWL, CHROME PLATED TRIP LEVER, 1.28 GALLONS PER FLUSH (MAXIMUM) IN COMPLIANCE WITH ENERGY POLICY ACT OF 1992. SEAT - WHITE, SLOW CLOSING, SOLID PLASTIC, CLOSED FRONT SEAT WITH COVER. ACCESSORIES - 1/4 TURN ANGLE STOP AND BRAIDED STAINLESS STEEL SUPPLY. INSTALL TO ADA REQUIREMENTS, REFER TO ARCHITECT'S ACCESSIBILITY DETAILS PRIOR TO ROUGH-IN. TOP OF SEAT SHALL BE AT 17"-19" ABOVE FINISHED FLOOR. FLUSH HANDLE SHALL BE LOCATED ON THE WIDE SIDE OF THE TOILET STALL AND OPERATE WITH NO GREATER THAN A 5 LB FORCE IN COMPLIANCE WITH LATEST ADA STANDARDS. VERIFY EQUIPMENT REQUIREMENTS AND ROUGH-IN LOCATIONS.	WATER CLOSET - KOHLER (K-3999) OR (K-3999RA) SEAT - KOHLER (K-7671)
WCO-1 *	TBD	TBD
WH-1	WATER HEATER - GAS FIRED, CONDENSING, VERTICAL, MINIMUM 94% EFFICIENT, SEALED COMBUSTION, METAL CABINET, BAKED ENAMEL FINISH, ASME STAMPED GLASS-LINED STEEL OR STAINLESS STEEL TANK, 160 PSI WORKING PRESSURE, FIBERGLASS OR FOAM INSULATION, BRASS WATER CONNECTIONS AND DRAIN VALVE, ASME APPROVED T&P RELIEF VALVE, MULTIPLE MAGNESIUM ANODE RODS, VENT PIPING KIT, HIGH TEMPERATURE GAS SHUT OFF, AUTOMATIC WATER THERMOSTAT, BUILT-IN GAS REGULATING VALVE, ADJUSTABLE TEMPERATURE RANGE, 3-YEAR WARRANTY, UL LISTED, COMPLIANT TO NAECA, ASHRAE 90.1 AND ASHRAE 90A. 115 GALLON CAPACITY, 499,900 BTUH INPUT NATURAL GAS, 683 GPH RECOVERY AT 100°F RISE. PROVIDE AN EMERGENCY STOP SWITCH LOCATED NEAR THE EXIT DOOR AND WIRING BACK TO THE WATER HEATER MEETING THE REQUIREMENTS OF ASME CSD-1. ELECTRICAL REQUIREMENTS - 120V CIRCUIT FOR BLOWER AND CONTROLS, HARD-WIRED SET WATER TEMPERATURE AT 140°F. SET SUPPLY GAS PRESSURE AT 7" W.C. CONDENSATE DRAIN NEUTRALIZATION TANK - RATED FOR MAXIMUM 4,000 MBH WATER HEATER AND 32 GPH CONDENSATE FLOW, POLYPROPYLENE RECTANGULAR TANK, 1"FNPT INLET AND OUTLET, REMOVABLE ACCESS COVER FOR CLEANING AND PELLET REPLACEMENT, 12.5 LBS PH NEUTRALIZING PELLETS.	CAMUS HYDRONICS (VTECH VT-499) NEUTRALIZATION TANK - JJM BOILER WORKS (NB-4), NUTRASAFE (CN4T)
WH-2	WATER HEATER - GAS FIRED, CONDENSING, VERTICAL, MINIMUM 94% EFFICIENT, SEALED COMBUSTION, METAL CABINET, BAKED ENAMEL FINISH, ASME STAMPED GLASS-LINED STEEL OR STAINLESS STEEL TANK, 160 PSI WORKING PRESSURE, FIBERGLASS OR FOAM INSULATION, BRASS WATER CONNECTIONS AND DRAIN VALVE, ASME APPROVED T&P RELIEF VALVE, MULTIPLE MAGNESIUM ANODE RODS, VENT PIPING KIT, HIGH TEMPERATURE GAS SHUT OFF, AUTOMATIC WATER THERMOSTAT, BUILT-IN GAS REGULATING VALVE, ADJUSTABLE TEMPERATURE RANGE, 3-YEAR WARRANTY, UL LISTED, COMPLIANT TO NAECA, ASHRAE 90.1 AND ASHRAE 90A. 115 GALLON CAPACITY, 499,900 BTUH INPUT NATURAL GAS, 576 GPH RECOVERY AT 100°F RISE. PROVIDE AN EMERGENCY STOP SWITCH LOCATED NEAR THE EXIT DOOR AND WIRING BACK TO THE WATER HEATER MEETING THE REQUIREMENTS OF ASME CSD-1. ELECTRICAL REQUIREMENTS - 120V CIRCUIT FOR BLOWER AND CONTROLS, HARD-WIRED SET WATER TEMPERATURE AT 140°F. SET SUPPLY GAS PRESSURE AT 7" W.C. CONDENSATE DRAIN NEUTRALIZATION TANK - RATED FOR MAXIMUM 4,000 MBH WATER HEATER AND 32 GPH CONDENSATE FLOW, POLYPROPYLENE RECTANGULAR TANK, 1"FNPT INLET AND OUTLET, REMOVABLE ACCESS COVER FOR CLEANING AND PELLET REPLACEMENT, 12.5 LBS PH NEUTRALIZING PELLETS.	CAMUS HYDRONICS (VTECH VT-499) NEUTRALIZATION TANK - JJM BOILER WORKS (NB-4), NUTRASAFE (CN4T)
WH-3	WATER HEATER - GAS FIRED, CONDENSING, VERTICAL, MINIMUM 94% EFFICIENT, SEALED COMBUSTION, METAL CABINET, BAKED ENAMEL FINISH, ASME STAMPED GLASS-LINED STEEL OR STAINLESS STEEL TANK, 160 PSI WORKING PRESSURE, FIBERGLASS OR FOAM INSULATION, BRASS WATER CONNECTIONS AND DRAIN VALVE, ASME APPROVED T&P RELIEF VALVE, MULTIPLE MAGNESIUM ANODE RODS, VENT PIPING KIT, HIGH TEMPERATURE GAS SHUT OFF, AUTOMATIC WATER THERMOSTAT, BUILT-IN GAS REGULATING VALVE, ADJUSTABLE TEMPERATURE RANGE, 3-YEAR WARRANTY, UL LISTED, COMPLIANT TO NAECA, ASHRAE 90.1 AND ASHRAE 90A. 115 GALLON CAPACITY, 499,900 BTUH INPUT NATURAL GAS, 683 GPH RECOVERY AT 100°F RISE. PROVIDE AN EMERGENCY STOP SWITCH LOCATED NEAR THE EXIT DOOR AND WIRING BACK TO THE WATER HEATER MEETING THE REQUIREMENTS OF ASME CSD-1. ELECTRICAL REQUIREMENTS - 120V CIRCUIT FOR BLOWER AND CONTROLS, HARD-WIRED SET WATER TEMPERATURE AT 140°F. SET SUPPLY GAS PRESSURE AT 7" W.C. CONDENSATE DRAIN NEUTRALIZATION TANK - RATED FOR MAXIMUM 4,000 MBH WATER HEATER AND 32 GPH CONDENSATE FLOW, POLYPROPYLENE RECTANGULAR TANK, 1"FNPT INLET AND OUTLET, REMOVABLE ACCESS COVER FOR CLEANING AND PELLET REPLACEMENT, 12.5 LBS PH NEUTRALIZING PELLETS.	CAMUS HYDRONICS (VTECH VT-499) NEUTRALIZATION TANK - JJM BOILER WORKS (NB-4), NUTRASAFE (CN4T)
WHA-1	WATER HAMMER ARRESTOR – PISTON TYPE. PRE-CHARGED WITH 60 PSIG AIR, LEAD FREE, COPPER BODY, BRASS OR HIGH HEAT POLY-PROPYLENE PISTON WITH DUAL EPDM O-RING SEALS LUBRICATED WITH FDA APPROVED SILICONE LUBRICANT. PDI CERTIFIED, A.S.S.E. 1010 APPROVED FOR SEALED WALL INSTALLATION, RATED FOR [1-11][12-32][33-60][61-113][114-154][155-300] FIXTURE UNITS. INSTALL PER MANUFACTURER'S RECOMMENDATIONS.	WATTS (LF15M2-DR), SIOUX CHIEF (650 SERIES), MIFAB (MWH), PPP (SC SERIES), ZURN WILKINS (1250XL), JR SMITH (5201-5250), WADE (WP5-100), JOSAM (75000-S)

PLUMBING MATERIAL LIST

TAG NAME	DESCRIPTION	MANUFACTURER AND MODEL
L-2	LAVATORY - (PUBLIC RESTROOMS), INTEGRAL COUNTERTOP. LAVATORY TRIM - SENSOR ACTIVATED MIXING FAUCET, BATTERY POWERED, BRASS CONSTRUCTION, BRUSHED NICKEL FINISH, CONVENTIONAL SPOUT WITH LAMINAR FLOW, SINGLE HOLE, PERFORATED GRID STRAINER WITH 1-1/4" 17 GAUGE TAILPIECE, SOLID BRASS SOLENOID WITH BUILT-IN FILTER, WATERPROOF CONNECTORS AND CABLE. MAXIMUM FLOW TO BE 0.5 GPM IN COMPLIANCE WITH ENERGY POLICY ACT OF 2005 AND ASME/ANSI STANDARD A112.18.1M. FAUCET SHALL COMPLY WITH FEDERAL ACT S.3874. PROVIDE RESTRICTIVE DEVICE AS REQUIRED. MOUNT MIXING VALVE UNDER COUNTER/LAVATORY. MIXING VALVE SHALL NOT BE WYE PATTERN STYLE. MIXING VALVE - POINT-OF-USE ANTI-SCALD THERMOSTATIC MIXING VALVE FOR TEMPERED WATER CONTROL, ALL BRONZE/BRASS CONSTRUCTION, ROUGH FINISH, THREADED INLETS, TAMPER RESISTANT SETPOINT, 3/8" COMPRESSION INLETS AND OUTLETS, COLD WATER BYPASS IF USED WITH MIXING FAUCET. CABINET - SURFACE MOUNTED 18 GAUGE STAINLESS STEEL CABINET WITH 16 GAUGE LOCKING DOOR TO ENCLOSE VALVE, INLET STOPS, OUTLET THERMOMETER, AND OUTLET VALVES. 0.5 GPM OUTPUT. UNIT TO MIX 140 DEGREE F HOT WATER SUPPLY AND 50 DEGREE F COLD WATER SUPPLY FOR 110 DEGREE F OUTLET. UNIT SHALL BE ASSE 1070 LISTED AND APPROVED. VALVE SHALL COMPLY WITH FEDERAL ACT S.3874. ELECTRONIC SENSOR FAUCETS SHALL HAVE PROGRAMMABLE AUTOMATIC FLUSH SET FOR 30 SECONDS ONCE PER DAY. INSULATION KIT - PRE-MANUFACTURED FOR P-TRAP, STOP VALVES, AND SUPPLY LINES. ACCESSORIES - QUARTER-TURN 3/8" CHROME PLATED HEAVY BRASS ANGLE SUPPLY STOPS, CHROME PLATED SOFT COPPER SUPPLY LINES, 1-1/4" 17 GAUGE CAST BRASS P-TRAP.	LAVATORY - INTEGRAL COUNTER LAVATORY TRIM - AMERICAN STANDARD (775B.205/PK00.WRK), THERMOSTATIC MIXER - WATTS LFUSG, SYMMONS 7-210-CK, POWERS LFG-480 INSULATION KIT - TRUEBRO (LAV-GUARD), BROCAR PRODUCTS (TRAP WRAP), MCGUIRE (PROWRAP), PLUMBEREX (PRO-EXTREME)
MB-1	MOP BASIN - MOLDED STONE, WHITE WITH BLACK ACCENTS, 36"x24"x10", STAINLESS STEEL DRAIN WITH COMBINATION DOME STRAINER AND LINT BASKET, 3" OUTLET, VINYL BUMPER GUARD ON EXPOSED SIDES. TRIM - EXPOSED TWO HANDLE MIXING FAUCET, BRASS CONSTRUCTION, CHROME-PLATED FINISH, SINGLE WING HANDLES, 1/4 TURN CERAMIC DISC CARTRIDGE, 3/4" HOSE THREAD SPOUT WITH ASSE 1053 RATED INTEGRAL VACUUM BREAKER, WALL BRACE, PAIL HOOK, CHECK STOPS OR INLINE CHECK VALVES TO PREVENT THERMAL CROSSOVER. FAUCET SHALL COMPLY WITH FEDERAL ACT S.3874. ACCESSORIES - MOP HANGER, HOSE AND HOSE BRACKET, TRAP TWO 24" WIDE STAINLESS STEEL WALL GUARD	MOP BASIN - FIAT (MSB), WILLIAMS (MTB), SWAN (MS), ZURN (Z-1996), MUSTEE (63M) TRIM - DELTA (28C2383), AMERICAN STANDARD (8344.012), CHICAGO FAUCETS (897-CP), MOEN (8124), SPEAKMAN (SC-5812), SYMMONS (S-2490), ZURN (Z841M1-XL) VACUUM BREAKER - WATTS (8A), OR APPROVED EQUAL
MV-1	MIXING VALVE - MULTIPLE HILO MASTER THERMOSTATIC MIXING VALVE ARRANGEMENT FOR TEMPERED WATER CONTROL, ALL BRONZE/BRASS CONSTRUCTION, ROUGH BRASS FINISH, UNION INLETS WITH STRAINERS, COMBINATION CHECK STOPS OR SEPARATE SUPPLY CHECK VALVES AND SHUT OFF VALVES, DIAL THERMOMETER ON OUTLET [AND INLETS]. RATED FOR 138 GPM OUTPUT MAXIMUM AT 5 PSI DIFFERENTIAL AND 10 GPM OUTPUT MINIMUM BASED UPON CONTINUOUS RECIRCULATION. UNIT TO MIX 160 DEGREE F HOT WATER SUPPLY AND 50 DEGREE F COLD WATER SUPPLY FOR 140 DEGREE F OUTLET. PROVIDE FIELD ADJUSTMENT BY FACTORY AUTHORIZED REPRESENTATIVE. UNIT SHALL BE ASSE 1017 LISTED AND APPROVED. ASSEMBLY SHALL COMPLY WITH FEDERAL ACT S.3874.	LEONARD (XL-200-SW-2PS-LF)
P-1	TBD	TBD
SH-1	SHOWER- GUEST UNITS, . SHOWER VALVE - SINGLE HANDLE PRESSURE BALANCED MIXING FAUCET, BRASS OR BRONZE CONSTRUCTION, CAST METAL LEVER HANDLE, WASHERLESS DESIGN, OFF-COLD-HOT TEMPERATURE RANGE INDICATOR DIAL, INTEGRAL CHECK STOPS, ADJUSTABLE TEMPERATURE LIMIT STOP. ASSE 1016 LISTED. ACCESSORIES - CLASSIC BRUSHED NICKEL FINISH SHOWERHEAD WITH SWIVEL BALL JOINT, ADJUSTABLE SPRAY, CHROME-PLATED BRASS ARM AND FLANGE. INSTALL BOTTOM OF SHOWERHEAD AT 72" ABOVE FINISHED FLOOR. MAXIMUM FLOW TO BE 2.5 GPM IN COMPLIANCE WITH ENERGY POLICY ACT OF 2005 AND ASME/ANSI STANDARD A112.18.1M. SET SAFETY LIMIT STOP TO 110 DEGREE F DISCHARGE.	SHOWER - SEE ARCHITECTURAL SHOWER VALVE - MOEN COMMERCIAL (T8375NHCBN), SHOWERHEAD - MOEN COMMERCIAL (5263CBN)
SH-2	SHOWER - ACCESSIBLE, ADA GUEST UNITS, SHOWER VALVE - ACCESSIBLE, SINGLE HANDLE PRESSURE BALANCED MIXING FAUCET, BRASS OR BRONZE CONSTRUCTION, WASHERLESS DESIGN, OFF-COLD-HOT TEMPERATURE RANGE INDICATOR DIAL, POLISHED CHROME CAST METAL LEVER HANDLE, INTEGRAL CHECK STOPS, ADJUSTABLE TEMPERATURE LIMIT STOP. ASSE 1016 LISTED. ACCESSORIES - CLASSIC BRUSHED NICKEL SHOWERHEAD WITH SWIVEL BALL JOINT, , HAND HELD SHOWER WITH ON/OFF CONTROL AND NON-POSITIVE SHUT OFF, 69" METAL HOSE, SWIVEL CONNECTOR, 36" CLASSIC BRUSHED NICKEL FINISH MOUNTING RAIL, PLY ELBOW FLANGE. PROVIDE DIVERTER VALVE WITH MATCHING TRIM PLATE FOR CONTROL OF WATER TO FIXED OR HAND SHOWER. INSTALL ALL CONTROLS BETWEEN 38" AND 48" ABOVE FINISHED FLOOR IN COMPLIANCE WITH LATEST ADA STANDARDS. MAXIMUM FLOW TO BE 2.5 GPM IN COMPLIANCE WITH ENERGY POLICY ACT OF 2005 AND ASME/ANSI STANDARD A112.18.1M. SET SAFETY LIMIT STOP TO 110 DEGREE F DISCHARGE.	SHOWER - SEE ARCHITECTURAL SHOWER VALVE - MOEN COMMERCIAL (52236GBM15CBN)
SK-1	SINK - ACCESSIBLE, UNDERMOUNT, SINGLE COMPARTMENT, 18 GAUGE TYPE 304 STAINLESS STEEL, 21" (SIDE-TO-SIDE) x 15-3/4" (FRONT-TO-BACK) OVERALL SIZE, 23-1/2" x 18-1/4" x 5-3/8" DEEP BOWL, COMPLETELY UNDERCOATED, 3-1/2" DIAMETER DRAIN OUTLET LOCATION REAR CENTER IN BOWL, POLISHED STAINLESS STEEL FINISH DRAIN. SINK TRIM - COMPACT PULL DOWN FAUCET, 3 FUNCTION SPRAYHEAD, 1.5 GPM MAX FLOW RATE, GOOSENECK SPOUT AND 360° SPOUT ROTATION, SINGLE OR THREE HOLE INSTALLATION. ACCESSORIES - OFFSET 1-1/2", BRAIDED STAINLESS STEEL SUPPLY WITH ANGLE STOP, SEMI CAST P-TRAP, INSTALL TO ADA REQUIREMENTS, REFER TO ARCHITECTURAL ACCESSIBLITIY DETAILS PRIOR TO ROUGH-IN. THERMOSTATIC MIXING VALVE ASSE 1070 APPROVED SET TEMP TO 120°F.	SINK - ELKAY (ELUHAD/LKAD18[LKAD35]), JUST (US-ADA/J-ADA-35-FS[J-ADA-35]), FRANKE (UCS) SINK TRIM - KOHLER (K597), THERMOSTATIC MIXER - WATTS LFUSG, SYMMONS 7-210-CK, POWERS LFG-480 [INSULATION KIT - MCGUIRE (PROWRAP), JUST (J-ADA), PLUMBEREX (PRO-EXTREME), TRUEBRO (LAV-GUARD2)]
SK-2	SINK - ACCESSIBLE, UNDERMOUNT, SINGLE COMPARTMENT, 18 GAUGE STAINLESS STEEL, OVERALL SIZE, 10-3/4" x 17-1/2" x 5-1/2" DEEP BOWL, COMPLETELY UNDERCOATED, 3-5/8" DIAMETER DRAIN OUTLET LOCATION CENTER IN BOWL, POLISHED STAINLESS STEEL FINISH DRAIN. SINK TRIM - COMPACT PULL DOWN FAUCET, 3 FUNCTION SPRAYHEAD, 1.5 GPM MAX FLOW RATE, GOOSENECK SPOUT AND 360° SPOUT ROTATION, SINGLE OR THREE HOLE INSTALLATION. ACCESSORIES - OFFSET 1-1/2", BRAIDED STAINLESS STEEL SUPPLY WITH ANGLE STOP, SEMI CAST P-TRAP, INSTALL TO ADA REQUIREMENTS, REFER TO ARCHITECTURAL ACCESSIBLITIY DETAILS PRIOR TO ROUGH-IN. ASSE 1070 APPROVED THERMOSTATIC MIXING VALVE, SET TEMP TO 120°F.	SINK - KOHLER (K-3333) SINK TRIM - AMERICAN STANDARD (6114.300), ELKAY (LK3000CR) THERMOSTATIC MIXER - WATTS LFUSG, SYMMONS 7-210-CK, POWERS LFG-480 [INSULATION KIT - MCGUIRE (PROWRAP), JUST (J-ADA), PLUMBEREX (PRO-EXTREME), TRUEBRO (LAV-GUARD2)]
SP-1	SUMP PUMP - SIMPLEX SUBMERSIBLE, SINGLE-STAGE, SINGLE SEAL, CENTRIFUGAL, END-SUCTION PUMP, STAINLESS STEEL FASTENERS, GUARDS AND HANDLES, UL LISTED. CASING - CAST IRON, INTEGRAL SUPPORT FEET, MINIMUM 2" VERTICAL DISCHARGE. IMPELLER: CAST IRON STATICALLY AND DYNAMICALLY BALANCED, SEMIOPEN NONCLOG DESIGN, KEYED AND SECURED TO SHAFT, PASSES 3/4" SOLIDS MINIMUM. SHAFT - STEEL OR STAINLESS STEEL WITH FACTORY SEALED, GREASE-LUBRICATED SLEEVE OR BALL BEARINGS, CARBON AND CERAMIC SEAL. MOTOR - 3450 RPM, OIL OR AIR-FILLED, HERMETICALLY SEALED WITH AUTO THERMAL OVERLOAD PROTECTION, THREE CONDUCTOR WATERPROOF POWER CABLE WITH GROUNDING PLUG, MAXIMUM LENGTH 6 FEET PER THE NATIONAL ELECTRICAL CODE, COORDINATE RECEPTACLE LOCATION WITH ELECTRICAL CONTRACTOR. CAPACITY: 50 GPM, 27 FEET OF HEAD. ELECTRICAL REQUIREMENTS - 1/2 HP, 120V, 1 PHASE CONTROLS - HYDROCARBON SENSING PUMP SWITCH WITH HIGH WATER ALARM, NEMA 4X ENCLOSURE, HIGH WATER FLOAT/CONTACT SWITCH WITH WATER PROOF CABLE OF SUFFICIENT LENGTH, HORN, STROBE, SILENCING BUTTON AND DRY CONTACTS FOR ALARM AND PUMP STATUS, 6 FOOT 120V POWER CORD, UL LISTED. FLOATS SHALL BE MERCURY-FREE.	PUMP - WEIL (1456 [-OSS]), ZOELLER (160 SERIES), BARNES (EH-L SERIES), GOULDS (HSU SERIES), STANCOR (SE), MYERS (ME50S-11) CONTROLS - WEIL (OIL SMART PUMP SWITCH AND OIL SMART ALARM SWITCH). SEEWATER OSS (SERIES/OSA-05), STANCOR (OIL MINDER), ZOELLER (940 SERIES)
TD-1	TRENCH DRAIN - POLYPROPYLENE, LINT FILTER, REMOVABLE LID, CHEMICAL RESISTANT	H-M COMPANY (DRAIN TROUGH)
UB-1	WASHING MACHINE FIXTURE - PVC/PLASTIC ENCLOSURE, 2" CENTER DRAIN AND TRAP (LOCATED 18"-30" BELOW BOX) . [INLET STRAINER, SCREEN OR SEDIMENT BASKET], TWO QUARTER-TURN ANGLE VALVES WITH 1/2" THREADED OUTLETS AND FLANGED WATER HAMMER ARRESTORS. PROVIDE FLEXIBLE WATER AND WASTE LINES FOR FINAL CONNECTION TO EQUIPMENT.	WATER-TITE (4700 HA SERIES), OATEY (38000 SERIES), SYMMONS (LM600A), GUY GRAY
UR-1	URINAL - WALL MOUNTED, WHITE VITREOUS CHINA, FLUSH VALVE TYPE, SIPHON JET, LOW CONSUMPTION, EXTENDED FRONT, 3/4" TOP SPUD, 2" OUTLET. FLUSH VALVE - EXPOSED, SENSOR OPERATION, HARD WIRED, 0.5 GALLON PER FLUSH, 11-1/2" ROUGH-IN, CHROME-PLATED, 3/4" I.P.S. SCREWDRIVER STOP-CHECK VALVE WITH VANDAL RESISTANT CAP, HIGH BACK PRESSURE VACUUM BREAKER, NON-HOLD-OPEN HANDLE, ADJUSTABLE TAILPIECE, SPUD COUPLING AND FLANGE, WALL FLANGE WITH SET SCREW, [MANUAL OVER-RIDE,] RANGE ADJUSTMENT SCREW, CHROME-PLATED COVER PLATE WITH TAMPER-PROOF SCREWS, TRANSFORMER CAPABLE OF OPERATING UP TO 10 UNITS, LOW VOLTAGE WIRING FROM TRANSFORMER TO EACH FLUSH VALVE, CHLORAMINE RESISTANT MATERIALS, 3-YEAR WARRANTY. ELECTRICAL REQUIREMENTS - 120VAC INPUT ELECTRONIC SENSOR FLUSH VALVES SHALL HAVE PROGRAMMABLE AUTOMATIC FLUSH SET FOR 1 FLUSH PER DAY. ACCESSORIES - SUPPORT CARRIER WITH TOP AND BOTTOM BEARING PLATES. MOUNT WITH CARRIER BOLTED SECURELY TO FLOOR. TOP OF BOWL RIM SHALL BE AT 22" ABOVE FLOOR. VERIFY EQUIPMENT REQUIREMENTS AND ROUGH-IN LOCATIONS.	URINAL - AMERICAN STANDARD (6550.001), KOHLER (K-5016-ET), GERBER (27-750), ZURN (Z5730) FLUSH VALVE - ZURN (ZEMS6003AV), SLOAN (ROYAL 186 ES-S), AMERICAN STANDARD (6062.051), HYDROTEK (H8-B1-05), MOEN (8315AC05), AMTC (AEF-801-HWCU-05)
US-1	UTILITY SINK - CAST IRON CONSTRUCTION, WHITE ACID RESISTANT ENAMEL FINISH, 24"x20", BLANK BACK, STAINLESS STEEL RIM GUARD, WALL HANGER, 3" TRAP WITH CLEANOUT PLUG AND STRAINER. SINK TRIM - TWO HANDLE EXPOSED MIXING FAUCET, BRASS CONSTRUCTION, CHROME-PLATED FINISH, SINGLE WING HANDLES, 1/4 TURN CERAMIC DISC CARTRIDGE, 3/4" HOSE THREAD SPOUT, INTEGRAL VACUUM BREAKER, WALL BRACE, PAIL HOOK, CHECK STOPS OR INLINE CHECK VALVES TO PREVENT THERMAL CROSSOVER. FACUET SHALL COMPLY WITH FEDERAL ACT S.3874.	SINK - AMERICAN STANDARD (7695.000), CECO (868), KOHLER (K-6716-0) TRIM - DELTA (28C2), AMERICAN STANDARD (8344.012), MOEN (8124), SPEAKMAN (SC-5812), ZURN (Z841M1-XL)

PLUMBING MATERIAL LIST

TAG NAME	DESCRIPTION	MANUFACTURER AND MODEL
BT-1	BATHTUB - ACCESSIBLE TUB, ENAMELED CAST IRON BATHTUB, INSTALL TO ADA REQUIREMENTS. BATH DRAIN - ROTARY TURN OPERATION, DURABLE METAL CONSTRUCTION. BATH/SHOWER VALVE - SINGLE HANDLE THERMOSTATIC/PRESSURE BALANCED MIXING FAUCET, BRASS OR BRONZE CONSTRUCTION, WASHERLESS DESIGN, OFF-COLD-HOT TEMPERATURE RANGE INDICATOR DIAL, POLISHED CHROME CAST METAL LEVER HANDLE, INTEGRAL CHECK-STOPS, ADJUSTABLE SAFETY LIMIT STOP, ASSE 1016-T/P LISTED. ACCESSORIES - CHROME-PLATED BRASS SHOWERHEAD WITH SWIVEL BALL JOINT, ADJUSTABLE SPRAY, CHROME-PLATED BRASS ARM AND FLANGE, CHROME-PLATED BRASS DIVERTER SPOUT. INSTALL BOTTOM OF SHOWERHEAD AT 72" ABOVE FINISHED FLOOR. MAXIMUM FLOW TO BE 2.5 GPM IN COMPLIANCE WITH ENERGY POLICY ACT OF 2005 AND ASME/ANSI STANDARD A112.18.1M. SET SAFETY LIMIT STOP TO 110 DEGREE F DISCHARGE.	BATH TUB - KOHLER (K-714), (K-715) BATH DRAIN - KOHLER (K-7160), AMERICAN STANDARD (1583.470) BATH/SHOWER VALVE -POWERS (E710), CHICAGO FAUCETS (2500-600CP), LAWLER (7800)
CP-1	CIRCULATING PUMP - VARIABLE SPEED, LEAD FREE BRONZE OR STAINLESS STEEL CONSTRUCTION, PERMANENTLY LUBRICATED SEALED BEARINGS, MECHANICAL SEAL, OIL LUBRICATED, ECM MOTOR WITH INTEGRATED VARIABLE SPEED CONTROL AND THERMAL OVERLOAD PROTECTION, ONE SET OF DRY CONTACTS FOR STATUS OUTPUT TO BMS, FLANGED CONNECTIONS, RATED FOR 125 PSIG AT 225°F, MANUFACTURER PROVIDED PUMP BODY INSULATION KIT, UL LISTED. 37 GPM @ 29 FEET OF HEAD. MOTOR SHALL BE 1 HP. ELECTRICAL REQUIREMENTS - 208/230V, 1 PHASE (HARD-WIRE)	PUMP - B&G (ECOCIRC XL SERIES), GRUNDFOS (MAGNA SERIES), WILO (STRATOS Z SERIES)
CP-2	CIRCULATING PUMP - LEAD FREE BRONZE CONSTRUCTION, PERMANENTLY LUBRICATED SEALED BEARINGS, MECHANICAL SEAL, OIL LUBRICATED, OPEN DRIP-PROOF NON OVERLOADING MOTOR WITH THERMAL OVER

VIEW KEY

NAME 10'-0" — LEVEL NAME HEIGHT ABOVE PROJECT 0'-0"

1 — INDICATES NOTE USED TO DESCRIBE ADDITIONAL INFORMATION ABOUT WORK REQUIRED, SPECIFIC TO THE SHEET AND/OR DETAIL

LINE TYPE AND TAG KEY:

NEW WORK BY THIS CONTRACTOR (WIDE LINE)
- NEW
- EXISTING TO BE REMOVED (SHORT DASHED PATTERN)
- NEW UNDERFLOOR OR UNDERGROUND (LONG DASHED PATTERN)

EXISTING TO REMAIN OR WORK BY OTHERS (NARROW LINE)
- EXISTING
- EXISTING TO BE REMOVED BY OTHERS (SHORT DASHED PATTERN)
- EXISTING UNDERFLOOR OR UNDERGROUND (LONG DASHED PATTERN)

HALFTONING DOES NOT MODIFY SCOPE.

'TAG'-E — TAGS WITH DASH 'E' INDICATES THE REFERENCED OBJECT IS EXISTING

TAG — UNDERLINED TAG INDICATES OBJECT IS IN-SCOPE. IF NEW, ADDITIONAL INFORMATION IS AVAILABLE IN A SCHEDULE, MATERIAL LIST, OR SYMBOL LIST

INDICATES AN EXISTING SYSTEM'S POINT OF CONNECTION/REMOVAL

PROJECT ALTITUDE:	5,502.00 FT. ABOVE SEA LEVEL

MECHANICAL DESIGN CONDITIONS:

DESIGN CONDITIONS: BASED ON WEATHER DATA FOR: SHIPROCK, NEW MEXICO

SUMMER:	96.1°F DRY BULB, 59.4°F WET BULB
WINTER:	1°F DRY BULB

TYPICAL ROOM SETPOINTS:

SUMMER DESIGN:	75°F DRY BULB, NO HUMIDITY REQUIREMENT
WINTER DESIGN:	70°F DRY BULB, NO HUMIDITY REQUIREMENT
SUMMER SETBACK:	85°F DRY BULB, NO HUMIDITY REQUIREMENT
WINTER SETBACK:	65°F DRY BULB, NO HUMIDITY REQUIREMENT

APPLICABLE CODES

CONTRACTOR SHALL COMPLY WITH APPLICABLE CODES AND LOCAL AMENDMENTS INCLUDING, BUT NOT LIMITED TO, THE FOLLOWING:

BUILDING CODE:	2015 NEW MEXICO COMMERCIAL BUILDING CODE (NMCBC)
MECHANICAL CODE:	2021 NEW MEXICO MECHANICAL CODE
PLUMBING CODE:	2021 NEW MEXICO PLUMBING CODE
FIRE CODE:	2018 INTERNATIONAL FIRE CODE (IFC)
ENERGY CODE:	2018 INTERNATIONAL ENERGY CONSERVATION CODE (IECC)
ELECTRIC CODE:	2017 NEW MEXICO ELECTRIC CODE
FUEL GAS CODE:	2018 INTERNATIONAL FUEL GAS CODE (IFGC)

VENTILATION SYMBOL LIST

NOT ALL SYMBOLS MAY APPLY.

SYMBOL:	DESCRIPTION:
	DIRECTION OF AIR FLOW
	FLEXIBLE DUCT
	MANUAL VOLUME DAMPER
RVD	REMOTE VOLUME DAMPER
R	RISE IN DIRECTION OF AIR FLOW
D	DROP IN DIRECTION OF AIR FLOW
	DUCT CAP
	DUCT DOWN
	DUCT UP
	SUPPLY/OUTSIDE AIR DUCT SECTION
	RETURN AIR DUCT SECTION
	EXHAUST/RELIEF AIR DUCT SECTION
	4-WAY DIFFUSER WITH BLANKOFF IN ONE DIRECTION
SD-1 6/115	AIR TERMINAL PROPERTIES SYMBOL NECK SIZE/CFM
###	TERMINAL AIR BOX (REFER TO SCHEDULE)
###	TERMINAL AIR BOX w/REHEAT COIL (REFER TO SCHEDULE)
	FAN POWERED TERMINAL AIR BOX w/REHEAT COIL (REFER TO SCHEDULE)
H	HUMIDIFIER
	OPPOSED BLADE DAMPER (REFER TO SCHEDULE)
	PARALLEL BLADE DAMPER (REFER TO SCHEDULE)
	DIFFERENTIAL PRESSURE SENSOR
CO	CARBON MONOXIDE SENSOR
CO2	CARBON DIOXIDE SENSOR
H	HUMIDISTAT SENSOR
H	HUMIDISTAT/SENSOR (DUCT MOUNTED)
O	OCCUPANCY SENSOR
P	PRESSURE SENSOR/MONITOR
P	PRESSURE SENSOR (DUCT MOUNTED)
T	THERMOSTAT/SENSOR
T	TEMPERATURE SENSOR (DUCT MOUNTED)
T	THERMOSTAT/SENSOR WITH HEAVY DUTY ENCLOSURE
DPP	CONDENSATE DRAIN PIPING

VENTILATION ABBREVIATION KEY

ABBR:	DESCRIPTION:
AD	ACCESS DOOR
AFF	ABOVE FINISHED FLOOR
CFSD	CONTROL/FIRE/SMOKE DAMPER
DPG (0-2")	DIFFERENTIAL PRESSURE GAUGE (RANGE)
DPS	DIFFERENTIAL PRESSURE SWITCH
EA	EXHAUST/RELIEF AIR
ECFSD	EXISTING CONTROL FIRE SMOKE DAMPER
EFD	EXISTING FIRE DAMPER
EFSD	EXISTING FIRE SMOKE DAMPER
ESD	EXISTING SMOKE DAMPER
FD	FIRE DAMPER
FOB	FLAT ON BOTTOM
FOT	FLAT ON TOP
FSD	FIRE/SMOKE DAMPER
MA	MIXED AIR
N.C.	NORMALLY CLOSED
NIC	NOT IN CONTRACT
N.O.	NORMALLY OPEN
OA	OUTSIDE AIR
RA	RETURN AIR
SA	SUPPLY AIR
SCCR	SHORT CIRCUIT CURRENT RATING
SD	SMOKE DAMPER
TAB	TERMINAL AIR BOX
TD	TRANSFER DUCT
TYP	TYPICAL
UC-1	DOOR UNDERCUT BY OTHERS (1" TYPICAL)
UON	UNLESS OTHERWISE NOTED

CONTRACTOR ABBREVIATION KEY

ABBR:	DESCRIPTION:
A.C.	ASBESTOS ABATEMENT CONTRACTOR
A.V.C.	AUDIO/VISUAL CONTRACTOR
C.C.	CIVIL CONTRACTOR
C.M.	CONSTRUCTION MANAGER
E.C.	ELECTRICAL CONTRACTOR
F.P.C.	FIRE PROTECTION CONTRACTOR
F.S.C.	FOOD SERVICE CONTRACTOR
G.C.	GENERAL CONTRACTOR
H.C.	HEATING CONTRACTOR
M.C.	MECHANICAL CONTRACTOR
N.C.C.	NURSE CALL CONTRACTOR
P.C.	PLUMBING CONTRACTOR
S.C.	SECURITY CONTRACTOR
T.C.	TECHNOLOGY CONTRACTOR
T.C.C.	TEMPERATURE CONTROLS CONTRACTOR
V.C.	VENTILATION CONTRACTOR

MECHANICAL GENERAL NOTES:

THESE NOTES APPLY TO VENTILATION, PIPING AND TEMPERATURE CONTROL.

1. DRAWINGS SHOWING LOCATIONS OF EQUIPMENT, DUCTWORK, PIPING, ETC. ARE DIAGRAMMATIC AND MAY NOT ALWAYS REFLECT EXACT INSTALLATION CONDITIONS. DRAWINGS SHOW THE GENERAL ARRANGEMENT OF DUCTWORK, PIPING, EQUIPMENT, ETC., AND MAY NOT INCLUDE ALL OFFSETS AND FITTINGS REQUIRED FOR COMPLETE INSTALLATION. THE DRAWINGS SHALL BE FOLLOWED AS CLOSELY AS ACTUAL BUILDING CONSTRUCTION AND THE WORK OF OTHERS WILL PERMIT.
2. DO NOT SCALE DRAWINGS. VERIFY ALL DIMENSIONS AND CLEARANCES FROM ARCHITECTURAL, STRUCTURAL, SUBMITTALS, AND OTHER APPROPRIATE DRAWINGS OR PHYSICALLY AT SITE. REVIEW ALL DRAWINGS, INCLUDING THOSE OF OTHER TRADES.
3. COORDINATE ALL WORK WITH ALL OTHER TRADES PRIOR TO INSTALLATION TO PROVIDE CLEARANCES REQUIRED FOR OPERATION, MAINTENANCE, CODE COMPLIANCE, AND TO VERIFY NON-INTERFERENCE WITH OTHER WORK. DO NOT FABRICATE PRIOR TO VERIFICATION OF NECESSARY CLEARANCES FOR ALL TRADES. BRING ANY INTERFERENCES OR CONFLICTS TO THE ATTENTION OF THE ARCHITECT/ENGINEER BEFORE PROCEEDING WITH FABRICATION OR EQUIPMENT ORDERS.
4. REVIEW SPACE REQUIREMENTS OF EQUIPMENT SPECIFIED OR SUBSTITUTED AND MAKE REASONABLE ACCOMMODATIONS IN LAYOUT AND POSITIONING TO PROVIDE PROPER ACCESS.
5. ANY CHANGES REQUIRED TO ELIMINATE CONFLICTS OR THAT RESULT FROM A FAILURE TO COORDINATE SHALL BE MADE BY THE CONTRACTOR WITHOUT ADDITIONAL COST OR EXPENSE TO OTHERS.
6. EACH CONTRACTOR IS RESPONSIBLE FOR ALL COSTS ASSOCIATED WITH ELECTRICAL CHANGES REQUIRED FOR EQUIPMENT PROPOSED THAT DIFFERS FROM THE BASIS OF DESIGN.
7. REFER TO ARCHITECTURAL REFLECTED CEILING PLAN, ELECTRICAL, TECHNOLOGY AUDIO/VISUAL, AND OTHER MECHANICAL PLANS FOR EXACT LOCATIONS OF ALL CEILING MOUNTED DEVICES, OTHER THAN SPRINKLERS.
8. EACH CONTRACTOR IS RESPONSIBLE FOR DAMAGE CAUSED BY THEIR ACTIONS TO WALLS, FLOORS, CEILINGS, AND ROOFS. THE CONTRACTOR WHOSE WORK CAUSES DAMAGE IS RESPONSIBLE FOR PATCHING TO MATCH ORIGINAL CONSTRUCTION, FIRE RATING, AND FINISH.
9. IN AREAS WITH DRYWALL CEILINGS COORDINATE LOCATIONS OF ACCESS PANELS WITH THE GC FOR ACCESS TO VALVES, DUCTWORK ACCESSORIES, DAMPERS, ETC. COORDINATE PANEL TYPE AND COLOR WITH ARCHITECT. NOTIFY THE GC OF THE REQUIRED ACCESS PANELS PRIOR TO BIDDING.
10. SEAL ALL FLOOR, WALL, AND ROOF PENETRATIONS AIRTIGHT WHERE CONDUITS, PIPING, AND DUCTS PENETRATE. PENETRATIONS THROUGH EXTERIOR WALLS AND ROOF SHALL BE SEALED AIRTIGHT WITH WATERPROOFING MATERIALS RECOMMENDED BY MANUFACTURER FOR OUTDOOR USE.
11. CAULK ALL PIPE AND DUCT PENETRATIONS OF FULL HEIGHT NON-FIRE RATED WALL, PARTITION, FLOOR, AND ROOF ASSEMBLIES. THIS IS ESSENTIAL TO PREVENT NOISE TRANSMISSION FROM ONE ROOM TO ANOTHER AND TO PROVIDE THE DESIRED NC LEVELS WITHIN ROOMS.
12. WHERE PIPES AND DUCTS ARE SHOWN TO PENETRATE FLOORS, PROVIDE SLEEVED OPENINGS WITH THE TOP EDGE RAISED ABOVE FLOOR SURFACE IN ACCORDANCE WITH ALL RELEVANT SPEC SECTIONS. SEAL SLEEVE PERIMETER TO BE WATERTIGHT.
13. EQUIPMENT SIZES AND SERVICE CLEARANCE REQUIREMENTS VARY AMONG DIFFERENT MANUFACTURERS. CONSULT APPROVED SHOP DRAWINGS FOR EQUIPMENT SIZES AND REQUIRED SERVICE CLEARANCES. COORDINATE WITH LAYOUT OF EQUIPMENT PADS, PIPING, DUCTWORK, ETC.
14. DO NOT BLOCK TUBE PULL OR EQUIPMENT SERVICE CLEARANCES.
15. MAINTAIN A MINIMUM WORKING CLEARANCE OF 3'-6" IN FRONT OF ALL ELECTRICAL EQUIPMENT REQUIRING MAINTENANCE, INSPECTION, AND TESTING INCLUDING BUT NOT LIMITED TO PANELS, DISTRIBUTION PANELS, SWITCHBOARDS, MOTOR CONTROL CENTERS, TRANSFORMERS, EQUIPMENT DISCONNECTS AND STARTERS.
16. MAINTAIN THE DEDICATED ELECTRICAL EQUIPMENT SPACE DEFINED BY THE WIDTH / DEPTH OF ELECTRICAL EQUIPMENT MEASURED FROM THE FLOOR TO A HEIGHT 6'-0" ABOVE THE EQUIPMENT OR THE STRUCTURAL CEILING, WHICHEVER IS LOWER. SYSTEMS FOREIGN TO THE ELECTRICAL DISTRIBUTION SYSTEM ARE NOT ALLOWED IN THE DEDICATED ELECTRICAL SPACE INCLUDING: DUCTWORK, PIPING, ETC.
17. PROVIDE CONCRETE EQUIPMENT PAD FOR ALL FLOOR MOUNTED EQUIPMENT. PAD SHALL EXTEND MINIMUM 6" BEYOND ALL SIDES OF EQUIPMENT.
18. DO NOT SUPPORT EQUIPMENT, PIPING, OR DUCTWORK FROM METAL DECKING OR OTHER NON-STRUCTURAL BUILDING ELEMENTS. ANCHORS EMBEDDED IN CONCRETE SHALL BE CRACKED CONCRETE APPROVED IN ACCORDANCE WITH SPECIFICATIONS.

VENTILATION GENERAL NOTES:

1. UNLESS NOTED OTHERWISE, THE SIZE OF EACH BRANCH DUCT TO AN AIR TERMINAL SHALL MATCH THE INLET SIZE.
2. ALIGN TEMPERATURE SENSORS WITH LIGHT SWITCHES AND WHEN IN CLOSE PROXIMITY TO EACH OTHER.
3. PROVIDE ACCESS DOORS AT ALL DUCT MOUNTED EQUIPMENT.

TAB POST-CONSTRUCTION NOTES:

1. AFTER CONSTRUCTION ACTIVITIES ARE COMPLETE, TESTING, ADJUSTING (TAB) AND BALANCING CONTRACTOR SHALL REBALANCE AIR HANDLING UNITS AND EXHAUST FANS AS REQUIRED TO ACHIEVE THE NEW AIRFLOW VALUES SHOWN ON THE CONSTRUCTION DRAWINGS.
2. AREAS SERVED BY THIS EQUIPMENT WHICH WERE NOT RENOVATED SHALL BE RE-BALANCED TO THE AIRFLOW RATES MEASURED BEFORE THE RENOVATION OCCURRED (REFER TO THE FINAL PRE- DEMOLITION REPORT).
3. IF DUCT TRAVERSE LOCATION AS MARKED ON THE DRAWINGS IS INACCESSIBLE FOR MEASUREMENT, THE TAB CONTRACTOR SHALL PERFORM THE TRAVERSE AT AN ALTERNATE LOCATION OR SHALL TAKE MULTIPLE DUCT TRAVERSES AND/OR GRILLE READINGS AS REQUIRED TO DETERMINE THE FLOW RATE. IN THE EVENT TRAVERSES ARE TAKEN AT AN ALTERNATE LOCATION(S), TAB CONTRACTOR SHALL INCLUDE A DRAWING THAT SHOWS THE LOCATIONS WHERE THE ACTUAL MEASUREMENTS WERE TAKEN.
4. A DUCT STATIC PRESSURE READING SHALL BE TAKEN AT EACH LOCATION WHERE A DUCT TRAVERSE READING IS TAKEN AND SHALL BE INCLUDED IN THE FINAL POST-CONSTRUCTION TAB REPORT.
5. TAB CONTRACTOR SHALL COMPILE AND SUBMIT COPIES OF THE FINAL POST-CONSTRUCTION TAB REPORT AS REQUIRED BY SECTION 23 05 93.
6. THE FINAL POST CONSTRUCTION REPORT SHALL INCLUDE ALL ITEMS REQUIRED IN THE SPECIFICATIONS.

VENTILATION SHEET INDEX

M000	VENTILATION COVERSHEET
M101	FIRST & SECOND FLOOR MECHANICAL PLAN - HOTEL
M102	THIRD & FOURTH FLOOR MECHANICAL PLAN - HOTEL
M103	MECHANICAL PLAN - RESTAURANT
M104	FIRST & SECOND FLOOR PIPING PLAN - HOTEL
M105	THIRD & FOURTH FLOOR PIPING PLAN - HOTEL
M106	MECHANICAL PIPING PLAN - RESTAURANT
M112	MECHANICAL ROOF PLAN - HOTEL
M114	MECHANICAL ROOF PLAN - RESTAURANT
M400	MECHANICAL UNIT PLANS - HOTEL
M500	MECHANICAL DETAILS
M501	MECHANICAL DETAILS
M502	MECHANICAL DETAILS
M503	MECHANICAL DETAILS
M504	MECHANICAL CAPTIVEAIRE DRAWINGS
M505	MECHANICAL CAPTIVEAIRE DRAWINGS
M506	MECHANICAL CAPTIVEAIRE DRAWINGS
M600	MECHANICAL SCHEDULES
M601	MECHANICAL SCHEDULES
M602	MECHANICAL SCHEDULES
M603	MECHANICAL SCHEDULES
GRAND TOTAL: 21	

IMEG
www.imegcorp.com
5900 E PIMA CENTER PARKWAY
SUITE 320
SCOTTSDALE, AZ 85258
P: 480.222.3771

IMEG CORP. RESERVES PROPRIETARY RIGHTS, INCLUDING COPYRIGHTS, TO THIS DRAWING AND THE DATA SHOWN THEREON. SAID DRAWING AND/OR DATA ARE THE EXCLUSIVE PROPERTY OF IMEG CORP. AND SHALL NOT BE USED OR REPRODUCED FOR ANY OTHER PROJECT WITHOUT THE EXPRESS WRITTEN APPROVAL AND PARTICIPATION OF IMEG CORP. ©2023 IMEG CORP.

0 1 2 3
REF. SCALE IN INCHES
PROJECT #23002327.00

STAMP

11.03.2023

DYRON MURPHY ARCHITECTS, P.C.
4505 Montbel Place NE, Albuquerque, New Mexico 87107

SHIPROCK PINNACLE HOTEL & RESTAURANT

SHIPROCK, NEW MEXICO

100% CONSTRUCTION DOCUMENTS

ISSUED FOR CONSTRUCTION

NOVEMBER 3, 2023

PROJECT NUMBER	DRAWN BY	PROJ MGR
2022.10	IMEG	IMEG

VENTILATION COVERSHEET

Sheet Title

Sheet Number of

M000

11/2/2023 3:33:03 PM Autodesk Docs://23002327.00 - Shiprock Pinnacle Hotel & Restaurant/M6P22_23002327.00_Shiprock Pinnacle Hotel_C.rvt
DYRON MURPHY ARCHITECTS, P.C.

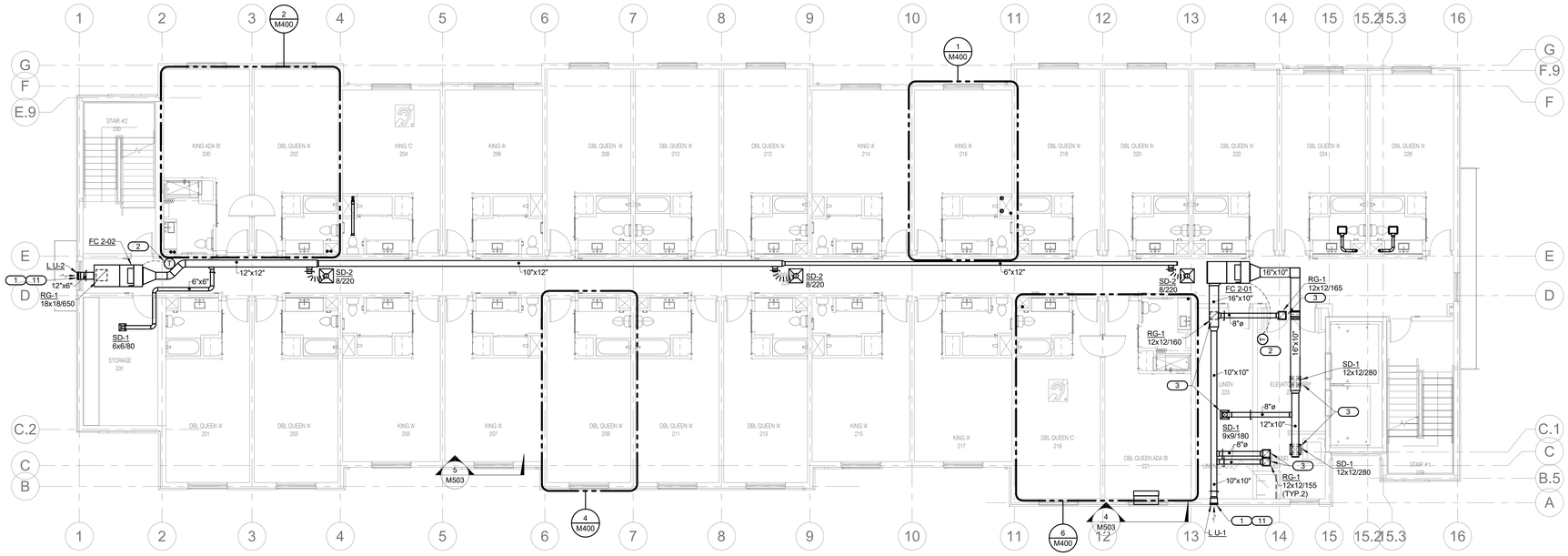

2 SECOND FLOOR MECHANICAL PLAN

1/8" = 1'-0"

NORTH

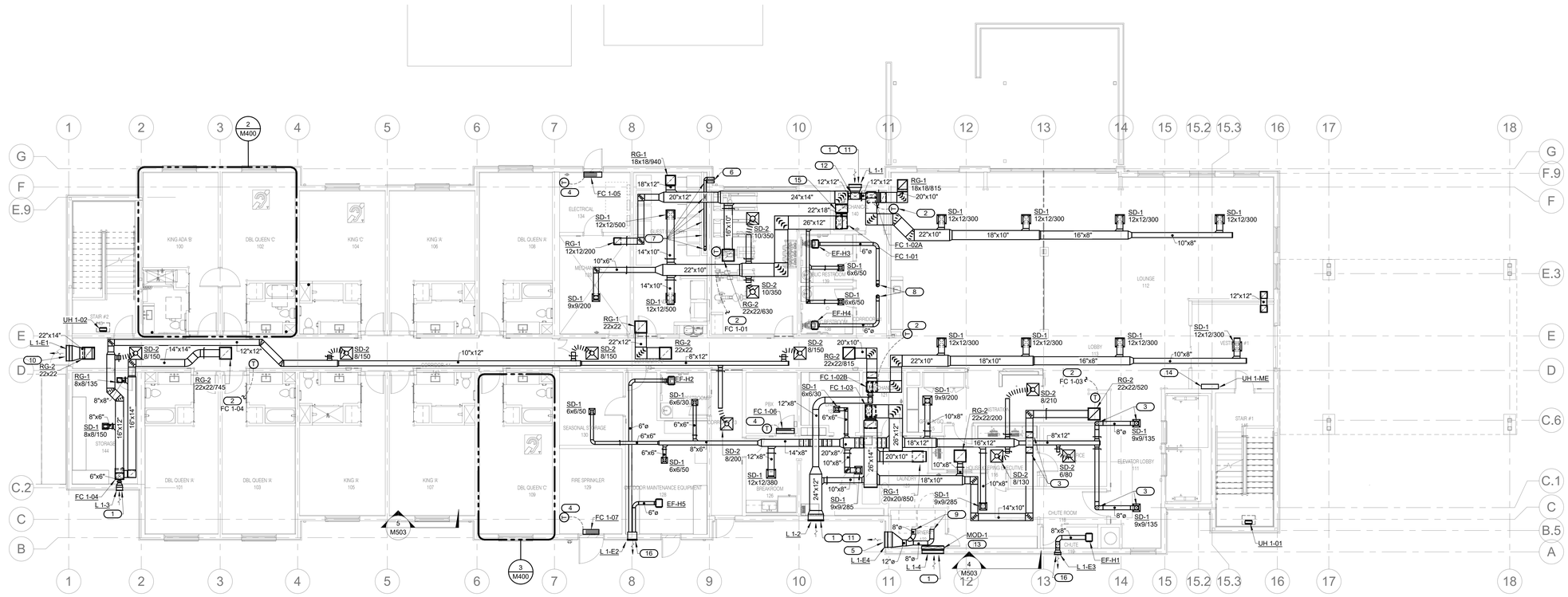

1 FIRST FLOOR MECHANICAL PLAN

1/8" = 1'-0"

NORTH

KEYNOTES: (#)

1. INSTALL LOUVERS AS HIGH AS POSSIBLE WITH HEATED SNOW ELIMINATOR MESH. REFER TO MECHANICAL SCHEDULE. PROVIDE BACKDRAFT DAMPER IN RELIEF DUCT.
2. PROVIDE ECOBEE EMS-SI WIFI ENABLED, 7-DAY PROGRAMMABLE THERMOSTAT AND WIRING TO UNIT INDICATED.
3. PROVIDE RADIATION DAMPERS IN DUCT PENETRATION THROUGH RATED LID ABOVE CEILING. RADIATION DAMPER SHALL MEET THE UL RATING OF THE RATED LID. COORDINATE WITH ARCHITECTURAL.
4. PROVIDE MANUFACTURERS WALL MOUNTED 7-DAY PROGRAMMABLE THERMOSTAT AND WIRING TO UNIT INDICATED.
5. MOUNT WALL LOUVER LOW IN WALL.
6. PROVIDE FOUR (6) 4" DIA. ALTERNATING STACKED DRYER WALL CAPS WITH BACKDRAFT DAMPER MOUNTED AS LOW IN WALL AS POSSIBLE.
7. 4" DIA. DRYER EXHAUST DUCT IN WALL. TURN OUT DUCT AND PROVIDE 4" STUB FOR DRYER EXHAUST CONNECTION.
8. 6" DIA. EXHAUST DUCT UP IN CHASE TO ROOF CAP.
9. PROVIDE DUCT CONNECTION TO CLOTHES DRYER WITH LINT COLLECTOR INTEGRAL WITH UNIT.
10. INSTALL RELIEF AIR WALL LOUVER AS HIGH AS POSSIBLE. PROVIDE BACKDRAFT DAMPER IN RELIEF DUCT.
11. OUTSIDE AIR WALL LOUVER. PROVIDE BACKDRAFT DAMPER IN DUCT.
12. 18X12 OUTSIDE AIR DUCT DOWN.
13. MOTORIZED DAMPER MOUNTED IN OUTSIDE AIR DUCT. DAMPER SHALL BE INTERLOCKED WITH THE CLOTHES DRYERS TO OPEN UPON DRYERS BEING ENERGIZED. CLOTHES DRYERS SHALL BE ON A DELAY AND DAMPER SHALL OPEN PRIOR TO DRYERS OPERATION.
14. CABINET UNIT HEAT MOUNTED TO WALL. INSTALL AS PER MANUFACTURERS RECOMMENDATIONS.
15. TRANSITION TO 22X18 IN DUCT DROP PRIOR TO OUTSIDE AIR CONNECTION.
16. MOUNT LOUVER AS HIGH AS POSSIBLE.

SHEET NOTES:

1. REMOTE VOLUME DAMPERS ARE REQUIRED FOR ALL DAMPERS INSTALLED ABOVE INACCESSIBLE CEILINGS.
2. VERIFY LOCATION OF ALL THERMOSTATS WITH ARCHITECT PRIOR TO INSTALLATION. MOUNT ALL THERMOSTATS @48" A.F.F. IN ACCORDANCE WITH ADA STANDARDS. PROVIDE LOCKING COVERS WHERE REQUESTED (COORDINATE WITH OWNER).
3. VERIFY AND COORDINATE FRAME AND BORDER TYPE REQUIREMENTS FOR AIR DEVICES WITH ARCHITECTURAL CEILING PLANS PRIOR TO ORDERING.
4. DUCT SIZES SHOWN ARE THE CLEAR INSIDE DIMENSIONS.
5. THE MECHANICAL CONTRACTOR SHALL VERIFY THE LOCATION OF ALL ROOF MOUNTED EQUIPMENT AND ROOF PENETRATIONS WITH ARCHITECT AND STRUCTURAL ENGINEER PRIOR TO COMMENCING WORK.
6. THE MECHANICAL CONTRACTOR SHALL COORDINATE LOCATION AND ROUTING OF HVAC EQUIPMENT AND DUCTWORK WITH OTHER TRADES PRIOR TO COMMENCING WORK.
7. ALL EXHAUST OUTLETS SHALL BE LOCATED MIN. OF 10'-0" FROM ANY OUTSIDE AIR INTAKES.
8. THE CUTTING, NOTCHING AND BORING OF HOLES IN FLOOR JOIST AND WALL STUDS SHALL BE IN ACCORDANCE WITH THE LATEST APPROVED EDITION OF THE INTERNATIONAL BUILDING CODE.
9. CONTRACTOR SHALL BE RESPONSIBLE FOR ALL CUTTING AND PATCHING AS REQUIRED TO ACCOMMODATE HIS WORK.
10. REFER TO THE MECHANICAL DIAGRAMS THAT APPLY TO THE WORK ON THIS DRAWING. THESE DIAGRAMS PROVIDE GUIDANCE AS TO INSTALLATION INTENT AND DO NOT NECESSARILY SHOW ALL COMPONENTS REQUIRED.
11. APPLIANCES SERVING DIFFERENT AREAS OF A BUILDING OTHER THAN WHERE THEY ARE INSTALLED SHALL BE PERMANENTLY MARKED IN AN APPROVED MANNER THAT UNIQUELY IDENTIFIES THE APPLIANCE AND THE AREA IT SERVES.
12. PROVIDE 1" ACOUSTICAL DUCT LINER FOR ALL TRANSFER AIR DUCT.
13. ALL RECTANGULAR DUCT ELBOWS SHALL HAVE TURNING VANES.

IMEG
5000 E PIMA CENTER PARKWAY
SUITE 320
SCOTTSDALE, AZ 85258
P: 480.222.3771
www.imegcorp.com

IMEG CORP. RESERVES PROPRIETARY RIGHTS, INCLUDING COPYRIGHTS, TO THIS DRAWING AND THE DATA SHOWN THEREON. SAID DRAWING AND/OR DATA ARE THE EXCLUSIVE PROPERTY OF IMEG CORP. AND SHALL NOT BE USED OR REPRODUCED FOR ANY OTHER PROJECT WITHOUT THE EXPRESS WRITTEN APPROVAL AND PARTICIPATION OF IMEG CORP. ©2023 IMEG CORP.

0 1 2 3
REF. SCALE IN INCHES
PROJECT #23002327.00

STAMP

BENJAMIN W. YEUNG
NEW MEXICO
LICENSED PROFESSIONAL ENGINEER
11.03.2023

DYRON MURPHY ARCHITECTS, P.C.
4505 Montbel Place NE, Albuquerque, New Mexico 87107

SHIPROCK PINNACLE HOTEL & RESTAURANT

SHIPROCK, NEW MEXICO

100% CONSTRUCTION DOCUMENTS

ISSUED FOR CONSTRUCTION

NOVEMBER 3, 2023

PROJECT NUMBER	DRAWN BY	PROJ MGR
2022.10	IMEG	IMEG

Sheet Title

FIRST & SECOND FLOOR MECHANICAL PLAN - HOTEL

Sheet Number

of

M101

11/2/2023 3:33:10 PM Autodesk Docs://23002327.00 - Shiprock Pinnacle Hotel & Restaurant/MEP/2_23002327.00_Shiprock Pinnacle Hotel_C.rvt
DYRON MURPHY ARCHITECTS, P.C.

2 FOURTH FLOOR MECHANICAL PLAN

1/8" = 1'-0"

1 THIRD FLOOR MECHANICAL PLAN

1/8" = 1'-0"

KEYNOTES: #

1. INSTALL LOUVERS AS HIGH AS POSSIBLE WITH HEATED SNOW ELIMINATOR MESH. REFER TO MECHANICAL SCHEDULE.
2. PROVIDE ECOBEE EMS-SI WIFI ENABLED, 7-DAY PROGRAMMABLE THERMOSTAT AND WIRING TO UNIT INDICATED.
3. PROVIDE RADIATION DAMPERS IN DUCT PENETRATION THROUGH RATED LID ABOVE CEILING.
4. REMOTE TEMPERATURE SENSOR MOUNTED IN RETURN DUCT.
5. OPEN ENDED SUPPLY/RETURN DUCT. PROVIDE 1/2"X1/2" WELDED WIRE SCREEN COVERING OPENING.
6. PROVIDE WALL MOUNTED 7-DAY PROGRAMMABLE THERMOSTAT MOUNTED IN LINEN ROOM. THERMOSTAT SHALL BE CONNECTED TO REMOTE TEMPERATURE SENSOR MOUNTED IN RETURN AIR DUCT AND ELEVATOR FAN COIL UNIT.
7. OUTSIDE AIR WALL LOUVER. PROVIDE BACKDRAFT DAMPER IN DUCT.

SHEET NOTES:

1. REMOTE VOLUME DAMPERS ARE REQUIRED FOR ALL DAMPERS INSTALLED ABOVE INACCESSIBLE CEILINGS.
2. VERIFY LOCATION OF ALL THERMOSTATS WITH ARCHITECT PRIOR TO INSTALLATION. MOUNT ALL THERMOSTATS @48" A.F.F. IN ACCORDANCE WITH ADA STANDARDS. PROVIDE LOCKING COVERS WHERE REQUESTED (COORDINATE WITH OWNER).
3. VERIFY AND COORDINATE FRAME AND BORDER TYPE REQUIREMENTS FOR AIR DEVICES WITH ARCHITECTURAL CEILING PLANS PRIOR TO ORDERING.
4. DUCT SIZES SHOWN ARE THE CLEAR INSIDE DIMENSIONS.
5. THE MECHANICAL CONTRACTOR SHALL VERIFY THE LOCATION OF ALL ROOF MOUNTED EQUIPMENT AND ROOF PENETRATIONS WITH ARCHITECT AND STRUCTURAL ENGINEER PRIOR TO COMMENCING WORK.
6. THE MECHANICAL CONTRACTOR SHALL COORDINATE LOCATION AND ROUTING OF HVAC EQUIPMENT AND DUCTWORK WITH OTHER TRADES PRIOR TO COMMENCING WORK.
7. ALL EXHAUST OUTLETS SHALL BE LOCATED MIN. OF 10'-0" FROM ANY OUTSIDE AIR INTAKES.
8. THE CUTTING, NOTCHING AND BORING OF HOLES IN FLOOR JOIST AND WALL STUDS SHALL BE IN ACCORDANCE WITH THE LATEST APPROVED EDITION OF THE INTERNATIONAL BUILDING CODE.
9. CONTRACTOR SHALL BE RESPONSIBLE FOR ALL CUTTING AND PATCHING AS REQUIRED TO ACCOMMODATE HIS WORK.
10. REFER TO THE MECHANICAL DIAGRAMS THAT APPLY TO THE WORK ON THIS DRAWING. THESE DIAGRAMS PROVIDE GUIDANCE AS TO INSTALLATION INTENT AND DO NOT NECESSARILY SHOW ALL COMPONENTS REQUIRED.
11. APPLIANCES SERVING DIFFERENT AREAS OF A BUILDING OTHER THAN WHERE THEY ARE INSTALLED SHALL BE PERMANENTLY MARKED IN AN APPROVED MANNER THAT UNIQUELY IDENTIFIES THE APPLIANCE AND THE AREA IT SERVES.
12. PROVIDE 1" ACCOUSTICAL DUCT LINER FOR ALL TRANSFER AIR DUCT.
13. ALL RECTANGULAR DUCT ELBOWS SHALL HAVE TURNING VANES.

IMEG
9000 E PIMA CENTER PARKWAY
SUITE 320
SCOTTSDALE, AZ 85258
P: 480.222.3771
www.imegcorp.com

IMEG CORP. RESERVES PROPRIETARY RIGHTS, INCLUDING COPYRIGHTS, TO THIS DRAWING AND THE DATA SHOWN THEREON. SAID DRAWING AND/OR DATA ARE THE EXCLUSIVE PROPERTY OF IMEG CORP. AND SHALL NOT BE USED OR REPRODUCED FOR ANY OTHER PROJECT WITHOUT THE EXPRESS WRITTEN APPROVAL AND PARTICIPATION OF IMEG CORP. ©2023 IMEG CORP.

0 1 2 3
REF. SCALE IN INCHES
PROJECT #23002327.00

STAMP

BENJAMIN W. YEUNG
NEW MEXICO
LICENSED PROFESSIONAL ENGINEER

11.03.2023

DYRON MURPHY ARCHITECTS, P.C.
4505 Montbel Place NE, Albuquerque, New Mexico 87107

SHIPROCK PINNACLE HOTEL & RESTAURANT

SHIPROCK, NEW MEXICO

100% CONSTRUCTION DOCUMENTS

ISSUED FOR CONSTRUCTION

NOVEMBER 3, 2023

PROJECT NUMBER	DRAWN BY	PROJ MGR
2022.10	IMEG	IMEG

THIRD & FOURTH FLOOR MECHANICAL PLAN - HOTEL

Sheet Title

Sheet Number

of

M102

11/2/2023 3:33:14 PM Autodesk Docs://23002327.00 - Shiprock Pinnacle Hotel & Restaurant/MEP2_23002327.00_Shiprock Pinnacle Hotel_C.rvt
DYRON MURPHY ARCHITECTS, P.C.

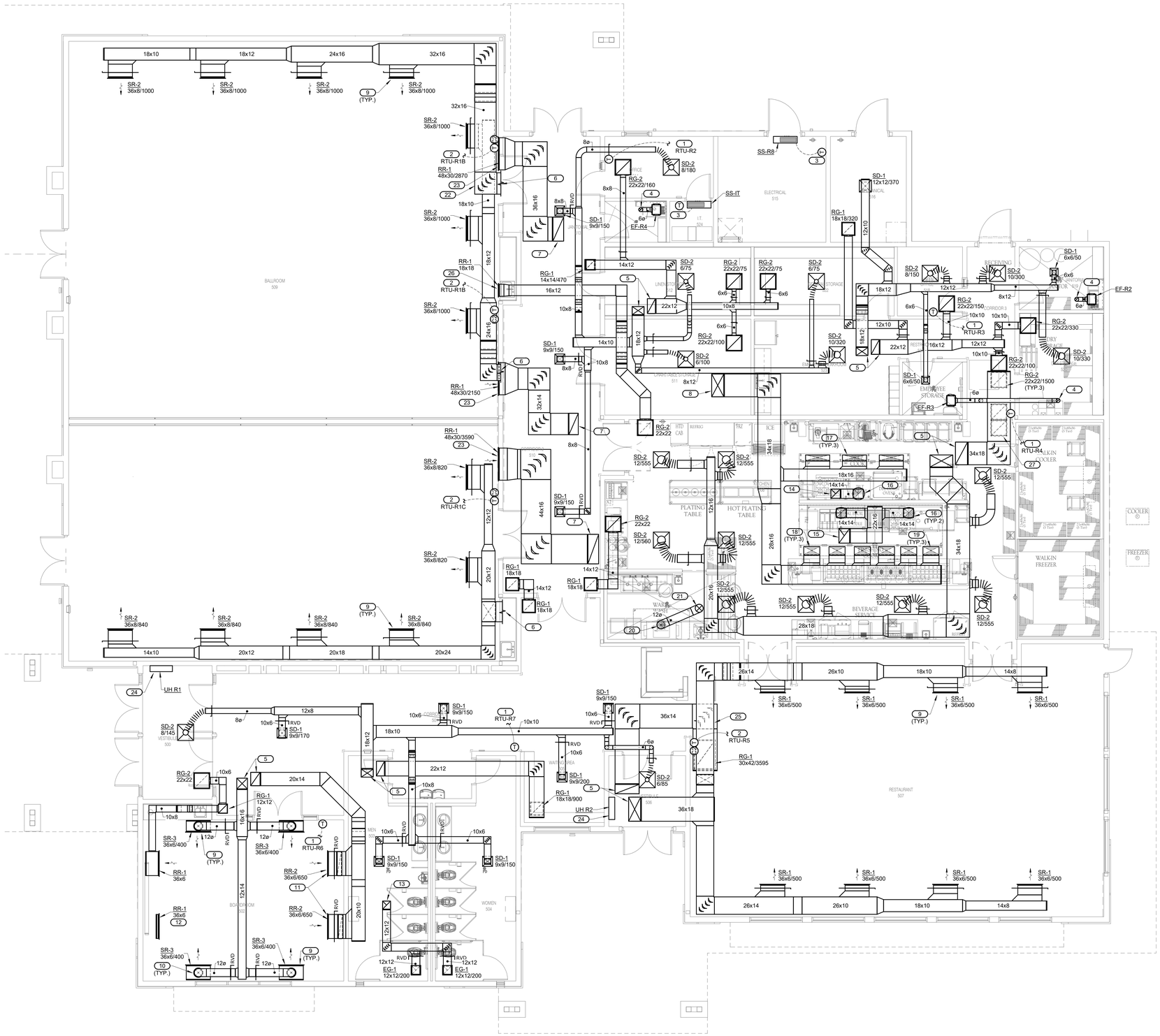

1 RESTAURANT MECHANICAL PLAN

3/16" = 1'-0"

NORTH

KEYNOTES: (#)

1. PROVIDE ECOBEE EMS-SI WIFI ENABLED, 7-DAY PROGRAMMABLE THERMOSTAT AND WIRING TO UNIT INDICATED.
2. PROVIDE ECOBEE EMS-SI WIFI ENABLED, 7-DAY PROGRAMMABLE THERMOSTAT, CO2 SENSOR FOR MONITORING DCV CONTROL AND WIRING TO UNIT INDICATED. SUPPLY FAN SHALL FUN CONTINUOUSLY.
3. PROVIDE MANUFACTURERS WALL MOUNTED 7-DAY PROGRAMMABLE THERMOSTAT AND WIRING TO UNIT INDICATED.
4. 6" DIA. EXHAUST DUCT UP THROUGH ROOF CAP.
5. SUPPLY AND RETURN DUCT UP THROUGH ROOF TO ROOFTOP UNIT.
6. SUPPLY DUCT THROUGH SIDEWALL HIGH ABOVE LOWER ROOF LEVEL TO ROOFTOP UNIT. FIELD COORDINATE EXACT HEIGHT. REFER TO ROOF PLAN SHEET M113 FOR CONTINUATION.
7. RETURN DUCT UP THROUGH ROOF TO ROOFTOP UNIT.
8. SUPPLY DUCT THROUGH ROOF TO MAKE-UP AIR UNIT.
9. SUPPLY DIFFUSER IN SIDEWALL OF SOFFIT. FIELD COORDINATE EXACT HEIGHT.
10. 12" DIA. SUPPLY DUCT DOWN AND CONNECT TO SUPPLY PLENUM.
11. RETURN GRILLE IN SIDEWALL OF SOFFIT. FIELD COORDINATE EXACT HEIGHT.
12. RETURN GRILLE IN SIDEWALL OF SOFFIT NOT CONNECTED. FIELD COORDINATE EXACT HEIGHT. GRILLE IS PROVIDED FOR APPEARANCE.
13. EXHAUST DUCT UP THROUGH ROOF TO EXHAUST FAN.
14. 14X14 GREASE EXHAUST DUCT UP THROUGH ROOF TO EXHAUST FAN. PROVIDE UNIFRAX FIRE WRAP DUCT INSULATION, AND CLEANOUTS AS REQUIRED.
15. 22X16 GREASE EXHAUST DUCT UP THROUGH ROOF TO EXHAUST FAN. PROVIDE UNIFRAX FIRE WRAP DUCT INSULATION, AND CLEANOUTS AS REQUIRED.
16. 14X14 EXHAUST DUCT DOWN TO HOOD CONNECTION.
17. 36X8 SUPPLY DUCT DOWN TO HOOD CONNECTION WITH VOLUME DAMPER INTEGRAL WITH HOOD. BALANCE TO 680 CFM.
18. 24X12 SUPPLY DUCT DOWN TO HOOD CONNECTION WITH VOLUME DAMPER INTEGRAL WITH HOOD. BALANCE TO 600 CFM.
19. 24X12 SUPPLY DUCT DOWN TO HOOD CONNECTION WITH VOLUME DAMPER INTEGRAL WITH HOOD. BALANCE TO 596 CFM.
20. 12" DIA. EXHAUST DUCT DOWN TO DISHWASHER HOOD CONNECTION.
21. 12" DIA. EXHAUST DUCT UP THROUGH ROOF TO EXHAUST FAN.
22. 32X16 SUPPLY DUCT ABOVE 18X10 SUPPLY DUCT.
23. RETURN GRILLE MOUNTED IN SIDEWALL AS HIGH AS POSSIBLE BELOW SOFFIT.
24. CABINET UNIT HEATER MOUNTED TO WALL. INSTALL AS PER MANUFACTURERS RECOMMENDATIONS.
25. SUPPLY DUCT ROUTED ABOVE RETURN DUCT.
26. TRANSFER GRILLE MOUNTED IN SIDEWALL AS HIGH AS POSSIBLE BELOW SOFFIT.
27. PROVIDE OPPOSED BLADE DAMPER IN DUCT DROP (TYP.3).

SHEET NOTES:

1. REMOTE VOLUME DAMPERS ARE REQUIRED FOR ALL DAMPERS INSTALLED ABOVE INACCESSIBLE CEILINGS.
2. VERIFY LOCATION OF ALL THERMOSTATS WITH ARCHITECT PRIOR TO INSTALLATION. MOUNT ALL THERMOSTATS @48" A.F.F. IN ACCORDANCE WITH ADA STANDARDS. PROVIDE LOCKING COVERS WHERE REQUESTED (COORDINATE WITH OWNER).
3. VERIFY AND COORDINATE FRAME AND BORDER TYPE REQUIREMENTS FOR AIR DEVICES WITH ARCHITECTURAL CEILING PLANS PRIOR TO ORDERING.
4. DUCT SIZES SHOWN ARE THE CLEAR INSIDE DIMENSIONS.
5. THE MECHANICAL CONTRACTOR SHALL VERIFY THE LOCATION OF ALL ROOF MOUNTED EQUIPMENT AND ROOF PENETRATIONS WITH ARCHITECT AND STRUCTURAL ENGINEER PRIOR TO COMMENCING WORK.
6. THE MECHANICAL CONTRACTOR SHALL COORDINATE LOCATION AND ROUTING OF HVAC EQUIPMENT AND DUCTWORK WITH OTHER TRADES PRIOR TO COMMENCING WORK.
7. ALL EXHAUST OUTLETS SHALL BE LOCATED MIN. OF 10'-0" FROM ANY OUTSIDE AIR INTAKES.
8. THE CUTTING, NOTCHING AND BORING OF HOLES IN FLOOR JOIST AND WALL STUDS SHALL BE IN ACCORDANCE WITH THE LATEST APPROVED EDITION OF THE INTERNATIONAL BUILDING CODE.
9. CONTRACTOR SHALL BE RESPONSIBLE FOR ALL CUTTING AND PATCHING AS REQUIRED TO ACCOMMODATE HIS WORK.
10. REFER TO THE MECHANICAL DIAGRAMS THAT APPLY TO THE WORK ON THIS DRAWING. THESE DIAGRAMS PROVIDE GUIDANCE AS TO INSTALLATION INTENT AND DO NOT NECESSARILY SHOW ALL COMPONENTS REQUIRED.
11. APPLIANCES SERVING DIFFERENT AREAS OF A BUILDING OTHER THAN WHERE THEY ARE INSTALLED SHALL BE PERMANENTLY MARKED IN AN APPROVED MANNER THAT UNIQUELY IDENTIFIES THE APPLIANCE AND THE AREA IT SERVES.
12. PROVIDE 1" ACOUSTICAL DUCT LINER FOR ALL TRANSFER AIR DUCT.
13. ALL RECTANGULAR DUCT ELBOWS SHALL HAVE TURNING VANES.

IMEG
9000 E PIMA CENTER PARKWAY
SUITE 320
SCOTTSDALE, AZ 85258
P: 480.222.3771
www.imegcorp.com

IMEG CORP. RESERVES PROPRIETARY RIGHTS, INCLUDING COPYRIGHTS, TO THIS DRAWING AND THE DATA SHOWN THEREON. SAID DRAWING AND/OR DATA ARE THE EXCLUSIVE PROPERTY OF IMEG CORP. AND SHALL NOT BE USED OR REPRODUCED FOR ANY OTHER PROJECT WITHOUT THE EXPRESS WRITTEN APPROVAL AND PARTICIPATION OF IMEG CORP. ©2023 IMEG CORP.

0 1 2 3
REF. SCALE IN INCHES PROJECT #23002327.00

STAMP

BENJAMIN W. YEUNG
NEW MEXICO
14802
LICENSED PROFESSIONAL ENGINEER
11.03.2023

DYRON MURPHY ARCHITECTS, P.C.

4505 Montbel Place NE, Albuquerque, New Mexico 87107

SHIPROCK PINNACLE HOTEL & RESTAURANT

SHIPROCK, NEW MEXICO

100% CONSTRUCTION DOCUMENTS

ISSUED FOR CONSTRUCTION

NOVEMBER 3, 2023

PROJECT NUMBER	DRAWN BY	PROJ MGR
2022.10	IMEG	IMEG

MECHANICAL PLAN - RESTAURANT

Sheet Title

Sheet Number of

M103

11/22/2023 3:35:38 PM
Autodesk Docs://23002327.00 - Shiprock Pinnacle Hotel & Restaurant/MEP22_23002327.00_Shiprock Pinnacle Restaurant_C.rvt
DYRON MURPHY ARCHITECTS, P.C.

2 SECOND FLOOR PIPING PLAN

1/8" = 1'-0"

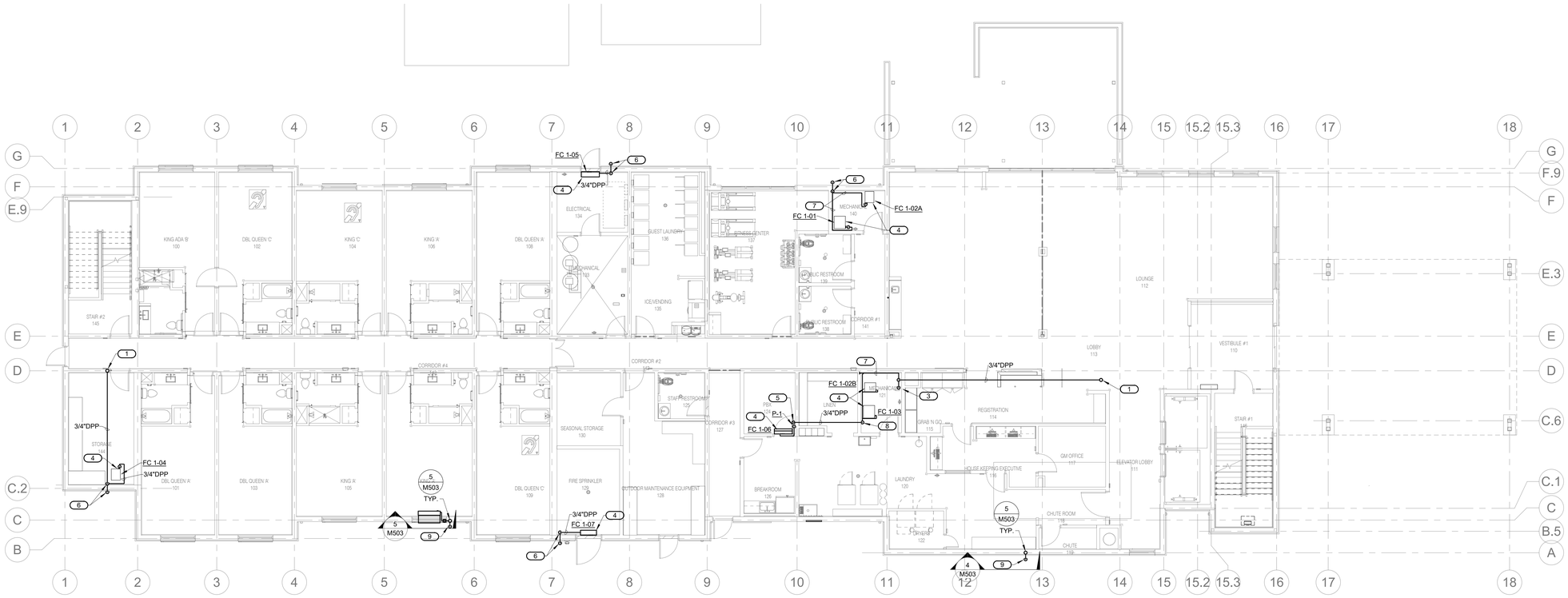

1 FIRST FLOOR PIPING PLAN

1/8" = 1'-0"

KEYNOTES: (#)

1. 3/4" CONDENSATE DRAIN LINE DOWN TO ABOVE FIRST FLOOR CEILING FROM ABOVE.
2. 3/4" CONDENSATE PIPING DOWN IN WALL FROM LEVEL ABOVE TO LEVEL BELOW.
3. ROUTE 3/4" CONDENSATE DOWN ALONG WALL AND TERMINATE WITH ELBOW ABOVE FLOOR SINK. PROVIDE AIR GAP ABOVE SINK RIM.
4. MANUFACTURER'S REFRIGERANT LINESET. SIZE, ROUTE, INSULATE AND INSTALL PER MANUFACTURER'S RECOMMENDATIONS. ROUTE REFRIGERANT PIPING UP TO ASSOCIATED OUTDOOR UNIT ON ROOF.
5. CONDENSATE PIPING UP FROM DISCHARGE OF PUMP. ROUTE DRAIN LINE UP HIGH ENOUGH TO PROVIDE PROPER SLOPE TO GRAVITY DRAIN.
6. ROUTE 3/4" CONDENSATE DOWN ALONG WALL TURN OUT THROUGH WALL AND TERMINATE WITH ELBOW ABOVE LANDSCAPING.
7. RACK CONDENSATE DRAIN LINE ON WALL.
8. 3/4" CONDENDATE DRAIN LINE DOWN ALONG WALL.
9. ROUTE 3/4" CONDENSATE DRAIN LINE DOWN IN WALL FROM PTAC UNITS, TURN OUT AND TERMINATE WITH ELBOW ABOVE LANDSCAPING. REFER TO RISER DIAGRAM SHEET M503 FOR TYPICAL PTAC UNIT CONDENSATE ROUTING.
10. ROUTE 3/4" CONDENSATE DRAIN LINE UP/DOWN IN WALL FROM PTAC UNITS. REFER TO RISER DIAGRAM SHEET M503 FOR TYPICAL PTAC UNIT CONDENSATE ROUTING.

SHEET NOTES:

1. ACCESS DOORS ARE REQUIRED FOR ALL VALVES INSTALLED ABOVE INACCESSIBLE CEILINGS. COORDINATE EXACT LOCATION OF ALL ACCESS DOORS WITH ARCHITECT PRIOR TO INSTALLATION.
2. THE MECHANICAL CONTRACTOR SHALL COORDINATE LOCATION AND ROUTING OF HVAC EQUIPMENT AND DUCTWORK WITH OTHER TRADES PRIOR TO COMMENCING WORK.
3. THE CUTTING, NOTCHING AND BORING OF HOLES IN FLOOR JOIST AND WALL STUDS SHALL BE IN ACCORDANCE WITH THE LATEST APPROVED EDITION OF THE INTERNATIONAL BUILDING CODE.
4. CONTRACTOR SHALL BE RESPONSIBLE FOR ALL CUTTING AND PATCHING AS REQUIRED TO ACCOMMODATE HIS WORK.
5. REFER TO THE MECHANICAL DETAILS THAT APPLY TO THE WORK ON THIS DRAWING. THESE DIAGRAMS PROVIDE GUIDANCE AS TO INSTALLATION INTENT AND DO NOT NECESSARILY SHOW ALL COMPONENTS REQUIRED.
6. CONTRACTOR TO COORDINATE WHAT TIME OF DAY THE WORK IS TO OCCUR, HOW MANY SHIFTS PER DAY, IF WEEKENDS, NIGHTS, HOLIDAYS ARE REQUIRED PRIOR TO SUBMITTING BID.
7. CONTRACTOR TO GIVE WRITTEN NOTIFICATION OF ANY INTERRUPTION OF SERVICES A MINIMUM OF THREE WORKING DAYS PRIOR TO COMMENCING WORK.

IMEG
5000 E PIMA CENTER PARKWAY
SUITE 320
SCOTTSDALE, AZ 85258
P: 480.222.3771
www.imegcorp.com

IMEG CORP. RESERVES PROPRIETARY RIGHTS, INCLUDING COPYRIGHTS, TO THIS DRAWING AND THE DATA SHOWN THEREON. SAID DRAWING AND/OR DATA ARE THE EXCLUSIVE PROPERTY OF IMEG CORP. AND SHALL NOT BE USED OR REPRODUCED FOR ANY OTHER PROJECT WITHOUT THE EXPRESS WRITTEN APPROVAL AND PARTICIPATION OF IMEG CORP. ©2023 IMEG CORP.

0 1 2 3
REF. SCALE IN INCHES

PROJECT #23002327.00

STAMP

BENJAMIN W. YEUNG
NEW MEXICO
LICENSED PROFESSIONAL ENGINEER

11.03.2023

DYRON MURPHY ARCHITECTS, P.C.
4505 Montbel Place NE, Albuquerque, New Mexico 87107

SHIPROCK PINNACLE HOTEL & RESTAURANT

SHIPROCK, NEW MEXICO

100% CONSTRUCTION DOCUMENTS

ISSUED FOR CONSTRUCTION

NOVEMBER 3, 2023

PROJECT NUMBER	DRAWN BY	PROJ MGR
2022.10	IMEG	IMEG

Sheet Title

FIRST & SECOND FLOOR PIPING PLAN - HOTEL

Sheet Number

of

M104

11/2/2023 3:33:22 PM Autodesk Docs://23002327.00 - Shiprock Pinnacle Hotel & Restaurant/MEP/2_23002327.00_Shiprock Pinnacle Hotel_C.rvt
DYRON MURPHY ARCHITECTS, P.C.

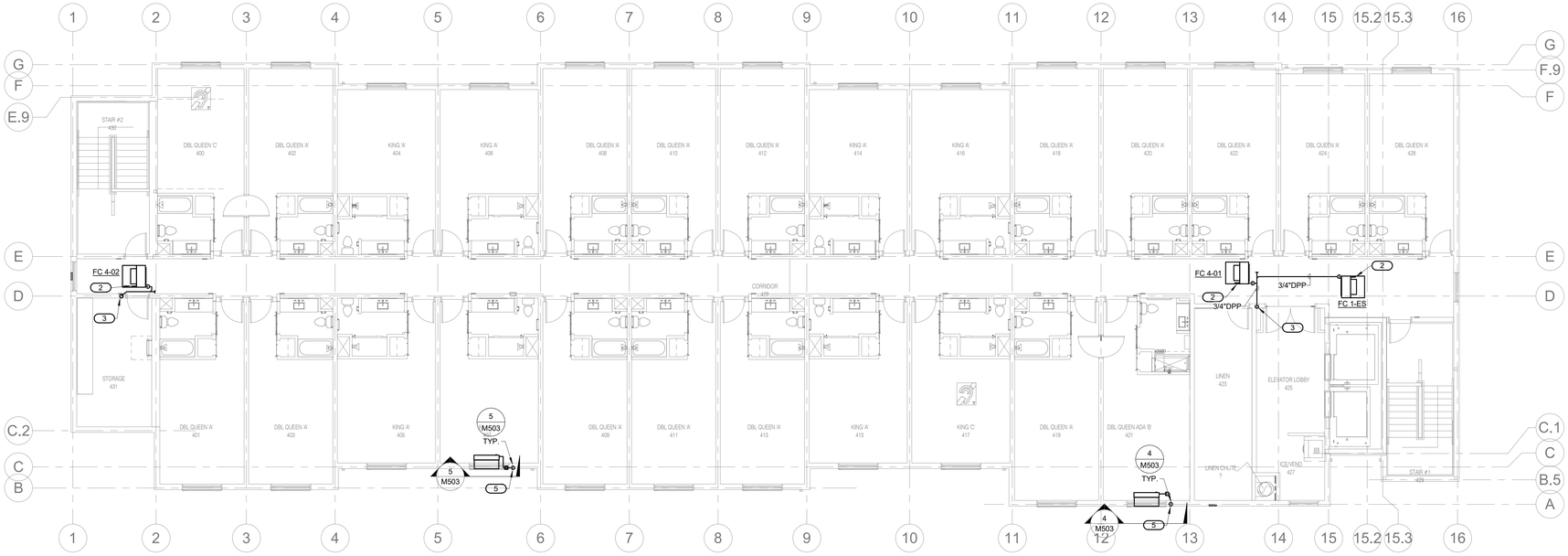

NORTH

2 FOURTH FLOOR PIPING PLAN

1/8" = 1'-0"

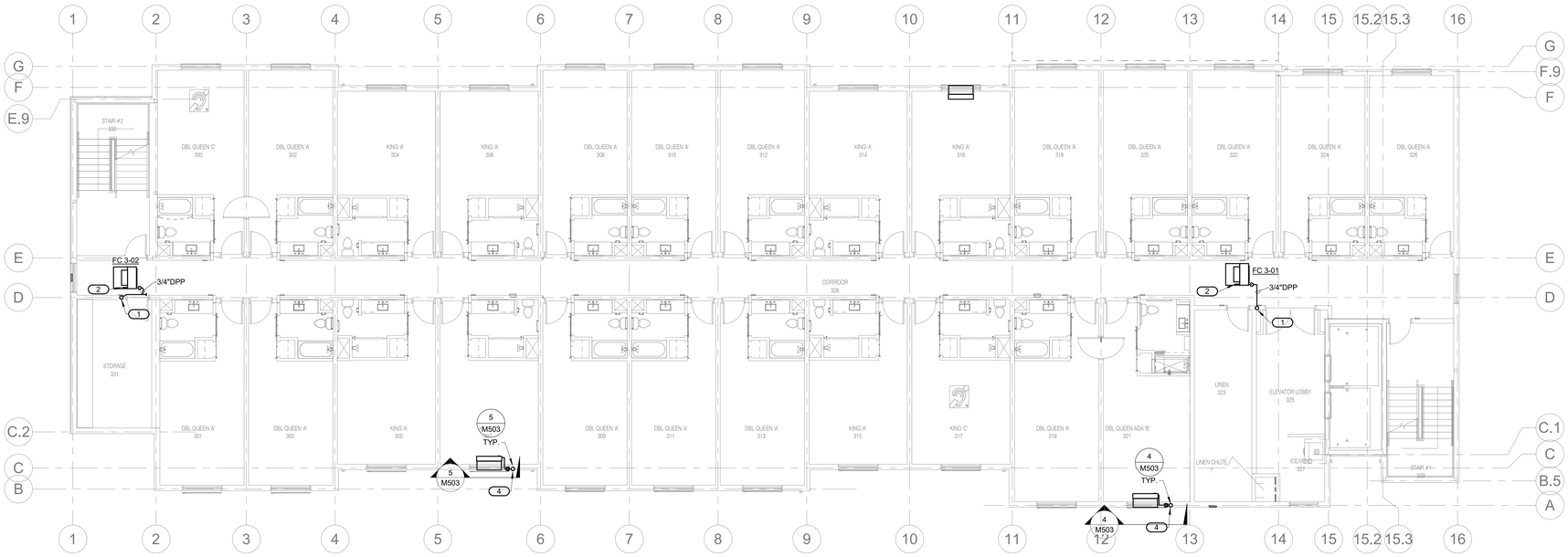

NORTH

1 THIRD FLOOR PIPING PLAN

1/8" = 1'-0"

KEYNOTES: (#)

1. 3/4" CONDENSATE DRAIN LINE DOWN IN WALL FROM ABOVE TO LEVEL BELOW.
2. MANUFACTURER'S REFRIGERANT LINESET. SIZE, ROUTE, INSULATE AND INSTALL PER MANUFACTURER'S RECOMMENDATIONS. ROUTE REFRIGERANT PIPING UP TO ASSOCIATED OUTDOOR UNIT ON ROOF.
3. 3/4" CONDENSATE DRAIN LINE DOWN IN WALL TO LEVEL BELOW.
4. ROUTE 3/4" CONDENSATE DRAIN LINE UP/DOWN IN WALL FROM PTAC UNITS. REFER TO RISER DIAGRAM SHEET M503 FOR TYPICAL PTAC UNIT CONDENSATE ROUTING.
5. ROUTE 3/4" CONDENSATE DRAIN LINE DOWN IN WALL FROM PTAC UNITS. REFER TO RISER DIAGRAM SHEET M503 FOR TYPICAL PTAC UNIT CONDENSATE ROUTING.

SHEET NOTES:

1. ACCESS DOORS ARE REQUIRED FOR ALL VALVES INSTALLED ABOVE INACCESSIBLE CEILINGS. COORDINATE EXACT LOCATION OF ALL ACCESS DOORS WITH ARCHITECT PRIOR TO INSTALLATION.
2. THE MECHANICAL CONTRACTOR SHALL COORDINATE LOCATION AND ROUTING OF HVAC EQUIPMENT AND DUCTWORK WITH OTHER TRADES PRIOR TO COMMENCING WORK.
3. THE CUTTING, NOTCHING AND BORING OF HOLES IN FLOOR JOIST AND WALL STUDS SHALL BE IN ACCORDANCE WITH THE LATEST APPROVED EDITION OF THE INTERNATIONAL BUILDING CODE.
4. CONTRACTOR SHALL BE RESPONSIBLE FOR ALL CUTTING AND PATCHING AS REQUIRED TO ACCOMMODATE HIS WORK.
5. REFER TO THE MECHANICAL DETAILS THAT APPLY TO THE WORK ON THIS DRAWING. THESE DIAGRAMS PROVIDE GUIDANCE AS TO INSTALLATION INTENT AND DO NOT NECESSARILY SHOW ALL COMPONENTS REQUIRED.
6. CONTRACTOR TO COORDINATE WHAT TIME OF DAY THE WORK IS TO OCCUR, HOW MANY SHIFTS PER DAY, IF WEEKENDS, NIGHTS, HOLIDAYS ARE REQUIRED PRIOR TO SUBMITTING BID.
7. CONTRACTOR TO GIVE WRITTEN NOTIFICATION OF ANY INTERRUPTION OF SERVICES A MINIMUM OF THREE WORKING DAYS PRIOR TO COMMENCING WORK.

IMEG
9000 E PIMA CENTER PARKWAY
SUITE 320
SCOTTSDALE, AZ 85258
P: 480.222.3771
www.imegcorp.com

IMEG CORP. RESERVES PROPRIETARY RIGHTS, INCLUDING COPYRIGHTS, TO THIS DRAWING AND THE DATA SHOWN THEREON. SAID DRAWING AND/OR DATA ARE THE EXCLUSIVE PROPERTY OF IMEG CORP. AND SHALL NOT BE USED OR REPRODUCED FOR ANY OTHER PROJECT WITHOUT THE EXPRESS WRITTEN APPROVAL AND PARTICIPATION OF IMEG CORP. ©2023 IMEG CORP.

0 1 2 3
REF. SCALE IN INCHES
PROJECT #23002327.00

STAMP

BENJAMIN W. YEUNG
NEW MEXICO
LICENSED PROFESSIONAL ENGINEER

11.03.2023

DYRON MURPHY ARCHITECTS, P.C.
4505 Montbel Place NE, Albuquerque, New Mexico 87107

SHIPROCK PINNACLE HOTEL & RESTAURANT

SHIPROCK, NEW MEXICO

100% CONSTRUCTION DOCUMENTS

ISSUED FOR CONSTRUCTION

NOVEMBER 3, 2023

PROJECT NUMBER	DRAWN BY	PROJ MGR
2022.10	IMEG	IMEG

THIRD & FOURTH FLOOR PIPING PLAN - HOTEL

Sheet Title

Sheet Number

of

M105

1/12/2023 3:33:28 PM Autodesk Docs://23002327.00 - Shiprock Pinnacle Hotel & Restaurant/MEP2_23002327.00_Shiprock Pinnacle Hotel_C.rvt
DYRON MURPHY ARCHITECTS, P.C.

KEYNOTES: (#)

1. 3/4 " CONDENSATE PIPING DOWN FROM ROOFTOP UNIT.
2. ROUTE 3/4" CONDENSATE DOWN IN WALL AND TERMINATE WITH ELBOW ABOVE FLOOR SINK. PROVIDE AIR GAP ABOVE RIM OF SINK.
3. ROUTE 3/4" CONDENSATE DOWN IN WALL AND TERMINATE WITH ELBOW ABOVE MOP SINK. PROVIDE AIR GAP ABOVE RIM OF SINK.
4. ROUTE 3/4" CONDENSATE DOWN WALL AND CONNECT TO IN TAILPIECE.
5. MANUFACTURER'S REFRIGERANT LINESET. SIZE, ROUTE, AND INSTALL PER MANUFACTURER'S RECOMMENDATIONS. ROUTE REFRIGERANT PIPING UP TO ASSOCIATED OUTDOOR UNIT ON ROOF.
6. ROUTE 3/4" CONDENSATE DRAIN LINE RACKED ON WALL OF MECH. ROOM.
7. 3/4" CONDENSATE DOWN ALONG WALL AND TERMINATE WITH ELBOW ABOVE FLOOR SINK. PROVIDE AIR GAP ABOVE RIM OF SINK.
8. ROUTE 1" CONDENSATE DOWN IN WALL AND TERMINATE WITH ELBOW ABOVE MOP SINK. PROVIDE AIR GAP ABOVE RIM OF SINK.

SHEET NOTES:

1. ACCESS DOORS ARE REQUIRED FOR ALL VALVES INSTALLED ABOVE INACCESSIBLE CEILINGS. COORDINATE EXACT LOCATION OF ALL ACCESS DOORS WITH ARCHITECT PRIOR TO INSTALLATION.
2. THE MECHANICAL CONTRACTOR SHALL COORDINATE LOCATION AND ROUTING OF HVAC EQUIPMENT AND DUCTWORK WITH OTHER TRADES PRIOR TO COMMENCING WORK.
3. THE CUTTING, NOTCHING AND BORING OF HOLES IN FLOOR JOIST AND WALL STUDS SHALL BE IN ACCORDANCE WITH THE LATEST APPROVED EDITION OF THE INTERNATIONAL BUILDING CODE.
4. CONTRACTOR SHALL BE RESPONSIBLE FOR ALL CUTTING AND PATCHING AS REQUIRED TO ACCOMMODATE HIS WORK.
5. REFER TO THE MECHANICAL DETAILS THAT APPLY TO THE WORK ON THIS DRAWING. THESE DIAGRAMS PROVIDE GUIDANCE AS TO INSTALLATION INTENT AND DO NOT NECESSARILY SHOW ALL COMPONENTS REQUIRED.
6. CONTRACTOR TO COORDINATE WHAT TIME OF DAY THE WORK IS TO OCCUR, HOW MANY SHIFTS PER DAY, IF WEEKENDS, NIGHTS, HOLIDAYS ARE REQUIRED PRIOR TO SUBMITTING BID.
7. CONTRACTOR TO GIVE WRITTEN NOTIFICATION OF ANY INTERRUPTION OF SERVICES A MINIMUM OF THREE WORKING DAYS PRIOR TO COMMENCING WORK.

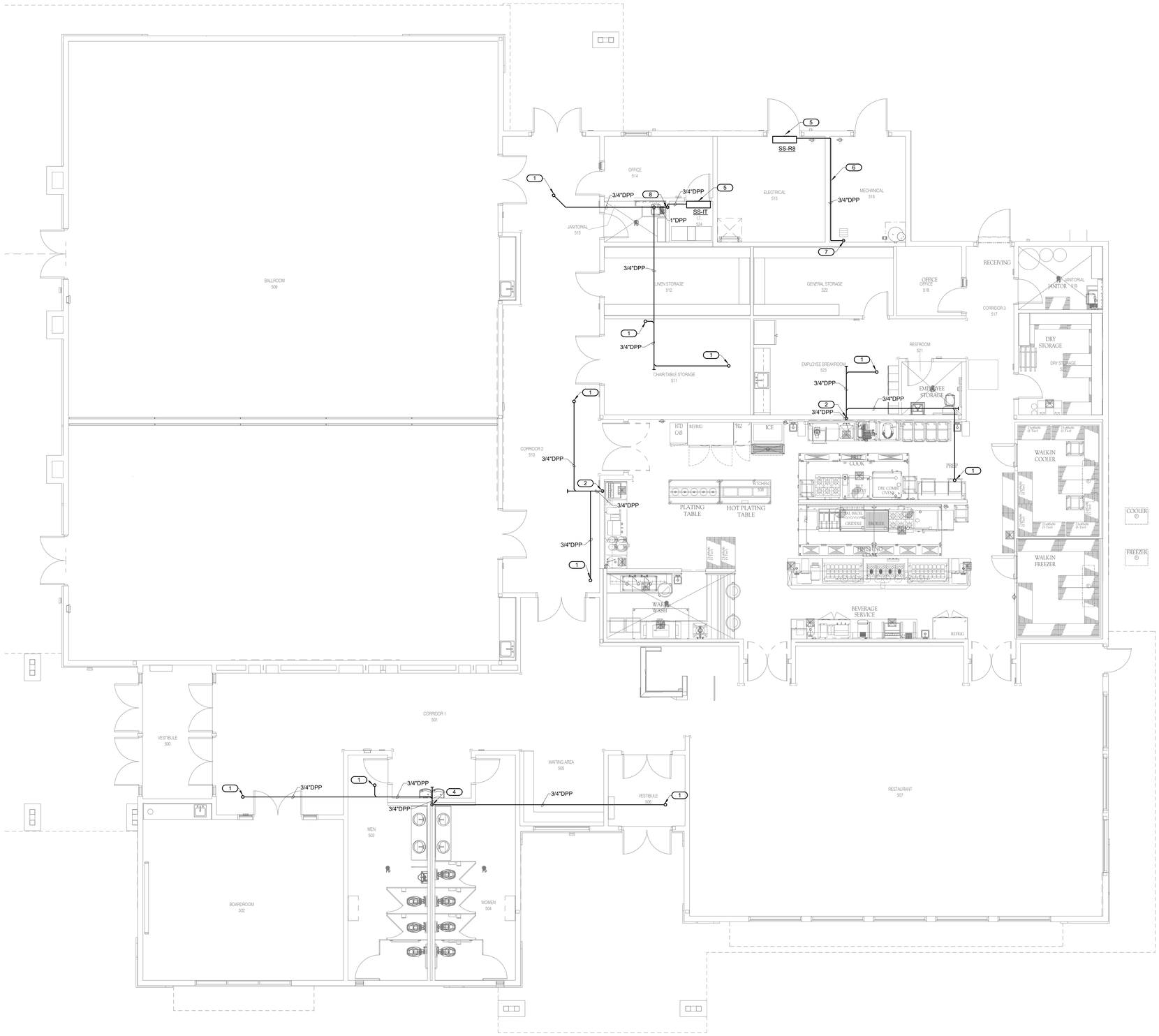

1 RESTAURANT PIPING PLAN

3/16" = 1'-0"

NORTH

IMEG
9000 E. PIMA CENTER PARKWAY
SUITE 320
SCOTTSDALE, AZ 85258
P: 480.222.3771
www.imegcorp.com

IMEG CORP. RESERVES PROPRIETARY RIGHTS, INCLUDING COPYRIGHTS, TO THIS DRAWING AND THE DATA SHOWN THEREON. SAID DRAWING AND/OR DATA ARE THE EXCLUSIVE PROPERTY OF IMEG CORP. AND SHALL NOT BE USED OR REPRODUCED FOR ANY OTHER PROJECT WITHOUT THE EXPRESS WRITTEN APPROVAL AND PARTICIPATION OF IMEG CORP. ©2023 IMEG CORP.

REF. SCALE IN INCHES 0 1 2 3 PROJECT #23002327.00

STAMP

BENJAMIN W. YEURG NEW MEXICO 21000 LICENSED PROFESSIONAL ENGINEER

11.03.2023

DYRON MURPHY ARCHITECTS, P.C.

4505 Montbel Place NE, Albuquerque, New Mexico 87107

SHIPROCK PINNACLE HOTEL & RESTAURANT

SHIPROCK, NEW MEXICO

100% CONSTRUCTION DOCUMENTS

ISSUED FOR CONSTRUCTION

NOVEMBER 3, 2023

PROJECT NUMBER	DRAWN BY	PROJ MGR
2022.10	IMEG	IMEG

MECHANICAL PIPING PLAN - RESTAURANT

Sheet Title

Sheet Number of

M106

11/2/2023 3:35:43 PM Autodesk Docs://23002327.00 - Shiprock Pinnacle Hotel & Restaurant/MEP/2_23002327.00_Shiprock Pinnacle Restaurant_C.rvt
DYRON MURPHY ARCHITECTS, P.C.

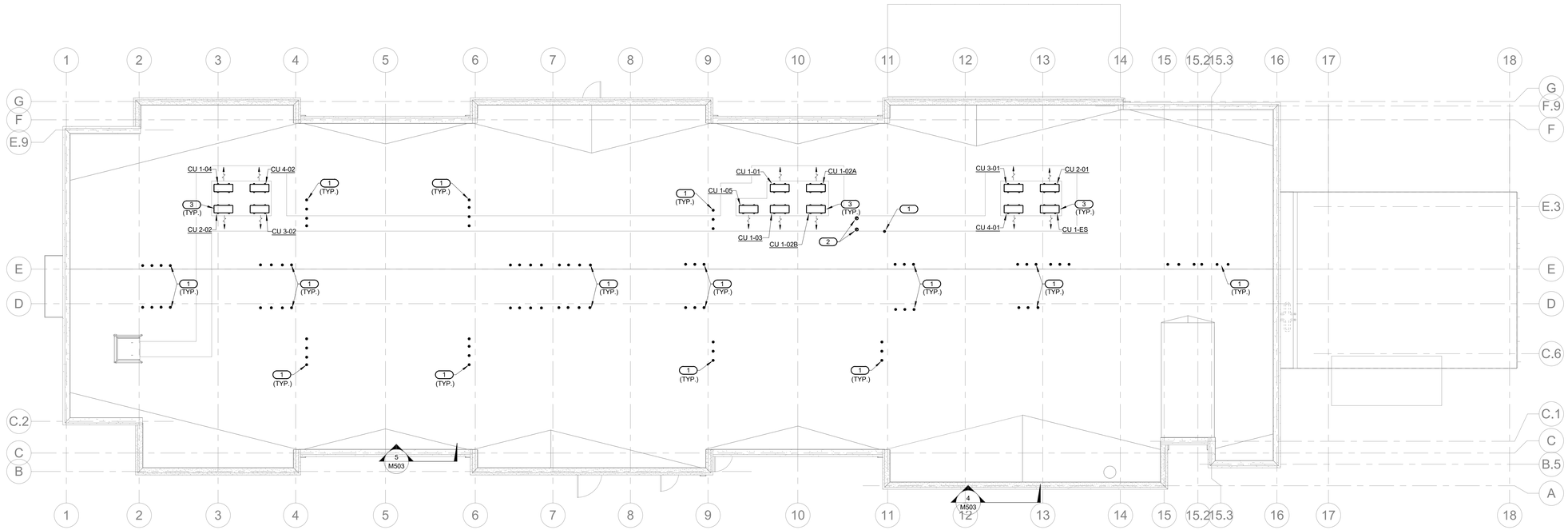

1 MECHANICAL ROOF PLAN

1/8" = 1'-0"

NORTH

SHEET NOTES:

1. THE MECHANICAL CONTRACTOR SHALL VERIFY THE LOCATION OF ALL ROOF MOUNTED EQUIPMENT AND ROOF PENETRATIONS WITH ARCHITECT AND STRUCTURAL ENGINEER PRIOR TO COMMENCING WORK.
2. THE MECHANICAL CONTRACTOR SHALL COORDINATE LOCATION AND ROUTING OF HVAC EQUIPMENT AND DUCTWORK WITH OTHER TRADES PRIOR TO COMMENCING WORK.
3. ALL EXHAUST OUTLETS SHALL BE LOCATED MIN. OF 10'-0" FROM ANY OUTSIDE AIR INTAKES.
4. THE CUTTING, NOTCHING AND BORING OF HOLES IN ROOF JOIST SHALL BE IN ACCORDANCE WITH THE LATEST APPROVED EDITION OF THE INTERNATIONAL BUILDING CODE.
5. CONTRACTOR SHALL BE RESPONSIBLE FOR ALL CUTTING AND PATCHING AS REQUIRED TO ACCOMMODATE HIS WORK.
6. REFER TO THE MECHANICAL DETAILS THAT APPLY TO THE WORK ON THIS DRAWING. THESE DIAGRAMS PROVIDE GUIDANCE AS TO INSTALLATION INTENT AND DO NOT NECESSARILY SHOW ALL COMPONENTS REQUIRED.
7. APPLIANCES SERVING DIFFERENT AREAS OF A BUILDING OTHER THAN WHERE THEY ARE INSTALLED SHALL BE PERMANENTLY MARKED IN AN APPROVED MANNER THAT UNIQUELY IDENTIFIES THE APPLIANCE AND THE AREA IT SERVES.

KEYNOTES: (#)

1. 4" EXHAUST DUCT UP THROUGH ROOF TO APPROVED ROOF CAP.
2. 6" EXHAUST DUCT UP THROUGH ROOF TO APPROVED ROOF CAP.
3. PROVIDE MANUFACTURER'S REFRIGERANT LINESET. SIZE, ROUTE, INSULATE AND INSTALL PER MANUFACTURER'S RECOMMENDATIONS. PROVIDE VAPOR BARRIER AND ALUMINUM JACKET OVER ALL PIPING INSULATION ON EXTERIOR OF BUILDING.

IMEG
9000 E PIMA CENTER PARKWAY
SUITE 320
SCOTTSDALE, AZ 85258
P. 480.222.3771
www.imegcorp.com

IMEG CORP. RESERVES PROPRIETARY RIGHTS, INCLUDING COPYRIGHTS, TO THIS DRAWING AND THE DATA SHOWN THEREON. SAID DRAWING AND/OR DATA ARE THE EXCLUSIVE PROPERTY OF IMEG CORP. AND SHALL NOT BE USED OR REPRODUCED FOR ANY OTHER PROJECT WITHOUT THE EXPRESS WRITTEN APPROVAL AND PARTICIPATION OF IMEG CORP. ©2023 IMEG CORP.

0 1 2 3
REF. SCALE IN INCHES PROJECT #23002327.00

STAMP

BENJAMIN W. YEUNG
NEW MEXICO
LICENSED PROFESSIONAL ENGINEER

11.03.2023

DYRON MURPHY ARCHITECTS, P.C.
4505 Montbel Place NE, Albuquerque, New Mexico 87107

SHIPROCK PINNACLE HOTEL & RESTAURANT

SHIPROCK, NEW MEXICO

100% CONSTRUCTION DOCUMENTS

ISSUED FOR CONSTRUCTION

NOVEMBER 3, 2023

PROJECT NUMBER	DRAWN BY	PROJ MGR
2022.10	IMEG	IMEG

MECHANICAL ROOF PLAN - HOTEL

Sheet Title

Sheet Number of

M112

11/2/2023 3:33:39 PM Autodesk Docs://23002327.00 - Shiprock Pinnacle Hotel & Restaurant/MEP/2_23002327.00_Shiprock Pinnacle Hotel_C.rvt
DYRON MURPHY ARCHITECTS, P.C.

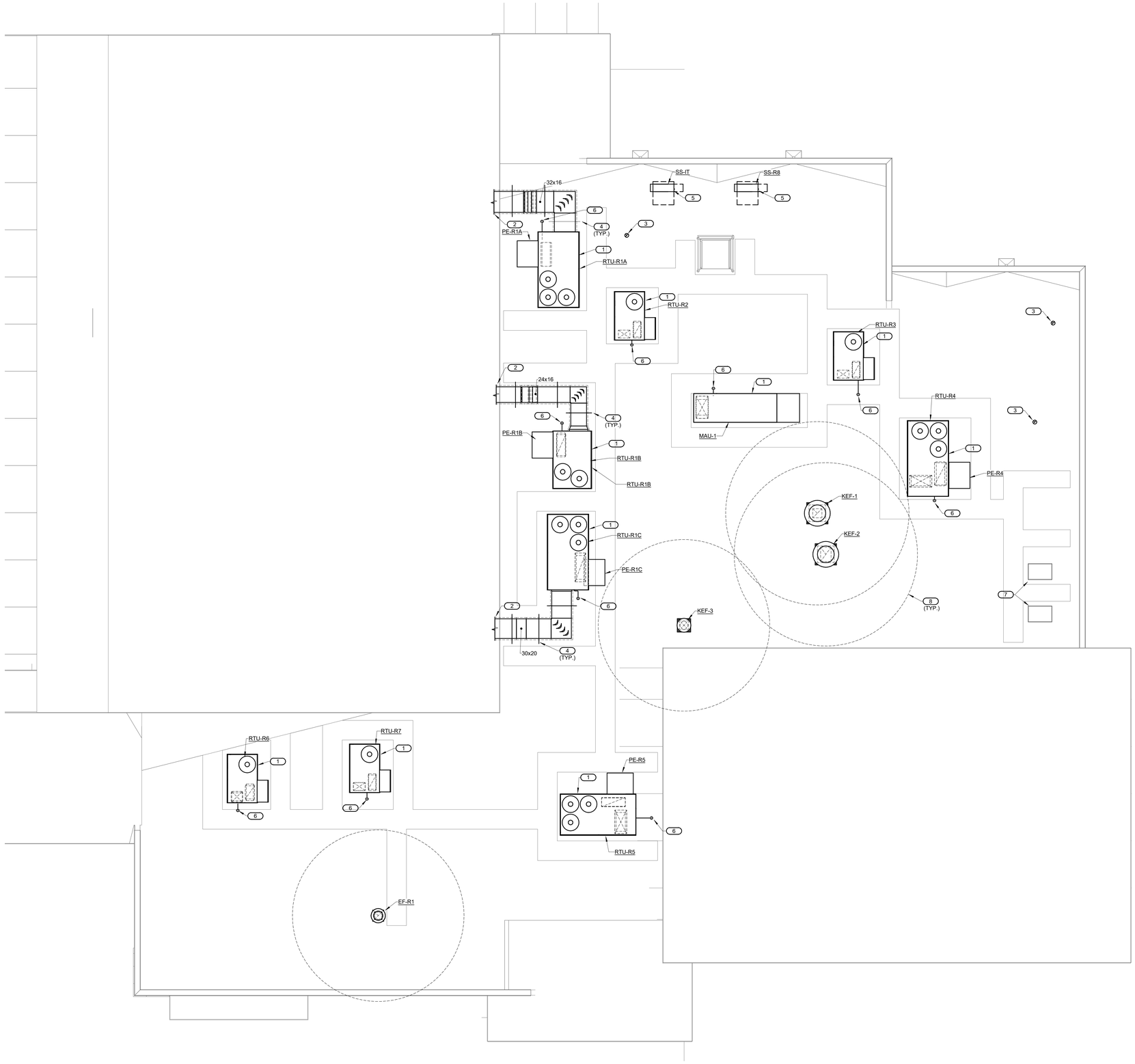

1 **MECHANICAL ROOF PLAN - RESTARUANT**
3/16" = 1'-0"

NORTH

KEYNOTES: #

1. NEW ROOFTOP UNIT SET LEVEL ON NEW ROOF CURB. INSTALL AS PER MANUFACTURERS RECOMMENDATIONS FOR PROPER CLEARANCES.
2. SUPPLY DUCT THROUGH SIDEWALL. REFER TO SHEET M103 FOR CONTINUATION.
3. 6" DIA. EXHAUST DUCT UP THROUGH ROOF TO APPROVED ROOF CAP.
4. PROVIDE DUCT SUPPORTS AS REQUIRED. MIRO INDUSTRIES 6-DS OR EQUAL.
5. PROVIDE MANUFACTURERS REFRIGERANT PIPING LINE SET, SIZE, INSULATE, ROUTE, AND INSTALL AS PER MANUFACTURES RECOMMENDATIONS, PROVIDE ALUMINUM JACKET OVER ALL REFRIGERANT PIPING INSULATION ON EXTERIOR OF BUILDING.
6. 3/4" TRAPPED CONDENSATE PIPING DOWN THROUGH ROOF TO LEVEL BELOW. REFER TO M106 FOR CONTINUATION.
7. PROPOSED LOCATIONS FOR CONDENSING UNITS PROVIDED BY OTHERS FOR WALK-IN COOLER AND FREEZER. FOR REFERENCE ONLY.
8. LINE REPRESENTS 10'-0" CLEARANCE FROM EXHAUST TERMINATIONS.

SHEET NOTES:

1. DUCT SIZES SHOWN ARE THE CLEAR INSIDE DIMENSIONS.
2. THE MECHANICAL CONTRACTOR SHALL VERIFY THE LOCATION OF ALL ROOF MOUNTED EQUIPMENT AND ROOF PENETRATIONS WITH ARCHITECT AND STRUCTURAL ENGINEER PRIOR TO COMMENCING WORK.
3. THE MECHANICAL CONTRACTOR SHALL COORDINATE LOCATION AND ROUTING OF HVAC EQUIPMENT AND DUCTWORK WITH OTHER TRADES PRIOR TO COMMENCING WORK.
4. ALL EXHAUST OUTLETS SHALL BE LOCATED MIN. OF 10'-0" FROM ANY OUTSIDE AIR INTAKES.
5. THE CUTTING, NOTCHING AND BORING OF HOLES IN ROOF JOIST AND WALL STUDS SHALL BE IN ACCORDANCE WITH THE LATEST APPROVED EDITION OF THE INTERNATIONAL BUILDING CODE.
6. CONTRACTOR SHALL BE RESPONSIBLE FOR ALL CUTTING AND PATCHING AS REQUIRED TO ACCOMMODATE HIS WORK.
7. REFER TO THE MECHANICAL DIAGRAMS THAT APPLY TO THE WORK ON THIS DRAWING. THESE DIAGRAMS PROVIDE GUIDANCE AS TO INSTALLATION INTENT AND DO NOT NECESSARILY SHOW ALL COMPONENTS REQUIRED.
8. APPLIANCES SERVING DIFFERENT AREAS OF A BUILDING OTHER THAN WHERE THEY ARE INSTALLED SHALL BE PERMANENTLY MARKED IN AN APPROVED MANNER THAT UNIQUELY IDENTIFIES THE APPLIANCE AND THE AREA IT SERVES.
9. ALL RECTANGULAR DUCT ELBOWS SHALL HAVE TURNING VANES.

IMEG
9000 E PIMA CENTER PARKWAY
SUITE 320
SCOTTSDALE, AZ 85258
P: 480.222.3771
www.imegcorp.com

IMEG CORP. RESERVES PROPRIETARY RIGHTS, INCLUDING COPYRIGHTS, TO THIS DRAWING AND THE DATA SHOWN THEREON. SAID DRAWING AND/OR DATA ARE THE EXCLUSIVE PROPERTY OF IMEG CORP. AND SHALL NOT BE USED OR REPRODUCED FOR ANY OTHER PROJECT WITHOUT THE EXPRESS WRITTEN APPROVAL AND PARTICIPATION OF IMEG CORP. ©2023 IMEG CORP.

0 1 2 3
REF. SCALE IN INCHES
PROJECT #23002327.00

STAMP

BENJAMIN W. YEUNG
NEW MEXICO
LICENSED PROFESSIONAL ENGINEER
11.03.2023

DYRON MURPHY ARCHITECTS, P.C.
4505 Montbel Place NE, Albuquerque, New Mexico 87107

SHIPROCK PINNACLE HOTEL & RESTAURANT

SHIPROCK, NEW MEXICO

100% CONSTRUCTION DOCUMENTS

ISSUED FOR CONSTRUCTION

NOVEMBER 3, 2023

PROJECT NUMBER	DRAWN BY	PROJ MGR
2022.10	IMEG	IMEG

MECHANICAL ROOF PLAN - RESTAURANT

Sheet Title

Sheet Number of

M114

11/3/2023 3:41:54 PM Autodesk Docs://23002327.00 - Shiprock Pinnacle Hotel & Restaurant/MEP22_23002327.00_Shiprock Pinnacle Restaurant_C.rvt
DYRON MURPHY ARCHITECTS, P.C.

KEYNOTES: (#)

1. 4" EXHAUST DUCT UP IN CHASE, THROUGH ROOF AND CONNECT TO ROOF CAP. EXHAUST DUCT FROM OTHER FLOOR MAY NOT BE SHOWN. MECHANICAL CONTRACTOR SHALL FIELD COORDINATE DUCT IN CHASE FROM OTHER FLOORS
2. 6" EXHAUST DUCT FROM FIRST FLOOR RESTROOMS UP IN CHASE, THROUGH FLOOR AND CONNECT TO ROOF CAP.
3. PROVIDE WALL MOUNTED THERMOSTAT AND WIRING CONNECTED TO PTAC UNIT.

SHEET NOTES:

1. REMOTE VOLUME DAMPERS ARE REQUIRED FOR ALL DAMPERS INSTALLED ABOVE INACCESSIBLE CEILINGS.
2. VERIFY LOCATION OF ALL THERMOSTATS WITH ARCHITECT PRIOR TO INSTALLATION. MOUNT ALL THERMOSTATS @48" A.F.F. IN ACCORDANCE WITH ADA STANDARDS. PROVIDE LOCKING COVERS WHERE REQUESTED (COORDINATE WITH OWNER).
3. VERIFY AND COORDINATE FRAME AND BORDER TYPE REQUIREMENTS FOR AIR DEVICES WITH ARCHITECTURAL CEILING PLANS PRIOR TO ORDERING.
4. DUCT SIZES SHOWN ARE THE CLEAR INSIDE DIMENSIONS.
5. THE MECHANICAL CONTRACTOR SHALL COORDINATE LOCATION AND ROUTING OF HVAC EQUIPMENT AND DUCTWORK WITH OTHER TRADES PRIOR TO COMMENCING WORK.
6. THE CUTTING, NOTCHING AND BORING OF HOLES IN FLOOR JOIST AND WALL STUDS SHALL BE IN ACCORDANCE WITH THE LATEST APPROVED EDITION OF THE INTERNATIONAL BUILDING CODE.
7. CONTRACTOR SHALL BE RESPONSIBLE FOR ALL CUTTING AND PATCHING AS REQUIRED TO ACCOMMODATE HIS WORK.
8. REFER TO THE MECHANICAL DETAILS THAT APPLY TO THE WORK ON THIS DRAWING. THESE DETAILS PROVIDE GUIDANCE AS TO INSTALLATION INTENT AND DO NOT NECESSARILY SHOW ALL COMPONENTS REQUIRED.
9. APPLIANCES SERVING DIFFERENT AREAS OF A BUILDING OTHER THAN WHERE THEY ARE INSTALLED SHALL BE PERMANENTLY MARKED IN AN APPROVED MANNER THAT UNIQUELY IDENTIFIES THE APPLIANCE AND THE AREA IT SERVES.
10. PROVIDE 1" ACCOUSTICAL DUCT LINER FOR ALL TRANSFER AIR DUCT.
11. ALL RECTANGULAR DUCT ELBOWS SHALL HAVE TURNING VANES.

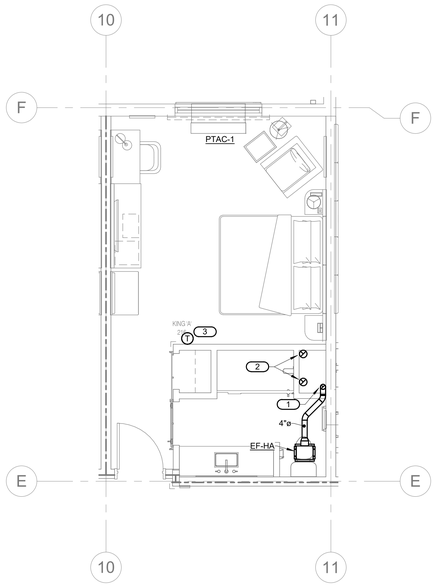

1 TYPICAL UNIT PLAN - KING
1/4" = 1'-0"

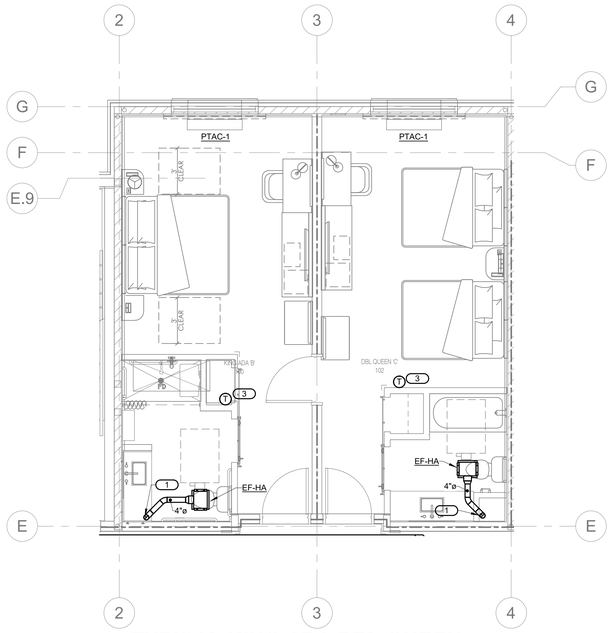

2 TYPICAL KING ADA DBL QUEEN JOINED ROOM
1/4" = 1'-0"

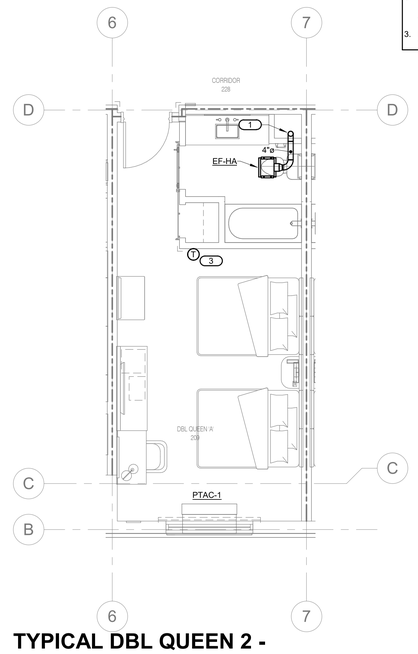

3 TYPICAL DBL QUEEN 2 - MECHANICAL
1/4" = 1'-0"

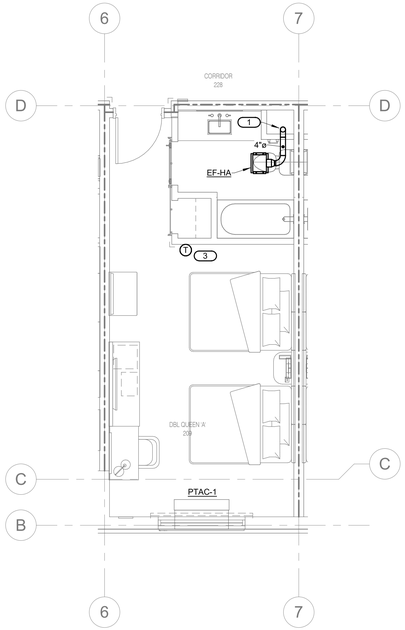

4 TYPICAL UNIT PLAN - DBL QN2
1/4" = 1'-0"

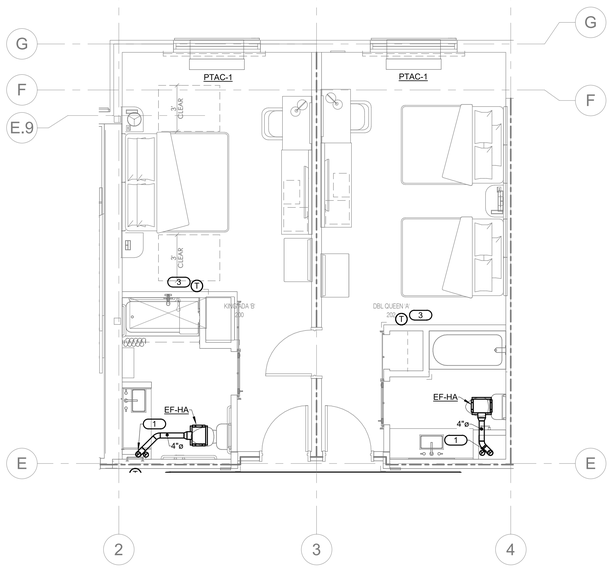

5 TYPICAL KING ADA = DBL QUEEN 2 - MECHANICAL
1/4" = 1'-0"

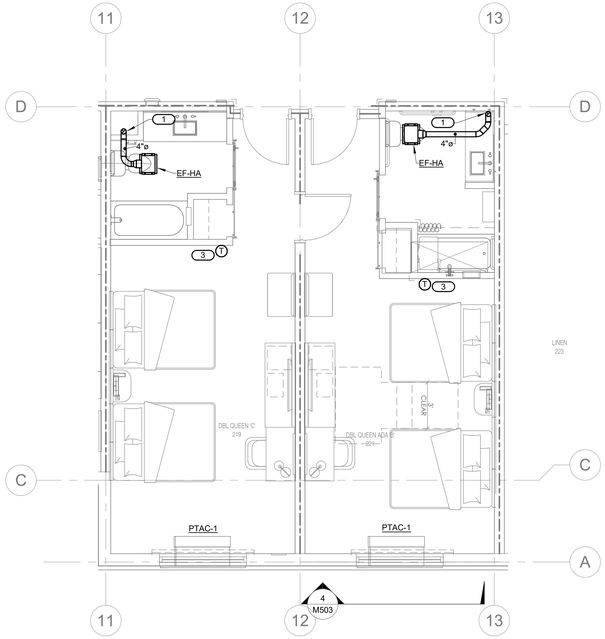

6 TYPICAL QUEEN ADA - MECHANICAL
1/4" = 1'-0"

IMEG
9000 E PIMA CENTER PARKWAY
SUITE 320
SCOTTSDALE, AZ 85258
P: 480.222.3771
www.imegcorp.com

IMEG CORP. RESERVES PROPRIETARY RIGHTS, INCLUDING COPYRIGHTS, TO THIS DRAWING AND THE DATA SHOWN THEREON. SAID DRAWING AND/OR DATA ARE THE EXCLUSIVE PROPERTY OF IMEG CORP. AND SHALL NOT BE USED OR REPRODUCED FOR ANY OTHER PROJECT WITHOUT THE EXPRESS WRITTEN APPROVAL AND PARTICIPATION OF IMEG CORP. ©2023 IMEG CORP.

0 1 2 3
REF. SCALE IN INCHES
PROJECT #23002327.00

STAMP

BENJAMIN W. YEUNG
NEW MEXICO
LICENSED PROFESSIONAL ENGINEER

11.03.2023

DYRON MURPHY ARCHITECTS, P.C.
4505 Montbel Place NE, Albuquerque, New Mexico 87107

SHIPROCK PINNACLE HOTEL & RESTAURANT

SHIPROCK, NEW MEXICO

100% CONSTRUCTION DOCUMENTS

ISSUED FOR CONSTRUCTION

NOVEMBER 3, 2023

PROJECT NUMBER	DRAWN BY	PROJ MGR
2022.10	IMEG	IMEG

MECHANICAL UNIT PLANS - HOTEL

Sheet Title

Sheet Number of

M400

11/2/2023 3:33:56 PM Autodesk Docs://23002327.00 - Shiprock Pinnacle Hotel & Restaurant/MEP/2_23002327.00_Shiprock Pinnacle Hotel_C.rvt
DYRON MURPHY ARCHITECTS, P.C.

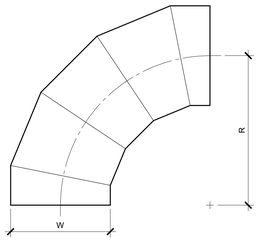

OVAL / ROUND
RADIUS ELBOW
SMOOTH OR 5 GORE (MINIMUM)
R/W = 1.5 (MINIMUM)

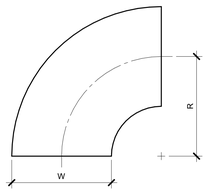

RECTANGULAR
RADIUS ELBOW
TYPE RE1
R/W = 1.0 (MINIMUM)
R/W < 1.0 SHALL BE TYPE RE3

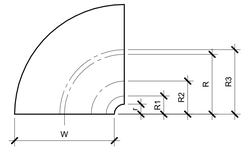

RECTANGULAR
RADIUS ELBOW WITH VANES
TYPE RE3

REFER TO SMACNA HVAC SYSTEMS DUCT DESIGN MANUAL, FOURTH EDITION, SECTION 5.14 "SPLITTER VANES" AND SMACNA HVAC DUCT CONSTRUCTION STANDARDS, THIRD EDITION, FIGURES 4-2 AND 4-9 AND CHARTS 4-1 AND 4-1M. ELBOW SHALL HAVE THREE SPLITTER VANES AND r/W = 0.10 (R/W = 0.60) UNLESS NOTED OTHERWISE.

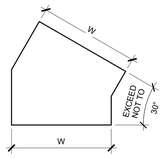

RECTANGULAR
MITERED ELBOW
TYPE RE6

USE ONLY AS PART OF OFFSETS AND TRANSITIONS PER FIGURE 4-7 TYPE 2 OR AS SHOWN ON DRAWINGS. OFFSETS ABOVE 30° SHALL BE TYPE RE1.

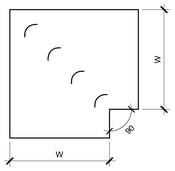

RECTANGULAR
MITERED ELBOW
WITH VANES
TYPE RE2

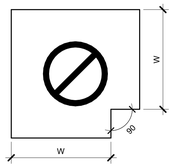

RECTANGULAR / OVAL / ROUND
MITERED ELBOW
WITHOUT VANES
TYPE RE4

NOT ALLOWED

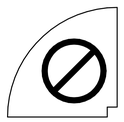

RECTANGULAR
RADIUS ELBOW WITH
SQUARE THROAT

NOT ALLOWED

NOTES:

1. BEAD, CROSSBREAK, AND REINFORCE FLAT SURFACES AS IN STRAIGHT DUCT.
2. REFER TO SPECIFICATIONS FOR ADDITIONAL INFORMATION.
3. DEFAULT ELBOW SHALL BE TYPE "RE1".
4. ELBOW TYPES SHALL BE INSTALLED AS SHOWN AND NOT BE SUBSTITUTED WITHOUT PERMISSION. EXCEPTION: RE1 OR RE3 MAY BE SUBSTITUTED FOR RE2.

1 DUCT - ELBOW CONSTRUCTION

NO SCALE
M_DF.0.05

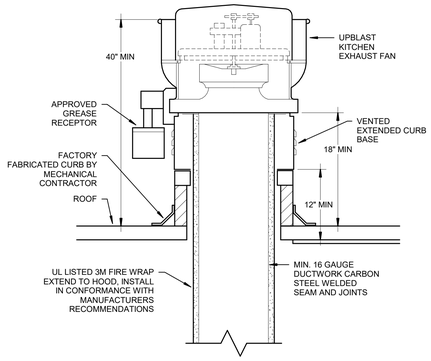

2 KITCHEN HOOD EXHAUST FAN

NO SCALE

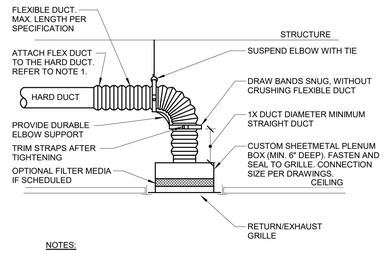

NOTES:

1. TO ATTACH FLEX DUCT TO THE HARD DUCT, TAPE THE INNER LINER TO THE HARD DUCT THEN ATTACH WITH TWO NYLON TIE WRAPS: ONE FOR THE INNER LINER AND ONE FOR THE OUTER SHELL. FOLD THE OUTER SHELL INSIDE ITSELF SO IT HAS NEAT EDGES PRIOR TO TIE WRAPPING.
2. DURABLE ELBOW SUPPORT ACCEPTABLE MANUFACTURER AND MODEL: HART AND COOLEY - SMARTFLOW, THERMAFLEX - FLEXFLOW, TITUS - FLEXRIGHT, OR APPROVED EQUAL

3 RETURN/EXHAUST GRILLE WITH PLENUM CONNECTION DETAIL (W/ RADIUS FORMING ELBOW)

NO SCALE
M_RG.0.04

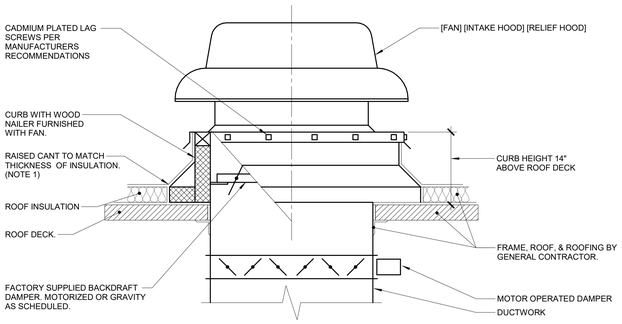

NOTES:

1. ALL ROOF FLASHING SHALL BE PER ROOFING MANUFACTURERS RECOMMENDATIONS.

4 ROOF FAN/HOOD CURB

NO SCALE
M_FAN.0.03

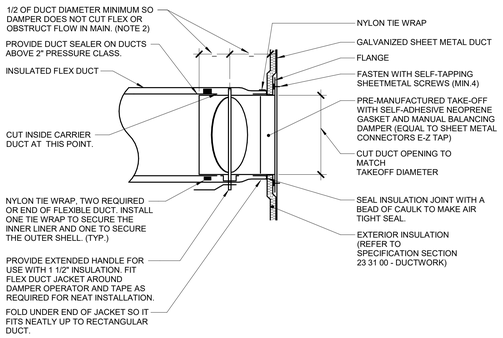

NOTES:

1. THIS DETAIL APPLIES ONLY TO TAPS OFF UNLINED DUCTS.
2. MANUFACTURED TAP/DAMPER COMBINATIONS WITH LESS THAN 1/2 DUCT DIAMETER SPACING BETWEEN THE MAIN DUCT AND THE DAMPER SHAFT ARE ACCEPTABLE ONLY IF THE DAMPER SHAFT IS INSTALLED PARALLEL TO THE AIR FLOW IN THE MAIN DUCT.

5 DUCT - FLEX CONICAL TO WRAPPED DUCT W/BALANCING DAMPER

NO SCALE
M_TAP.0.05

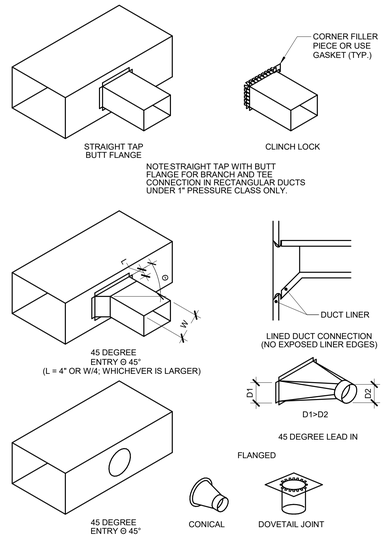

NOTES:

1. DO NOT USE CONNECTIONS WITH SCOOPS.
2. FIT ALL CONNECTIONS TO AVOID VISIBLE OPENINGS AND SECURE THEM SUITABLY FOR THE PRESSURE CLASS.
3. ADDITIONAL MECHANICAL FASTENERS ARE REQUIRED FOR 4"W.G. AND OVER.
4. SEE SPECIFICATIONS FOR ADDITIONAL INFORMATION.

6 DUCT - BRANCH CONNECTIONS

NO SCALE
M_TAP.0.01

IMEG
9000 E PIMA CENTER PARKWAY
SUITE 320
SCOTTSDALE, AZ 85258
P: 480.222.3771
www.imegcorp.com

IMEG CORP. RESERVES PROPRIETARY RIGHTS, INCLUDING COPYRIGHTS, TO THIS DRAWING AND THE DATA SHOWN THEREON. SAID DRAWING AND/OR DATA ARE THE EXCLUSIVE PROPERTY OF IMEG CORP. AND SHALL NOT BE USED OR REPRODUCED FOR ANY OTHER PROJECT WITHOUT THE EXPRESS WRITTEN APPROVAL AND PARTICIPATION OF IMEG CORP. ©2023 IMEG CORP.

0 1 2 3
REF. SCALE IN INCHES PROJECT #2300232700

STAMP

BENJAMIN W. YEUNG
NEW MEXICO
LICENSED PROFESSIONAL ENGINEER

11.03.2023

DYRON MURPHY ARCHITECTS, P.C.

4505 Montbel Place NE, Albuquerque, New Mexico 87107

SHIPROCK PINNACLE HOTEL & RESTAURANT

SHIPROCK, NEW MEXICO

100% CONSTRUCTION DOCUMENTS

ISSUED FOR CONSTRUCTION

NOVEMBER 3, 2023

PROJECT NUMBER	DRAWN BY	PROJ MGR
2022.10	IMEG	IMEG

MECHANICAL DETAILS

Sheet Title

Sheet Number

of

M500

11/2/2023 3:33:35 PM
Autodesk Docs://2300232700 - Shiprock Pinnacle Hotel & Restaurant/MEP/2_2300232700_Shiprock Pinnacle Hotel_C.rvt
DYRON MURPHY ARCHITECTS, P.C.

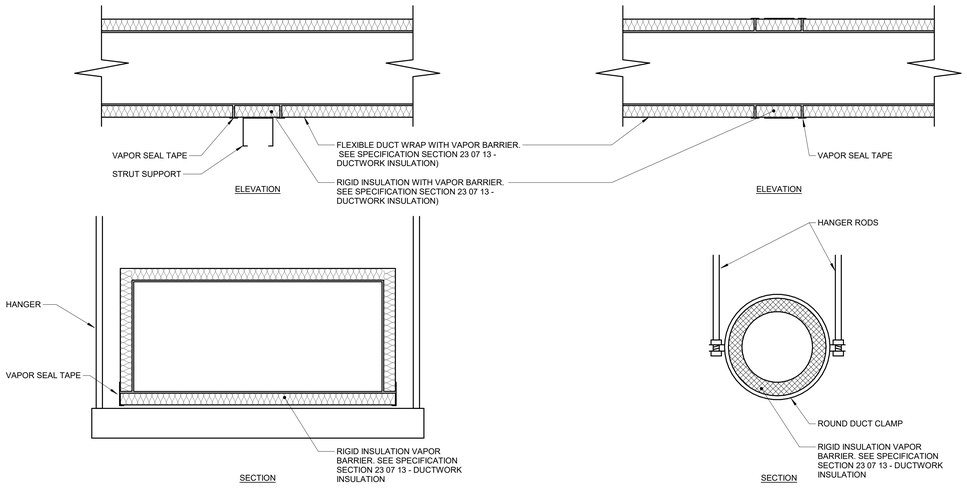

NOTES:

1. DETAIL FOR USE WHERE DUCTS REQUIRE TRAPEZE OR DOUBLE ROD HANGERS (36" DIA. OR EQUIVALENT)

1 DUCT - HANGERS WRAPPED

NO SCALE
M_SUP.0.16

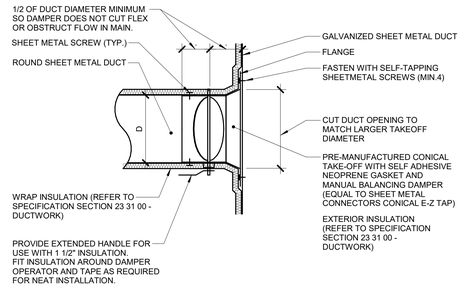

NOTES:

1. THIS DETAIL APPLIES ONLY TO TAPS OFF UNLINED DUCTS.
2. TAP DOES NOT NEED TO BE CONICAL IF THE TAP IS NOT LOCATED BETWEEN FANS AND TERMINAL AIR BOXES. DUCT IS NOT OVER 2" PRESSURE CLASS, AND ROUND DUCT IS NOT OVER 12" DIAMETER.
3. MANUFACTURED TAP/DAMPER COMBINATIONS WITH LESS THAN 1/2 DUCT DIAMETER SPACING BETWEEN THE MAIN DUCT AND THE DAMPER SHAFT ARE ACCEPTABLE ONLY IF THE DAMPER SHAFT IS INSTALLED PARALLEL TO THE AIR FLOW IN THE MAIN DUCT.

2 DUCT - HARD CONICAL TO WRAPPED DUCT CONNECTION

NO SCALE
M_TAP.0.07

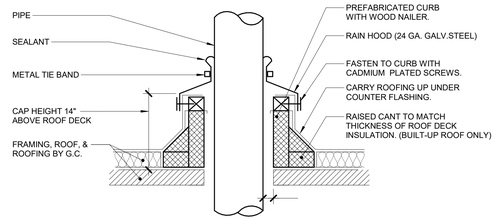

3 ROOF PENETRATION - BARE PIPE

NO SCALE
M_PEN.0.01

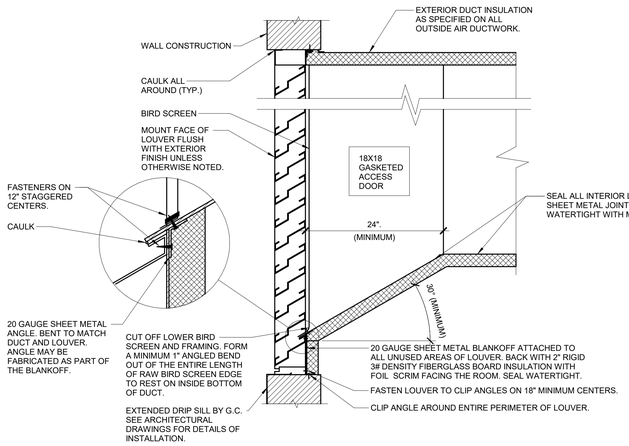

NOTES:

1. SEAL ALL JOING ON BOTTOM INTERIOR SURFACE OF DUCT WITHIN 6'-0" OF THE LOUVER WATER TIGHT.
2. MOUNT BOTTOM OF INTAKE LOUVERS AT LEAST 40" ABOVE GRADE OR ROOF ELEVATION TO MINIMIZE CHANCES OF SNOW DRIFTING INTO THE LOUVER.
3. CAULK SHEETMETAL SCREWS WHERE THE PENETRATE METAL.

4 LOUVER INSTALLATION

NO SCALE
M_L.0.01

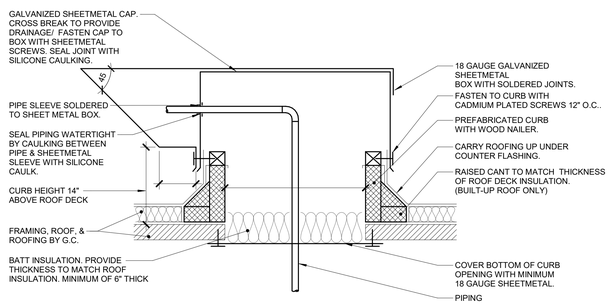

5 ROOF PENETRATION - INSULATED PIPE HOUSING - BUILT UP ROOF

12" = 1'-0"
M_PEN.0.09

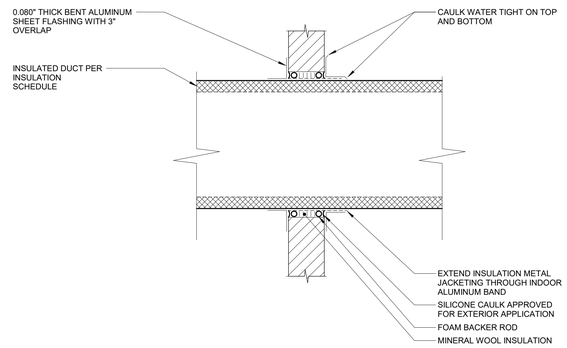

6 WALL PENETRATION - EXTERIOR - DUCT

NO SCALE
M_PEN.0.28

IMEG
9000 E PIMA CENTER PARKWAY
SUITE 320
SCOTTSDALE, AZ 85258
P: 480.222.3771
www.imegcorp.com

IMEG CORP. RESERVES PROPRIETARY RIGHTS, INCLUDING COPYRIGHTS, TO THIS DRAWING AND THE DATA SHOWN THEREON. SAID DRAWING AND/OR DATA ARE THE EXCLUSIVE PROPERTY OF IMEG CORP. AND SHALL NOT BE USED OR REPRODUCED FOR ANY OTHER PROJECT WITHOUT THE EXPRESS WRITTEN APPROVAL AND PARTICIPATION OF IMEG CORP. ©2023 IMEG CORP.

0 1 2 3
REF. SCALE IN INCHES
PROJECT #23002327.00

STAMP

11.03.2023

DYRON MURPHY ARCHITECTS, P.C.
4505 Montbel Place NE, Albuquerque, New Mexico 87107

SHIPROCK PINNACLE HOTEL & RESTAURANT

SHIPROCK, NEW MEXICO

100% CONSTRUCTION DOCUMENTS

ISSUED FOR CONSTRUCTION

NOVEMBER 3, 2023

PROJECT NUMBER	DRAWN BY	PROJ MGR
2022.10	IMEG	IMEG

MECHANICAL DETAILS

Sheet Title

Sheet Number

of

M501

11/2/2023 3:33:56 PM Autodesk Docs://23002327.00 - Shiprock Pinnacle Hotel & Restaurant/MEP/2_23002327.00_Shiprock Pinnacle Hotel_C.rvt
DYRON MURPHY ARCHITECTS, P.C.

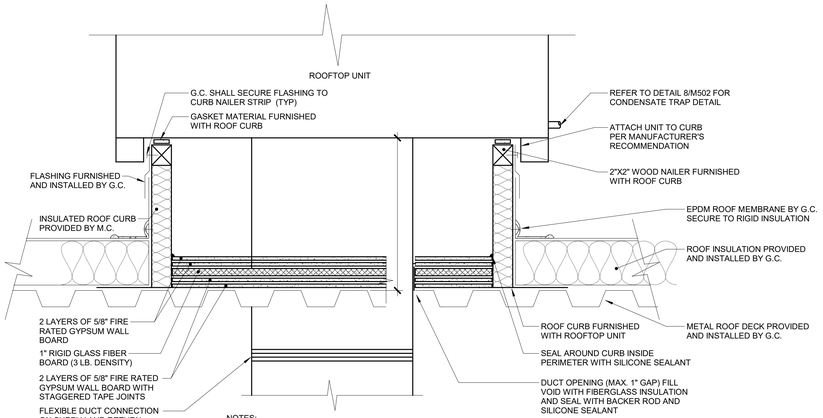

NOTES:

1. ALL ROOF FLASHING SHALL BE PER ROOF MANUFACTURER'S RECOMMENDATIONS.
2. ROOF CURB SHALL BE INSTALLED PER ROOF CURB MANUFACTURER'S RECOMMENDATIONS.
3. PROVIDE EXTENDED CURB AS REQUIRED TO MAINTAIN 12" CLEARANCE ABOVE INSULATION.

1 ROOF TOP UNIT CURB

NO SCALE
M_RTU.0.02

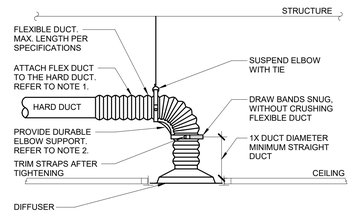

NOTES:

1. TO ATTACH FLEX DUCT TO THE HARD DUCT, TAPE THE INNER LINER TO THE HARD DUCT THEN ATTACH WITH TWO NYLON TIE WRAPS; ONE FOR THE INNER LINER AND ONE FOR THE OUTER SHELL. FOLD THE OUTER SHELL INSIDE ITSELF SO IT HAS NEAT EDGES PRIOR TO TIE WRAPPING.
2. DURABLE ELBOW SUPPORT ACCEPTABLE MANUFACTURER AND MODEL: HART AND COOLEY - SMARTFLOW, THERMAFLEX - FLEXFLOW, TITUS - FLEXRIGHT, OR APPROVED EQUAL.

2 DIFFUSER CONNECTION DETAIL (W/ RADIUS FORMING ELBOW)

NO SCALE
M_SD.0.04

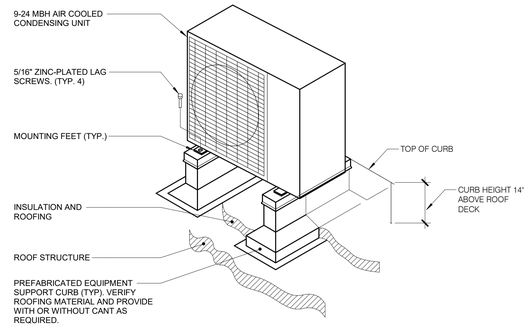

NOTES:

1. VERIFY DIAMETER OF ANCHOR BOLT REQUIRED TO FIT WITHIN MOUNTING FEET ANCHOR HOLES.

3 ROOF SUPPORT - EQUIPMENT RAIL

NO SCALE
M_SUP.0.04

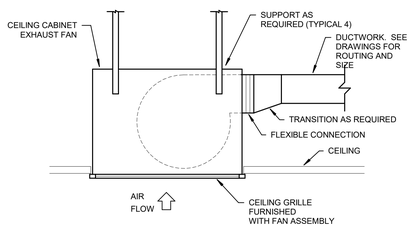

4 CEILING EXHAUST FAN

NO SCALE

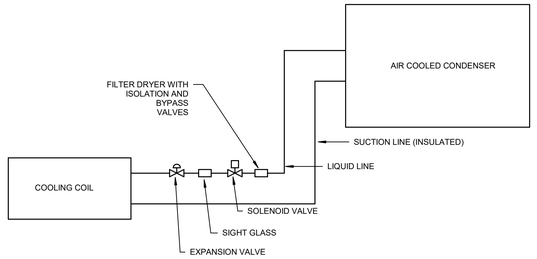

DETAIL NOTES:

1. ALL PIPING, TRAPS AND CONTROL EQUIPMENT SHALL BE SIZED AS REQUIRED BY MANUFACTURER.
2. CONTRACTOR TO VERIFY ALL NECESSARY COMPONENTS PRIOR TO INSTALLATION.

5 SPLIT SYSTEM DX PIPING

NO SCALE

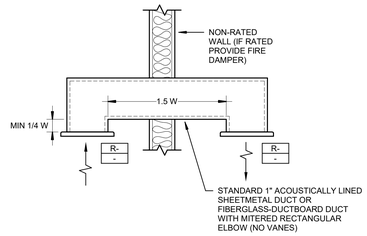

DETAIL NOTES:

1. SEE PLANS FOR SIZE AND LOCATION OF AIR TRANSFER DUCT.

6 TRANSFER DUCT

NO SCALE

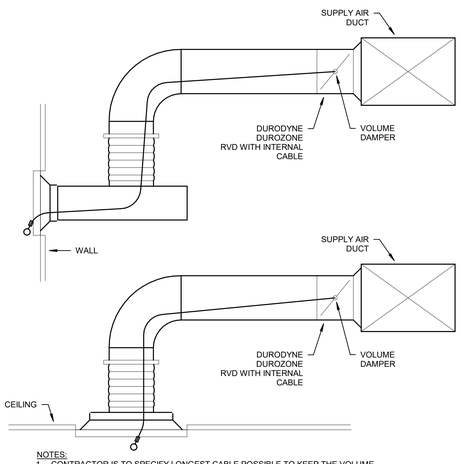

NOTES:

1. CONTRACTOR IS TO SPECIFY LONGEST CABLE POSSIBLE TO KEEP THE VOLUME DAMPER AS FAR AWAY AS POSSIBLE FROM AIR DEVICE. THE END OF THE VABLE IS TO BE LOCKED AND HIDDEN BEHIND THE AIR DEVICE AFTER THE AIR DEVICE HAS BEEN BALANCED.
2. INSTALL AS PER MANUFACTURER'S INSTRUCTIONS.

7 REMOTE VOLUME DAMPER (RVD)

NO SCALE

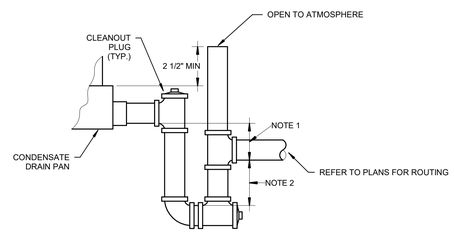

DETAIL NOTES:

1. BOTTOM OF DRAIN MUST BE 1" LOWER THAN PAN OUTLET.
2. THIS DIMENSION IN INCHES MUST BE GREATER THAN THE MAXIMUM FAN DISCHARGE STATIC PRESSURE IN INCHES WATER COLUMN PLUS 1".
3. ALL PIPES FULL SIZE OF UNIT CONDENSATE DRAIN OUTLET.
4. MANUALLY PRIME TRAP BEFORE START UP.

8 CONDENSATE DRAIN (BLOW THROUGH)

NO SCALE

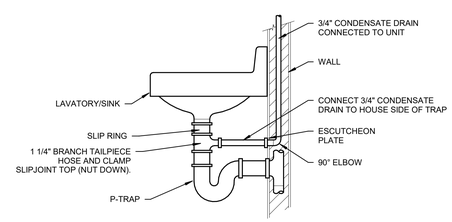

9 CONDENSATE DRAIN TO P-TRAP

NO SCALE

IMEG
9000 E PIMA CENTER PARKWAY
SUITE 320
SCOTTSDALE, AZ 85258
P: 480.222.3771
www.imegcorp.com

IMEG CORP. RESERVES PROPRIETARY RIGHTS, INCLUDING COPYRIGHTS, TO THIS DRAWING AND THE DATA SHOWN THEREON. SAID DRAWING AND/OR DATA ARE THE EXCLUSIVE PROPERTY OF IMEG CORP. AND SHALL NOT BE REPRODUCED OR REPRODUCED FOR ANY OTHER PROJECT WITHOUT THE EXPRESS WRITTEN APPROVAL AND PARTICIPATION OF IMEG CORP. ©2023 IMEG CORP.

0 1 2 3
REF. SCALE IN INCHES

PROJECT #23002327.00

STAMP

BENJAMIN W. YEUNG
NEW MEXICO
LICENSED PROFESSIONAL ENGINEER

11.03.2023

DYRON MURPHY ARCHITECTS, P.C.

4505 Montbel Place NE, Albuquerque, New Mexico 87107

SHIPROCK PINNACLE HOTEL & RESTAURANT

SHIPROCK, NEW MEXICO

100% CONSTRUCTION DOCUMENTS

ISSUED FOR CONSTRUCTION

NOVEMBER 3, 2023

PROJECT NUMBER	DRAWN BY	PROJ MGR
2022.10	IMEG	IMEG

MECHANICAL DETAILS

Sheet Title

Sheet Number

of

M502

11/2/2023 3:33:36 PM Autodesk Docs://23002327.00 - Shiprock Pinnacle Hotel & Restaurant/MEP/2_23002327.00_Shiprock Pinnacle Hotel_C.rvt
DYRON MURPHY ARCHITECTS, P.C.

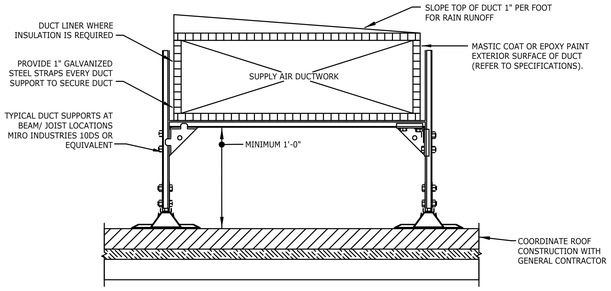

NOTES:
1. DUCT SUPPORT PROVIDES SUPPORT WITHOUT PENETRATING OR CAUSING DAMAGE TO THE ROOF MEMBRANE.
2. PROVIDE MIRO SUPPORT PAD OR OTHER TRAFFIC PAD FOR HEAVIER LOADS TO FURTHER PROTECT THE ROOF MEMBRANE.
3. MANUFACTURERS RECOMMENDED SPACING IS NOT TO EXCEED 8 FOOT CENTERS DEPENDING ON THE LOAD. DO NOT EXCEED LOAD WEIGHT AND MAKE CERTAIN EACH DUCT SUPPORT IS ADJUSTED IN HEIGHT TO EVEN LOAD AT ALL DUCT SUPPORTS.
4. MAXIMUM LOADING TO THE FINISHED ROOF SURFACE IS NOT TO EXCEED 2.0 PSI. DEFLECTION IN THE HORIZONTAL HEADER BAR IS NOT TO EXCEED THE SPAN LENGTH DIVIDED BY 360 OR 1/8".
5. INSTALL AS PER MANUFACTURERS RECOMMENDED INSTRUCTIONS.

1 DUCT SUPPORT ABOVE ROOF
NO SCALE

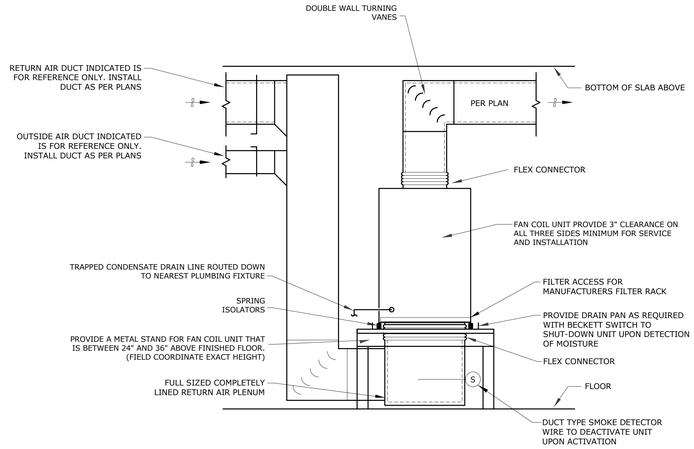

NOTE:
MECHANICAL ROOM/CLOSET INDICATED IS FOR REFERENCE ONLY. REFER TO PLANS FOR THE VARYING CONFIGURATIONS.

2 VERTICAL FAN COIL UNIT
NO SCALE

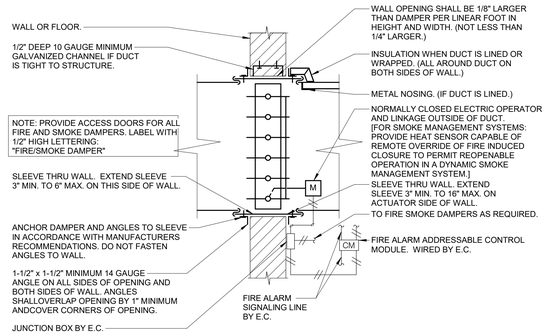

NOTES:
1. CONNECTION OF DAMPER TO SLEEVE SHALL BE AS SHOWN IN FIGURE 1 OF SMACNA "FIRE DAMPER AND HEAT STOP GUIDE FOR AIR HANDLING SYSTEMS", SECOND EDITION.
2. DAMPER CLOSES BY SPRING ACTION IN EVENT OF HIGH TEMPERATURE.
3. FLOOR MOUNTED DAMPER SIMILAR WITH ACTUATOR ON SIDE WITH ACCESS DOOR.
4. WHERE DUCT SMOKE DETECTORS CANNOT BE ACCESSED BY THE DAMPER ACCESS DOOR THE ELECTRICAL CONTRACTOR SHALL FURNISH A DUCT ACCESS DOOR FOR THE DETECTOR. THE MECHANICAL CONTRACTOR SHALL INSTALL THE DOOR IN THE DUCT.
5. SEE FIRE/SMOKE DAMPER WIRING SCHEMATIC DETAIL ON ELECTRICAL DRAWINGS FOR WIRING DETAILS. REFER TO ELECTRICAL DRAWINGS FOR FSD/CM LOCATIONS.

3 FIRE/SMOKE DAMPER - ELECTRIC ACTUATION
NO SCALE
M_CFSD.0.04

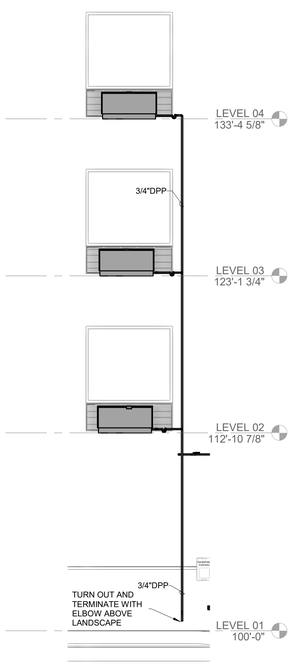

4 CONDENSATE STACK LEVELS 2-4
NO SCALE

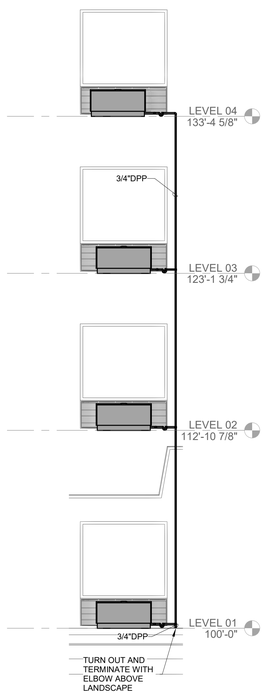

5 CONDESNATE STACK ALL LEVELS
NO SCALE

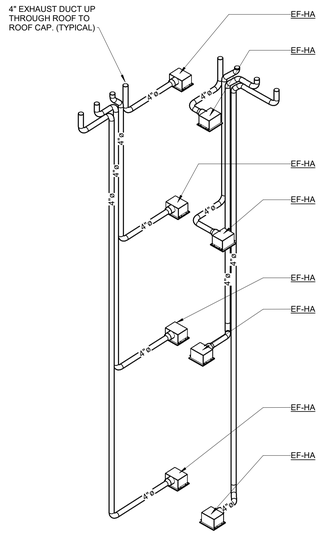

6 EXHAUST TYPICAL 1 ISOMETRIC
NO SCALE

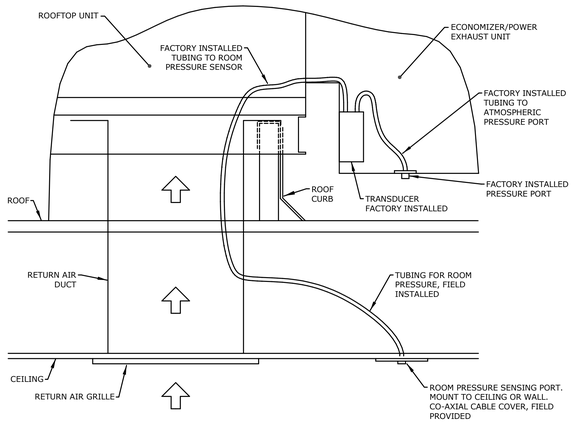

NOTES:
1. IF TUBING NOT PRE-INSTALLED, APPOXIMATELY 25 FT. OF TUBING IS SUPPLIED WITH POWER EXHAUST THAT CAN BE FED DOWN THE RETURN AIR DUCT, OR WITH THERMOSTAT WIRE, TO BUILDING ENVELOPE.
2. DO NOT TERMINATE TUBING IN DUCTWORK. THE NEGATIVE PRESSURE OF THE RETURN AIR IS NOT REPRESENTATIVE OF BUILDING PRESSURE.
3. ROOM PRESSURE SENSOR SHALL NOT BE INSTALLED IN CLOSE PROXIMITY TO SUPPLY AIR DIFFUSERS/GRILLES.

7 ECONOMIZER-POWER EXHAUST PRESSURE TUBING
NO SCALE

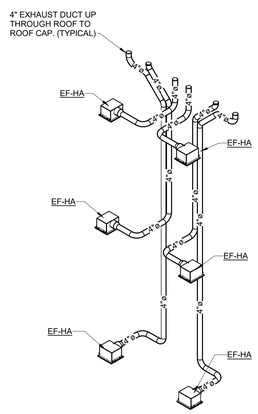

8 EXHAUST TYPICAL 2 ISOMETRIC
NO SCALE

IMEG
9000 E PIMA CENTER PARKWAY
SUITE 320
SCOTTSDALE, AZ 85258
P: 480.222.3771
www.imegcorp.com
IMEG CORP. RESERVES PROPRIETARY RIGHTS, INCLUDING COPYRIGHTS, TO THIS DRAWING AND THE DATA SHOWN THEREON. SAID DRAWING AND/OR DATA ARE THE EXCLUSIVE PROPERTY OF IMEG CORP. AND SHALL NOT BE USED OR REPRODUCED FOR ANY OTHER PROJECT WITHOUT THE EXPRESS WRITTEN APPROVAL AND PARTICIPATION OF IMEG CORP. ©2023 IMEG CORP.
0 1 2 3
REF. SCALE IN INCHES
PROJECT #23002327.00

STAMP
BENJAMIN W. YEUNG
NEW MEXICO
LICENSED PROFESSIONAL ENGINEER
11.03.2023

DYRON MURPHY ARCHITECTS, P.C.
4505 Montbel Place NE, Albuquerque, New Mexico 87107

SHIPROCK PINNACLE HOTEL & RESTAURANT
SHIPROCK, NEW MEXICO
100% CONSTRUCTION DOCUMENTS
ISSUED FOR CONSTRUCTION
NOVEMBER 3, 2023

PROJECT NUMBER	DRAWN BY	PROJ MGR
2022.10	IMEG	IMEG

MECHANICAL DETAILS

Sheet Title

Sheet Number of

M503

11/2/2023 3:33:51 PM Autodesk Docs://23002327.00 - Shiprock Pinnacle Hotel & Restaurant/M/P/2_23002327.00_Shiprock Pinnacle Hotel_C.rvt
DYRON MURPHY ARCHITECTS, P.C.

EXHAUST FAN INFORMATION – JOB#6067318

FAN UNIT NO	TAG	QTY	FAN UNIT MODEL #	MANUFACTURER	CFM	ESP	RPM	MOTOR ENCL	HP	BHP	PHASE	VOLT	FLA	DISCHARGE VELOCITY	WEIGHT (LBS)	SONES
1	KEF-1	1	DU180HFA	CAPTIVEAIRE	2550	2.200	1493	DDP,PREMIUM	3.000	1.9960	3	208	9.5	589 FPM	189	23.6
2	KEF-2	1	DU240HFA	CAPTIVEAIRE	4500	2.400	1142	DDP,PREMIUM	5.000	3.7200	3	208	15.8	1023 FPM	313	29.5
3	KEF-3	1	DU85HFA	CAPTIVEAIRE	1050	1.000	1251	TEAO-ECM	0.750	0.3210	1	115	8.9	332 FPM	88	9.7

CONDENSER DETAILS

FAN UNIT NO	TAG	FAN UNIT MODEL #	CONDENSER NO	TONNAGE	VOLTAGE	PHASE	FREQUENCY	MCA	RLA	MAX FUSE SIZE	MIN WIRE SIZE	SEER
4	MAU-1	A3-D.500-24D-MPU	1	5	208-230	3 PHASE	60 HZ	21.4 AMPS	17.4 AMPS	30 AMPS	10 AWG	14
			2	5	208-230	3 PHASE	60 HZ	21.4 AMPS	17.4 AMPS	30 AMPS	10 AWG	14

MUA FAN INFORMATION – JOB#6067318

FAN UNIT NO	TAG	QTY	FAN UNIT MODEL #	BLOWER	HOUSING	MIN CFM	DESIGN CFM	ESP	RPM	MOTOR ENCL	HP	BHP	PHASE	VOLT	FLA	MCA	MOCP	WEIGHT (LBS)	SONES
4	MAU-1	1	A3-D.500-24D-MPU	24MF-3-MOD	A3-D.500	3600	5630	0.750	1454	DDP,PREMIUM	7.500	4.7280	3	208	21.1	62.4A	80A	1878	13.8

COILS – JOB#6067318

FAN UNIT NO	TAG	COIL TYPE	DESIGN CFM	COOLING										HEATING								
				ENTERING DB TEMP	ENTERING WB TEMP	LEAVING DB TEMP	LEAVING WB TEMP	ENTERING FLUID TEMP	LEAVING FLUID TEMP	FLUID FLOW RATE	PERCENT GLYCOL	TOTAL CAPACITY	SENSIBLE CAPACITY	LATENT CAPACITY	ENTERING DB TEMP	LEAVING DB TEMP	ENTERING FLUID TEMP	LEAVING FLUID TEMP	FLUID FLOW RATE	PERCENT GLYCOL	STEAM PRESSURE	TOTAL CAPACITY	SENSIBLE CAPACITY
4	MAU-1	DX	5630	92.0°F	60.0°F	73.7°F	53.7°F	---	---	---	---	88.5 MBH	88.5 MBH	0.0 MBH	---	---	---	---	---	---	---	---	---

GAS FIRED MAKE-UP AIR UNIT(S)

FAN UNIT NO	TAG	INPUT BTUs	OUTPUT BTUs	TEMP RISE	REQUIRED INPUT GAS PRESSURE	GAS TYPE	BURNER EFFICIENCY(%)
4	MAU-1	349167	321234	65°F	7 IN. W.C. - 14 IN. W.C.	NATURAL	92

FAN OPTIONS

FAN UNIT NO	TAG	QTY	DESCRIPTION
1	KEF-1	1	GREASE BOX
		1	FAN BASE CERAMIC SEAL - INSTALLED AT PLANT - FOR GREASE DUCTS
		1	2 YEAR PARTS WARRANTY
2	KEF-2	1	GREASE BOX
		1	FAN BASE CERAMIC SEAL - INSTALLED AT PLANT - FOR GREASE DUCTS
		1	2 YEAR PARTS WARRANTY
3	KEF-3	1	ECM WIRING PACKAGE - EXHAUST - MANUAL OR 0-10VDC REFERENCE SPEED CONTROL -MSC-(TELCO), CCW ROTATION
		1	I 19-BDD DAMPER
		1	SCR-15 BIRD SCREEN
		1	2 YEAR PARTS WARRANTY
4	MAU-1	1	INLET PRESSURE GAUGE, 0-35"
		1	MANIFOLD PRESSURE GAUGE, -5 TO 15" WC
		1	BUTTERFLY MOD VALVE OPTION FOR MOD SIZE 3 (1" MOD VALVE)
		1	SHIP LOOSE GAS STRAINER 1"
		1	MOTORIZED BACKDRAFT DAMPER FOR A3-D HOUSING - MEETS AMCA CLASS 1A RATING
		1	10 TON 2 CIRCUIT (5/5) MODULAR PACKAGED COOLING OPTION FOR SIZE 3 DF/EH MUA (3,600 TO 6,000 CFM), 208V/230V, 3 PHASE. COOLING THERMOSTAT OR PROGRAMMABLE STAT REQUIRED FOR PROPER OPERATION
		1	DOWNTURN PLENUM FOR SIZE 3 DX COIL MODULE
		1	SINGLE POINT MPU CONNECTION - 2 CONDENSERS
		1	UNIT MOUNTED VFD FOR USE WITH ECPM03
		1	2 YEAR PARTS WARRANTY

FAN ACCESSORIES

FAN UNIT NO	TAG	EXHAUST			SUPPLY			
		GREASE CUP	GRAVITY DAMPER	WALL MOUNT	SIDE DISCHARGE	GRAVITY DAMPER	MOTORIZED DAMPER	WALL MOUNT
1	KEF-1	YES						
2	KEF-2	YES						
3	KEF-3		YES					
4	MAU-1						YES	

CURB ASSEMBLIES

NO	ON FAN	TAG	WEIGHT	ITEM	SIZE
1	# 1	KEF-1	41 LBS	CURB	26.500"W X 26.500"L X 20.000"H VENTED HINGED.
2	# 2	KEF-2	48 LBS	CURB	31.500"W X 31.500"L X 20.000"H VENTED HINGED.
3	# 3	KEF-3	36 LBS	CURB	23.000"W X 23.000"L X 20.000"H VENTED HINGED.
4	# 4	MAU-1	114 LBS	CURB	35.000"W X 84.000"L X 20.000"H INSULATED.
	# 4			RAIL	6.000"W X 35.000"L X 20.000"H.

FAN #1 DU180HFA - EXHAUST FAN (KEF-1)

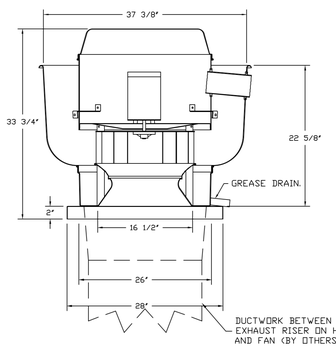

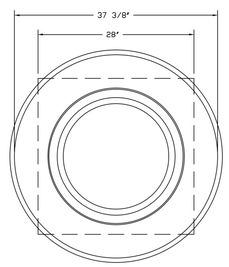

TOP VIEW

FEATURES:

- DIRECT DRIVE CONSTRUCTION (NO BELTS/PULLEYS).
- ROOF MOUNTED FANS.
- RESTAURANT MODEL.
- UL705 AND UL762 AND ULC-S645
- VARIABLE SPEED CONTROL.
- INTERNAL WIRING.
- THERMAL OVERLOAD PROTECTION (SINGLE PHASE).
- HIGH HEAT OPERATION 300°F (149°C).
- GREASE CLASSIFICATION TESTING.
- NEMA 3R SAFETY DISCONNECT SWITCH.

NORMAL TEMPERATURE TEST
EXHAUST FAN MUST OPERATE CONTINUOUSLY WHILE EXHAUSTING AIR AT 300°F (149°C) UNTIL ALL FAN PARTS HAVE REACHED THERMAL EQUILIBRIUM, AND WITHOUT ANY DETERIORATING EFFECTS TO THE FAN WHICH WOULD CAUSE UNSAFE OPERATION.

ABNORMAL FLARE-UP TEST
EXHAUST FAN MUST OPERATE CONTINUOUSLY WHILE EXHAUSTING BURNING GREASE VAPORS AT 600°F (316°C) FOR A PERIOD OF 15 MINUTES WITHOUT THE FAN BECOMING DAMAGED TO ANY EXTENT THAT COULD CAUSE AN UNSAFE CONDITION.

OPTIONS

- GREASE BOX.
- FAN BASE CERAMIC SEAL - INSTALLED AT PLANT - FOR GREASE DUCTS.
- 2 YEAR PARTS WARRANTY.

VERIFY PITCH CURB
_____ : _____
Curb Pitch Required in order to manufacture the curb to specification.

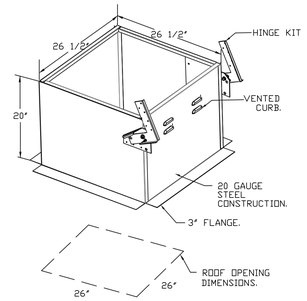

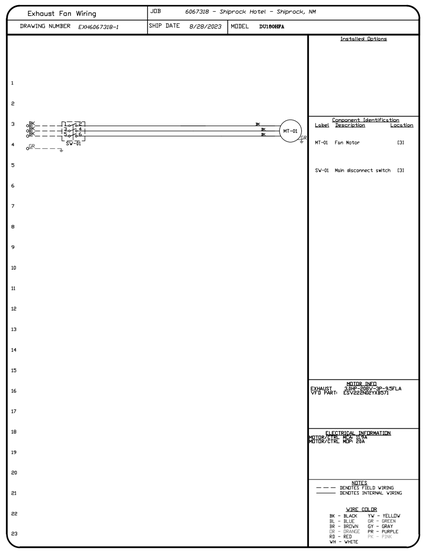

REVISIONS

DESCRIPTION	DATE

CAPTIVEAIRE
Arizona Office
1717 E. Bell Road, SUITE 12, Phoenix, AZ. 85022 PHONE: (480) 926 - 6810 FAX: 8777192227 EMAIL: regi53@captiveaire.com
www.captiveaire.com

Shiprock Hotel - Shiprock, NM
SHIPROCK, NM, 87420

DATE: 8/28/2023
DWG.#: 6067318
DRAWN BY: tim.mathis
SCALE: 3/4" = 1'-0"
MASTER DRAWING
SHEET NO. 5

IMEG
5000 E PIMA CENTER PARKWAY
SUITE 320
SCOTTSDALE, AZ 85258
P: 480.222.3771
www.imegcorp.com

IMEG CORP. RESERVES PROPRIETARY RIGHTS, INCLUDING COPYRIGHTS, TO THIS DRAWING AND THE DATA SHOWN THEREON. SAID DRAWING AND/OR DATA ARE THE EXCLUSIVE PROPERTY OF IMEG CORP. AND SHALL NOT BE USED OR REPRODUCED FOR ANY OTHER PROJECT WITHOUT THE EXPRESS WRITTEN APPROVAL AND PARTICIPATION OF IMEG CORP. ©2023 IMEG CORP.

0 1 2 3
REF. SCALE IN INCHES PROJECT #23002327.00

STAMP

BENJAMIN W. YEUNG
NEW MEXICO
23802
LICENSED PROFESSIONAL ENGINEER
11.03.2023

DYRON MURPHY ARCHITECTS, P.C.
4505 Montbel Place NE, Albuquerque, New Mexico 87107

SHIPROCK PINNACLE HOTEL & RESTAURANT

SHIPROCK, NEW MEXICO

100% CONSTRUCTION DOCUMENTS

ISSUED FOR CONSTRUCTION

NOVEMBER 3, 2023

PROJECT NUMBER	DRAWN BY	PROJ MGR
2022.10	IMEG	IMEG

MECHANICAL CAPTIVEAIRE DRAWINGS

Sheet Title

Sheet Number M504 of

11/2/2023 3:33:52 PM Autodesk Docs://23002327.00 - Shiprock Pinnacle Hotel & Restaurant/M/PZ_23002327.00_Shiprock Pinnacle Hotel_C.rvt
DYRON MURPHY ARCHITECTS, P.C.

FAN #2 DU240HFA - EXHAUST FAN (KEF-2)

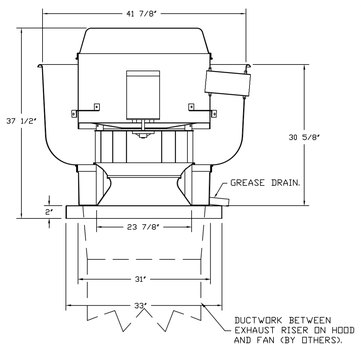

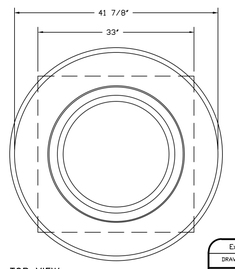

TOP VIEW

FEATURES:

- DIRECT DRIVE CONSTRUCTION (NO BELTS/PULLEYS).
- ROOF MOUNTED FANS.
- RESTAURANT MODEL.
- UL705 AND UL762 AND ULC-S645
- VARIABLE SPEED CONTROL.
- INTERNAL WIRING.
- THERMAL OVERLOAD PROTECTION (SINGLE PHASE).
- HIGH HEAT OPERATION 300°F (149°C).
- GREASE CLASSIFICATION TESTING.
- NEMA 3R SAFETY DISCONNECT SWITCH.

NORMAL TEMPERATURE TEST
EXHAUST FAN MUST OPERATE CONTINUOUSLY WHILE EXHAUSTING AIR AT 300°F (149°C) UNTIL ALL FAN PARTS HAVE REACHED THERMAL EQUILIBRIUM, AND WITHOUT ANY DETERIORATING EFFECTS TO THE FAN WHICH WOULD CAUSE UNSAFE OPERATION.

ABNORMAL FLARE-UP TEST
EXHAUST FAN MUST OPERATE CONTINUOUSLY WHILE EXHAUSTING BURNING GREASE VAPORS AT 600°F (316°C) FOR A PERIOD OF 15 MINUTES WITHOUT THE FAN BECOMING DAMAGED TO ANY EXTENT THAT COULD CAUSE AN UNSAFE CONDITION.

OPTIONS

- GREASE BOX.
- FAN BASE CERAMIC SEAL - INSTALLED AT PLANT - FOR GREASE DUCTS.
- 2 YEAR PARTS WARRANTY.

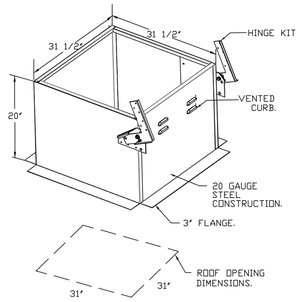

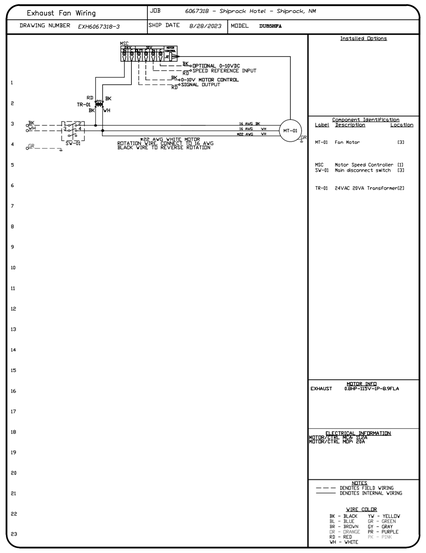

FAN #3 DU8SHFA - EXHAUST FAN (KEF-3)

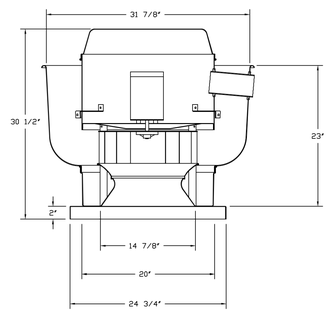

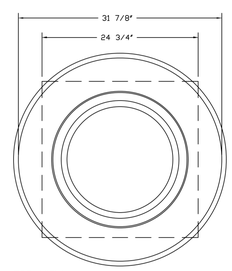

TOP VIEW

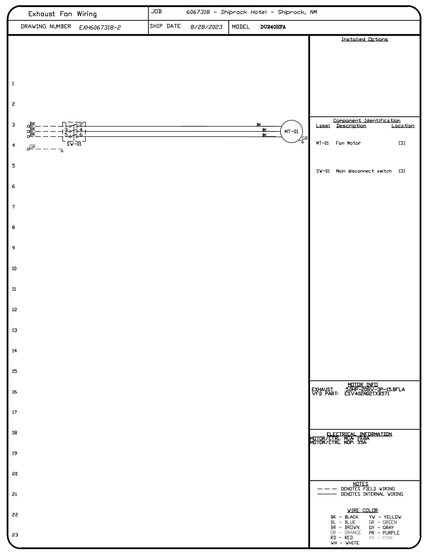

FEATURES:

- DIRECT DRIVE CONSTRUCTION (NO BELTS/PULLEYS).
- ROOF MOUNTED FANS.
- UL705.
- VARIABLE SPEED CONTROL.
- INTERNAL WIRING.
- THERMAL OVERLOAD PROTECTION (SINGLE PHASE).
- NEMA 3R SAFETY DISCONNECT SWITCH.

OPTIONS

- ECM WIRING PACKAGE - EXHAUST - MANUAL OR 0-10VDC REFERENCE SPEED CONTROL -MSC- (TELCO), CCW ROTATION.
- 1 19-BOD DAMPER.
- SCR-15 BIRD SCREEN.
- 2 YEAR PARTS WARRANTY.

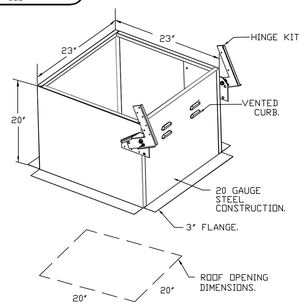

BACKDRAFT DAMPER INSTALLATION

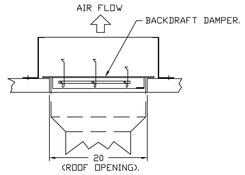

REVISIONS

DESCRIPTION	DATE:

CAPTIVEAIRE
Arizona Office
www.captiveaire.com
1717 E. Bell Road, SUITE 12, Phoenix, AZ. 85022 PHONE: (480) 926 - 6810 FAX: 8777192227 EMAIL: reg93@captiveaire.com

Shiprock Hotel - Shiprock, NM
SHIPROCK, NM, 87420

DATE: 8/28/2023

DWG.#: 6067318

DRAWN BY: tim.mathis

SCALE: 3/4" = 1'-0"

MASTER DRAWING

SHEET NO. 6

IMEG
9000 E PIMA CENTER PARKWAY
SUITE 320
SCOTTSDALE, AZ 85258
P: 480.222.3771
www.imegcorp.com

IMEG CORP. RESERVES PROPRIETARY RIGHTS, INCLUDING COPYRIGHTS, TO THIS DRAWING AND THE DATA SHOWN THEREON. SAID DRAWING AND/OR DATA ARE THE EXCLUSIVE PROPERTY OF IMEG CORP. AND SHALL NOT BE USED OR REPRODUCED FOR ANY OTHER PROJECT WITHOUT THE EXPRESS WRITTEN APPROVAL AND PARTICIPATION OF IMEG CORP. ©2023 IMEG CORP.

0 1 2 3
REF. SCALE IN INCHES PROJECT #23002327.00

STAMP

BENJAMIN W. YEUNG
NEW MEXICO
LICENSED PROFESSIONAL ENGINEER
11.03.2023

DYRON MURPHY ARCHITECTS, P.C.

4505 Montbel Place NE, Albuquerque, New Mexico 87107

SHIPROCK PINNACLE HOTEL & RESTAURANT

SHIPROCK, NEW MEXICO

100% CONSTRUCTION DOCUMENTS

ISSUED FOR CONSTRUCTION

NOVEMBER 3, 2023

PROJECT NUMBER	DRAWN BY	PROJ MGR
2022.10	IMEG	IMEG

MECHANICAL CAPTIVEAIRE DRAWINGS

Sheet Title

Sheet Number of

M505

11/2/2023 3:33:33 PM Autodesk Docs://23002327.00 - Shiprock Pinnacle Hotel & Restaurant/MEP/2_23002327.00_Shiprock Pinnacle Hotel_C.rvt
DYRON MURPHY ARCHITECTS, P.C.

FAN #4 A3-D500-243-MPU - HEATER (MAU-1)
1. DIRECT GAS FIRED HEATED MAKE UP AIR UNIT WITH 24" MIXED FLOW DIRECT DRIVE FAN AND 12" BURNER.
2. INTAKE HOOD WITH EZ FILTERS.
3. DISCHARGE DIRECTION: DOWN - RIGHT -> LEFT.
4. GAS PRESSURE GAUGE, 0-30" 2.5" DIAMETER, 1/4" THREAD SIZE.
5. GAS PRESSURE GAUGE, -5 TO +5 INCHES W.C. 2.5" DIAMETER, 1/4" THREAD SIZE.
6. BUTTERFLY MOD. VALVE OPTION FOR MOD SIZE 3-12" MOD VALVES.
7. 1" CONNECTION, 1/2" CONNECTION, 1/4" CONNECTION, 1/4" CONNECTION, 1" CONNECTION.
8. MOTORIZED BACK DRAFT DAMPER 30" X 30" FOR SIZE 3 STANDARD & MODULAR HEATER UNITS W/EXTENDED SHAFT, STANDARD GALVANIZED CONSTRUCTION, 3/4" REAR FLANGE, LOW LEAKAGE. NF&P-G ACTUATOR INCLUDES
9. 10 TON, DUAL CIRCUIT (5/5) MODULAR PACKAGED COOLING OPTION FOR SIZE 3 DF/GH MODULAR PACKAGED UNIT. INCLUDES CONDENSER, DX COIL, FILTER/DRYER KIT, THERMAL EXPANSION VALVE, R410A REFRIGERANT, AND REFRIGERANT PIPING. (3.681 TO 4.681 FOOT CONDENSER PIPING DEPENDING ON UNIT SIZE). CONDENSER FAN MOTORS ARE 1 PHASE, 208-230V. CONDENSATE DRAIN AND SLEEK WILL MOVE TO THE OPPOSITE SIDE. ANY OTHER CHANGE WILL REQUIRE CLI. CONDENSERS REQUIRE SEPARATE 208V, 3 PHASE POWER SUPPLY UNLESS ORDERED WITH SINGLE POINT CONNECTION. COIL = 3E336GEM.
10. DOWNTURN PLENUM FOR SIZE 3 COOLING COIL MODULE - REQUIRED FOR DOWN DISCHARGE COOLING COIL APPLICATIONS.
11. UNIT MOUNTED 115V GFCI RECEPTACLE WITH COVERS.
12. UNIT MOUNTED 115V FOR USE WITH COVRACS.
13. HINGED DOUBLE WALL INSULATED DOOR ASSEMBLY (BURNER/BLOWER/MPU SECTIONS).
14. 2 YEAR PARTS WARRANTY

MAUTO: SUPPLY DUCT MUST BE INSTALLED TO MEET SMACNA STANDARDS. A MINIMUM STRAIGHT DUCT LENGTH MUST BE MAINTAINED DOWNSTREAM OF UNIT DISCHARGE AS OUTLINED IN AMCA PUBLICATION 200. WHEN USING RECTANGULAR DUCTWORK, ELBOWS MUST BE RADIUS THROAT, RADIUS BACK WITH TURNING VANES. FLEXIBLE DUCTWORK AND SQUARE THROAT/SQUARE BACK ELBOWS SHOULD NOT BE USED. ANY TRANSITION AND/OR TURNS IN THE DUCTWORK WILL CAUSE SYSTEM EFFECT. SYSTEM EFFECT WILL REDUCE PERFORMANCE OF THE EQUIPMENT. SYSTEM EFFECT CAN BE MINIMIZED IF THE DUCTWORK IS INSTALLED AS STATED IN AMCA. FAILURE TO PROPERLY SIZE DUCTWORK MAY CAUSE SYSTEM EFFECTS AND REDUCE PERFORMANCE OF THE EQUIPMENT.
SUGGESTED STRAIGHT DUCT SIZE IS 24" x 24".

SUPPLY SIDE HEATER INFORMATION:
WINTER TEMPERATURE = 19°F. TEMP RISE = 65°F.
BTUH CALCULATED OFF ACTUAL AIR DENSITY.
OUTPUT BTUH AT ALTITUDE OF 60 FT. = 389502
INPUT BTUH AT ALTITUDE OF 5236 FT. = 303234.
OUTPUT BTUH AT ALTITUDE OF 5236 FT. = 303234.
INPUT BTUH AT ALTITUDE OF 5236 FT. = 349967.

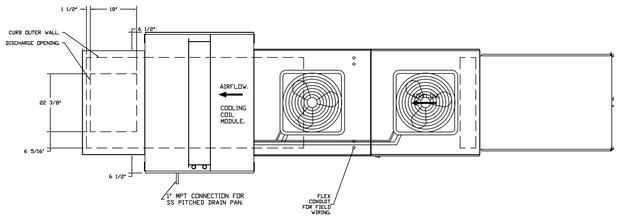

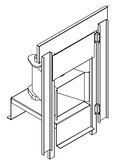

DIRECT FIRED (DF) PROFILE PLATE ASSEMBLY

DIRECT FIRED PROFILE PLATE SPECIFICATIONS:
DESCRIPTION
DIRECT FIRED BURNERS SHALL HAVE PATENTED (US PATENT NO: US6629952B0). SELF-ADJUSTING PROFILE PLATES DESIGNED TO ENSURE PROPER AIR VELOCITY AND PRESSURE DROP ACROSS THE BURNER PROFILE PLATES SHALL ALLOW BURNER TO ACHIEVE CLEAN COMBUSTION BY LIMITING BY-PRODUCT LEVELS TO A MINIMUM. THE PROFILE PLATE ASSEMBLY SHALL BE INCLUDED IN THE DF UNITS ETL LISTING AND COMPLY WITH COMBINED SAFETY STANDARDS ANSI Z83.4 AND CSA 3.7 (NON-RECIRCULATING DF HEATERS) AND ANSI Z83.18 (RECIRCULATING DF HEATERS).
UNITS SHALL BE CONFIGURED WITH THE BLOWER MOUNTED DOWNSTREAM OF THE BURNER. THIS ARRANGEMENT WILL ENSURE A CONSISTENT AIRFLOW, REGARDLESS OF INLET AIR TEMPERATURE.

APPLICATION
SPRING-LOADED BURNER PROFILE PLATES ARE ENGINEERED TO AUTOMATICALLY REACT TO THE MOMENTUM OF AIR UPSTREAM, WITHOUT THE NEED FOR ANY MOTORS OR ACTUATORS TO MECHANICALLY ADJUST THEM. WITH THIS FEATURE, ALL DF UNITS ARE DESIGNED FOR DEMAND CONTROL VENTILATION (DCV) REQUIREMENTS.

CERTIFICATIONS
THE PROFILE PLATE ASSEMBLIES SHALL BE INCLUDED IN THE DF UNITS ETL LISTING AND COMPLY WITH COMBINED SAFETY STANDARDS ANSI Z83.4 AND CSA 3.7 (NON-RECIRCULATING DF HEATERS) AND ANSI Z83.18 (RECIRCULATING DF HEATERS).

GENERAL CONSTRUCTION
-PROFILE PLATES SHALL BE FORMED FROM (20) GALVANEIZED STEEL.
-PROFILE PLATES SHALL VARY IN SIZE PER UNIT.
-PROFILE PLATES SHALL BE MOUNTED ALONG THE SAME PLANE AS THE DISCHARGE OF THE BURNER.
-DESIGN SHALL INCORPORATE PROPERLY TORQUED, PERMANENTLY MOUNTED SPRING HINGES.
-SPRING HINGES SHALL BE MADE FROM PLATED STEEL.

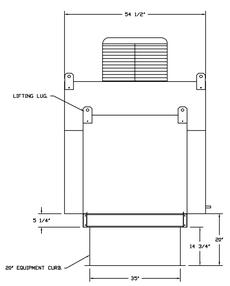

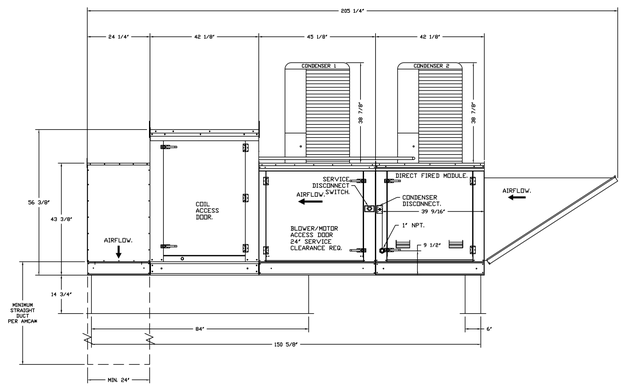

TYPICAL DRAIN TRAP INSTALL.

RECOMMENDED COOLING COIL DRAIN TRAP CONFIGURATION.

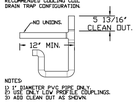

NOTES:
1) 1" DIAMETER PVC PIPE ONLY.
2) USE ONLY LOW PROFILE COUPLINGS.
3) ADD CLEAN OUT AS SHOWN.

OPTIONS:
- FULL BOTTOM CORNERS.

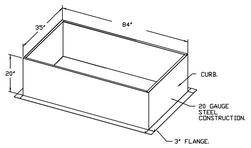

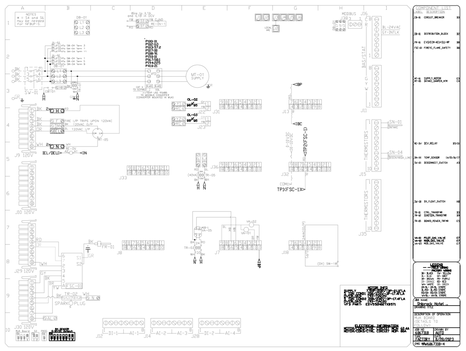

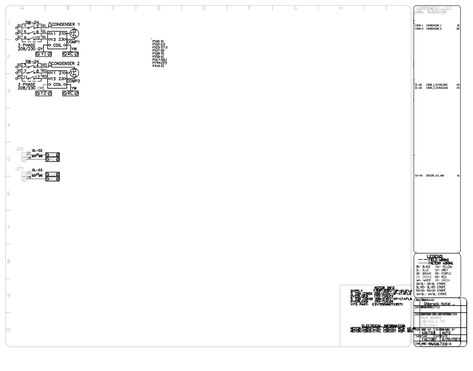

REVISIONS

DESCRIPTION	DATE:
△	
△	
△	
△	

CAPTIVEAIRE
Arizona Office
www.captiveaire.com
1717 E. Bell Road, SUITE 12, Phoenix, AZ, 85022 PHONE: (480) 926 - 6810 FAX: 8777192227 EMAIL: rsg93@captiveaire.com

Shiprock Hotel - Shiprock, NM
SHIPROCK, NM, 87420

DATE: 8/28/2023
DWG.#: 6067318
DRAWN BY: tim.mathis
SCALE: 1/2" = 1'-0"
MASTER DRAWING
SHEET NO. 7

IMEG
9000 E PIMA CENTER PARKWAY
SUITE 320
SCOTTSDALE, AZ 85258
P: 480.222.3771
www.imegcorp.com

IMEG CORP. RESERVES PROPRIETARY RIGHTS, INCLUDING COPYRIGHTS, TO THIS DRAWING AND THE DATA SHOWN THEREON. SAID DRAWING AND/OR DATA ARE THE EXCLUSIVE PROPERTY OF IMEG CORP. AND SHALL NOT BE USED OR REPRODUCED FOR ANY OTHER PROJECT WITHOUT THE EXPRESS WRITTEN APPROVAL AND PARTICIPATION OF IMEG CORP. ©2023 IMEG CORP.

0 1 2 3
REF. SCALE IN INCHES
PROJECT #23002327.00

STAMP

11.03.2023

DYRON MURPHY ARCHITECTS, P.C.
4505 Montbel Place NE, Albuquerque, New Mexico 87107

SHIPROCK PINNACLE HOTEL & RESTAURANT

SHIPROCK, NEW MEXICO

100% CONSTRUCTION DOCUMENTS

ISSUED FOR CONSTRUCTION

NOVEMBER 3, 2023

PROJECT NUMBER	DRAWN BY	PROJ MGR
2022.10	IMEG	IMEG

MECHANICAL CAPTIVEAIRE DRAWINGS

Sheet Title

Sheet Number of

M506

11/2/2023 3:35:44 PM Autodesk Docs://23002327.00 - Shiprock Pinnacle Hotel & Restaurant/MEP/2_23002327.00_Shiprock Pinnacle Hotel_C.rvt
DYRON MURPHY ARCHITECTS, P.C.

SPLIT SYSTEM UNIT SCHEDULE - HOTEL

NOTES:
1. PROVIDE 7-DAY PROGRAMMABLE THERMOSTAT. SUPPLY FAN SHALL OPERATE CONTINUOUSLY DURING SCHEDULED OCCUPIED TIMES.
2. PROVIDE VIBRATION ISOLATION MASON INDUSTRIES HG OR EQUIVALENT.
3. PROVIDE FLEX DUCT CONNECTION.
4. PROVIDE 1" MERV 8 FILTER AND FILTER RACKS.
5. PROVIDE 3/4" TRAPPED CONDENSATE DRAIN LINE AND ROUTE TO APPROVED PLUMBING FIXTURE.
6. PROVIDE CONDENSATE DRAIN PUMP MOUNTED TO WALL PUMP MODEL LITTLE GIANT VCMA-20 1/3 HP, 115V AC.
7. DUCT MOUNTED SMOKE DETECTOR IN RETURN DUCT, COOORDINATE WITH FIRE ALARM CONSULTANT, INSTALLED BY MECHANICAL. DUCT DETECTOR SHALL SHUT-DOWN THE RESPECTIVE UNIT UPON DETECTION OF SMOKE.

						COOLING					HEATING				AUXILARY HEAT					ELECTRICAL						MAX. DIMENSIONS (IN.)						
																								DISCONNECT								
TAG NAME	AREA SERVED	SUPPLY CFM	MINIMUM OUTSIDE AIR CFM	ESP (IN WG)	HP	TOTAL MBH	SENSIBLE MBH	E.A.T. DB °F	E.A.T. WB °F	L.A.T. DB °F	TOTAL MBH	E.A.T. DB °F	L.A.T. DB °F	HSPF	TOTAL MBH	E.A.T. DB °F	L.A.T. DB °F	KW	STAGES	MCA	MOCP	VOLTAGE	PHASE	BY (NOTE A)	TYPE (NOTE B)	LENGTH	WIDTH	HEIGHT	WEIGHT	MANUFACTURER	MODEL	NOTES
FC 1-01	CENTER NORTH	2,000	230	0.8	1	48.52	35.9	80	62	63	45.34	60	80.5	12.4	32.4	60	80.5	9.5	1	59.0	60	208	1	EC	F	25 1/4	20 1/4	51 7/8	170	CARRIER	MMD-AP0600VHG2UL	1, 2, 3, 4, 5
FC 1-02A	LOUNGE/LOBBY	1,200	390	0.8	0.5	28.768	21.3	82	62	65	34.245	60	86	8.2	27.3	60	86	8	1	46.2	50	208	1	EC	F	25 1/4	20 1/4	51 7/8	170	CARRIER	MMD-AP0360VHG2UL	1, 2, 3, 4, 5
FC 1-02B	LOUNGE/LOBBY	1,200	390	0.8	0.5	28.768	21.3	82	62	65	34.245	60	86	12.8	27.3	60	86	8	1	46.2	50	208	1	EC	F	25 1/4	20 1/4	51 7/8	170	CARRIER	MMD-AP0360VHG2UL	1, 2, 3, 4, 5
FC 1-03	BACK OF HOUSE	2,000	480	0.8	1	48.313	35.8	80	62	63	45.118	60	80.5	8.2	32.4	60	80.5	9.5	1	59.0	60	208	1	EC	F	31 1/4	24 1/4	57 7/8	253	CARRIER	MMD-AP0600VHG2UL	1, 2, 3, 4, 5, 7
FC 1-04	GUEST CORRIDOR	950	70	0.1	0.5	25.807	20.2	78	63	58	32.8746	62.8	95	12.8	0	0	0	0	0	4.5	15	208	1	EC	F	25 1/4	20 1/4	51 7/8	170	CARRIER	MMD-AP0300VHG2UL	1, 2, 3, 4, 5
FC 1-05	ELECT. ROOM	530	0	0.5	0.04	10.608	12	80	67	59	11.351	70	99.4	11	0	0	0	0	0	0.4	15	208	1	EC	F	9.875	41.375	12.5625	36	CARRIER	MMK-UP0181HP-UL	1, 2, 3, 4, 5
FC 1-06	PBX	530	0	0.5	0.04	15.913	12	80	67	59	16.816	70	99.4	12.8	0	0	0	0	0	0.4	15	208	1	EC	F	9.875	41.375	12.5625	36	CARRIER	MMK-UP0181HP-UL	1, 2, 3, 4, 5, 6
FC 1-07	FIRE SPRINKLER	320	0	0.5	0.04	15.913	8	80	67	57	16.816	70	103	12.8	0	0	0	0	0	0.3	15	208	1	EC	F	9.125	31.5	11.625	27	CARRIER	MMK-UP0121HP-UL	1, 2, 3, 4, 5
FC 1-ES	ELEVATOR SHAFT	650	0	0.6	0.5	26.439	20.5	76	63	47	32.6146	65.9	112	12.8	0	0	0	0	0	2.3	15	208	1	EC	F	29.625	55.25	10.875	93	CARRIER	MMD-UP0301BHP-UL	1, 2, 3, 4, 5
FC 2-01	ELEVATOR LOBBY	740	110	0.8	0.5	26.266	20.4	80	63	52	33.4945	61.5	103	12.8	0	0	0	0	0	2.3	15	208	1	EC	F	29.625	55.25	10.875	93	CARRIER	MMD-UP0301BHP-UL	1, 2, 3, 4, 5
FC 2-02	CORRIDORS	740	90	0.8	0.5	26.323	20.4	80	63	52	33.1945	63	104	12.8	0	0	0	0	0	2.3	15	208	1	EC	F	29.625	55.25	10.875	93	CARRIER	MMD-UP0301BHP-UL	1, 2, 3, 4, 5
FC 3-01	ELEVATOR LOBBY	740	110	0.8	0.5	26.266	20.4	80	63	52	33.4945	61.5	103	12.8	0	0	0	0	0	2.3	15	208	1	EC	F	29.625	55.25	10.875	93	CARRIER	MMD-UP0301BHP-UL	1, 2, 3, 4, 5
FC 3-02	CORRIDORS	740	90	0.8	0.5	26.323	20.4	80	63	52	33.1945	63	104	12.8	0	0	0	0	0	2.3	15	208	1	EC	F	29.625	55.25	10.875	93	CARRIER	MMD-UP0301BHP-UL	1, 2, 3, 4, 5
FC 4-01	ELEVATOR LOBBY	740	110	0.8	0.5	26.266	20.4	80	63	52	33.4945	61.5	103	12.8	0	0	0	0	0	2.3	15	208	1	EC	F	29.625	55.25	10.875	93	CARRIER	MMD-UP0301BHP-UL	1, 2, 3, 4, 5
FC 4-02	CORRIDORS	740	90	0.8	0.5	26.323	20.4	80	63	52	33.1945	63	104	12.8	0	0	0	0	0	2.3	15	208	1	EC	F	29.625	55.25	10.875	93	CARRIER	MMD-UP0301BHP-UL	1, 2, 3, 4, 5

SCHEDULE GENERAL NOTES:

A. DISCONNECT AND CONTROLLER STARTER FURNISHED AND INSTALLED BY:
MFR = MANUFACTURER
EC = ELECTRICAL CONTRACTOR.
MC = FURNISHED BY MECHANICAL CONTRACTOR, INSTALLED BY ELECTRICAL CONTRACTOR.
MFR/EC = FURNISHED LOOSE BY MANUFACTURER INSTALLED BY ELECTRICAL CONTRACTOR....

B. DISCONNECT TYPE:
F = FUSED
NF = NON-FUSED

C. CONTROLLER STARTER TYPE:
FV = FULL VOLTAGE
WYE = WYE-DELTA
SS = SOLID STATE (SOFT START)
MS = MANUAL STARTER
VFD = VARIABLE FREQUENCY DRIVE
VFD/B = VARIABLE FREQUENCY DRIVE WITH BYPASS

D. FAN RPM SHALL NOT EXCEED 110% OF SCHEDULED VALUE, WITH THE SCHEDULED WHEEL TYPE. SUBSTITUTION OF BI OR BIA FANS FOR FC IS ACCEPTABLE IF EFFICIENCY IS NOT LOWER.

E. NO EQUIPMENT SHALL BE SELECTED ABOVE 90% OF MOTOR NAME PLATE RATING.

F. MUST BE WITHIN +/- 10% OF SCHEDULED RPM.

G. CURB TYPE:
MFR = STANDARD CURB BY MANUFACTURER
GC = BY GENERAL CONTRACTOR
SAC = SOUND ATTENUATOR CURB

Key Name

CONDENSING UNIT SCHEDULE - HOTEL

NOTES:
1. PROVIDE REFRIGERANT LINES SIZED PER MANUFACTURER'S RECOMMENDATIONS.
2. PROVIDE CLEARANCE AROUND UNIT PER MANUFACTURER'S RECOMMENDATIONS.
3. PROVIDE P-TRAPS AND ARRANGE SLOPE OF REFRIGERANT PIPING FOR OIL RETURN.
4. PROVIDE SAFETY CONTROLS.
5. PROVIDE LOW AMBIENT KIT.
6. PROVIDE HAIL GUARD/MESH.
7. PROVIDE ROOF CURB/RAIL.

										ELECTRICAL						MAX. DIMENSIONS [IN]			WEIGHT				
														DISCONNECT									
TAG NAME	INDOOR UNIT(S) SERVED	LOCATION	NOMINAL DESIGN TONS	REFRIGERANT	AMBIENT TEMP °F	MIN. AMBIENT TEMP. °F	SEER	NUMBER OF STAGES	VOLTAGE	PHASES	MCA	MOCP	BY (NOTE A)	TYPE (NOTE B)	LENGTH	WIDTH	HEIGHT	DRY	OPERATING	MANUFACTURER	MODEL	NOTES
CU 1-01	FC 1-01	ROOFTOP	5	R410a	96.1	3.0	20.8	1	208	1	36.30	60	EC	F	14.6	39.8	61	311	311	CARRIER	MAP0607HS	1, 2, 3, 4, 5, 6, 7
CU 1-02A	FC 1-02A	ROOFTOP	3	R410a	96.1	3.0	21.5	1	208	1	36.30	60	EC	F	14.6	39.8	61	311	311	CARRIER	MAP0367HS	1, 2, 3, 4, 5, 6, 7
CU 1-02B	FC 1-02B	ROOFTOP	3	R410a	96.1	3.0	21.5	1	208	1	36.30	60	EC	F	14.6	39.8	61	311	311	CARRIER	MAP0367HS	1, 2, 3, 4, 5, 6, 7
CU 1-03	FC 1-03	ROOFTOP	5	R410a	96.1	3.0	20.8	1	208	1	36.30	60	EC	F	14.6	39.8	61	311	311	CARRIER	MAP0607HS	1, 2, 3, 4, 5, 6, 7
CU 1-04	FC 1-04	ROOFTOP	3	R410a	96.1	3.0	21.5	1	208	1	36.30	60	EC	F	14.6	39.8	61	311	311	CARRIER	MAP0367HS	1, 2, 3, 4, 5, 6, 7
CU 1-05	FC 1-05, FC 1-06, FC 1-07	ROOFTOP	4	R410a	96.1	3.0	19.1	1	208	1	36.30	60	EC	F	14.6	39.8	61	311	311	CARRIER	MAP0487HS	1, 2, 3, 4, 5, 6, 7
CU 1-ES	FC 1-ES	ROOFTOP	3	R410a	96.1	3.0	21.5	1	208	1	36.30	60	EC	F	14.6	39.8	61	311	311	CARRIER	MAP0367HS	1, 2, 3, 4, 5, 6, 7
CU 2-01	FC 2-01	ROOFTOP	3	R410a	96.1	3.0	21.5	1	208	1	36.30	60	EC	F	14.6	39.8	61	311	311	CARRIER	MAP0367HS	1, 2, 3, 4, 5, 6, 7
CU 2-02	FC 2-02	ROOFTOP	3	R410a	96.1	3.0	21.5	1	208	1	36.30	60	EC	F	14.6	39.8	61	311	311	CARRIER	MAP0367HS	1, 2, 3, 4, 5, 6, 7
CU 3-01	FC 3-01	ROOFTOP	3	R410a	96.1	3.0	21.5	1	208	1	36.30	60	EC	F	14.6	39.8	61	311	311	CARRIER	MAP0367HS	1, 2, 3, 4, 5, 6, 7
CU 3-02	FC 3-02	ROOFTOP	3	R410a	96.1	3.0	21.5	1	208	1	36.30	60	EC	F	14.6	39.8	61	311	311	CARRIER	MAP0367HS	1, 2, 3, 4, 5, 6, 7
CU 4-01	FC 4-01	ROOFTOP	3	R410a	96.1	3.0	21.5	1	208	1	36.30	60	EC	F	14.6	39.8	61	311	311	CARRIER	MAP0367HS	1, 2, 3, 4, 5, 6, 7
CU 4-02	FC 4-02	ROOFTOP	3	R410a	96.1	3.0	21.5	1	208	1	36.30	60	EC	F	14.6	39.8	61	311	311	CARRIER	MAP0367HS	1, 2, 3, 4, 5, 6, 7

AIR BALANCE - HOTEL:

BUILDING:
LEVEL-1:
FAN COIL OUTSIDE AIR = +1,560 CFM
GENERAL EXHAUST = - 480 CFM
GRAVITY RELIEF = - 970 CFM
TOTAL = +110 CFM (10% POSITIVE)

LEVEL-2:
FAN COIL OUTSIDE AIR = +200 CFM
TOTAL = +200 CFM (10% POSITIVE)

LEVEL-3:
FAN COIL OUTSIDE AIR = +200 CFM
TOTAL = +200 CFM (10% POSITIVE)

LEVEL-4:
FAN COIL OUTSIDE AIR = +200 CFM
TOTAL = +200 CFM (10% POSITIVE)

FAN SCHEDULE - HOTEL

NOTES:
1. PROVIDE MOTOR WITH THERMAL OVERLOADS.
2. PROVIDE DISCONNECT SWITCH.
3. PROVIDE BACKDRAFT DAMPER.
4. PROVIDE UNIT MOUNTED SPEED CONTROLLER.
5. EXHAUST FAN SHALL OPERATE CONTINUOUSLY DURING OCCUPIED HOURS.

										ELECTRICAL							
													DISCONNECT				
TAG NAME	AREA SERVED	CFM	S.P. IN. W.C.	FAN RPM (NOTE F)	DRIVE TYPE	BHP	HP	FLA	VOLTAGE	PHASES	BY (NOTE A)	TYPE (NOTE B)	WEIGHT	MANUFACTURER	MODEL	NOTES
EF-H1	CHUTE ROOM	120	0.38	758	DIRECT	0.01	0	0.5	115	1	EC	F	30	GREENHECK	SP-A200	1, 2, 3, 4, 5
EF-H2	EMPLYEE REST.	90	0.38	758	DIRECT	0.01	0	0.5	115	1	EC	F	30	GREENHECK	SP-A200	1, 2, 3, 4, 5
EF-H3	WOMEN REST.	90	0.38	758	DIRECT	0.01	0	0.5	115	1	EC	F	30	GREENHECK	SP-A200	1, 2, 3, 4, 5
EF-H4	WOMEN REST.	90	0.38	758	DIRECT	0.01	0	0.5	115	1	EC	F	30	GREENHECK	SP-A200	1, 2, 3, 4, 5
EF-H5	OUTDOOR MAINT.	90	0.38	758	DIRECT	0.01	0	0.5	115	1	EC	F	30	GREENHECK	SP-A200	1, 2, 3, 4, 5
EF-HA	GUEST RESTROOMS	50	0.38	555	DIRECT	0.02	0	0.3	115	1	EC	F	15	GREENHECK	SP-B110ES	1, 2, 3, 4, 5

PACKAGED TERMINAL AIR CONDITIONER SCHEDULE - HOTEL

NOTES:
1. PROVIDE ELECTRICAL SUBBASE
2. PROVIDE DIGITAL WALL MOUNTED REMOTE THERMOSTAT.
3. PROVIDE POWER CORD FOR ELECTRIC HEAT.
4. PROVIDE DEEP WALL INSULATED SLEEVE.
5. PROVIDE CONDENSATE DRAIN KIT.
6. PROVIDE MANUFACTURERS ARCHITECTURAL EXTERIOR GRILL. COORDINATE TYPE AND COLOR WITH OWNER/ARCHITECT PRIOR TO ORDERING....

					ELECTRICAL			ELECTRICAL		MAX. DIMENSIONS						
								DISCONNECT								
UNIT	AREA SERVED	CFM	OA CFM	MIN. EER	VOLTAGE	PHASES	AUX. HEAT KW	BY (NOTE A)	TYPE (NOTE B)	LENGTH	WIDTH	HEIGHT	WEIGHT	MANUFACTURER	MODEL	NOTES
PTAC-1	GUEST ROOMS	400	40	11.6	208	1	2.5	MFR	F	21.5	42	16	120	FRIEDRICH	PDE12K	1, 2, 3, 4, 5, 6

UNIT HEATER SCHEDULE - ELECTRIC - HOTEL

1. PROVIDE WALL MOUNTING KIT.
2. UNIT FURNISHED WITH BUILT-IN THERMOSTAT.
3. PROVIDE TWO-SPEED SUPPLY FAN MOTOR.
4. PROVIDE BOTTOM INTAKE AND TOP DISCHARGE.

						HEATING ELEMENT		ELECTRICAL					MAX. DIMENSIONS						
											DISCONNECT								
TAG NAME	AREA SERVED	CONFIGURATION	CFM	HP	RPM	STAGES	KW	VOLTAGE	PHASES	FLA	BY (NOTE A)	TYPE (NOTE B)	LENGTH	WIDTH	HEIGHT	WEIGHT	MANUFACTURER	MODEL	NOTES
UH 1-01	STAIRWELL	WALL MOUNTED	350	0.01	1600	1	3	208	1	14.5	EC	F	7.5	14	16	27	QMARK	MUH03-81	1, 2
UH 1-02	STAIRWELL	WALL MOUNTED	350	0.01	1600	1	3	208	1	14.5	EC	F	7.5	14	16	27	QMARK	MUH03-81	1, 2
UH 1-ME	MAIN ENTRANCE	WALL MOUNTED	230	0.01	1400	1	3	208	1	15.4	EC	F	33"	9"	25"	100	MARKEL	6333A	1, 2, 3, 4

LOUVER SCHEDULE - HOTEL

NOTES:
1. PROVIDE BIRD SCREEN.
2. DRAIN GUTTER AT EACH BLADE.
3. ALUMINUM CONSTRUCTION.

			SIZE (INCHES)		FREE AREA VELOCITY								
TAG NAME	AREA SERVED	CFM	WIDTH	HEIGHT		S.P. IN. W.C.	FINISH	VOLTAGE	PHASES	ELEMENT KW	MANUFACTURER	MODEL	NOTES
L 1-1	ZONE 1 OA	420	24	18	400	0.16	MILL	208	1	0.54	RUSKIN	ELF6375DX	1, 2, 3
L 1-2	ZONE 3 OA	815	30	24	400	0.16	MILL	208	1	0.9	RUSKIN	ELF6375DX	1, 2, 3
L 1-3	ZONE 4 OA	70	12	12	400	0.16	MILL	208	1	0.18	RUSKIN	ELF6375DX	1, 2, 3
L 1-4	DRYER	1820	42	30	400	0.16	MILL	208	1	1.575	RUSKIN	ELF6375DX	1, 2, 3
L 1-E1	LEVEL 1 RELIEF	1410	30	24	600	0.04	MILL	0	1	0	RUSKIN	ELF6375DX	1, 2, 3
L 1-E2	OUTDOOR MAINT.	180	18	12	500	0.04	MILL	0	1	0	RUSKIN	ELF6375DX	1, 2, 3
L 1-E3	LAUNDRY CHUTE	120	12	12	500	0.04	MILL	0	1	0	RUSKIN	ELF6375DX	1, 2, 3
L 1-E4	DRYER	1820	30	30	600	0.06	MILL	0	1	0	RUSKIN	ELF6375DX	1, 2, 3
L U-1	UPPER ELEVATOR LOBBY	110	12	12	400	0.16	MILL	208	1	0.18	RUSKIN	ELF6375DX	1, 2, 3
L U-2	UPPER CORRIDOR	90	12	12	400	0.16	MILL	208	1	0.18	RUSKIN	ELF6375DX	1, 2, 3

AIR TERMINAL SCHEDULE - HOTEL

NOTES:
1. CONTRACTOR SHALL DETERMINE PROPER BORDER TYPE TO MATCH CEILING CONSTRUCTION.
2. REFER TO DRAWINGS FOR NECK SIZE. ALL BRANCH DUCTWORK TO AIR TERMINALS SHALL BE NECK SIZE UNLESS NOTED OTHERWISE.
3. CONTRACTOR SHALL COORDINATE COLOR, FINISH AND EXACT LOCATION WITH ARCHITECT PRIOR TO ORDERING AND INSTALLING.
4. PROVIDE OPPOSED BLADE DAMPER UNLESS NOTED OTHERWISE.

TAG NAME	FACE SIZE	TYPE	BORDER	MATERIAL	FINISH	MANUFACTURER	MODEL	NOTES
RG-1	INLET +2	35 DEGREE DEFLECTION	SURFACE	STEEL	WHITE	TITUS	350RL	1, 2, 3
RG-2	24x24	PERFORATED FACE	LAY-IN	STEEL	WHITE	TITUS	350RL	1, 2, 3
SD-1	NECK SIZE +6	LOUVERED FACE	SURFACE	STEEL	WHITE	TITUS	TDC	1, 2, 3
SD-2	24x24	3-CONE	LAY-IN	STEEL	WHITE	TITUS	TMS	1, 2, 3, 4

MOTOR OPERATED DAMPER SCHEDULE - HOTEL

NOTES:
1. COORDINATE DAMPER ACTUATOR LOCATION AND MOUNTING REQUIREMENTS WITH ELECTRICAL CONTRACTOR.
2. DAMPER SHALL BE INTERLOCKED WITH THE CLOTHES DRYERS TO OPEN UPON ENERGIZING OF DRYERS. CLOTHES DRYERS SHALL BE ON A DELAY AND DAMPER SHALL OPEN PRIOR TO DRYERS OPERATION.

		SIZE		CFM							
TAG NAME	AREA SERVED	WIDTH	HEIGHT	MIN.	MAX.	BLADE CONFIGURATION	BLADE ORIENTATION	ACTUATOR TYPE	ACTUATOR STYLE	POWER FAILURE POSITION	NOTES
MOD-1	DRYER ROOM	42	30	0	1810	OPPOSED	HORIZONTAL	ELECTRIC	TWO POSITION	NORMALLY CLOSED (NC)	1, 2

IMEG
9000 E PIMA CENTER PARKWAY
SUITE 320
SCOTTSDALE, AZ 85258
P: 480.222.3771
www.imegcorp.com

IMEG CORP. RESERVES PROPRIETARY RIGHTS, INCLUDING COPYRIGHTS, TO THIS DRAWING AND THE DATA SHOWN THEREON. SAID DRAWING AND/OR DATA ARE THE EXCLUSIVE PROPERTY OF IMEG CORP. AND SHALL NOT BE USED OR REPRODUCED FOR ANY OTHER PROJECT WITHOUT THE EXPRESS WRITTEN APPROVAL AND PARTICIPATION OF IMEG CORP. ©2023 IMEG CORP.

0 1 2 3
REF. SCALE IN INCHES PROJECT #23002327.00

STAMP

BENJAMIN W. YEUNG
NEW MEXICO
LICENSED PROFESSIONAL ENGINEER

11.03.2023

DYRON MURPHY ARCHITECTS, P.C.
4505 Montbel Place NE, Albuquerque, New Mexico 87107

SHIPROCK PINNACLE HOTEL & RESTAURANT

SHIPROCK, NEW MEXICO

100% CONSTRUCTION DOCUMENTS

ISSUED FOR CONSTRUCTION

NOVEMBER 3, 2023

PROJECT NUMBER	DRAWN BY	PROJ MGR
2022.10	IMEG	IMEG

MECHANICAL SCHEDULES

Sheet Title

Sheet Number of

M600

11/2/2023 3:35:8 PM Autodesk Docs://23002327.00 - Shiprock Pinnacle Hotel & Restaurant/MEP22_23002327.00_Shiprock Pinnacle Hotel_C.rvt
DYRON MURPHY ARCHITECTS, P.C.

COM*check* Software Version COMcheckWeb

Mechanical Compliance Certificate

Project Information

Energy Code: 2018 IECC
Project Title: shiprock hotel
Location: Shiprock, New Mexico
Climate Zone: 5b
Project Type: New Construction

Construction Site: Owner/Agent: Designer/Contractor:

Additional Efficiency Package(s)

Credits: 1.0 Required 1.0 Proposed
Reduced Lighting Power, 1.0 credit

Mechanical Systems List

Quantity System Type & Description

1 PTAC-1 (Single Zone w/ PerimeterSystem):
Heating: 1 each - Other, Electric, Capacity = 11 kBtu/h
No minimum efficiency requirement applies
Cooling: 85 each - Packaged Terminal Unit, Capacity = 12 kBtu/h, Air-Cooled Condenser, No Economizer, Economizer exception: Low Capacity Residential
Proposed Efficiency = 11.60 EER, Required Efficiency = 10.40 EER
Proposed Part Load Efficiency = 0.00 , Required Part Load Efficiency = 0.00

1 FC 1-01 (Single Zone):
Split System Heat Pump
Heating Mode: Capacity = 81 kBtu/h,
Proposed Efficiency = 12.47 HSPF, Required Efficiency = 8.20 HSPF
Cooling Mode: Capacity = 48 kBtu/h,
Proposed Efficiency = 14.64 SEER, Required Efficiency = 14.00 SEER
Proposed Part Load Efficiency = 20.94 , Required Part Load Efficiency = 0.00
Fan System: FAN SYSTEM 1 -- Compliance (Motor nameplate HP and fan efficiency method) : Passes

Fans:
FAN 1 Supply, Constant Volume, 2000 CFM, 1.0 motor nameplate hp, 0.0 fan efficiency grade, 0.0 total fan efficiency, 0.0 design fan efficiency , fan exception: Single fan <= 5HP

1 FC 1-02A (Single Zone):
Split System Heat Pump
Heating Mode: Capacity = 61 kBtu/h,
Proposed Efficiency = 8.20 HSPF, Required Efficiency = 8.20 HSPF
Cooling Mode: Capacity = 28 kBtu/h,
Proposed Efficiency = 14.80 SEER, Required Efficiency = 14.00 SEER
Proposed Part Load Efficiency = 21.16 , Required Part Load Efficiency = 0.00
Fan System: FAN SYSTEM 2 -- Compliance (Motor nameplate HP and fan efficiency method) : Passes

Fans:
FAN 2 Supply, Constant Volume, 1200 CFM, 0.5 motor nameplate hp, 0.0 fan efficiency grade, 0.0 total fan efficiency, 0.0 design fan efficiency , fan exception: Single fan <= 5HP

1 FC 1-02B (Single Zone):
Split System Heat Pump
Heating Mode: Capacity = 61 kBtu/h,
Proposed Efficiency = 12.80 HSPF, Required Efficiency = 8.20 HSPF
Cooling Mode: Capacity = 28 kBtu/h,
Proposed Efficiency = 14.80 SEER, Required Efficiency = 14.00 SEER
Proposed Part Load Efficiency = 21.16 , Required Part Load Efficiency = 0.00
Fan System: FAN SYSTEM 2 -- Compliance (Motor nameplate HP and fan efficiency method) : Passes

Fans:
FAN 2 Supply, Constant Volume, 1200 CFM, 0.5 motor nameplate hp, 0.0 fan efficiency grade, 0.0 total fan efficiency, 0.0 design fan efficiency , fan exception: Single fan <= 5HP

1 FC 1-03 (Single Zone):
Split System Heat Pump
Heating Mode: Capacity = 81 kBtu/h,
Proposed Efficiency = 12.47 HSPF, Required Efficiency = 8.20 HSPF
Cooling Mode: Capacity = 48 kBtu/h,
Proposed Efficiency = 14.64 SEER, Required Efficiency = 14.00 SEER
Proposed Part Load Efficiency = 20.94 , Required Part Load Efficiency = 0.00
Fan System: FAN SYSTEM 1 -- Compliance (Motor nameplate HP and fan efficiency method) : Passes

Fans:
FAN 1 Supply, Constant Volume, 2000 CFM, 1.0 motor nameplate hp, 0.0 fan efficiency grade, 0.0 total fan efficiency, 0.0 design fan efficiency , fan exception: Single fan <= 5HP

1 FC 1-04 (Single Zone):
Split System Heat Pump
Heating Mode: Capacity = 32 kBtu/h,
Proposed Efficiency = 12.80 HSPF, Required Efficiency = 8.20 HSPF
Cooling Mode: Capacity = 25 kBtu/h,
Proposed Efficiency = 14.80 SEER, Required Efficiency = 14.00 SEER
Proposed Part Load Efficiency = 21.16 , Required Part Load Efficiency = 0.00
Fan System: FAN SYSTEM 3 -- Compliance (Motor nameplate HP and fan efficiency method) : Passes

Fans:
FAN 4 Supply, Constant Volume, 950 CFM, 0.5 motor nameplate hp, 0.0 fan efficiency grade, 0.0 total fan efficiency, 0.0 design fan efficiency , fan exception: Single fan <= 5HP

1 FC 1-05 (Single Zone):
Split System Heat Pump
Heating Mode: Capacity = 11 kBtu/h,
Proposed Efficiency = 11.00 HSPF, Required Efficiency = 8.20 HSPF
Cooling Mode: Capacity = 10 kBtu/h,
Proposed Efficiency = 14.10 SEER, Required Efficiency = 14.00 SEER
Proposed Part Load Efficiency = 20.16 , Required Part Load Efficiency = 0.00
Fan System: FAN SYSTEM 5 -- Compliance (Motor nameplate HP and fan efficiency method) : Passes

Fans:
FAN 9 Supply, Constant Volume, 530 CFM, 0.1 motor nameplate hp, 0.0 fan efficiency grade, 0.0 total fan efficiency, 0.0 design fan efficiency , fan exception: Single fan <= 5HP

1 FC 1-06 (Single Zone):
Split System Heat Pump
Heating Mode: Capacity = 16 kBtu/h,
Proposed Efficiency = 12.80 HSPF, Required Efficiency = 8.20 HSPF
Cooling Mode: Capacity = 15 kBtu/h,
Proposed Efficiency = 14.80 SEER, Required Efficiency = 14.00 SEER
Proposed Part Load Efficiency = 21.16 , Required Part Load Efficiency = 0.00
Fan System: FAN SYSTEM 5 -- Compliance (Motor nameplate HP and fan efficiency method) : Passes

Fans:
FAN 9 Supply, Constant Volume, 530 CFM, 0.1 motor nameplate hp, 0.0 fan efficiency grade, 0.0 total fan efficiency, 0.0 design fan efficiency , fan exception: Single fan <= 5HP

1 FC 1-07 (Single Zone):
Split System Heat Pump
Heating Mode: Capacity = 16 kBtu/h,
Proposed Efficiency = 12.80 HSPF, Required Efficiency = 8.20 HSPF
Cooling Mode: Capacity = 15 kBtu/h,
Proposed Efficiency = 14.80 SEER, Required Efficiency = 14.00 SEER
Proposed Part Load Efficiency = 21.16 , Required Part Load Efficiency = 0.00
Fan System: FAN SYSTEM 5 -- Compliance (Motor nameplate HP and fan efficiency method) : Passes

Fans:
FAN 9 Supply, Constant Volume, 530 CFM, 0.1 motor nameplate hp, 0.0 fan efficiency grade, 0.0 total fan efficiency, 0.0 design fan efficiency , fan exception: Single fan <= 5HP

1 FC 1-ES (Single Zone):
Split System Heat Pump
Heating Mode: Capacity = 26 kBtu/h,
Proposed Efficiency = 12.80 HSPF, Required Efficiency = 8.20 HSPF
Cooling Mode: Capacity = 48 kBtu/h,
Proposed Efficiency = 14.80 SEER, Required Efficiency = 14.00 SEER
Proposed Part Load Efficiency = 21.16 , Required Part Load Efficiency = 0.00
Fan System: FAN SYSTEM es -- Compliance (Motor nameplate HP and fan efficiency method) : Passes

Fans:
FAN 7 Supply, Constant Volume, 650 CFM, 0.5 motor nameplate hp, 0.0 fan efficiency grade, 0.0 total fan efficiency, 0.0 design fan efficiency , fan exception: Single fan <= 5HP

1 FC 2-01 (Single Zone):
Split System Heat Pump
Heating Mode: Capacity = 33 kBtu/h,
Proposed Efficiency = 12.80 HSPF, Required Efficiency = 8.20 HSPF
Cooling Mode: Capacity = 26 kBtu/h,
Proposed Efficiency = 14.80 SEER, Required Efficiency = 14.00 SEER
Proposed Part Load Efficiency = 21.16 , Required Part Load Efficiency = 0.00
Fan System: FAN SYSTEM 2-01 -- Compliance (Motor nameplate HP and fan efficiency method) : Passes

Fans:
FAN 8 Supply, Constant Volume, 740 CFM, 0.5 motor nameplate hp, 0.0 fan efficiency grade, 0.0 total fan efficiency, 0.0 design fan efficiency , fan exception: Single fan <= 5HP

1 FC 2-02 (Single Zone):
Split System Heat Pump
Heating Mode: Capacity = 33 kBtu/h,
Proposed Efficiency = 12.80 HSPF, Required Efficiency = 8.20 HSPF
Cooling Mode: Capacity = 26 kBtu/h,
Proposed Efficiency = 14.80 SEER, Required Efficiency = 14.00 SEER
Proposed Part Load Efficiency = 21.16 , Required Part Load Efficiency = 0.00
Fan System: FAN SYSTEM 2-01 -- Compliance (Motor nameplate HP and fan efficiency method) : Passes

Fans:
FAN 8 Supply, Constant Volume, 740 CFM, 0.5 motor nameplate hp, 0.0 fan efficiency grade, 0.0 total fan efficiency, 0.0 design fan efficiency , fan exception: Single fan <= 5HP

1 FC 3-01 (Single Zone):
Split System Heat Pump
Heating Mode: Capacity = 33 kBtu/h,
Proposed Efficiency = 12.80 HSPF, Required Efficiency = 8.20 HSPF
Cooling Mode: Capacity = 26 kBtu/h,
Proposed Efficiency = 14.80 SEER, Required Efficiency = 14.00 SEER
Proposed Part Load Efficiency = 21.16 , Required Part Load Efficiency = 0.00
Fan System: FAN SYSTEM 2-01 -- Compliance (Motor nameplate HP and fan efficiency method) : Passes

Fans:
FAN 8 Supply, Constant Volume, 740 CFM, 0.5 motor nameplate hp, 0.0 fan efficiency grade, 0.0 total fan efficiency, 0.0 design fan efficiency , fan exception: Single fan <= 5HP

1 FC 3-02 (Single Zone):
Split System Heat Pump
Heating Mode: Capacity = 33 kBtu/h,
Proposed Efficiency = 12.80 HSPF, Required Efficiency = 8.20 HSPF
Cooling Mode: Capacity = 26 kBtu/h,
Proposed Efficiency = 14.80 SEER, Required Efficiency = 14.00 SEER
Proposed Part Load Efficiency = 21.16 , Required Part Load Efficiency = 0.00
Fan System: FAN SYSTEM 2-01 -- Compliance (Motor nameplate HP and fan efficiency method) : Passes

Fans:
FAN 8 Supply, Constant Volume, 740 CFM, 0.5 motor nameplate hp, 0.0 fan efficiency grade, 0.0 total fan efficiency, 0.0 design fan efficiency , fan exception: Single fan <= 5HP

1 FC 4-01 (Single Zone):
Split System Heat Pump
Heating Mode: Capacity = 33 kBtu/h,
Proposed Efficiency = 12.80 HSPF, Required Efficiency = 8.20 HSPF
Cooling Mode: Capacity = 26 kBtu/h,
Proposed Efficiency = 14.80 SEER, Required Efficiency = 14.00 SEER
Proposed Part Load Efficiency = 21.16 , Required Part Load Efficiency = 0.00
Fan System: FAN SYSTEM 2-01 -- Compliance (Motor nameplate HP and fan efficiency method) : Passes

Quantity System Type & Description

Fans:
FAN 8 Supply, Constant Volume, 740 CFM, 0.5 motor nameplate hp, 0.0 fan efficiency grade, 0.0 total fan efficiency, 0.0 design fan efficiency , fan exception: Single fan <= 5HP

1 FC 4-02 (Single Zone):
Split System Heat Pump
Heating Mode: Capacity = 45 kBtu/h,
Proposed Efficiency = 12.80 HSPF, Required Efficiency = 8.20 HSPF
Cooling Mode: Capacity = 26 kBtu/h,
Proposed Efficiency = 14.80 SEER, Required Efficiency = 14.00 SEER
Proposed Part Load Efficiency = 21.16 , Required Part Load Efficiency = 0.00
Fan System: FAN SYSTEM 2-01 -- Compliance (Motor nameplate HP and fan efficiency method) : Passes

Fans:
FAN 8 Supply, Constant Volume, 740 CFM, 0.5 motor nameplate hp, 0.0 fan efficiency grade, 0.0 total fan efficiency, 0.0 design fan efficiency , fan exception: Single fan <= 5HP

Mechanical Compliance Statement

Compliance Statement: The proposed mechanical design represented in this document is consistent with the building plans, specifications, and other calculations submitted with this permit application. The proposed mechanical systems have been designed to meet the 2018 IECC requirements in COM*check* Version COMcheckWeb and to comply with any applicable mandatory requirements listed in the Inspection Checklist.

VENTILATION CALCULATION (UMC_2021)

SPACE NAME [N/A]	SPACE AREA [SQFT]	OCCUPANT DENSITY [#/1000 SQFT]	CALCULATED OCCUPANTS	FIXED SEATS	USE OCCUPANCY	OUTDOOR AIR (Rp) [CFM/Person]	OUTDOOR AIR (Ra) [CFM/SQFT]	EXHAUST AIR [CFM/SQFT]	DISTRIBUTION EFFECTIVENESS [N/A]	PLUMBING FIXTURE COUNT [N/A]	FIXTURE EXHAUST AIR [CFM/Fixture]	REQUIRED OUTDOOR AIR [CFM]	USE OUTDOOR AIR [CFM]	USE EXHAUST AIR [CFM]
FC 1-01														
Exercise (Floor 1)	389	10.0	3.9		3.9	20.0	0.06	0.0	0.8			126	130	0
Mech (Floor 1)	60	0.0	0.0		0.0	0.0	0.00	0.0	0.8			0	0	0
Guest Laundry (Floor 1)	230	20.0	4.6		4.6	7.5	0.06	0.0	0.8			60	70	0
Ice/Vend (Floor 1)	80	30.0	2.4		2.4	7.5	0.06	0.0	0.8			29	30	0
Mechanical #3 (Floor 1)	195	0.0	0.0		0.0	0.0	0.00	0.0	0.8			0	0	0
											Total	215	230	0
FC 1-02A														
Lobby (Floor 1)	245	30.0	7.4		7.4	7.5	0.06	0.0	0.8			87	90	0
Vest. (Floor 1)	97.5	30.0	2.9		2.9	7.5	0.06	0.0	0.8			35	40	0
Lounge (Floor 1)	717.5	30.0	21.5		21.5	7.5	0.06	0.0	0.8			256	260	0
											Total	378	390	
FC 1-02B														
Lobby (Floor 1)	245	30.0	7.4		7.4	7.5	0.06	0.0	0.8			87	90	0
Vest. (Floor 1)	97.5	30.0	2.9		2.9	7.5	0.06	0.0	0.8			35	40	0
Lounge (Floor 1)	717.5	30.0	21.5		21.5	7.5	0.06	0.0	0.8			256	260	0
											Total	378	390	0
FC 1-03														
Break (Floor 1)	135	50.0	6.8		6.8	5.0	0.06	0.0	0.8			52	60	0
Dryers (Floor 1)	245	10.0	2.5		2.5	25.0	0.00	0.0	0.8			77	80	0
Laundry (Floor 1)	290	10.0	2.9		2.9	25.0	0.00	0.0	0.8			91	100	0
Linen (Floor 1)	85	0.0	0.0		0.0	0.0	0.00	0.0	0.8			0	0	0
Employee Restroom (Floor 1)	60	0.0	0.0		0.0	0.0	0.00	0.0	0.8	1	90	0	0	90
Chute Room (Floor 1)	115	0.0	0.0		0.0	0.0	0.00	0.0	0.8			0	0	0
Grab N' Go (Floor 1)	95	30.0	2.9		2.9	7.5	0.06	0.0	0.8			34	40	0
Registration (Floor 1)	180	30.0	5.4		5.4	7.5	0.06	0.0	0.8			64	70	0
GM Office (Floor 1)	115	5.0	0.6		0.6	5.0	0.06	0.0	0.8			12	20	0
Elevator Lobby (Floor 1)	230	30.0	6.9		6.9	7.5	0.06	0.0	0.8			82	90	0
Unused Mechanical #2 (Floor 1)	80	0.0	0.0		0.0	0.0	0.00	0.0	0.8			0	0	0
Seasonal Storage (Floor 1)	90	0.0	0.0		0.0	0.0	0.00	0.0	0.8			0	0	0
Outdoor Equip. (Floor 1)	250	0.0	0.0		0.0	0.0	0.00	0.0	0.8			0	0	0
House Keeping Exec. (Floor 1)	135	5.0	0.7		0.7	5.0	0.06	0.0	0.8			14	20	0
Outdoor Corridor (Floor 1)	40	0.0	0.0		0.0	0.0	0.00	0.0	0.8			0	0	0
Office Mechanical	65	0.0	0.0		0.0	0.0	0.00	0.0	0.8			0	0	0
											Total	426	480	90
FC 1-04														
Men's (Floor 1)	70	0.0	0.0		0.0	0.0	0.00	0.0	0.8	1	90	0	0	90
Women's (Floor 1)	70	0.0	0.0		0.0	0.0	0.00	0.0	0.8	1	90	0	0	90
Room Corridor (Floor 1)	920	0.0	0.0		0.0	0.0	0.06	0.0	0.8			69	70	0
Storage (Floor 1)	205	0.0	0.0		0.0	0.0	0.00	0.0	0.8			0	0	0
											Total	69	70	180
FC 2-01,FC 3-01, FC 4-01														
Elevator Lobby (Upper Floors)	180	30.0	5.4		5.4	7.5	0.06	0.0	0.8			64	70	0
Linen (Upper Floors)	230	0.0	0.0		0.0	0.0	0.00	0.0	0.8			0	0	0
Ice/Vend (Upper Floors)	100	30.0	3.0		3.0	7.5	0.06	0.0	0.8			36	40	0
											Total	100	110	0
FC 2-02, FC 3-02, FC 4-02														
Corridor (Floor 2)	1150	0.0	0.0		0.0	0.0	0.06	0.0	0.8			86	90	0
Storage (Floor 2)	200	0.0	0.0		0.0	0.0	0.00	0.0	0.8			0	0	0
											Total	86	90	0
PTAC-1														
Generic Hotel Room	290	10.0	2.9		2.9	5.0	0.06	0.0	0.8			40	40	0
											Total	40	40	0

IMEG
9000 E PIMA CENTER PARKWAY
SUITE 320
SCOTTSDALE, AZ 85258
P: 480.222.3771
www.imegcorp.com

IMEG CORP. RESERVES PROPRIETARY RIGHTS, INCLUDING COPYRIGHTS, TO THIS DRAWING AND THE DATA SHOWN THEREON. SAID DRAWING AND/OR DATA ARE THE EXCLUSIVE PROPERTY OF IMEG CORP., AND SHALL NOT BE USED OR REPRODUCED FOR ANY OTHER PROJECT WITHOUT THE EXPRESS WRITTEN APPROVAL AND PARTICIPATION OF IMEG CORP. ©2023 IMEG CORP.

0 1 2 3
REF. SCALE IN INCHES PROJECT #23002327.00

STAMP

BENJAMIN W. YEUNG
NEW MEXICO
14802
LICENSED PROFESSIONAL ENGINEER
11.03.2023

DYRON MURPHY ARCHITECTS, P.C.
4505 Montbel Place NE, Albuquerque, New Mexico 87107

SHIPROCK PINNACLE HOTEL & RESTAURANT

SHIPROCK, NEW MEXICO

100% CONSTRUCTION DOCUMENTS

ISSUED FOR CONSTRUCTION

NOVEMBER 3, 2023

PROJECT NUMBER	DRAWN BY	PROJ MGR
2022.10	IMEG	IMEG

MECHANICAL SCHEDULES

Sheet Title

Sheet Number of

M601

11/20/2023 3:55:59 PM Autodesk Docs://23002327.00 - Shiprock Pinnacle Hotel & Restaurant/MEP22_23002327.00_Shiprock Pinnacle Hotel_C.rvt
DYRON MURPHY ARCHITECTS, P.C.

PACKAGED ROOFTOP HEAT PUMP UNIT SCHEDULE - RESTAURANT

NOTES:
1. AIR CONDITIONING SYSTEM SHALL COMPLY WITH ASHRAE 90.1-2004 STANDARDS.
2. SOUND RATING SHALL BE LESS THAN 82 dB PER ARI 270-95 CONDITIONS & ANSI STDS. S1-32-1981
3. PROVIDE 3/4" TRAPPED CONDENSATE DRAIN AND ROUTE TO APPROVED PLUMBING FIXTURE (REFER TO MECHANICAL PIPING PLAN).
4. PROVIDE 14" ROOF CURB.
5. PROVIDE FLEX CONNECTION AT DUCT CONNECTIONS.
6. PROVIDE 2" MERV 13 REPLACEABLE FILTER.
7. PROVIDE ECOBEE EMS-SI WIFI ENABLED 7-DAY PROGRAMMABLE THERMOSTAT. FIELD COORDINATE EXACT LOCATION OF THEMOSTAT WITH OWNER.(SUPPLY FAN SHALL OPERATE CONTINUOSLY DURING SCHEDULED OCCUPIED TIMES).
8. PROVIDE HAIL GUARDS.
9. PROVIDE OUTSIDE AIR HOOD WITH 2 POSITION DAMPER. DAMPER TO REMAIN AT SET POSITION DURING SUPPLY FAN OPERATION WHEN THE INDOOR FAN CYCLES OFF THE DAMPER SHALL CLOSE.
10. PROVIDE MICROMETL ENTHALPY OUTSIDE AIR ECONOMIZER AND POWER EXHAUST WITH FULLY MODULATING 0-100% POWERED EXHAUSTER. POWERED EXHAUST REQUIRED A DEDICATED ELECTRICAL CONNECTION AND DISCONNECT (COORDINATE WITH ELECTRICAL).
11. DUCT MOUNTED SMOKE DETECTOR IN RETURN DUCT, COOORDINATE WITH FIRE ALARM CONSULTANT, INSTALLED BY MECHANICAL. DUCT DETECTOR SHALL SHUT-DOWN THE RESPECTIVE UNIT UPON DETECTION OF SMOKE.
12. PROVIDE MANUFACTURER'S JADE CONTROLLER, DEMAND CONTROL VENTILATION (DCV) AND WALL MOUNTED CO2 SENSOR.

TAG NAME	AREA SERVED	NOMINAL TONS	MINIMUM OUTSIDE AIR (CFM)	DCV MINIMUM OUTSIDE AIR (CFM)	SUPPLY FAN				UNIT ELECTRICAL DATA								COOLING COIL - DX							HEATING COIL - DX				AUXILARY HEATING COIL				FILTER TYPE	DISCHARGE DIRECTION	CURB TYPE (NOTE G)	MAX DIMENSIONS [IN.]			OPERATING WEIGHT INCLUDING ECONOMIZER POWER EXHAUSTER	MANUFACTURER	MODEL	NOTES
					CFM TOTAL	EXT S.P. IN W.C.	RPM	BHP	NO. OF POWER CONNECTIONS	VOLTAGE	PHASES	FLA	MCA	MOCP	DISCONNECT(S) BY (NOTE A)	DISCONNECT(S) TYPE (NOTE B)	SCCR	E.A.T. DB °F	E.A.T. WB °F	L.A.T. DB °F	L.A.T. WB °F	SENSIBLE MBH	TOTAL MBH	AMB TEMP °F	SEER (EER)	TOTAL MBH	E.A.T. DB °F	L.A.T. DB °F	AMB TEMP °F	KW	EAT DB °F	LAT DB °F	NUMBER OF STAGES			(NOTE G)	LENGTH	WIDTH	HEIGHT				
RTU-R1A	BALLROOM	10	1130	545	4000	0.75	1907	2	1	208	3	153 A	160 A	175 A	EC	F	5,000	81.1	62.0	53.3	52.8	105	105.00	96	11	55	55	70.6	1	31.8	70.60	101.3	2	2" MERV 8	HORIZONTAL	MFR	115.9 in	63.4 in	57.4 in	1200	CARRIER	50FCQM14	1, 2, 3, 4, 5, 6, 7, 8, 10, 11, 12
RTU-R1B	BALLROOM	7.5	850	450	3000	0.75	1573	1.14	1	208	3	118 A	123 A	125 A	EC	F	5,000	81.1	62.0	52.4	52.4	75.97	75.97	96	11.2	36.53	55	68.8	1	24	68.80	99.8	2	2" MERV 8	HORIZONTAL	MFR	88.1 in	59.5 in	49.4 in	1025	CARRIER	50FCQM08	1, 2, 3, 4, 5, 6, 7, 8, 10, 11, 12
RTU-R1C	BALLROOM	12.5	1410	255	5000	0.75	1714	2.12	1	208	3	170 A	178 A	200 A	EC	F	5,000	81.1	62.0	51.1	51.1	122	122.00	96	10.6	55.6	55	67.6	1	37.6	67.60	96.7	2	2" MERV 8	HORIZONTAL	MFR	88.1 in	59.5 in	49.4 in	1500	CARRIER	50FCQM14	1, 2, 3, 4, 5, 6, 7, 8, 10, 11, 12
RTU-R2	RESTAURANT CORRIDOR	3	320	0	1200	0.82	1951	0.44	1	208	3	44 A	47 A	50 A	EC	F	5,000	77.1	62.6	52.4	52.4	26.16	30.67	96	17	13	63.8	76.1	1	7.9	76.10	101.6	1	2" MERV 8	VERTICAL	MFR	74.4 in	46.6 in	33.4 in	620	CARRIER	50GCQJ04	1, 2, 3, 4, 5, 6, 7, 8, 9
RTU-R3	RESTAURANT BOH	3	300	0	1200	0.82	1951	0.44	1	208	3	44 A	47 A	50 A	EC	F	5,000	75.5	62.9	52.8	52.8	24.04	30.84	96	17	12.34	68.5	80.2	1	7.9	80.20	105.6	1	2" MERV 8	VERTICAL	MFR	74.4 in	46.6 in	33.4 in	620	CARRIER	50GCQJ04	1, 2, 3, 4, 5, 6, 7, 8, 9
RTU-R4	KITCHEN	12.5	500	0	5000	0.75	1706	2.09	1	208	3	126 A	131 A	150 A	EC	F	5,000	77.0	62.7	56.4	53.2	90.86	129.01	96	15	48.53	64	74.9	1	24	74.90	104.7	2	2" MERV 8	VERTICAL	MFR	115.9	64.5	57.4	1500	CARRIER	50FCQM14	1, 2, 3, 4, 5, 6, 7, 8, 10, 11
RTU-R5	RESTAURANT	10	1590	530	4000	0.75	1591	1.19	1	208	3	128 A	133 A	150 A	EC	F	5,000	82.0	61.8	50.0	48.7	84.75	100.46	96	11	48.53	55	73.3	1	24	73.30	104.3	2	2" MERV 8	VERTICAL	MFR	88.1 in	59.5 in	49.4 in	1200	CARRIER	50FCQM14	1, 2, 3, 4, 5, 6, 7, 8, 10, 11, 12
RTU-R6	BOARDROOM	4	300	0	1600	0.93	1965	0.67	1	208	3	65 A	69 A	70 A	EC	F	5,000	77.8	62.5	52.5	52.5	35.75	41.13	96	16	18.25	61.9	74.8	1	12	74.80	104	1	2" MERV 8	VERTICAL	MFR	74.4 in	46.6 in	41.4 in	725	CARRIER	50GCQJ05	1, 2, 3, 4, 5, 6, 7, 8, 9
RTU-R7	RESTAURANT RECEPTION	3	300	0	1200	0.82	1951	0.44	1	208	3	57 A	61 A	70 A	EC	F	5,000	81.3	61.9	51.6	51.6	31.47	31.47	96	17	14.23	55	68.4	1	12	68.40	107	1	2" MERV 8	VERTICAL	MFR	74.4 in	46.6 in	33.4 in	610	CARRIER	50GCQJ04	1, 2, 3, 4, 5, 6, 7, 8, 9

SCHEDULE GENERAL NOTES:

A. DISCONNECT AND CONTROLLER STARTER FURNISHED AND INSTALLED BY:
MFR = MANUFACTURER
EC = ELECTRICAL CONTRACTOR.
MC = FURNISHED BY MECHANICAL CONTRACTOR, INSTALLED BY ELECTRICAL CONTRACTOR.
MFR/EC = FURNISHED LOOSE BY MANUFACTURER INSTALLED BY ELECTRICAL CONTRACTOR....

B. DISCONNECT TYPE:
F = FUSED
NF = NON-FUSED

C. CONTROLLER STARTER TYPE:
FV = FULL VOLTAGE
WYE = WYE-DELTA
SS = SOLID STATE (SOFT START)
MS = MANUAL STARTER
VFD = VARIABLE FREQUENCY DRIVE
VFD/B = VARIABLE FREQUENCY DRIVE WITH BYPASS

D. FAN RPM SHALL NOT EXCEED 110% OF SCHEDULED VALUE, WITH THE SCHEDULED WHEEL TYPE. SUBSTITUTION OF BI OR BIA FANS FOR FC IS ACCEPTABLE IF EFFICIENCY IS NOT LOWER.

E. NO EQUIPMENT SHALL BE SELECTED ABOVE 90% OF MOTOR NAME PLATE RATING.

F. MUST BE WITHIN +/- 10% OF SCHEDULED RPM.

G. CURB TYPE:
MFR = STANDARD CURB BY MANUFACTURER
GC = BY GENERAL CONTRACTOR
SAC = SOUND ATTENUATOR CURB

Key Name

SPLIT SYSTEM UNIT SCHEDULE - RESTAURANT

NOTES:
1. PROVIDE MANUFACTURERS 7-DAY PROGRAMMABLE THERMOSTAT.
2. SINGLE POINT CONNECTION INDOOR UNIT IS POWERED FROM THE OUTDOOR UNIT.
3. PROVIDE LOW AMBIENT KIT.
4. PROVIDE WIND BAFFLE.

TAG NAME	AREA SERVED	INDOOR UNIT								OUTDOOR UNIT							ELECTRICAL						MANUFACTURER	NOTES
		CFM	COOLING MBH	HEATING MBH	MAX. DIMENSIONS LENGTH	MAX. DIMENSIONS WIDTH	HEIGHT	WEIGHT	MODEL	SEER	MAX. DIMENSIONS HEIGHT	LENGTH	WIDTH	WEIGHT	MODEL	VOLTAGE	PHASE	MCA	MOCP	DISCONNECT BY (NOTE A)	DISCONNECT TYPE (NOTE B)		
SS-IT	I.T. ROOM	600	18	20	9.125	31.5	11.625	27	RAV-SM182KRTP-UL	23.8	1'-9 3/4"	11 3/8"	2'-6 3/4"	106	RAV-SP182AT2P-UL	208	1	14.0	25	EC	F	CARRIER	1, 2, 3, 4
SS-R8	ELECTRICAL ROOM	600	18	20	9.125	31.5	11.625	27	RAV-SM182KRTP-UL	23.8	1'-9 3/4"	11 3/8"	2'-6 3/4"	106	RAV-SP182AT2P-UL	208	1	14.0	25	EC	F	CARRIER	1, 2, 3, 4

MAKE-UP AIR UNIT SCHEDULE - RESTAURANT

NOTES:
1. PROVIDE MOTOR WITH THERMAL OVERLOADS.
2. DOWN DISCHARGE.
3. PROVIDE 14" MANUFACTURERS ROOF CURB.
4. PROVIDE DISCONNECT SWITCH.
5. PROVIDE UNIT MOUNTED VFD.
6. SINGLE POINT POWER CONNECTION.
7. PROVIDE BACKDRAFT DAMPER.
8. LOW AMBIENT KIT.
9. REFER TO CAPTIVEAIRE DRAWINGS (INCLUDED IN SET) FOR ADDITIONAL INFORMATION.

TAG NAME	AREA SERVED	CFM	FAN RPM (NOTE D)	EXT. S.P. IN. W.C.	DX COOLING E.A.T. DB °F	E.A.T. WB °F	L.A.T. DB °F	L.A.T. WB °F	SENSIBLE MBH	TOTAL MBH	ELECTRICAL MCA	MOCP	FLA	BHP (NOTE E)	MHP (NOTE E)	VOLTAGE	PHASES	DISCONNECT BY (NOTE A)	DISCONNECT TYPE (NOTE B)	LENGTH	WIDTH	HEIGHT	WEIGHT	MANUFACTURER	MODEL	NOTES
MAU-1	KITCHEN	5630	1454	0.75	92	60	73.7	53.7	88.5	88.5	62.4 A	80 A	55.9 A	4.73	7.5	208	3	EC	FU	205 1/4	35 3/8	56 3/8	1878	CAPTIVEAIRE	A3-D.500-24D-MPU	1, 2, 3, 4, 5, 6, 7, 8, 9

AIR TERMINAL SCHEDULE - RESTAURANT

NOTES:
1. CONTRACTOR SHALL DETERMINE PROPER BORDER TYPE TO MATCH CEILING CONSTRUCTION.
2. REFER TO DRAWINGS FOR NECK SIZE. ALL BRANCH DUCTWORK TO AIR TERMINALS SHALL BE NECK SIZE UNLESS NOTED OTHERWISE.
3. CONTRACTOR SHALL COORDINATE COLOR, FINISH AND EXACT LOCATION WITH ARCHITECT PRIOR TO ORDERING AND INSTALLING.
4. PROVIDE FULL SIZE INTERNALLY LINED SUPPLY PLENUM.
5. PROVIDE OPPOSED BLADE DAMPER UNLESS INDICATES OTHERWISE.

TAG NAME	FACE SIZE (IN.)	TYPE	BORDER	MATERIAL	FINISH	MANUFACTURER	MODEL	NOTES
EG-1	INLET +2	35 DEGREE DEFLECTION	SURFACE	STEEL	WHITE	TITUS	350RL	1, 2, 3, 5
RG-1	INLET +2	35 DEGREE DEFLECTION	SURFACE	STEEL	WHITE	TITUS	350R	1, 2, 3
RG-2	24x24	35 DEGREE DEFLECTION	LAY-IN	STEEL	WHITE	TITUS	350RL	1, 2, 3
RR-1	INLET +2	35 DEGREE DEFLECTION	SURFACE	STEEL	WHITE	TITUS	350RL	1, 2, 3
RR-2	INLET +2	35 DEGREE DEFLECTION	SURFACE	ALUMINUM	WHITE	TITUS	CT-580	1, 2, 3
SD-1	INLET + 6	LOUVER FACE	SURFACE	STEEL	WHITE	TITUS	TDC	1, 2, 3, 5
SD-2	24x24	3 - CONE	LAY-IN	STEEL	WHITE	TITUS	TMS	1, 2, 3
SR-1	INLET +2	SINGLE DEFLECTION	SURFACE	ALUMINUM	WHITE	TITUS	CT-580	1, 2, 3, 5
SR-2	INLET +2	DOUBLE DEFLECTION	SURFACE	STEEL	WHITE	TITUS	300RS	1, 2, 3, 5
SR-3	INLET +2	SINGLE DEFLECTION	SURFACE	ALUMINUM	WHITE	TITUS	CT-580	1, 2, 3, 4

EXHAUST FAN SCHEDULE - KITCHEN - RESTAURANT

NOTES:
1. UL705 LISTED
2. UL705 AND UL762 LISTED.
3. PROVIDE DIRECT DRIVE CONSTUCTION (NO BELTS/PULLYS).
4. PROVIDE VARIABLE SPEED CONTROL.
5. PROVIDE MOTOR WITH THERMAL OVERLOADS.
6. PROVIDE DISCONNECT SWITCH.
7. PROVIDE VENTED , 20 GUAGE STEEL ROOF CURB.
8. PROVIDE GREASE BOX.
9. PROVIDE FAN BASE CERAMIC SEAL FACTORY INSTALLED.
10. PROVIDE ECM WIRING PACKAGE.
11. PROVIDE BACKDRAFT DAMPER.
12. PROVIDE BIRD SCREEN.
13. REFER TO CAPTIVEAIRE DRAWINGS (INCLUDED IN SET) FOR ADDITIONAL INFORMATION.

TAG NAME	AREA SERVED	FAN TYPE	FAN CFM	FAN ESP	FAN RPM	ELECTRICAL BHP	HP	FLA	VOLTAGE	PHASE	OPERATING WEIGHT (LBS)	MANUFACTURER	MODEL	NOTES
KEF-1	KITCHEN	UPBLAST	2550	2.2	1493	1.996	3	9.5 A	208	3	189	COOK	ACRUD	2, 3, 4, 5, 6, 7, 8, 9, 13
KEF-2	KITCHEN	UPBLAST	4500	2.4	1142	3.72	5	15.8 A	208	3	313	COOK	ACRUD	2, 3, 4, 5, 6, 7, 8, 9, 13
KEF-3	WASH	UPBLAST	1050	1	1251	0.321	0.75	8.9 A	115	1	88	CAPTIVEAIRE	DU-HFA	1, 3, 4, 5, 6, 10, 11, 12, 13

AIR BALANCE - RESTAURANT:

BUILDING:
NORMAL OPERATION:
(MIN. OUTSIDE AIR)

RTU'S (OUTSIDE AIR)	=	+3,000 CFM
MAU-1 (OUTSIDE AIR)	=	+5,630 CFM
EXHAUST GENERAL	=	- 670 CFM
EXHAUST KITCHEN	=	- 8,100 CFM
RTU'S (EXHAUST AIR)	=	- 0 CFM
TOTAL:	=	+ 360 CFM (10% POSITIVE)

BUILDING:
NORMAL OPERATION:
(MAX. OUTSIDE AIR)

RTU'S (OUTSIDE AIR)	=	+6,700 CFM
MAU-1 (OUTSIDE AIR)	=	+5,630 CFM
EXHAUST GENERAL	=	- 670 CFM
EXHAUST KITCHEN	=	- 8,100 CFM
RTU'S (EXHAUST AIR)	=	- 3,200 CFM
TOTAL:	=	+ 360 CFM (10% POSITIVE)

BUILDING:
ECONOMIZER OPERATION:

RTU'S (OUTSIDE AIR)	=	+22,220 CFM
MAU-1 (OUTSIDE AIR)	=	+ 5,630 CFM
EXHAUST GENERAL	=	- 670 CFM
EXHAUST KITCHEN	=	- 8,100 CFM
RTU'S (EXHAUST AIR)	=	- 18,720 CFM
TOTAL:	=	+ 360 CFM (10% POSITIVE)

KITCHEN:

KEF-1 EXHAUST AIR	=	-2,550 CFM
KEF-2 EXHAUST AIR	=	-4,500 CFM
KEF-3 EXHAUST AIR	=	-1,050 CFM
MAU-1 OUTSIDE AIR	=	+5,630 CFM
RTU'S OUTSIDE AIR	=	+1,020 CFM
GENERAL EXHAUST	=	- 180 CFM
TRANSFER AIR	=	+1,260 CFM
TOTAL:	=	-370 CFM (15% NEGATIVE)

DCV, ECONOMIZER AND POWER EXHAUST SEQUENCE OF OPERATION: (RTU-R1A, RTU-R1B, RTU-R1C, AND RTU-5)

CONTRACTOR IS TO PROVIDE INSTALL AND FULLY COMMISSION ECONOMIZER AND POWER EXHAUST PER MANUFACTURER'S REQUIREMENTS.

DEMAND CONTROL VENTILATION: SYSTEM SHALL HAVE THE CAPABILITY OF MONITORING CO2 LEVELS AND SHALL BE CONFIGURED TO PROVIDE THE MINIMUM VENTILATION RATE DURING ALL OCCUPIED HOURS. VENTILATION MUST BE MAINTAINED THAT WILL RESULT IN A CONCENTRATION OF CO2 AT OR BELOW 600 PPM ABOVE AMBIENT LEVEL. UPON DETECTION OF 600 PPM CONCENTRATION OF CO2 THE OUTSIDE AIR DAMPER WILL MODULATE OPEN AND CLOSED BETWEEN THE MINIMUM AND THE MAXIMUM VENTILATION RATES (REFERENCED ABOVE) LINEARLY WHEN DETECTED CO2 LEVELS IN THE SPACE ARE ABOVE 600 PPM OVER OUTDOOR AMBIENT CO2 LEVELS.

THE DAMPER CAN BE CLOSED DURING UNOCCUPIED HOURS.

ECONOMIZER CONTROL: THE CO2 SENSOR SHOULD PROVIDE CONTROL TO THE AIR HANDLER OUTSIDE AIR DAMPER WHENEVER THE FRESH AIR ECONOMIZER CANNOT BE USED. THE ECONOMIZER SHALL HAVE PRIORITY AND BE ENABLED WHEN THERE IS A DEMAND FOR COOLING AND THE OUTDOOR AMBIENT TEMPERATURE IS 65°F OR BELOW. ECONOMIZER SHALL BE INTEGRATED AND PROVIDE PARTIAL TO FULL COOLING IN COMBINATION WITH THE COOLING CIRCUIT AS REQUIRED TO MEET COOLING LOAD.

MODULATING POWER EXHAUST: SYSTEM SHALL BE SET TO MAINTAIN MAXIMUM 0.03 IN. WG. POSITIVE PRESSURE BETWEEN MINIMUM OUTSIDE AIR CFM AND FULL ECONOMIZER MODE CFM.

ECONOMIZER AND POWER EXHAUST SEQUENCE OF OPERATION: (RTU-4)

CONTRACTOR IS TO PROVIDE INSTALL AND FULLY COMMISSION ECONOMIZER AND POWER EXHAUST PER MANUFACTURER'S REQUIREMENTS.

THE DAMPER CAN BE CLOSED DURING UNOCCUPIED HOURS.

ECONOMIZER CONTROL: THE ECONOMIZER SHALL BE ENABLED WHEN THERE IS A DEMAND FOR COOLING AND THE OUTDOOR AMBIENT TEMPERATURE IS 65°F OR BELOW. ECONOMIZER SHALL BE INTEGRATED AND PROVIDE PARTIAL TO FULL COOLING IN COMBINATION WITH THE COOLING CIRCUIT AS REQUIRED TO MEET COOLING LOAD.

MODULATING POWER EXHAUST: SYSTEM SHALL BE SET TO MAINTAIN MAXIMUM -0.03 IN. WG. NEGATIVE PRESSURE BETWEEN MINIMUM OUTSIDE AIR CFM AND FULL ECONOMIZER MODE CFM IN THE KITCHEN.

EXHAUST FAN SCHEDULE - RESTAURANT

NOTES:
1. PROVIDE MOTOR WITH THERMAL OVERLOADS.
2. PROVIDE DISCONNECT SWITCH.
3. PROVIDE BACKDRAFT DAMPER.
4. PROVIDE UNIT MOUNTED SPEED CONTROLLER.
5. CONTROLLED VIA TIMECLOCK (COORDINATE WITH ELECTRICAL). EXHAUST FAN SHALL OPERATE CONTINUOUSLY DURING OCCUPIED HOURS.

TAG NAME	AREA SERVED	FAN TYPE	FAN CFM	FAN ESP	FAN RPM	ELECTRICAL BHP	HP	FLA	VOLTAGE	PHASE	OPERATING WEIGHT (LBS)	MANUFACTURER	MODEL	NOTES
EF-R1	PUBLIC REST.	DOWN BLAST	400	0.34	1550	0.06	0.085	0 A	115	1	50	GREENHECK	G-095-D	1, 2, 3, 4, 5
EF-R2	JANITORIAL	CEILING	90	0.38	758	0.01	0.014	0.5 A	115	1	24	GREENHECK	SP-A200	1, 2, 3, 4, 5
EF-R3	EMPLYEE REST.	CEILING	90	0.38	758	0.01	0.014	0.5 A	115	1	24	GREENHECK	SP-A200	1, 2, 3, 4, 5
EF-R4	JANITORIAL	CEILING	90	0.38	758	0.01	0.014	0.5 A	115	1	24	GREENHECK	SP-A200	1, 2, 3, 4, 5

UNIT HEATER SCHEDULE - ELECTRIC - RESTAURANT

1. PROVIDE WALL MOUNTING KIT.
2. UNIT FURNISHED WITH BUILT-IN THERMOSTAT.
3. PROVIDE TW0-SPEED SUPPLY FAN MOTOR.
4. PROVIDE BOTTOM INTAKE AND TOP DISCHARGE.

TAG NAME	AREA SERVED	CONFIGURATION	CFM	HP	RPM	HEATING ELEMENT STAGES	HEATING ELEMENT KW	ELECTRICAL VOLTAGE	PHASES	FLA	DISCONNECT BY (NOTE A)	DISCONNECT TYPE (NOTE B)	MAX. DIMENSIONS LENGTH	WIDTH	HEIGHT	WEIGHT	MANUFACTURER	MODEL	NOTES
UH R1	VESTIBULE #1	WALL MOUNTED	230	0.01	1400	1	3	208	1	15.4	EC	F	33"	9"	25"	100	MARKEL	6333A	1, 2, 3, 4
UH R2	VESTIBULE #2	WALL MOUNTED	230	0.01	1400	1	3	208	1	15.4	EC	F	33"	9"	25"	100	MARKEL	6333A	1, 2, 3, 4

ECONOMIZER / POWERED EXHAUST SCHEDULE - RESTAURANT

1. PROVIDE MOTOR WITH THERMAL OVERLOADS.
2. PROVIDE POWER EXHAUST ECONOMIZER WITH THE SLIDE-IN ECONOMIZER AND POWER EXHAUST MODULE, SHIPPED FROM FACTORY AS A COMPLETELY ASSEMBLED ECONOMIZER AND POWER EXHAUST HOOD.
3. PROVIDE BLOWER MOTOR WITH AUTOMATIC INTERNAL THERMAL PROTECTION, ADJUSTABLE PULLEY, RUBBER ISOLATORS, PRELUBRICATED BALL BEARINGS, AND DYNAMICALLY BALANCED WHEEL.
4. PROVIDE ELECTRICAL COMPONENTS ISOLATED FROM THE AIR STREAM IN AN ELECTRICAL BOX.
5. PROVIDE SEPARATE POWER CONNECTION FOR ECONOMIZER/POWER EXHAUST UNIT (COORDINATE WITH ELECTRICAL).
6. ECONOMIZERS SHALL MEET OR EXCEED LEAK RATE OF 4 CFM PER SQ. FT. PER AMCA 500D.
7. PROVIDE MICROMETL ENTHALPY 100% ECONOMIZER/EXHAUST WITH FULLY MODULATING CENTRIFUGAL 0-100% POWERED EXHAUST WITH INTEGRAL VFD, PRESSURE TRANSDUCER, PRESSURE TUBING. MECHANICAL CONTRACTOR TO PROVIDE COAXIAL TYPE COVER PLATE THAT IS LOCATED IN THE SPACE WHERE TUBING WOULD TERMINATE. POWERED EXHAUST REQUIRES A DEDICATED ELECTRICAL CONNECTION AND DISCONNECT (COORDINATE WITH ELECTRICAL).

TAG NAME	AREA SERVED	CFM	S.P. IN. W.C.	ELECTRICAL MHP (NOTE E)	MCA	MOCP	VOLTAGE	PHASES	DISCONNECT BY (NOTE A)	DISCONNECT TYPE (NOTE B)	MANUFACTURER	MODEL	NOTES
PE-R1A	BALLROOM	4000	0.75	2	11.9 A	21.4 A	208	3	EC	F	MICROMETL	PCD-SRT05CA	1, 2, 3, 4, 5, 6, 7
PE-R1B	BALLROOM	3000	0.75	1	8 A	14.4 A	208	3	EC	F	MICROMETL	PCD-SRT05CA	1, 2, 3, 4, 5, 6, 7
PE-R1C	BALLROOM	5000	0.75	3	17 A	30.6 A	208	3	EC	F	MICROMETL	PCD-SRT05CA	1, 2, 3, 4, 5, 6, 7
PE-R4	KITCHEN	5000	0.75	3	17 A	30.6 A	208	3	EC	F	MICROMETL	PCD-SRT05CA	1, 2, 3, 4, 5, 6, 7
PE-R5	DINING	4000	0.75	2	11.9 A	21.4 A	208	3	EC	F	MICROMETL	PCD-SRT05CA	1, 2, 3, 4, 5, 6, 7

IMEG
9000 E PIMA CENTER PARKWAY
SUITE 320
SCOTTSDALE, AZ 85258
P: 480.222.3771
www.imegcorp.com

IMEG CORP. RESERVES PROPRIETARY RIGHTS, INCLUDING COPYRIGHTS, TO THIS DRAWING AND THE DATA SHOWN THEREON. SAID DRAWING AND/OR DATA ARE THE EXCLUSIVE PROPERTY OF IMEG CORP. AND SHALL NOT BE USED OR REPRODUCED FOR ANY OTHER PROJECT WITHOUT THE EXPRESS WRITTEN APPROVAL AND PARTICIPATION OF IMEG CORP. ©2023 IMEG CORP.

0 1 2 3
REF. SCALE IN INCHES
PROJECT #23002327.00

STAMP

BENJAMIN W. YEUNG
NEW MEXICO
21802
LICENSED PROFESSIONAL ENGINEER
11.03.2023

DYRON MURPHY ARCHITECTS, P.C.
4505 Montbel Place NE, Albuquerque, New Mexico 87107

SHIPROCK PINNACLE HOTEL & RESTAURANT

SHIPROCK, NEW MEXICO

100% CONSTRUCTION DOCUMENTS

ISSUED FOR CONSTRUCTION

NOVEMBER 3, 2023

PROJECT NUMBER	DRAWN BY	PROJ MGR
2022.10	IMEG	IMEG

MECHANICAL SCHEDULES

Sheet Title

Sheet Number

of

M602

11/2/2023 3:35:48 PM Autodesk Docs://23002327.00 - Shiprock Pinnacle Hotel & Restaurant/MEP/2_23002327.00_Shiprock Pinnacle Restaurant_C.rvt
DYRON MURPHY ARCHITECTS, P.C.

COM*check* Software Version COMcheckWeb

Mechanical Compliance Certificate

Project Information

Energy Code: 2018 IECC
Project Title: SHIPROCK rest
Location: Shiprock, New Mexico
Climate Zone: 5b
Project Type: New Construction

Construction Site: Owner/Agent: Designer/Contractor:

Additional Efficiency Package(s)

Credits: 1.0 Required 0.0 Proposed

Mechanical Systems List

Quantity System Type & Description

1 RTU-R1A (Single Zone):
Single Package Heat Pump
Heating Mode: Capacity = 55 kBtu/h,
Proposed Efficiency = 3.40 COP, Required Efficiency = 3.30 COP
Cooling Mode: Capacity = 120 kBtu/h, , Air Economizer
Proposed Efficiency = 11.00 EER, Required Efficiency = 11.00 EER
Proposed Part Load Efficiency = 15.00 IEER, Required Part Load Efficiency = 12.00 IEER
Fan System: FAN SYSTEM 1 -- Compliance (Motor nameplate HP and fan efficiency method) : Passes

Fans:
FAN 1 Supply, Constant Volume, 4000 CFM, 2.0 motor nameplate hp, 0.0 fan efficiency grade, 0.0 total fan efficiency, 0.0 design fan efficiency , fan exception: Single fan <= 5HP

1 RTU-R1B (Single Zone):
Single Package Heat Pump
Heating Mode: Capacity = 36 kBtu/h,
Proposed Efficiency = 3.40 COP, Required Efficiency = 3.30 COP
Cooling Mode: Capacity = 96 kBtu/h, , Air Economizer
Proposed Efficiency = 11.20 EER, Required Efficiency = 11.00 EER
Proposed Part Load Efficiency = 15.00 IEER, Required Part Load Efficiency = 12.00 IEER
Fan System: FAN SYSTEM 3 -- Compliance (Motor nameplate HP and fan efficiency method) : Passes

Fans:
FAN 2 Supply, Constant Volume, 3000 CFM, 1.1 motor nameplate hp, 0.0 fan efficiency grade, 0.0 total fan efficiency, 0.0 design fan efficiency , fan exception: Single fan <= 5HP

1 RTU-R1C (Single Zone):
Single Package Heat Pump
Heating Mode: Capacity = 55 kBtu/h,
Proposed Efficiency = 3.30 COP, Required Efficiency = 3.20 COP
Cooling Mode: Capacity = 156 kBtu/h, , Air Economizer
Proposed Efficiency = 10.60 EER, Required Efficiency = 10.60 EER
Proposed Part Load Efficiency = 15.00 IEER, Required Part Load Efficiency = 11.60 IEER
Fan System: FAN SYSTEM 4 -- Compliance (Motor nameplate HP and fan efficiency method) : Passes

Fans:
FAN 3 Supply, Constant Volume, 5000 CFM, 2.1 motor nameplate hp, 0.0 fan efficiency grade, 0.0 total fan efficiency, 0.0 design fan efficiency , fan exception: Single fan <= 5HP

1 RTU-R2 (Single Zone):
Single Package Heat Pump
Heating Mode: Capacity = 13 kBtu/h,
Proposed Efficiency = 8.80 HSPF, Required Efficiency = 8.00 HSPF
Cooling Mode: Capacity = 36 kBtu/h,
Proposed Efficiency = 17.00 SEER, Required Efficiency = 14.00 SEER
Proposed Part Load Efficiency = 0.00 , Required Part Load Efficiency = 0.00
Fan System: FAN SYSTEM 5 -- Compliance (Motor nameplate HP and fan efficiency method) : Passes

Fans:
FAN 4 Supply, Constant Volume, 1200 CFM, 0.4 motor nameplate hp, 0.0 fan efficiency grade, 0.0 total fan efficiency, 0.0 design fan efficiency , fan exception: Single fan <= 5HP

1 RTU-R3 (Single Zone):
Single Package Heat Pump
Heating Mode: Capacity = 12 kBtu/h,
Proposed Efficiency = 8.80 HSPF, Required Efficiency = 8.00 HSPF
Cooling Mode: Capacity = 36 kBtu/h,
Proposed Efficiency = 17.00 SEER, Required Efficiency = 14.00 SEER
Proposed Part Load Efficiency = 0.00 , Required Part Load Efficiency = 0.00
Fan System: FAN SYSTEM 5 -- Compliance (Motor nameplate HP and fan efficiency method) : Passes

Fans:
FAN 4 Supply, Constant Volume, 1200 CFM, 0.4 motor nameplate hp, 0.0 fan efficiency grade, 0.0 total fan efficiency, 0.0 design fan efficiency , fan exception: Single fan <= 5HP

1 RTU-R4 (Single Zone):
Single Package Heat Pump
Heating Mode: Capacity = 48 kBtu/h,
Proposed Efficiency = 3.30 COP, Required Efficiency = 3.20 COP
Cooling Mode: Capacity = 156 kBtu/h, , Air Economizer
Proposed Efficiency = 10.60 EER, Required Efficiency = 10.60 EER
Proposed Part Load Efficiency = 15.00 IEER, Required Part Load Efficiency = 11.60 IEER
Fan System: FAN SYSTEM 6 -- Compliance (Motor nameplate HP and fan efficiency method) : Passes

Fans:
FAN 5 Supply, Constant Volume, 5000 CFM, 2.1 motor nameplate hp, 0.0 fan efficiency grade, 0.0 total fan efficiency, 0.0 design fan efficiency , fan exception: Single fan <= 5HP

1 RTU-R5 (Single Zone):
Single Package Heat Pump
Heating Mode: Capacity = 48 kBtu/h,
Proposed Efficiency = 3.40 COP, Required Efficiency = 3.30 COP
Cooling Mode: Capacity = 120 kBtu/h, , Air Economizer
Proposed Efficiency = 11.00 EER, Required Efficiency = 11.00 EER
Proposed Part Load Efficiency = 15.00 IEER, Required Part Load Efficiency = 12.00 IEER
Fan System: FAN SYSTEM 7 -- Compliance (Motor nameplate HP and fan efficiency method) : Passes

Fans:
FAN 6 Supply, Constant Volume, 3000 CFM, 1.2 motor nameplate hp, 0.0 fan efficiency grade, 0.0 total fan efficiency, 0.0 design fan efficiency , fan exception: Single fan <= 5HP

1 RTU-R6 (Single Zone):
Single Package Heat Pump
Heating Mode: Capacity = 18 kBtu/h,
Proposed Efficiency = 8.70 HSPF, Required Efficiency = 8.00 HSPF
Cooling Mode: Capacity = 48 kBtu/h,
Proposed Efficiency = 17.00 SEER, Required Efficiency = 14.00 SEER
Proposed Part Load Efficiency = 0.00 , Required Part Load Efficiency = 0.00
Fan System: FAN SYSTEM 8 -- Compliance (Motor nameplate HP and fan efficiency method) : Passes

Fans:
FAN 7 Supply, Constant Volume, 1600 CFM, 0.7 motor nameplate hp, 0.0 fan efficiency grade, 0.0 total fan efficiency, 0.0 design fan efficiency , fan exception: Single fan <= 5HP

1 RTU-R7 (Single Zone):
Single Package Heat Pump
Heating Mode: Capacity = 14 kBtu/h,
Proposed Efficiency = 8.80 HSPF, Required Efficiency = 8.00 HSPF
Cooling Mode: Capacity = 36 kBtu/h,
Proposed Efficiency = 17.00 SEER, Required Efficiency = 14.00 SEER
Proposed Part Load Efficiency = 0.00 , Required Part Load Efficiency = 0.00
Fan System: FAN SYSTEM 9 -- Compliance (Motor nameplate HP and fan efficiency method) : Passes

Fans:
FAN 8 Supply, Constant Volume, 1200 CFM, 0.4 motor nameplate hp, 0.0 fan efficiency grade, 0.0 total fan efficiency, 0.0 design fan efficiency , fan exception: Single fan <= 5HP

Mechanical Compliance Statement

Compliance Statement: The proposed mechanical design represented in this document is consistent with the building plans, specifications, and other calculations submitted with this permit application. The proposed mechanical systems have been designed to meet the 2018 IECC requirements in COMcheck Version COMcheckWeb and to comply with any applicable mandatory requirements listed in the Inspection Checklist.

VENTILATION CALCULATION (UMC_2021)

SPACE NAME [N/A]	SPACE AREA [SQFT]	OCCUPANT DENSITY [#/1000 SQFT]	CALCULATED OCCUPANTS	FIXED SEATS	USE OCCUPANCY	OUTDOOR AIR (Rp) [CFM/Person]	OUTDOOR AIR (Ra) [CFM/SQFT]	EXHAUST AIR [CFM/SQFT]	DISTRIBUTION EFFECTIVENESS [N/A]	PLUMBING FIXTURE COUNT [N/A]	FIXTURE EXHAUST AIR [CFM/Fixture]	REQUIRED OUTDOOR AIR [CFM]	USE OUTDOOR AIR [CFM]	USE EXHAUST AIR [CFM]
RTU-1A														
Ballroom	1363	120.0	163.6		163.6	5.0	0.06	0.0	0.8			1125	1130	0
											Total	1125	1130	0
RTU-1B														
Ballroom	1023	120.0	122.7		122.7	5.0	0.06	0.0	0.8			844	850	0
											Total	844	850	0
RTU-1C														
Ballroom	1704	120.0	204.5		204.5	5.0	0.06	0.0	0.8			1406	1410	0
											Total	1406	1410	0
RTU-2														
Corridor #2	683	0.0	0.0		0.0	0.0	0.06	0.0	0.8			51	60	0
Linen Storage	157	0.0	0.0		0.0	0.0	0.00	0.0	0.8			0	0	0
Chair/Table Storage	218	0.0	0.0		0.0	0.0	0.00	0.0	0.8			0	0	0
Break Room	216	50.0	10.8		10.8	5.0	0.06	0.0	0.8			84	90	0
General Storage	150	0.0	0.0		0.0	0.0	0.00	0.0	0.8			0	0	0
Office #2	62	5.0	0.3		0.3	5.0	0.06	0.0	0.8			7	10	0
Janitorial #2	41	0.0	0.0		0.0	0.0	0.00	0.0	0.8	1	90	0	0	90
											Total	142	320	90
RTU-3														
Employee Restroom	51	0.0	0.0		0.0	0.0	0.00	0.0	0.8	1	90	0	0	90
Mechanical	205	0.0	0.0		0.0	0.0	0.00	0.0	0.8			0	0	0
Dry Storage	134	0.0	0.0		0.0	0.0	0.00	0.0	0.8			0	0	0
Janitorial #1	83	0.0	0.0		0.0	0.0	0.00	0.0	0.8	1	90	0	0	90
Office #1	70	5.0	0.4		0.4	5.0	0.06	0.0	0.8			7	10	0
Corridor #3	167	0.0	0.0		0.0	0.0	0.06	0.0	0.8			13	20	0
											Total	20	300	180
RTU-4														
Kitchen	1412	20.0	28.2		28.2	7.5	0.12	0.7	0.8			477	480	2470
											Total	477	500	2470
RTU-5														
Restaurant	1800	70.0	126.0		126.0	7.5	0.18	0.0	0.8			1586	1590	0
											Total	1586	1590	0
RTU-6														
Boardroom	526	50.0	26.3		26.3	5.0	0.06	0.0	0.8			204	210	0
											Total	204	300	0
RTU-7														
Vestibule #1	68		0.0		0.0	0.0	0.00	0.0	0.8			0	0	0
Vestibule #2	72	0.0	0.0		0.0	0.0	0.00	0.0	0.8			0	0	0
Corridor #1	944	0.0	0.0		0.0	0.0	0.06	0.0	0.8			71	80	0
Men's	249	0.0	0.0		0.0	0.0	0.00	0.0	0.8	4	65	0	0	200
Women's	259	0.0	0.0		0.0	0.0	0.00	0.0	0.8	4	65	0	0	200
Waiting Area	98	30.0	2.9		2.9	7.5	0.06	0.0	0.8			35	40	0
Vestibule #3	84	0.0	0.0		0.0	0.0	0.00	0.0	0.8			0	0	0
											Total	106	300	400

IMEG
9000 E PIMA CENTER PARKWAY
SUITE 320
SCOTTSDALE, AZ 85258
P. 480.222.3771
www.imegcorp.com

IMEG CORP. RESERVES PROPRIETARY RIGHTS, INCLUDING COPYRIGHTS, TO THIS DRAWING AND THE DATA SHOWN THEREON. SAID DRAWING AND/OR DATA ARE THE EXCLUSIVE PROPERTY OF IMEG CORP. AND SHALL NOT BE USED OR REPRODUCED FOR ANY OTHER PROJECT WITHOUT THE EXPRESS WRITTEN APPROVAL AND PARTICIPATION OF IMEG CORP. ©2023 IMEG CORP.

0 1 2 3
REF. SCALE IN INCHES PROJECT #23002327.00

STAMP

BENJAMIN W. YEUNG
NEW MEXICO
LICENSED PROFESSIONAL ENGINEER

11.03.2023

DYRON MURPHY ARCHITECTS, P.C.

4505 Montbel Place NE, Albuquerque, New Mexico 87107

SHIPROCK PINNACLE HOTEL & RESTAURANT

SHIPROCK, NEW MEXICO

100% CONSTRUCTION DOCUMENTS

ISSUED FOR CONSTRUCTION

NOVEMBER 3, 2023

PROJECT NUMBER	DRAWN BY	PROJ MGR
2022.10	IMEG	IMEG

MECHANICAL SCHEDULES

Sheet Title

Sheet Number of

M603

11/2/2023 3:30:48 PM Autodesk Docs://23002327.00 - Shiprock Pinnacle Hotel & Restaurant/MEP22_23002327.00_Shiprock Pinnacle Restaurant_C.rvt
DYRON MURPHY ARCHITECTS, P.C.

ELECTRICAL SYMBOL LIST

SYMBOL:	TAG:	SPEC SECTION:	DESCRIPTION:
GB	GB	26 05 26	GROUND BUS
IBT	IBT	26 05 26	INTERSYSTEM BONDING TERMINATION
E	ECONN	26 05 33	ELECTRICAL CONNECTION
J	JB	26 05 33	JUNCTION BOX
	FB-# or PT-#	26 27 26	FLOOR BOX or POKE THROUGH
RI	RI-TECH	26 05 33	TECHNOLOGY OUTLET ROUGH-IN
	RI-TECH-C	26 05 33	TECHNOLOGY ROUGH-IN, CEILING
	PANEL '###'	26 24 16	PANELBOARD - RECESS MOUNT
	PANEL '###'	26 24 16	PANELBOARD - SURFACE MOUNT
	MX-#/MS-# /CB-#/CS-#	26 24 19	MANUAL SWITCH / STARTER / COMBINATION STARTER/ CIRCUIT BREAKER. REFER TO DISC/STA SCHEDULE
	IPP-#	26 24 21	ISOLATED POWER PANEL
	TR-#/DTR-#	26 22 00	TRANSFORMER. REFER TO TRANSFORMER SCHEDULE
	DS-#/FDS-#/DSS-#	26 28 16	DISCONNECT. REFER TO DISC/STA SCHEDULE
	MD-SD-#	26 28 16	MOBILE DIAGNOSTICS SERVICE DISCONNECT. REFER TO DISC/STA SCHEDULE
GANN	GANN-#	26 32 13	GENERATOR ANNUNCIATOR PANEL

ELECTRICAL SYMBOL LIST

SYMBOL:	TAG:	SPEC SECTION:	DESCRIPTION:
O	REC-DUP-O	26 27 26	DUPLEX RECEPTACLE CONTROLLED BY OCCUPANCY
O	REC-QUAD-O	26 27 26	QUAD RECEPTACLE CONTROLLED BY OCCUPANCY
	REC-DUP	26 27 26	DUPLEX RECEPTACLE, 125V
	REC-DUP-GFI	26 27 26	DUPLEX GFI RECEPTACLE, 125V
G	REC-DUP-GFI-R	26 27 26	GROUND FAULT DEVICE
W	REC-DUP-WP	26 27 26	DUPLEX GFI WEATHERPROOF RECEPTACLE 125V
X	REC-DUP-XP	26 27 26	DUPLEX RECEPTACLE, EXPLOSION PROOF, 125V
	REC-ISO	26 27 26	ISOLATED GROUND RECEPTACLE, 125V
S	REC-ISO-SUR	26 27 26	ISOLATED GROUND RECEPTACLE WITH SURGE SUPPRESSION, 125V
S	REC-ISO-SUR-QUAD	26 27 26	ISOLATED GROUND QUAD RECEPTACLE WITH SURGE SUPPRESSION, 125V
U	REC-USB	26 27 26	DUPLEX RECEPTACLE, USB CHARGING
	REC-ARC	26 27 26	ARC FAULT CIRCUIT INTERRUPTER RECEPT 125V
AF	REC-AFGF	26 27 26	REC AFCI, GFCI, TAMPER RESISTANT
	REC-SIM-520R	26 27 26	SIMPLEX RECEPTACLE, 125V
	REC-SIM-530R	26 27 26	RECEPTACLE, 125V
	REC-SIM-550R	26 27 26	RECEPTACLE 125V, 50A, 125V
	REC-SIM-615R	26 27 26	RECEPTACLE, 6-15R, 250V
	REC-SIM-630R	26 27 26	RECEPTACLE, 6-30R, 250V
	REC-SIM-650R	26 27 26	RECEPTACLE, 6-50R, 250V
	REC-SIM-720R	26 27 26	RECEPTACLE, 7-20R, 277V
	REC-SIM-730R	26 27 26	RECEPTACLE, 7-30R, 277V
	REC-SIM-750R	26 27 26	RECEPTACLE, 7-50R, 277V
	REC-SIM-1420R	26 27 26	RECEPTACLE, 14-20R, 125/250V
	REC-SIM-1430R	26 27 26	RECEPTACLE, 14-30R, 125/250V
	REC-SIM-1450R	26 27 26	RECEPTACLE, 14-50R, 125/250V
	REC-SIM-1460R	26 27 26	RECEPTACLE, 14-60R, 125/250V
	REC-SIM-1520R	26 27 26	RECEPTACLE, 15-20R, 250V, 3PH
	REC-SIM-1530R	26 27 26	RECEPTACLE, 15-30R, 250V, 3PH
	REC-SIM-1550R	26 27 26	RECEPTACLE, 15-50R, 250V, 3PH
	REC-SIM-1560R	26 27 26	RECEPTACLE, 15-60R, 250V, 3PH
	REC-SIM-L520R	26 27 26	RECEPTACLE, LOCKING TYPE, L5-20R, 125V
	REC-SIM-L530R	26 27 26	RECEPTACLE, LOCKING TYPE, L5-30R, 125V
	REC-SIM-L620R	26 27 26	RECEPTACLE, LOCKING L6-20R, 250V
	REC-SIM-L630R	26 27 26	RECEPTACLE, LOCKING L6-30R, 250V
	REC-SIM-L720R	26 27 26	RECEPTACLE, LOCKING L7-20R, 277V
	REC-SIM-L730R	26 27 26	RECEPTACLE, LOCKING L7-30R, 277V
	REC-SIM-L1420R	26 27 26	RECEPTACLE, LOCKING L14-20R, 125/250V
	REC-SIM-L1430R	26 27 26	RECEPTACLE, LOCKING L14-30R, 125/250V
	REC-SIM-L1520R	26 27 26	RECEPTACLE, LOCKING L15-20R, 250V, 3PH
	REC-SIM-L1530R	26 27 26	RECEPTACLE, LOCKING L15-30R, 250V, 3PH
	REC-SIM-L1620R	26 27 26	RECEPTACLE, L16-20R, 480V, 3PH
	REC-SIM-L1630R	26 27 26	RECEPTACLE, L16-30R, 480V, 3PH
	REC-SIM-L2120R	26 27 26	RECEPTACLE, LOCKING L21-20R, 120/208V, 3PH
	REC-SIM-L2130R	26 27 26	RECEPTACLE, LOCKING L21-30R, 120/208V, 3PH
X	REC-SIM-XP	26 27 26	RECEPTACLE, EXPLOSION PROOF, 125V
	REC-TAMP	26 27 26	DUPLEX RECEPTACLE, TAMPER RESISTANT, 125V
	REC-TAMP-GFI	26 27 26	GFI DUPLEX RECEPTACLE, TAMPER RESISTANT, 125V
	REC-TAMP-QUAD	26 27 26	QUAD RECEPTACLE, TAMPER RESISTANT, 125V
	REC-QUAD	26 27 26	QUAD RECEPTACLE, 125V
	REC-QUAD-GFI	26 27 26	QUAD GFI RECEPTACLE, 125V
U	REC-QUAD-USB	26 27 26	QUAD RECEPTACLE, USB 125V
W	REC-QUAD-WP	26 27 26	QUAD GFI WEATHERPROOF RECEPTACLE, 125V
	REC-DUP-PED	26 05 33	RECEPTACLE - PEDESTAL STYLE
	REC-PED-QUAD	26 05 33	RECEPTACLE - PEDESTAL STYLE
	REC-Z#	26 27 26	IEC PIN AND SLEEVE RECEPTACLE, 600V
	PP#	26 27 23	POWER POLE

ELECTRICAL SYMBOL LIST

SYMBOL:	TAG:	SPEC SECTION:	DESCRIPTION:
S	SW-1P	26 09 33	SWITCH - SINGLE POLE
S_K	SW-1P-K	26 09 33	SWITCH - SINGLE POLE - KEY LOCK
S_P	SW-1P-PL	26 09 33	SWITCH - PILOT LIGHT
S_2	SW-2P	26 09 33	SWITCH - TWO POLE
S_3	SW-3W	26 09 33	SWITCH - THREE WAY
S_4	SW-4W	26 09 33	SWITCH - FOUR WAY
D	SW-D-20	26 27 26	DIMMER - 2000 WATT
D_O	SW-OD	26 09 33	DIMMER - WALL DIMMER OCCUPANCY SENSOR
LS	SW-LS	26 09 33	DAYLIGHT LEVEL SENSOR
PC	SW-LS-PC	26 09 33	PHOTOCELL
OC_D	SW-OC-D	26 09 33	OCCUPANCY SENSOR - DUAL TECHNOLOGY
OC_D	SW-OC-D-W	26 09 33	OCCUPANCY SENSOR - DUAL TECHNOLOGY - WALL MOUNTED
S_O	SW-OC-P-O	26 09 33	SWITCH - OCCUPANCY SENSOR WALL SWITCH
SW	SW	26 09 33	WALL CONTROL STATION
#B	SW-DCS	26 09 33	DIMMER CONTROL STATION

ELECTRICAL SYMBOL LIST

SYMBOL:	TAG:	SPEC SECTION:	DESCRIPTION:
	REFER TO LUMINAIRE SCHEDULE		LINEAR LUMINAIRES
			TROFFER
			WALL SCONCE LUMINAIRE
			DOWNLIGHT LUMINAIRE
			AIMABLE OR WALL WASH LUMINAIRE
			INDUSTRIAL LUMINAIRE
			WALL BRACKET LUMINAIRE
			POLE MOUNTED LUMINAIRE
			SINGLE FACE EXIT SIGN
			DOUBLE FACE EXIT SIGN
			WALL/CEILING EMERGENCY EXIT SIGN
			EMERGENCY UNIT

ELECTRICAL EQUIPMENT TAGS

TAG:	DESCRIPTION:	RELATED SPECIFICATION
DIM-#	DC DIMMING PANEL	26 09 33
DP-#	DISTRIBUTION PANEL	26 24 16
DR-#	DIMMING RACK	26 09 33
EVCS-#	ELECTRICAL VEHICLE CHARGING STATION	26 27 29
GEN-#	GENERATOR	26 32 13
HH-#	HANDHOLE	26 05 33
HT-#	HEAT TAPE	26 05 17
INV-#	LIGHTING INVERTER	26 52 00
MX-#	MANUAL SWITCH, REFER TO DISCONNECT AND STARTER SCHEDULE	26 24 19
PDU-#	POWER DISTRIBUTION UNIT	26 26 00
R-#	RELAY	26 09 39
SB-#	SWITCHBOARD	26 24 13
UPS-#	UNINTERRUPTIBLE POWER SUPPLY	26 33 53
VFD-#	VARIABLE FREQUENCY DRIVE - REFER TO VFD SCHEDULE	26 29 23

VIEW KEY

NAME — LEVEL NAME
10'-0" — HEIGHT ABOVE PROJECT 0'-0"

1 — INDICATES NOTE USED TO DESCRIBE ADDITIONAL INFORMATION ABOUT WORK REQUIRED, SPECIFIC TO THE SHEET AND/OR DETAIL

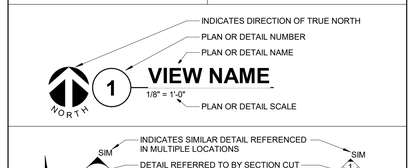

LINE TYPE AND TAG KEY:

NEW WORK BY THIS CONTRACTOR (WIDE LINE)
NEW
EXISTING TO BE REMOVED (SHORT DASHED PATTERN)
NEW UNDERFLOOR OR UNDERGROUND (LONG DASHED PATTERN)

EXISTING TO REMAIN OR WORK BY OTHERS (NARROW LINE)
EXISTING
EXISTING TO BE REMOVED BY OTHERS (SHORT DASHED PATTERN)
EXISTING UNDERFLOOR OR UNDERGROUND (LONG DASHED PATTERN)

HALFTONING DOES NOT MODIFY SCOPE.

'TAG'-E — TAGS WITH DASH 'E' INDICATES THE REFERENCED OBJECT IS EXISTING

TAG — UNDERLINED TAG INDICATES OBJECT IS IN-SCOPE. IF NEW, ADDITIONAL INFORMATION IS AVAILABLE IN A SCHEDULE, MATERIAL LIST, OR SYMBOL LIST

INDICATES AN EXISTING SYSTEM'S POINT OF CONNECTION/REMOVAL

ELECTRICAL ABBREVIATION KEY

ABBR:	DESCRIPTION:
AFF	ABOVE FINISHED FLOOR
C	CONDUIT
GFI	GROUND FAULT INTERRUPTER
N.C.	NORMALLY CLOSED
NIC	NOT IN CONTRACT
N.O.	NORMALLY OPEN
SV	SOLENOID VALVE
TYP	TYPICAL
UON	UNLESS OTHERWISE NOTED

LUMINAIRE SYMBOL KEY

SYMBOL:	DESCRIPTION:
	NORMAL BRANCH LUMINAIRE
	EMERGENCY BRANCH LUMINAIRE

ELECTRICAL SHEET INDEX

E000	ELECTRICAL COVERSHEET
E001	ELECTRICAL SITE PLAN
E101	FIRST & SECOND FLOOR ELECTRICAL LIGHTING PLAN
E102	THIRD & FOURTH FLOOR ELECTRICAL LIGHTING PLAN
E103	FIRST & SECOND FLOOR ELECTRICAL POWER PLAN
E104	THIRD & FOURTH FLOOR ELECTRICAL POWER PLAN
E105	ELECTRICAL LIGHTING PLAN - RESTAURANT
E106	ELECTRICAL POWER PLAN - RESTAURANT
E112	ELECTRICAL ROOF PLAN - HOTEL
E113	ELECTRICAL ROOF PLAN - RESTAURANT
E400	ENLARGED POWER PLAN - RESTAURANT
E401	ELECTRICAL UNIT PLANS
E402	ELECTRICAL UNIT PLANS
E403	ELECTRICAL ENLARGED PLANS
E500	ELECTRICAL RISER DIAGRAM - HOTEL
E501	ELECTRICAL RISER DIAGRAM - RESTAURANT
E502	ELECTRICAL PANEL SCHEDULES - HOTEL
E503	ELECTRICAL PANEL SCHEDULES - HOTEL
E504	ELECTRICAL PANEL SCHEDULES - HOTEL
E505	ELECTRICAL PANEL SCHEDULES - HOTEL
E506	ELECTRICAL PANEL SCHEDULES - RESTAURANT
E507	ELECTRICAL PANEL SCHEDULES - RESTAURANT
E508	ELECTRICAL LIGHTING SCHEDULES - HOTEL
E509	ELECTRICAL LIGHTING SCHEDULES - RESTAURANT
GRAND TOTAL: 24	

TYPICAL NEW CONSTRUCTION:

1. REFER TO SHEET E508 FOR POLE BASE DETAIL.
2. COORDINATE ALL LUMINAIRE LOCATIONS WITH STRUCTURAL TRUSS AND BEAMS PRIOR TO ROUGH-IN.

TYPICAL NEW CONSTRUCTION:

1. SITE HAS UNDERGROUND UTILITIES, STEAM, WATER, ELECTRIC AND VAULTS. POLE LOCATIONS HAVE BEEN COORDINATED WITH CIVIL PLANS. CONTRACTOR SHALL FIELD VERIFY ALL UNDERGROUND UTILITIES PRIOR TO INSTALLING ALL LIGHT POLES. HAND EXCAVATE IF NECESSARY, TO ASCERTAIN EXACT LOCATION OF UNDERGROUND UTILITIES PRIOR TO INSTALLING 'ANY' POLE.
2. WHERE LUMINAIRE QUANTITIES OR LAYOUT DIFFER BETWEEN ELECTRICAL LIGHTING PLANS AND ARCHITECTURAL REFLECTED CEILING PLANS, HIGHER QUANTITY SHALL TAKE PRECEDENCE. CONTRACTOR SHALL CONFIRM QUANTITY AND LAYOUT WITH DESIGN TEAM.
3. #B PUSH BUTTON REFERS TO SCENE QUANTITY. COORDINATE NUMBER OF BUTTONS FOR CONTROL STATIONS WITH LIGHTING CONTROL MANUFACTURER. CONTROL SHALL BE CAPABLE OF DIMMING UP/DOWN AND SWITCHING ON/OFF FOR MULTIPLE ZONES AS INDICATED AND PER LIGHTING SEQUENCE OF OPERATIONS.
4. Z## INDICATES ZONING AND REFLECTS A LIGHTING CONTROL GROUP. PROVIDE RELAYS AS REQUIRED TO ALLOW LUMINAIRES WITHIN THE DEFINED ZONE TO FUNCTION TOGETHER DURING NORMAL POWER.

HOSPITALITY PROJECTS

1. BOXES LOCATED ON OPPOSITE SIDES OF NON-RATED WALLS SHALL BE OFFSET A MINIMUM OF 6" HORIZONTALLY. BOXES ON OPPOSITE SIDES OF FIRE RATED WALLS SHALL BE OFFSET A MINIMUM OF 24" HORIZONTALLY. "THRU-THE-WALL" BOXES SHALL NOT BE ALLOWED WITHOUT PRIOR WRITTEN APPROVAL OF THE ARCHITECT/ENGINEER.
2. ALL RECEPTACLES IN GUEST ROOMS, GYMNASIUMS, OFFICES, AND LOBBIES SHALL BE TAMPER RESISTANT TYPE.
3. ALL CIRCUITS IN DWELLING UNITS AND GUEST ROOMS SHALL BE PROTECTED BY AFCI CIRCUIT BREAKERS.
4. RECEPTACLE OUTLETS IN PUBLIC SPACES SHALL BE DECORATOR TYPE WITH DECORATIVE COVER PLATES.
5. RECEPTACLE OUTLETS IN KITCHENS SHALL BE GFCI TYPE WITH STAINLESS STEEL COVER PLATES OR BE PROTECTED BY GFCI CIRCUIT BREAKER.
6. ALL EQUIPMENT LOCATED UNDER THE KITCHEN HOOD SHALL BE PROTECTED BY SHUNT-TRIP TYPE CIRCUIT BREAKERS.

ELECTRICAL INSTALLATION NOTES:

1. THE COMPLETE INSTALLATION SHALL BE IN ACCORDANCE WITH THE ADA STANDARDS FOR ACCESSIBLE DESIGN. REFER TO THE ADA GUIDELINES FOR ALL CONFIGURATION DETAILS ON THIS PAGE FOR ADDITIONAL INFORMATION.
2. CIRCUIT NUMBERS ARE SHOWN FOR CIRCUIT IDENTIFICATION. CIRCUITING SHALL AGREE WITH NUMBERING ON THE PANEL PROVIDED. COMMON NEUTRALS MAY NOT BE USED FOR BRANCH CIRCUITS. BALANCE THE LOAD ON PANEL AS EVENLY AS POSSIBLE BETWEEN EACH PHASE.
3. FLUSH MOUNT ALL LIGHTING CONTROL DEVICES AT +42" FROM FLOOR (CENTERLINE DIMENSION), EXCEPT WHERE OTHERWISE NOTED. DEVICES MAY BE SURFACE MOUNTED WHEN CONDUIT IS SPECIFIED EXPOSED.
4. FLUSH MOUNT ALL DUPLEX RECEPTACLES AND TECHNOLOGY OUTLETS AT +18" FROM FLOOR (CENTERLINE DIMENSION), EXCEPT WHERE OTHERWISE NOTED. RECEPTACLES AND OUTLETS MAY BE SURFACE MOUNTED WHEN CONDUIT IS SPECIFIED EXPOSED. MOUNT EXTERIOR LOCATED RECEPTACLES WITH WHILE-IN-USE COVERS AT +20" FROM FINISHED GRADE (CENTER DIMENSIONS) TO MAINTAIN INSTALLATION ADA COMPLIANCE.
5. ALL MATERIALS USED TO SEAL PENETRATIONS OF FIRE RATED WALLS AND FLOORS SHALL BE TESTED AND CERTIFIED AS A SYSTEM PER ASTM E814 STANDARDS FOR FIRE TESTS OF THROUGH-PENETRATION FIRESTOPS. REFER TO **26 05 03** FOR ADDITIONAL INFORMATION AND REQUIREMENTS SPECIFIC TO FIRESTOPPING.
6. CONNECTION FOR ELECTRIC WATER COOLERS (EWC) SHALL BE A JUNCTION BOX CONCEALED BEHIND WATER COOLER ACCESS PLATE OR BE A GFI RECEPTACLE LOCATED DIRECTLY BELOW AND CENTERED ON EWC. CONTRACTOR SHALL VERIFY TYPE OF EWC TO BE INSTALLED.
7. MOUNT ALL FIRE ALARM PULL STATIONS AT +42" FROM FLOOR (CENTERLINE DIMENSION) EXCEPT WHERE OTHERWISE NOTED.
8. INSTALL ALL WALL MOUNTED FIRE ALARM NOTIFICATION DEVICES AT 90" ABOVE FINISHED FLOOR OR 6" BELOW THE CEILING, WHICHEVER IS LOWER, EXCEPT WHERE OTHERWISE NOTED. HEIGHT SHALL BE MEASURED TO THE TOP OF THE DEVICE.
9. CONTRACTOR SHALL COORDINATE THE LOCATION OF ALL CEILING MOUNTED DEVICES AND EQUIPMENT WITH LUMINAIRES, SPRINKLER, AND CEILING DIFFUSERS. CENTER ALL DEVICES IN CEILING TILE PATTERN. SMOKE DETECTORS AND OCCUPANCY/VACANCY SENSORS SHALL BE LOCATED NO CLOSER THAN 3 FEET TO AN AIR SUPPLY DIFFUSER OR RETURN GRILLE.
10. ELECTRICAL AND TECHNOLOGY EQUIPMENT SHALL BE MOUNTED TO AVOID IMPEDANCE OF, OPERATION OF, AND/OR ACCESS TO ELECTRICAL AND MECHANICAL EQUIPMENT. ALL MOUNTING OF ELECTRICAL AND TELECOMMUNICATIONS EQUIPMENT, ON EQUIPMENT SUPPLIED BY ANOTHER CONTRACTOR, SHALL BE APPROVED IN ADVANCE BY THE OTHER CONTRACTOR.
11. CONTRACTOR SHALL BE RESPONSIBLE FOR ALL OPENINGS REQUIRED IN WALLS. ALL OPENINGS SHALL BE REPAIRED TO MATCH EXISTING BY A QUALIFIED CONTRACTOR AT THE EXPENSE OF THIS CONTRACTOR. ALL CONDUITS THROUGH WALLS SHALL BE GROUTED OR SEALED INTO OPENINGS.
12. ALL WELDING SHALL BE ACCORDING TO AMERICAN WELDING SOCIETY STANDARDS. CONTRACTOR SHALL FURNISH TO THE ARCHITECT/ENGINEER CERTIFICATES QUALIFYING EACH WELDER, PRIOR TO START OF WORK. THE ARCHITECT/ENGINEER RESERVES THE RIGHT TO REQUIRE QUALIFYING DEMONSTRATION, AT THE CONTRACTOR'S EXPENSE, OF ANY WELDERS ASSIGNED TO THE JOB.
13. EACH CONTRACTOR IS RESPONSIBLE FOR DAMAGE CAUSED BY THEIR ACTIONS TO THE WALLS, FLOORS, CEILINGS, AND ROOFS. THE CONTRACTOR WHOSE WORK CAUSES DAMAGE IS RESPONSIBLE FOR PATCHING TO MATCH ORIGINAL CONSTRUCTION, FIRE RATING, AND FINISH.
14. REFER TO ARCHITECTURAL REFLECTED CEILING PLAN, ELECTRICAL, TECHNOLOGY AUDIO/VISUAL, AND OTHER ELECTRICAL PLANS FOR EXACT LOCATIONS OF ALL CEILING MOUNTED DEVICES, OTHER THAN SPRINKLERS.
15. ELECTRICAL IDENTIFICATION. REFER TO SPECIFICATION SECTION 26 05 53 FOR COLOR/LABEL REQUIREMENTS FOR CONDUIT, BOX, CABLE/WIRE, AND EQUIPMENT.

ELECTRICAL GENERAL NOTES:

1. "NL" INDICATES LUMINAIRE IS UNSWITCHED FOR NIGHT LIGHT.
2. SHADED LUMINAIRE INDICATES LUMINAIRE IS PROVIDED WITH BATTERY PACK.
3. REFER TO SHEET **E508-E509** FOR LUMINAIRE SCHEDULES.
4. { Z###} INDICATES THE LIGHTING ZONES FOR THE SPACE. PROVIDE SEPARATE CONTROL OF EACH CONTROLLED ZONE. LUMINAIRES ASSOCIATED WITH THE SAME ZONE SHALL OPERATE TOGETHER WITHIN THE SAME PROGRAMMED SCENE. REFER TO SHEET **E505-E509**.
5. { B#} PUSH BUTTON REFERS TO SCENE QUANTITY. CONTROL STATION SHALL BE CAPABLE OF {RAISE/LOWER AND} SWITCHING ON/OFF FOR MULTIPLE SCENES AS INDICATED ON SHEETS. COORDINATE QUANTITIES OF BUTTONS FOR CONTROL STATIONS WITH LIGHTING CONTROL MANUFACTURER.
6. VACANCY/OCCUPANCY SENSOR LAYOUT: SENSORS ARE SHOWN ON THE PLANS FOR DESIGN INTENT AND MAY NOT REPRESENT EVERY DEVICE. PROVIDE MANUFACTURER SPECIFIC FLOOR PLAN LAYOUTS SHOWING LOCATION, ORIENTATION, AND COVERAGE AREA OF EACH CONTROL DEVICE, SENSOR, AND CONTROLLER/INTERFACE. AREAS REQUIRING MULTIPLE SENSOR DEVICES FOR APPROPRIATE COVERAGE, SUBMIT SPECIFIC MANUFACTURER-APPROVED SENSOR LAYOUT AS AN OVERLAY DIRECTLY ON THE PROJECT DRAWINGS, EITHER IN PRINT OR APPROVED ELECTRONIC FORM.

LUMINAIRE KEY:

LUMINAIRE
F1 = FIXTURE TAG
1 = CIRCUIT NUMBER
a = SWITCH DESIGNATION
NL = SUBSCRIPT (IF APPLICABLE)
Z = ZONE DESIGNATION

*IF LABEL IS ORIENTED HORIZONTALLY A SLASH WILL SEPARATE THIS INFORMATION. EX: F1 / 1 / a / NL

DEVICE KEY:

DEVICE
A = MOUNTING (IF APPLICABLE)
1 = CIRCUIT NUMBER

*IF LABEL IS ORIENTED HORIZONTALLY A SLASH WILL SEPARATE THIS INFORMATION. EX: A / 1

ELECTRICAL MOUNTING SUBSCRIPT KEY:

A	MOUNT AT +6" TO CENTERLINE ABOVE COUNTER OR BACKSPLASH
C	MOUNT AT CEILING
H	MOUNT ORIENTED HORIZONTALLY
L	MOUNT IN CASEWORK
M	MOUNT IN MODULAR FURNITURE
R	MOUNT IN SURFACE RACEWAY
EWC	ELECTRIC WATER COOLER

IMEG
www.imegcorp.com
5000 E PIMA CENTER PARKWAY
SUITE 320
SCOTTSDALE, AZ 85258
P: 480.222.3771

IMEG CORP. RESERVES PROPRIETARY RIGHTS, INCLUDING COPYRIGHTS, TO THIS DRAWING AND THE DATA SHOWN THEREON. SAID DRAWING AND DATA ARE THE EXCLUSIVE PROPERTY OF IMEG CORP. AND SHALL NOT BE USED OR REPRODUCED FOR ANY OTHER PROJECT WITHOUT THE EXPRESS WRITTEN APPROVAL AND PARTICIPATION OF IMEG CORP. ©2023 IMEG CORP.

0 1 2 3
REF. SCALE IN INCHES
PROJECT #23002327.00

STAMP

DYRON MURPHY ARCHITECTS, P.C.

4505 Montbel Place NE, Albuquerque, New Mexico 87107

SHIPROCK PINNACLE HOTEL & RESTAURANT

SHIPROCK, NEW MEXICO

100% CONSTRUCTION DOCUMENTS

ISSUED FOR CONSTRUCTION

NOVEMBER 3, 2023

PROJECT NUMBER	DRAWN BY	PROJ MGR
2022.10	IMEG	IMEG

ELECTRICAL COVERSHEET

Sheet Title

Sheet Number of

E000

11/1/2023 1:01:20 PM
Autodesk Docs://23002327.00 - Shiprock Pinnacle Hotel & Restaurant/MEP22_23002327.00_Shiprock Pinnacle Hotel_C.rvt
DYRON MURPHY ARCHITECTS, P.C.

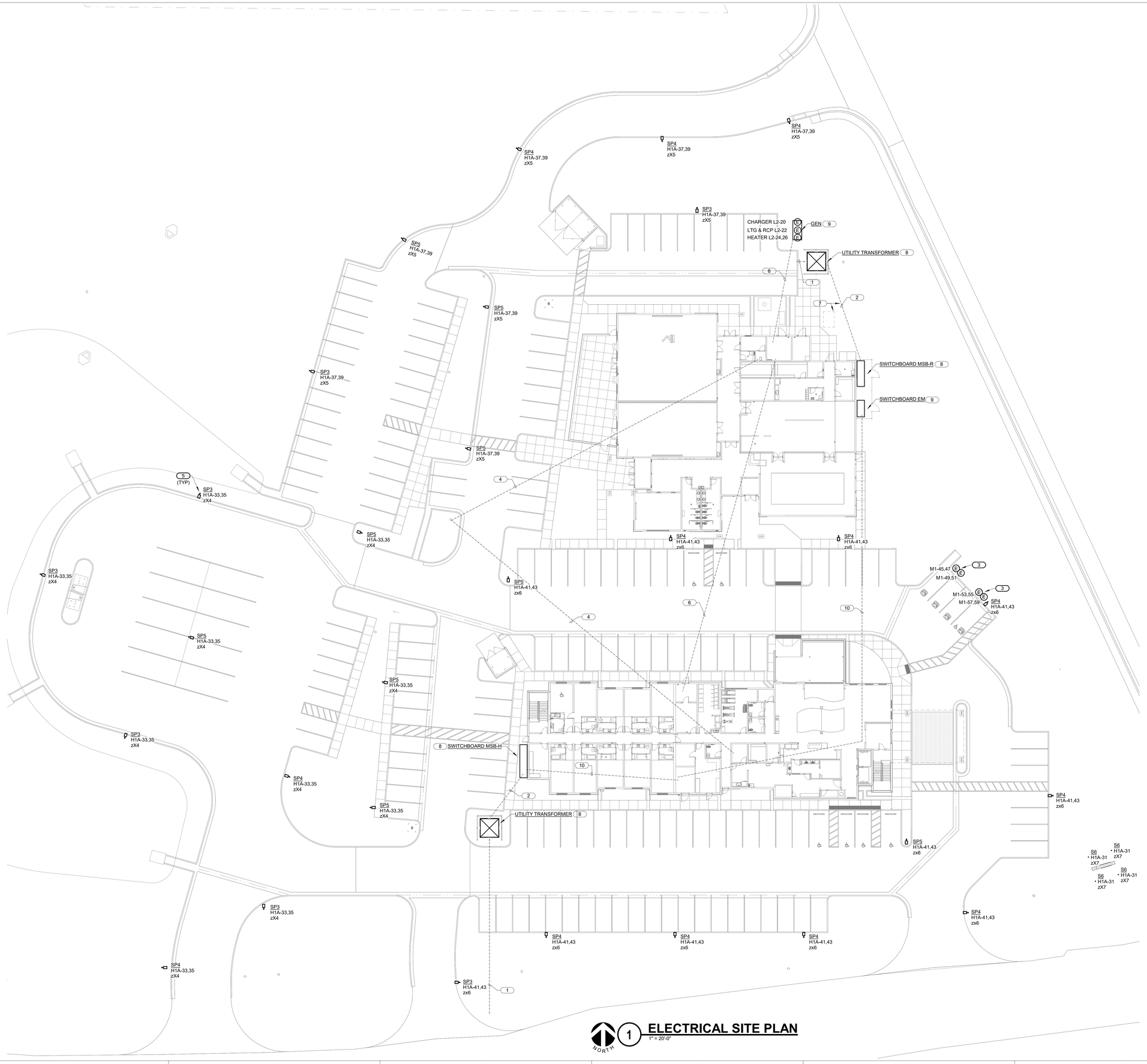

1 **ELECTRICAL SITE PLAN**
1" = 20'-0"

KEYNOTES: #

1. PRIMARY FEEDER PER NTUA REQUIREMENTS. PROVIDE ALLOWANCE FOR UP TO 200' OF (3 3" CONDUITS. CONFIRM FINAL REQUIREMENTS WITH NTUA.
2. SECONDARY FEEDER CUSTOMER OWNED. SEE SINGLE LINE FOR MORE INFORMATION.
3. DUAL POINT EV CHARGER. IF GFCI PROTECTION IS NOT PROVIDED INTEGRAL FROM MANUFACTURER PROVIDE GFCI BREAKER AT PANEL BOARD. ROUTING CIRCUITS IN COMMON CONDUIT REQUIRES DERATE OF CONDUCTORS. PROVIDE 1" CONDUIT FOR LOW VOLTAGE CABLING BACK TO PBX ROOM.
4. PROVIDE (2) 4" CONDUITS TO UTILITY TERMINATION FOR LOW VOLTAGE CABLING. COORDIANTE FINAL LOCATION WITH UTILITY PROVIDER PRIOR TO ROUGH-IN.
5. REFER TO SHEET E508 FOR POLE BASE DETAIL.
6. PROVIDE (1) 2" CONDUIT FOR GENERATOR LOW VOLTAGE CABELING.
7. ROUTE SECONDARY TO MAINTAIN 3' CLEARANCE FROM GREASE INTERCEPTOR.
8. PROVIDE PAD PER NTUA REQUIREMENTS.
9. PROVIDE PAD PER STRUCTURAL PLANS.
10. FIRE PUMP FEEDERS. REFER TO SINGLE LINE FOR MORE INFORMATION.

IMEG
5000 E PIMA CENTER PARKWAY
SUITE 320
SCOTTSDALE, AZ 85258
P: 480.222.3771
www.imegcorp.com

IMEG CORP. RESERVES PROPRIETARY RIGHTS, INCLUDING COPYRIGHTS, TO THIS DRAWING AND THE DATA SHOWN THEREON. SAID DRAWING AND/OR DATA ARE THE EXCLUSIVE PROPERTY OF IMEG CORP. AND SHALL NOT BE USED OR REPRODUCED FOR ANY OTHER PROJECT WITHOUT THE EXPRESS WRITTEN APPROVAL AND PARTICIPATION OF IMEG CORP. ©2023 IMEG CORP.

0 1 2 3
REF. SCALE IN INCHES
PROJECT #23002327.00

STAMP

DYRON MURPHY ARCHITECTS, P.C.

4505 Montbel Place NE, Albuquerque, New Mexico 87107

SHIPROCK PINNACLE HOTEL & RESTAURANT

SHIPROCK, NEW MEXICO

100% CONSTRUCTION DOCUMENTS

ISSUED FOR CONSTRUCTION

NOVEMBER 3, 2023

PROJECT NUMBER	DRAWN BY	PROJ MGR
2022.10	IMEG	IMEG

ELECTRICAL SITE PLAN

Sheet Title

Sheet Number of

E001

11/1/2023 1:47:12 PM Autodesk Docs://23002327.00 - Shiprock Pinnacle Hotel & Restaurant/MEP/2_23002327.00_Shiprock Pinnacle Hotel_C.rvt
DYRON MURPHY ARCHITECTS, P.C.

KEYNOTES: (#)

1. MOUNT LOW VOLTAGE DRIVER ABOVE NEARBY DROP CEILING. ROUTE SO THAT EXPOSED LOW VOLTAGE CABLING IS MINIMALIZED.
2. MOUNT SO THAT BOTTOM OF FIXTURE TO BE 11'6" ABOVE GRADE.
3. PROVIDE UL-924 DEVICE FOR LOCALLY CONTROL EMERGENCY FIXTURES.
4. MASTER CONTROL STATION. PROVIDE RAISE, LOWER, ON/OFF CONTROLS FOR ALL ZONES.

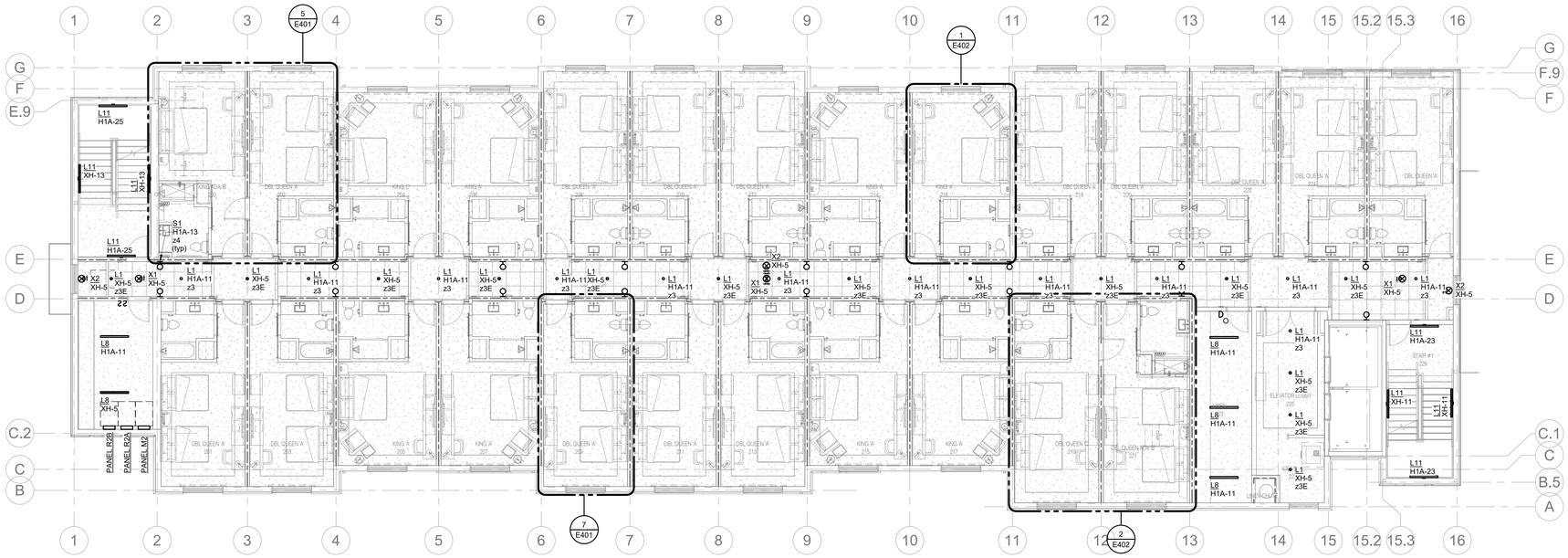

NORTH

2 SECOND FLOOR ELECTRICAL LIGHTING PLAN

1/8" = 1'-0"

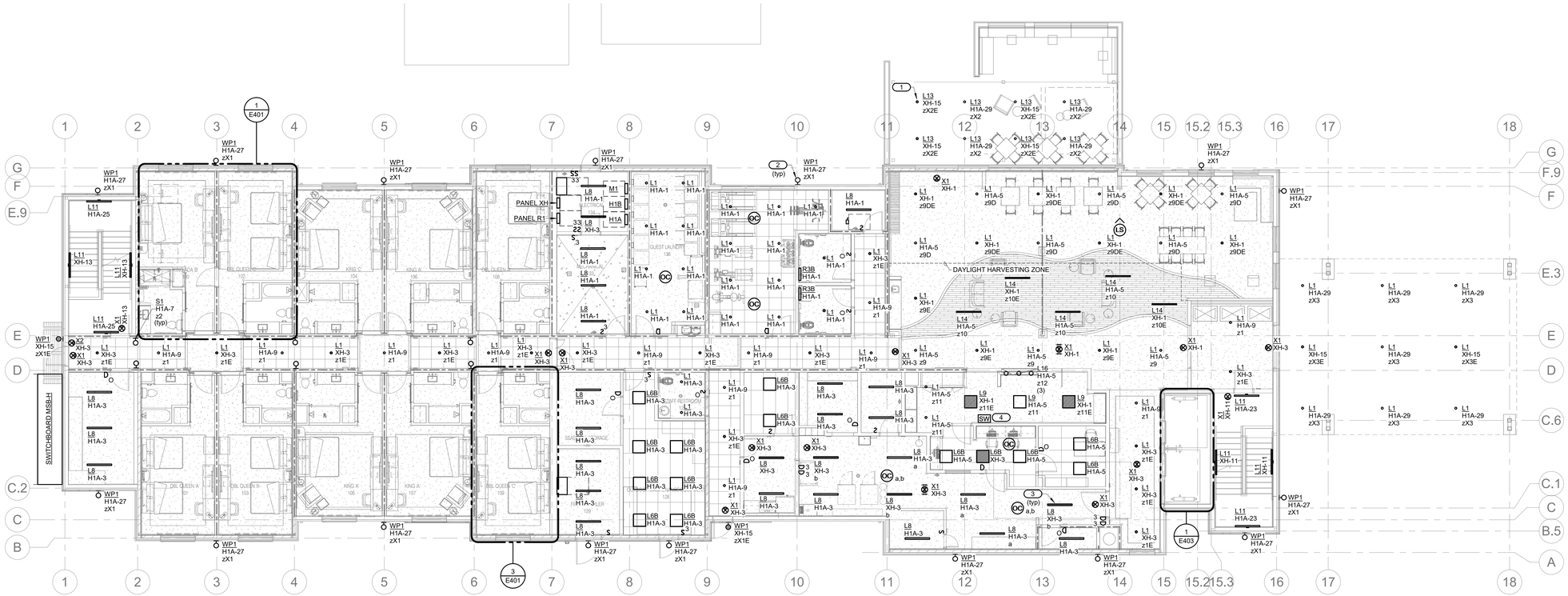

NORTH

1 FIRST FLOOR ELECTRICAL LIGHTING PLAN

1/8" = 1'-0"

IMEG
9000 E PIMA CENTER PARKWAY
SUITE 320
SCOTTSDALE, AZ 85258
P: 480.222.3771
www.imegcorp.com

IMEG CORP. RESERVES PROPRIETARY RIGHTS, INCLUDING COPYRIGHTS, TO THIS DRAWING AND THE DATA SHOWN THEREON. SAID DRAWING AND/OR DATA ARE THE EXCLUSIVE PROPERTY OF IMEG CORP. AND SHALL NOT BE USED OR REPRODUCED FOR ANY OTHER PROJECT WITHOUT THE EXPRESS WRITTEN APPROVAL AND PARTICIPATION OF IMEG CORP. ©2023 IMEG CORP.

0 1 2 3
REF. SCALE IN INCHES
PROJECT #23002327.00

STAMP

DYRON MURPHY ARCHITECTS, P.C.

4505 Montbel Place NE, Albuquerque, New Mexico 87107

SHIPROCK PINNACLE HOTEL & RESTAURANT

SHIPROCK, NEW MEXICO

100% CONSTRUCTION DOCUMENTS

ISSUED FOR CONSTRUCTION

NOVEMBER 3, 2023

PROJECT NUMBER	DRAWN BY	PROJ MGR
2022.10	IMEG	IMEG

FIRST & SECOND FLOOR ELECTRICAL LIGHTING PLAN

Sheet Title

Sheet Number

of

E101

11/17/2023 1:01:32 PM Autodesk Docs://23002327.00 - Shiprock Pinnacle Hotel & Restaurant/MEP/2_23002327.00_Shiprock Pinnacle Hotel_C.rvt
DYRON MURPHY ARCHITECTS, P.C.

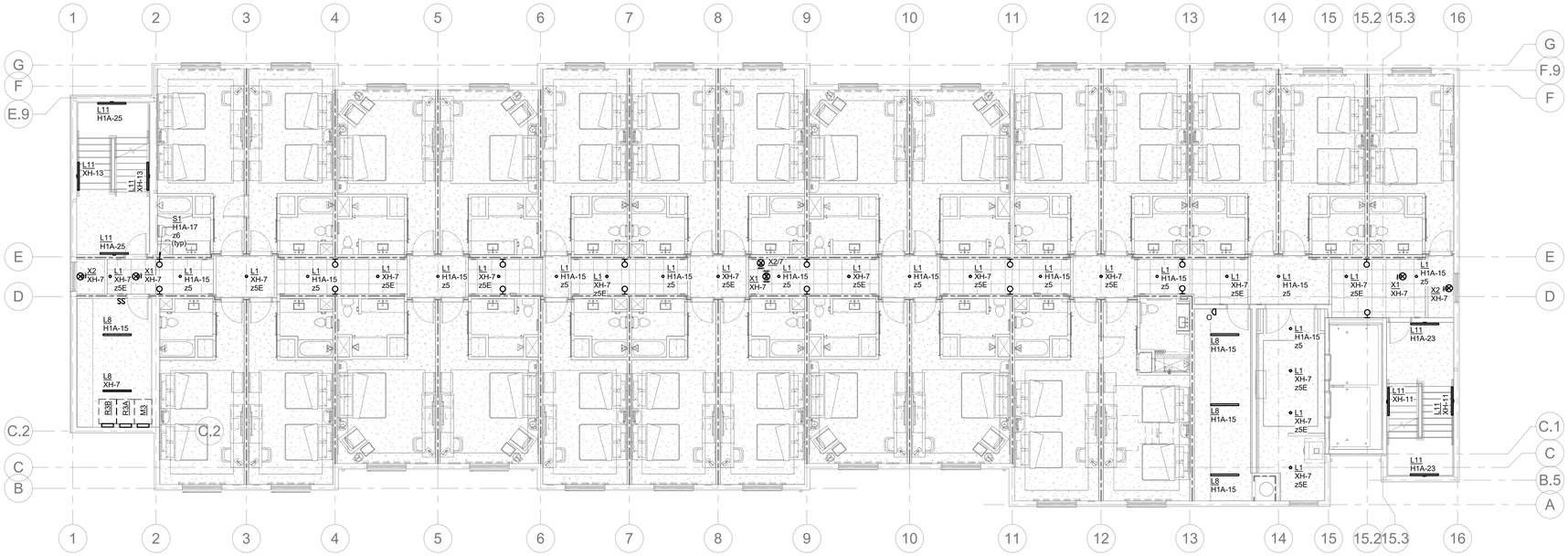

NORTH

1 THIRD FLOOR ELECTRICAL LIGHTING PLAN

1/8" = 1'-0"

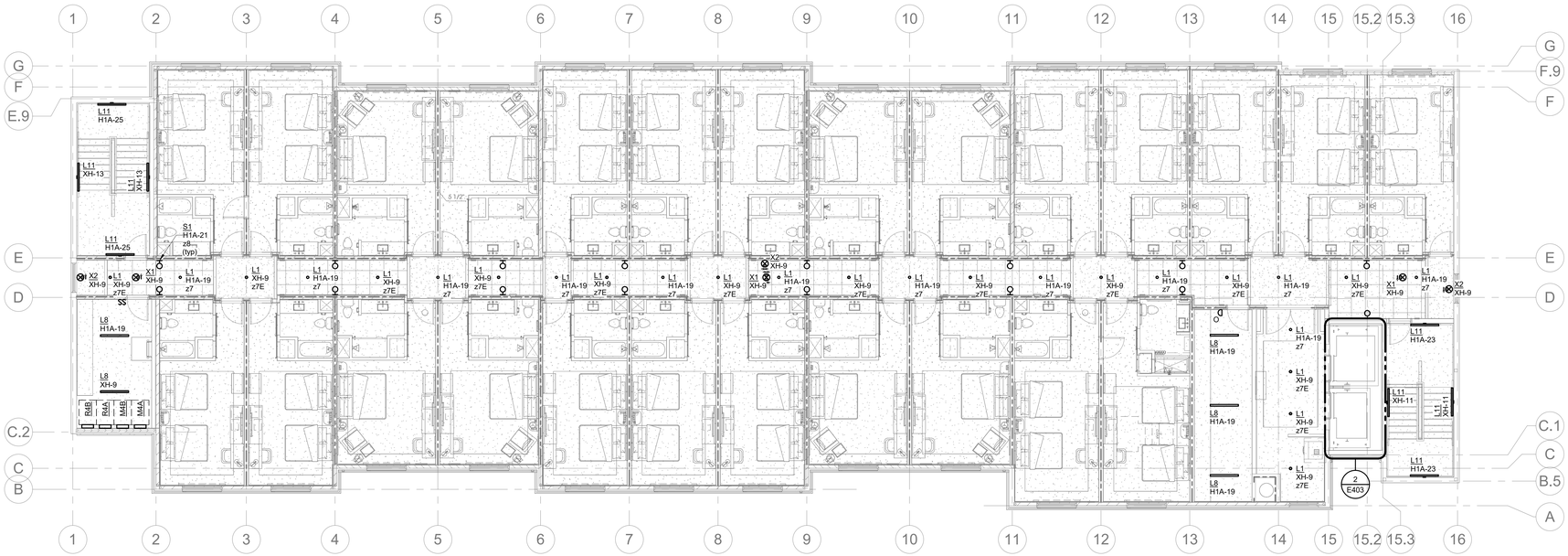

NORTH

2 FOURTH FLOOR ELECTRICAL LIGHTING PLAN

1/8" = 1'-0"

IMEG
9000 E PIMA CENTER PARKWAY
SUITE 320
SCOTTSDALE, AZ 85258
P: 480.222.3771
www.imegcorp.com

IMEG CORP. RESERVES PROPRIETARY RIGHTS, INCLUDING COPYRIGHTS, TO THIS DRAWING AND THE DATA SHOWN THEREON. SAID DRAWING AND/OR DATA ARE THE EXCLUSIVE PROPERTY OF IMEG CORP. AND SHALL NOT BE USED OR REPRODUCED FOR ANY OTHER PROJECT WITHOUT THE EXPRESS WRITTEN APPROVAL AND PARTICIPATION OF IMEG CORP. ©2023 IMEG CORP.

0 1 2 3
REF. SCALE IN INCHES
PROJECT #23002327.00

STAMP

DYRON MURPHY ARCHITECTS, P.C.
4505 Montbel Place NE, Albuquerque, New Mexico 87107

SHIPROCK PINNACLE HOTEL & RESTAURANT

SHIPROCK, NEW MEXICO

100% CONSTRUCTION DOCUMENTS

ISSUED FOR CONSTRUCTION

NOVEMBER 3, 2023

PROJECT NUMBER	DRAWN BY	PROJ MGR
2022.10	IMEG	IMEG

THIRD & FOURTH FLOOR ELECTRICAL LIGHTING PLAN

Sheet Title

Sheet Number

of

E102

11/7/2023 1:01:38 PM Autodesk Docs://23002327.00 - Shiprock Pinnacle Hotel & Restaurant/MEP/2_23002327.00_Shiprock Pinnacle Hotel_C.rvt
DYRON MURPHY ARCHITECTS, P.C.

SHEET NOTES:

1. COORDINATE EXACT LOCATION AND MOUNTING HEIGHT FOR ALL DEVICES WITH ARCHITECTURAL DRAWINGS PRIOR TO ROUGH-IN.
2. VERIFY COLOR/FINISH OF ALL DEVICES IN PUBLIC AREAS WITH INTERIOR DESIGNER, ARCHITECT AND OR OWNER'S REPRESENTATIVE.
3. PROVIDE TAMPER RESISTANT RECEPTACLES IN AREAS SPECIFIED PER NEC ARTICLE 406.12.
4. VERIFY ALL NEMA CONFIGURATIONS OF ALL DEVICES PRIOR TO ROUGH-IN.
5. PROVIDE NEMA-3R ENCLOSURES FOR ALL ELECTRICAL EQUIPMENT LOCATED OUTDOORS. PROVIDE WEATHERPROOF WHILE-IN-USE COVER FOR ALL EXTERIOR RECEPTACLES.
6. PROVIDE 1-1/4" DEEP BACK BOX FOR WIRING DEVICES ASSOCIATED WITH FURRED OUT COLUMN LOCATIONS.
7. PROVIDE 1" CONDUIT TO ACCESSIBLE CEILING SPACE FOR ALL DATA ROUGH-IN LOCATIONS.
8. THE FOLLOWING BRANCH CIRCUITS SERVE GUEST ROOM LOADS AS NOTED. REFER TO ELECTRICAL GUESTROOM PLANS FOR FURTHER INFORMATION:

   H1: REPRESENTS GENERAL RECEPTACLE/LIGHTING CIRCUIT.
   H2: REPRESENTS BATHROOM RECEPTACLE/LIGHTING CIRCUIT.
   H3: REPRESENTS COFFEE CIRCUIT.
   H4: REPRESENTS MICROWAVE CIRCUIT.

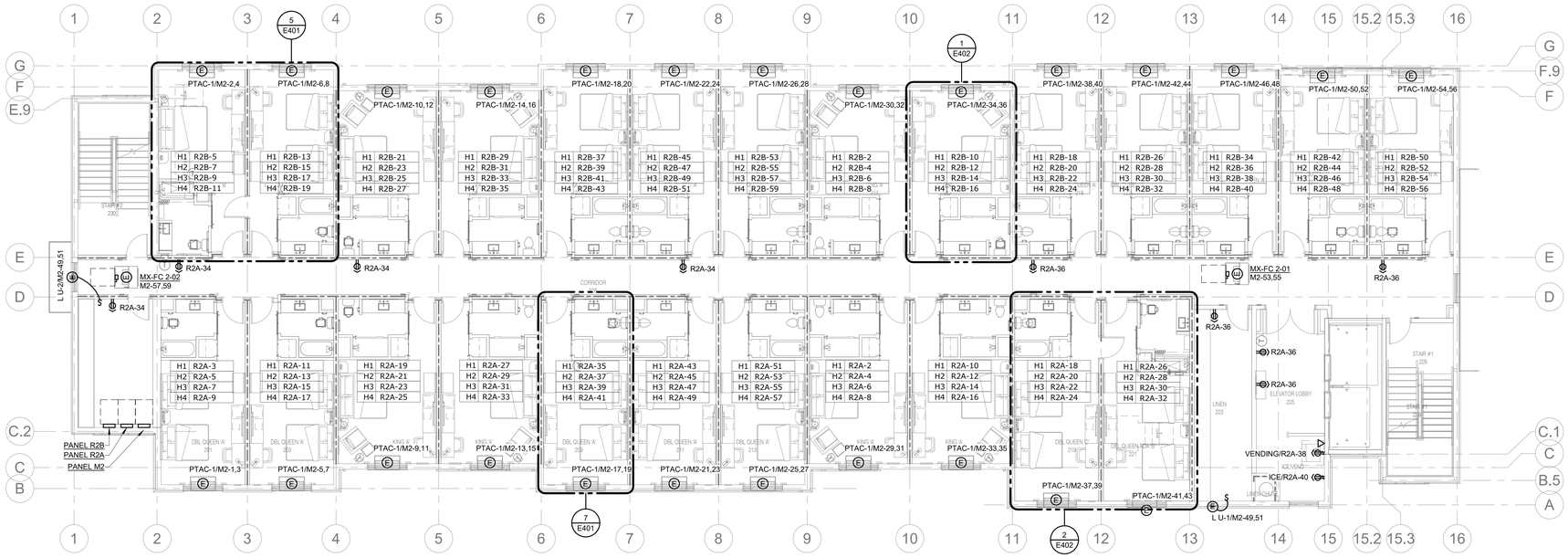

2 SECOND FLOOR ELECTRICAL POWER PLAN

1/8" = 1'-0"

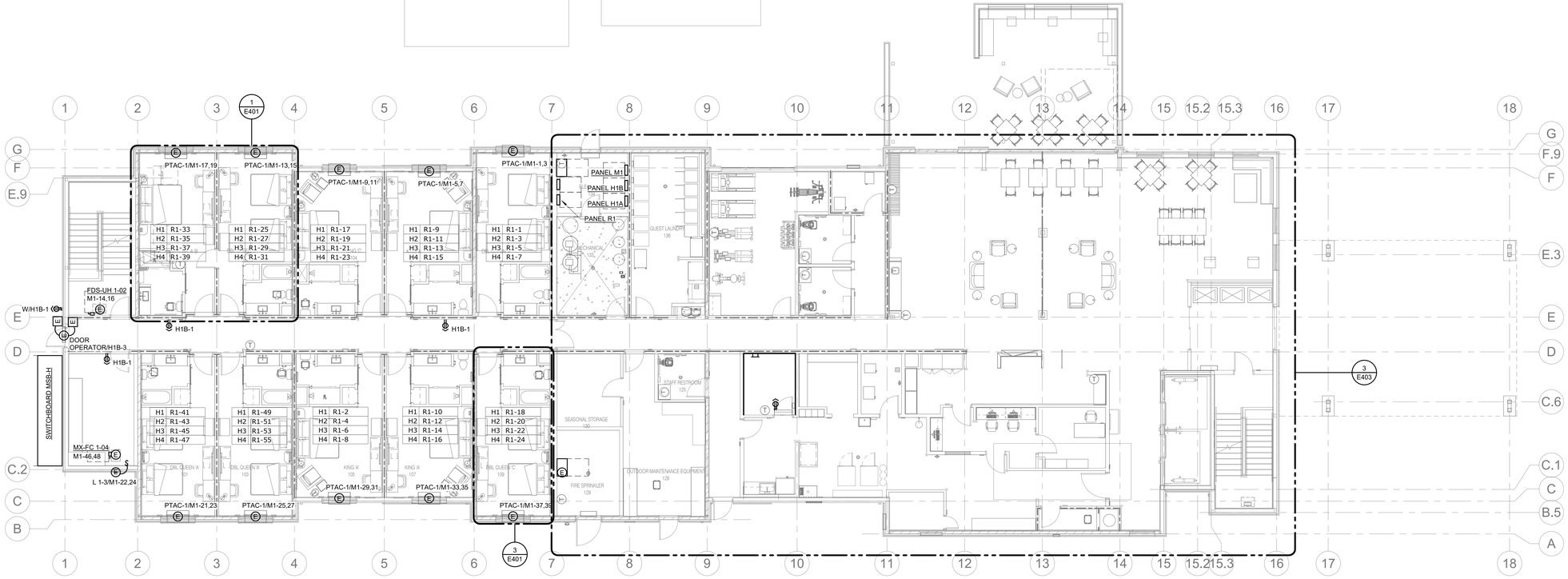

1 FIRST FLOOR ELECTRICAL POWER PLAN

1/8" = 1'-0"

IMEG
9000 E PIMA CENTER PARKWAY
SUITE 320
SCOTTSDALE, AZ 85258
P: 480.222.3771
www.imegcorp.com

IMEG CORP. RESERVES PROPRIETARY RIGHTS, INCLUDING COPYRIGHTS, TO THIS DRAWING AND THE DATA SHOWN THEREON. SAID DRAWING AND/OR DATA ARE THE EXCLUSIVE PROPERTY OF IMEG CORP. AND SHALL NOT BE USED OR REPRODUCED FOR ANY OTHER PROJECT WITHOUT THE EXPRESS WRITTEN APPROVAL AND PARTICIPATION OF IMEG CORP. ©2023 IMEG CORP.

REF. SCALE IN INCHES — PROJECT #23002327.00

STAMP

DYRON MURPHY ARCHITECTS, P.C.

4505 Montbel Place NE, Albuquerque, New Mexico 87107

SHIPROCK PINNACLE HOTEL & RESTAURANT

SHIPROCK, NEW MEXICO

100% CONSTRUCTION DOCUMENTS

ISSUED FOR CONSTRUCTION

NOVEMBER 3, 2023

PROJECT NUMBER	DRAWN BY	PROJ MGR
2022.10	IMEG	IMEG

FIRST & SECOND FLOOR ELECTRICAL POWER PLAN

Sheet Title

Sheet Number

of

E103

11/7/2023 1:01:56 PM Autodesk Docs://23002327.00 - Shiprock Pinnacle Hotel & Restaurant/MEP/2_23002327.00_Shiprock Pinnacle Hotel_C.rvt
DYRON MURPHY ARCHITECTS, P.C.

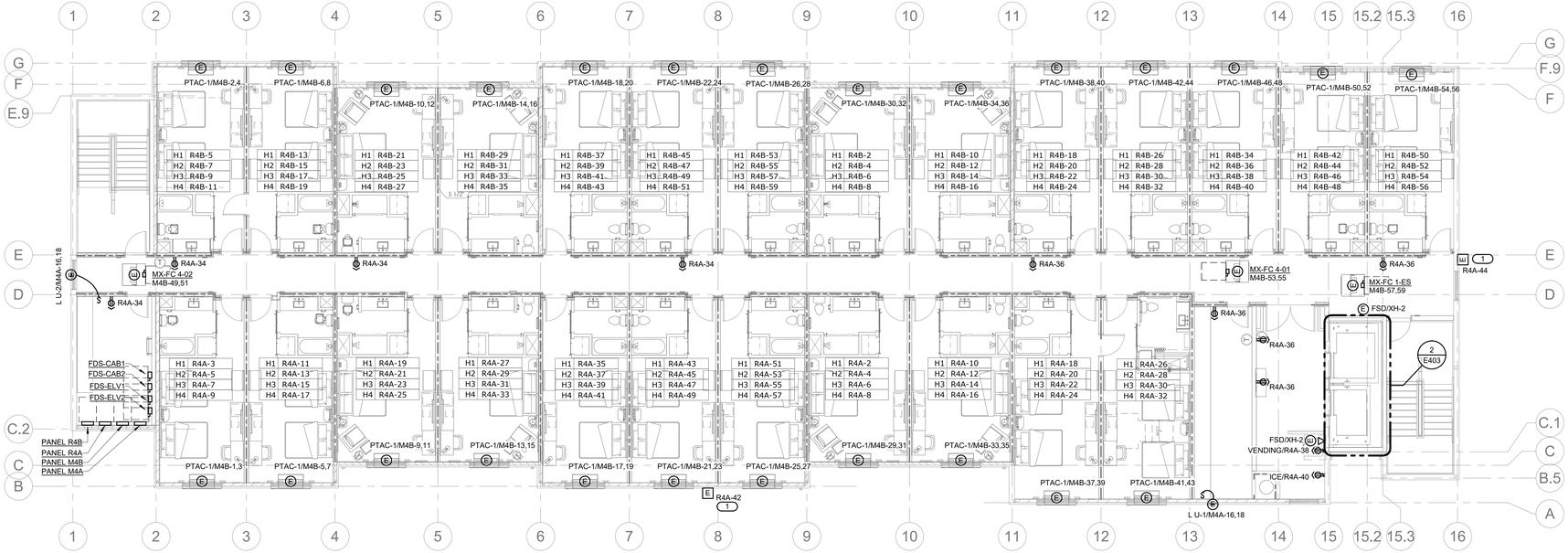

2 FOURTH FLOOR ELECTRICAL POWER PLAN

1/8" = 1'-0"

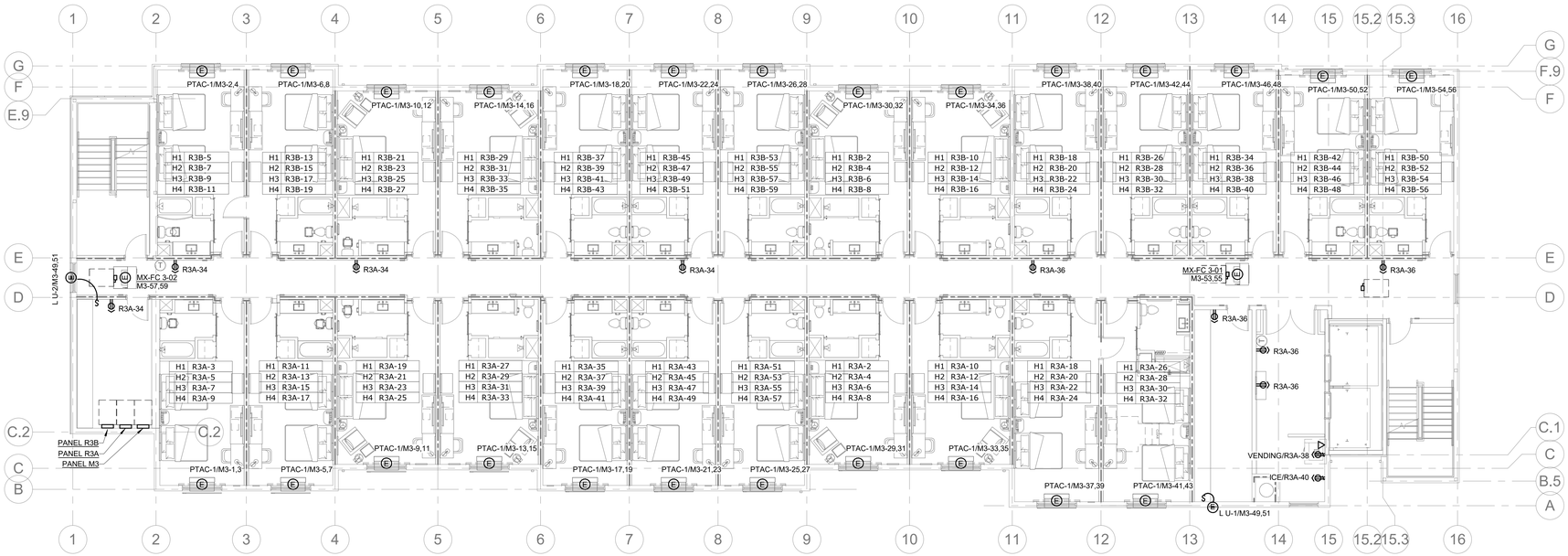

1 THIRD FLOOR ELECTRICAL POWER PLAN

1/8" = 1'-0"

SHEET NOTES:

1. COORDINATE EXACT LOCATION AND MOUNTING HEIGHT FOR ALL DEVICES WITH ARCHITECTURAL DRAWINGS PRIOR TO ROUGH-IN.
2. VERIFY COLOR/FINISH OF ALL DEVICES IN PUBLIC AREAS WITH INTERIOR DESIGNER, ARCHITECT AND OR OWNER'S REPRESENTATIVE.
3. PROVIDE TAMPER RESISTANT RECEPTACLES IN AREAS SPECIFIED PER NEC ARTICLE 406.12.
4. VERIFY ALL NEMA CONFIGURATIONS OF ALL DEVICES PRIOR TO ROUGH-IN.
5. PROVIDE NEMA-3R ENCLOSURES FOR ALL ELECTRICAL EQUIPMENT LOCATED OUTDOORS. PROVIDE WEATHERPROOF WHILE-IN-USE COVER FOR ALL EXTERIOR RECEPTACLES.
6. PROVIDE 1-1/4" DEEP BACK BOX FOR WIRING DEVICES ASSOCIATED WITH FURRED OUT COLUMN LOCATIONS.
7. PROVIDE 1" CONDUIT TO ACCESSIBLE CEILING SPACE FOR ALL DATA ROUGH-IN LOCATIONS.
8. THE FOLLOWING BRANCH CIRCUITS SERVE GUEST ROOM LOADS AS NOTED. REFER TO ELECTRICAL GUESTROOM PLANS FOR FURTHER INFORMATION:

   H1: REPRESENTS GENERAL RECEPTACLE/LIGHTING CIRCUIT.
   H2: REPRESENTS BATHROOM RECEPTACLE/LIGHTING CIRCUIT.
   H3: REPRESENTS COFFEE CIRCUIT.
   H4: REPRESENTS MICROWAVE CIRCUIT.

KEYNOTES: (#)

1. SIGNAGE. COORDINATE EXACT LOCATION AND REQUIREMENTS WITH ARCHITECT PRIOR TO ROUGH IN.

IMEG
9000 E PIMA CENTER PARKWAY
SUITE 320
SCOTTSDALE, AZ 85258
P: 480.222.3771
www.imegcorp.com

IMEG CORP. RESERVES PROPRIETARY RIGHTS, INCLUDING COPYRIGHTS, TO THIS DRAWING AND THE DATA SHOWN THEREON. SAID DRAWING AND/OR DATA ARE THE EXCLUSIVE PROPERTY OF IMEG CORP. AND SHALL NOT BE USED OR REPRODUCED FOR ANY OTHER PROJECT WITHOUT THE EXPRESS WRITTEN APPROVAL AND PARTICIPATION OF IMEG CORP. ©2023 IMEG CORP.

0 1 2 3
REF. SCALE IN INCHES
PROJECT #23002327.00

STAMP

DYRON MURPHY ARCHITECTS, P.C.
4505 Montbel Place NE, Albuquerque, New Mexico 87107

SHIPROCK PINNACLE HOTEL & RESTAURANT

SHIPROCK, NEW MEXICO

100% CONSTRUCTION DOCUMENTS

ISSUED FOR CONSTRUCTION

NOVEMBER 3, 2023

PROJECT NUMBER	DRAWN BY	PROJ MGR
2022.10	IMEG	IMEG

THIRD & FOURTH FLOOR ELECTRICAL POWER PLAN

Sheet Title

Sheet Number

of

E104

11/7/2023 1:01:50 PM Autodesk Docs://23002327.00 - Shiprock Pinnacle Hotel & Restaurant/MEP/2_23002327.00_Shiprock Pinnacle Hotel_C.rvt
DYRON MURPHY ARCHITECTS, P.C.

KEYNOTES: #

1. MOUNT LOW VOLTAGE DRIVER ABOVE NEARBY DROP CEILING. ROUTE SO THAT EXPOSED LOW VOLTAGE CABLING IS MINIMALIZED.
2. OVER RIDE PUSH BOTTON.
3. MOUNT SO THAT BOTTOM OF FIXTURE TO BE 11'6" ABOVE GRADE.
4. MOUNT SO THAT CENTER OF THE FIXTURE TO BE 6' ABOVE GRADE.
5. WALL STATION: 4 ZONES W RAISE, LOWER, ON/OFF.
6. WALL STATION: 7 ZONES W RAISE, LOWER, ON/OFF.
7. MASTER CONTROL STATION: PROVIDE RAISE, LOWER, ON/OFF AND OVER RIDE FOR ALL ZONES.

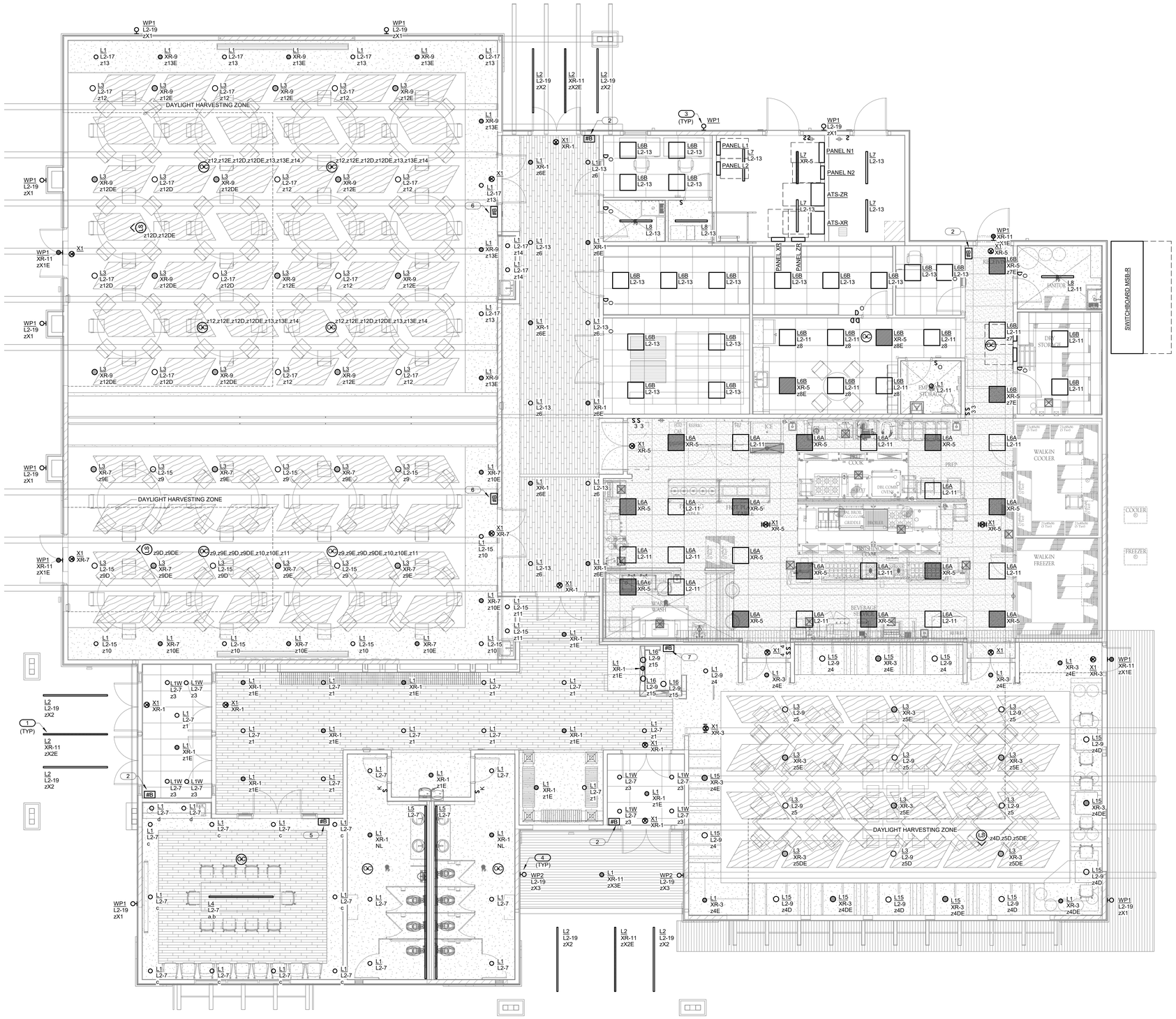

NORTH

1 **ELECTRICAL LIGHTING PLAN - RESTAURANT**
3/16" = 1'-0"

IMEG
9000 E PIMA CENTER PARKWAY
SUITE 320
SCOTTSDALE, AZ 85258
P: 480.222.3771
www.imegcorp.com

IMEG CORP. RESERVES PROPRIETARY RIGHTS, INCLUDING COPYRIGHTS, TO THIS DRAWING AND THE DATA SHOWN THEREON. SAID DRAWING AND/OR DATA ARE THE EXCLUSIVE PROPERTY OF IMEG CORP. AND SHALL NOT BE USED OR REPRODUCED FOR ANY OTHER PROJECT WITHOUT THE EXPRESS WRITTEN APPROVAL AND PARTICIPATION OF IMEG CORP. ©2023 IMEG CORP.

0 1 2 3
REF. SCALE IN INCHES
PROJECT #23002327.00

STAMP

DYRON MURPHY ARCHITECTS, P.C.
4505 Montbel Place NE, Albuquerque, New Mexico 87107

SHIPROCK PINNACLE HOTEL & RESTAURANT

SHIPROCK, NEW MEXICO

100% CONSTRUCTION DOCUMENTS

ISSUED FOR CONSTRUCTION

NOVEMBER 3, 2023

PROJECT NUMBER	DRAWN BY	PROJ MGR
2022.10	IMEG	IMEG

ELECTRICAL LIGHTING PLAN - RESTAURANT

Sheet Title

Sheet Number of

E105

11/1/2023 11:09:23 AM Autodesk Docs://23002327.00 - Shiprock Pinnacle Hotel & Restaurant/MEP22_23002327.00_Shiprock Pinnacle Restaurant_C.rvt
DYRON MURPHY ARCHITECTS, P.C.

SHEET NOTES:

1. .
2. .
3. .

KEYNOTES: (#)

1. DISTRIBUTIVE LIGHTING CONTROLLER HEAD END UNIT.
2. PROVIDE 3/4"X8'X RUN LENGTH PER PLAN A/C FIRE TREATED, PAINTED BACKBOARD. BOND TELEPONE BACKGROUND WITH #6 INSULATED GROUNDING CONDUCTOR VIA GROUND BUS.
3. TELECOM GROUNIG BUS: PROVIDE 12"X2"X1/4" CU GROUND BAR. REFER TO GROUNDING DIAGRAM FOR MORE INFORMATION.
4. PROVIDE STAMPED STEEL IN GRADE FLOOR BOX WITH 2" KNOCK-OUTS, FLUSH PASS THRU COVER, (2) DUPLEX RECEPTACLES, (4) DATA PORTS AND (1) COAXIAL PORT. PROVIDE (2) 2" CONDUITS TO NEAREST ACCESSIBLE CEILING SPACE FOR LOW VOLTAGE CABLING. WIREMOLD RFB OR APPROVED EQUAL.
5. CONNECT TO LIGHTING CONTROL SYSTEM TO PROVIDE TIME CLOCK FUNCTION.
6. INDOOR UNIT POWERED FROM OUTDOOR UNIT. PROVIDE (3) #12 FROM OUTDOOR UNIT TO INDOOR UNIT.
7. HEAT TAPE FOR GREASE LINE. SEE PLUMBING PLANS FOR MORE INFORMATION.
8. DEVICES MOUNTED IN MILLWORK. COORINATE EXACT LOCATION WITH OWNER/ARCHITECT PRIOR TO ROUGH-IN.
9. PROJECTOR CONTROLLER.

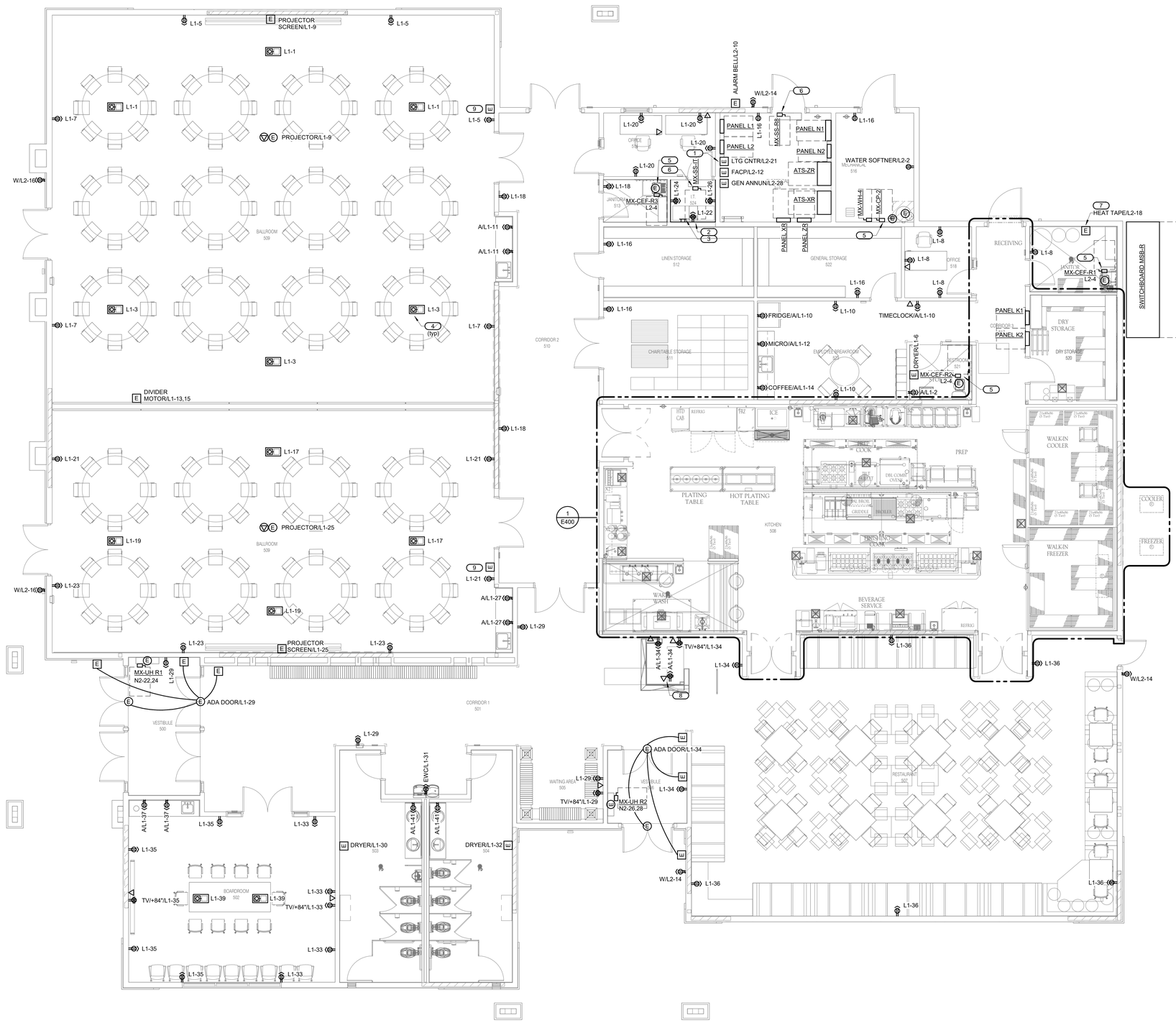

1 ELECTRICAL POWER PLAN - RESTAURANT

3/16" = 1'-0"

IMEG
9000 E PIMA CENTER PARKWAY
SUITE 320
SCOTTSDALE, AZ 85258
P: 480.222.3771
www.imegcorp.com

IMEG CORP. RESERVES PROPRIETARY RIGHTS, INCLUDING COPYRIGHTS, TO THIS DRAWING AND THE DATA SHOWN THEREON. SAID DRAWING AND/OR DATA ARE THE EXCLUSIVE PROPERTY OF IMEG CORP. AND SHALL NOT BE USED OR REPRODUCED FOR ANY OTHER PROJECT WITHOUT THE EXPRESS WRITTEN APPROVAL AND PARTICIPATION OF IMEG CORP. ©2023 IMEG CORP.

0 1 2 3
REF. SCALE IN INCHES
PROJECT #23002327.00

STAMP

DYRON MURPHY ARCHITECTS, P.C.

4505 Montbel Place NE, Albuquerque, New Mexico 87107

SHIPROCK PINNACLE HOTEL & RESTAURANT

SHIPROCK, NEW MEXICO

100% CONSTRUCTION DOCUMENTS

ISSUED FOR CONSTRUCTION

NOVEMBER 3, 2023

PROJECT NUMBER	DRAWN BY	PROJ MGR
2022.10	IMEG	IMEG

ELECTRICAL POWER PLAN - RESTAURANT

Sheet Title

Sheet Number of

E106

11/1/2023 11:09:27 AM Autodesk Docs://23002327.00 - Shiprock Pinnacle Hotel & Restaurant/MEP/2_23002327.00_Shiprock Pinnacle Restaurant_C.rvt
DYRON MURPHY ARCHITECTS, P.C.

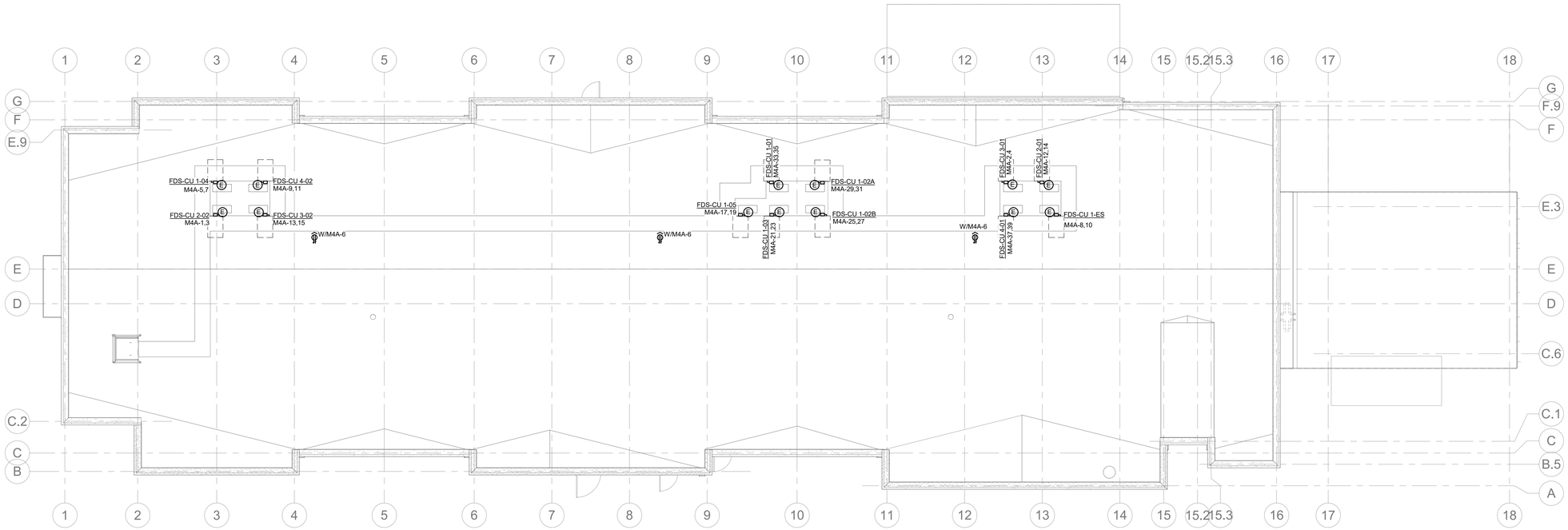

NORTH

1 ELECTRICAL POWER ROOF PLAN - HOTEL

1/8" = 1'-0"

IMEG
9000 E PIMA CENTER PARKWAY
SUITE 320
SCOTTSDALE, AZ 85258
P. 480.222.3771
www.imegcorp.com

IMEG CORP. RESERVES PROPRIETARY RIGHTS, INCLUDING COPYRIGHTS, TO THIS DRAWING AND THE DATA SHOWN THEREON. SAID DRAWING AND/OR DATA ARE THE EXCLUSIVE PROPERTY OF IMEG CORP. AND SHALL NOT BE USED OR REPRODUCED FOR ANY OTHER PROJECT WITHOUT THE EXPRESS WRITTEN APPROVAL AND PARTICIPATION OF IMEG CORP. ©2023 IMEG CORP.

0 1 2 3
REF. SCALE IN INCHES PROJECT #23002327.00

STAMP

DYRON MURPHY ARCHITECTS, P.C.

4505 Montbel Place NE, Albuquerque, New Mexico 87107

SHIPROCK PINNACLE HOTEL & RESTAURANT

SHIPROCK, NEW MEXICO

100% CONSTRUCTION DOCUMENTS

ISSUED FOR CONSTRUCTION

NOVEMBER 3, 2023

PROJECT NUMBER	DRAWN BY	PROJ MGR
2022.10	IMEG	IMEG

ELECTRICAL ROOF PLAN - HOTEL

Sheet Title

Sheet Number of

E112

11/1/2023 1:01:03 PM Autodesk Docs://23002327.00 - Shiprock Pinnacle Hotel & Restaurant/MEP/2_23002327.00_Shiprock Pinnacle Hotel_C.rvt

DYRON MURPHY ARCHITECTS, P.C.

KEYNOTES: (#)

1. ROUTE VIA HOOD CONTROL UNIT.
2. CONNECT TO LIGHTING CONTROL SYSTEM TO PROVIDE TIME CLOCK FUNCTION.
3. APPROXIMATE LOCATION OF WALK IN CONDENSORS. SEE ENLARGED KITCHEN PLAN FOR CIRCUITING REQUIREMENTS.

1 ELECTRICAL POWER ROOF PLAN - RESTAURANT

3/16" = 1'-0"

IMEG
9000 E PIMA CENTER PARKWAY
SUITE 330
SCOTTSDALE, AZ 85258
P: 480.222.3771
www.imegcorp.com

IMEG CORP. RESERVES PROPRIETARY RIGHTS, INCLUDING COPYRIGHTS, TO THIS DRAWING AND THE DATA SHOWN THEREON. SAID DRAWING AND/OR DATA ARE THE EXCLUSIVE PROPERTY OF IMEG CORP. AND SHALL NOT BE USED OR REPRODUCED FOR ANY OTHER PROJECT WITHOUT THE EXPRESS WRITTEN APPROVAL AND PARTICIPATION OF IMEG CORP. ©2023 IMEG CORP.

0 1 2 3
REF. SCALE IN INCHES

PROJECT #23002327.00

STAMP

DYRON MURPHY ARCHITECTS, P.C.

4505 Montbel Place NE, Albuquerque, New Mexico 87107

SHIPROCK PINNACLE HOTEL & RESTAURANT

SHIPROCK, NEW MEXICO

100% CONSTRUCTION DOCUMENTS

ISSUED FOR CONSTRUCTION

NOVEMBER 3, 2023

PROJECT NUMBER	DRAWN BY	PROJ MGR
2022.10	IMEG	IMEG

ELECTRICAL ROOF PLAN - RESTAURANT

Sheet Title

Sheet Number of

E113

11/1/2023 11:09:29 AM Autodesk Docs://23002327.00 - Shiprock Pinnacle Hotel & Restaurant/MEP22_23002327.00_Shiprock Pinnacle Restaurant_C.rvt
DYRON MURPHY ARCHITECTS, P.C.

KEYNOTES: #

1. PROVIDE 1" CONDUIT TO ACCESSIBLE CEILING SPACE FOR EACH DATA ROUGH-IN LOCATION.
2. GAS SHUT OFF TO VALVE TO CLOSE UPON FIRE DETECTION. CONNECT VIA HOOD CONTROL UNIT.
3. WALK IN CONDENSING UNITS LOCATED ON ROOF. SHOWN HERE FOR CIRCUITING REFERENCE ONLY. SEE FOOD SERVICE PLANS FOR FINAL LOCATIONS.

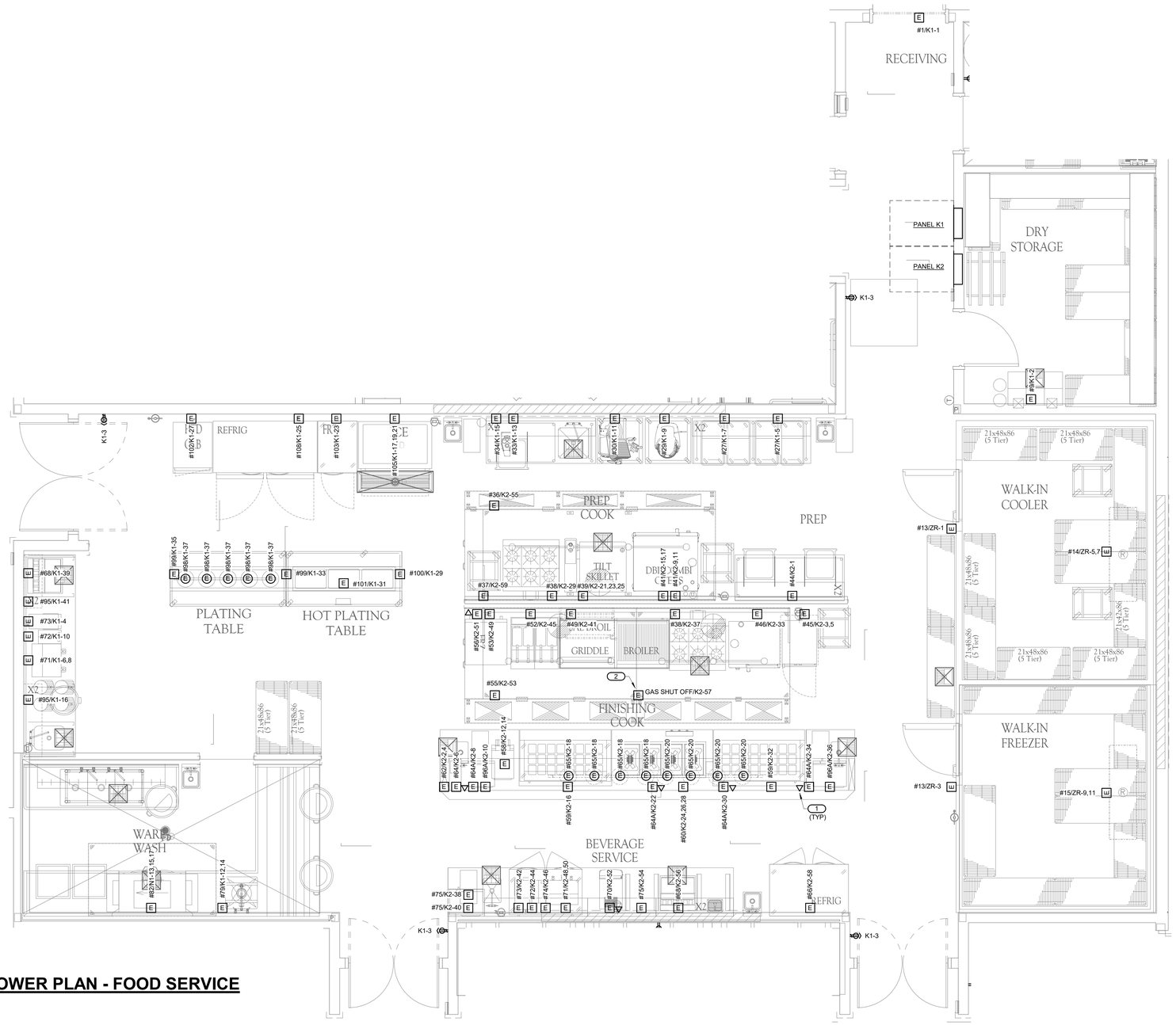

1 **ENLARGED POWER PLAN - FOOD SERVICE**
3/8" = 1'-0"

IMEG
9000 E PIMA CENTER PARKWAY
SUITE 320
SCOTTSDALE, AZ 85258
P: 480.222.3771
www.imegcorp.com

IMEG CORP. RESERVES PROPRIETARY RIGHTS, INCLUDING COPYRIGHTS, TO THIS DRAWING AND THE DATA SHOWN THEREON. SAID DRAWING AND/OR DATA ARE THE EXCLUSIVE PROPERTY OF IMEG CORP. AND SHALL NOT BE USED OR REPRODUCED FOR ANY OTHER PROJECT WITHOUT THE EXPRESS WRITTEN APPROVAL AND PARTICIPATION OF IMEG CORP. ©2023 IMEG CORP.

0 1 2 3
REF. SCALE IN INCHES
PROJECT #23002327.00

STAMP

DYRON MURPHY ARCHITECTS, P.C.
4505 Montbel Place NE, Albuquerque, New Mexico 87107

SHIPROCK PINNACLE HOTEL & RESTAURANT

SHIPROCK, NEW MEXICO

100% CONSTRUCTION DOCUMENTS

ISSUED FOR CONSTRUCTION

NOVEMBER 3, 2023

PROJECT NUMBER	DRAWN BY	PROJ MGR
2022.10	IMEG	IMEG

ENLARGED POWER PLAN - RESTAURANT

Sheet Title

Sheet Number of

E400

11/1/2023 11:00:30 AM Autodesk Docs://23002327.00 - Shiprock Pinnacle Hotel & Restaurant/MEP/2_23002327.00_Shiprock Pinnacle Restaurant_C.rvt
DYRON MURPHY ARCHITECTS, P.C.

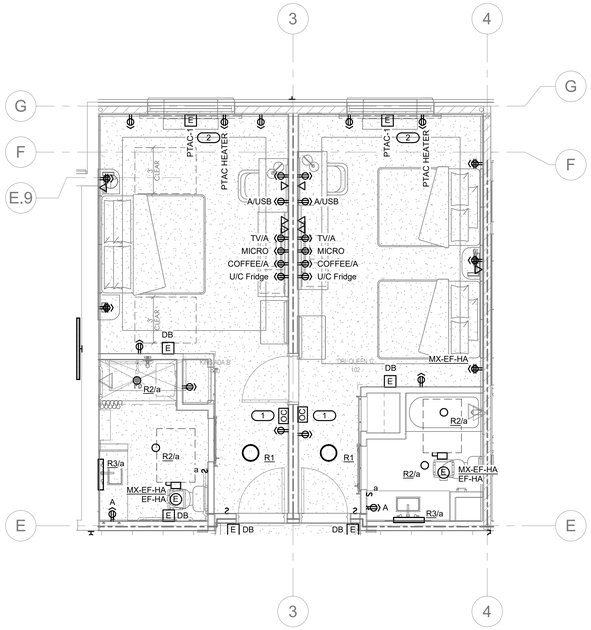

1 ELECTRICAL UNIT PLAN - ADA KN1
1/4" = 1'-0"

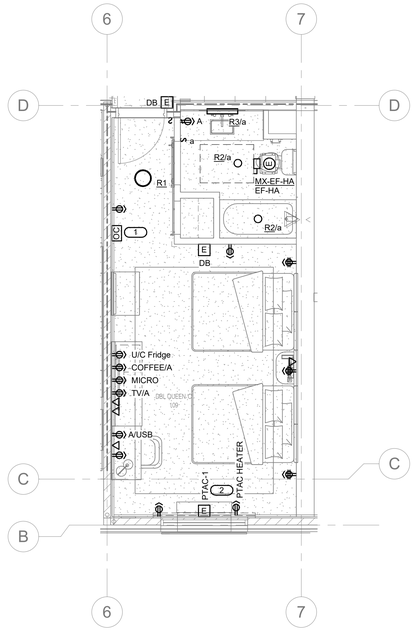

3 ELECTRICAL PLAN - DBL QN1
1/4" = 1'-0"

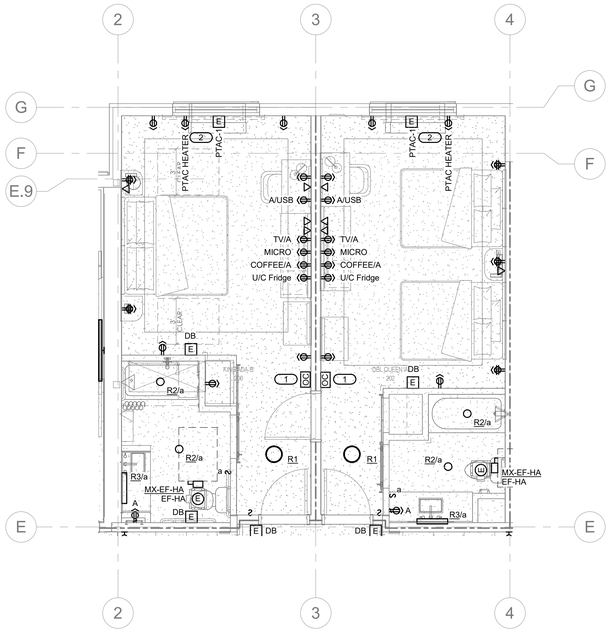

5 ELECTRICAL UNIT PLAN - KN ADA2
1/4" = 1'-0"

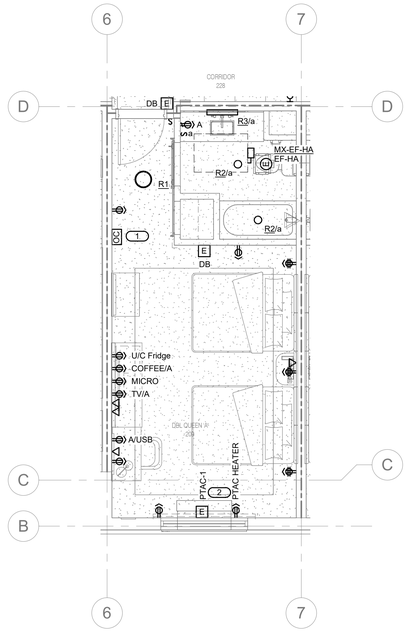

7 ELECTRICAL UNIT PLAN - DBL QN2
1/4" = 1'-0"

SHEET NOTES:

1. THE FOLLOWING BRANCH CIRCUITS SERVE GUEST ROOM LOADS AS NOTED. REFER TO OVERALL PLANS FOR GUESTROOM CIRCUIT DESIGNATIONS.:

   H1: REPRESENTS GENERAL RECEPTACLE/LIGHTING CIRCUIT.
   H2: REPRESENTS BATHROOM RECEPTACLE/LIGHTING CIRCUIT.
   H3: REPRESENTS COFFEE CIRCUIT.
   H4: REPRESENTS MICROWAVE CIRCUIT.

2. CONNECT ALL FIRE ALARM DEVICE TO GENERAL CIRCUIT H1.
3. ALL RECEPTACLES WITHING GUESTROOM ARE TO BE ARC FAULT INTERUPTING AND TAMPER PROOF.
4. CONNECT BATHROOM EXHAUST FANS DOWNSTREAM OF LIGHTING OCCUPANCY SWITCH.

KEYNOTES: (#)

1. MASTER SWITCH WITH OCCUPANCY SENSING. CONNECT ALL LIGHTING OUTSIDE OF RESTROOM AND SWITCHED RECEPTACLES VIA MASTER SWITCH.
2. DUAL POINT OF CONNECTION PTAC. COORDINATE FINAL CONNECTION REQUIREMENTS PER MANUFACTURER CUTSHEET. REFER TO OVERALL PLANS FOR CIRCUIT INFORMATION.

IMEG
9000 E PIMA CENTER PARKWAY
SUITE 320
SCOTTSDALE, AZ 85258
P: 480.222.3771
www.imegcorp.com

IMEG CORP. RESERVES PROPRIETARY RIGHTS, INCLUDING COPYRIGHTS, TO THIS DRAWING AND THE DATA SHOWN THEREON. SAID DRAWING AND/OR DATA ARE THE EXCLUSIVE PROPERTY OF IMEG CORP. AND SHALL NOT BE USED OR REPRODUCED FOR ANY OTHER PROJECT WITHOUT THE EXPRESS WRITTEN APPROVAL AND PARTICIPATION OF IMEG CORP. ©2023 IMEG CORP.

0 1 2 3
REF. SCALE IN INCHES — PROJECT #23002327.00

STAMP

DYRON MURPHY ARCHITECTS, P.C.

4505 Montbel Place NE, Albuquerque, New Mexico 87107

SHIPROCK PINNACLE HOTEL & RESTAURANT

SHIPROCK, NEW MEXICO

100% CONSTRUCTION DOCUMENTS

ISSUED FOR CONSTRUCTION

NOVEMBER 3, 2023

PROJECT NUMBER	DRAWN BY	PROJ MGR
2022.10	IMEG	IMEG

ELECTRICAL UNIT PLANS

Sheet Title

Sheet Number of

E401

11/1/2023 1:01:07 PM Autodesk Docs://23002327.00 - Shiprock Pinnacle Hotel & Restaurant/MEP/2_23002327.00_Shiprock Pinnacle Hotel_C.rvt
DYRON MURPHY ARCHITECTS, P.C.

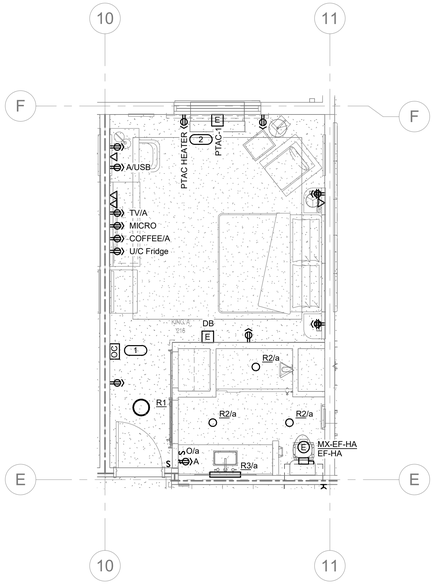

1 ELECTRICAL UNIT PLAN - KING

1/4" = 1'-0"

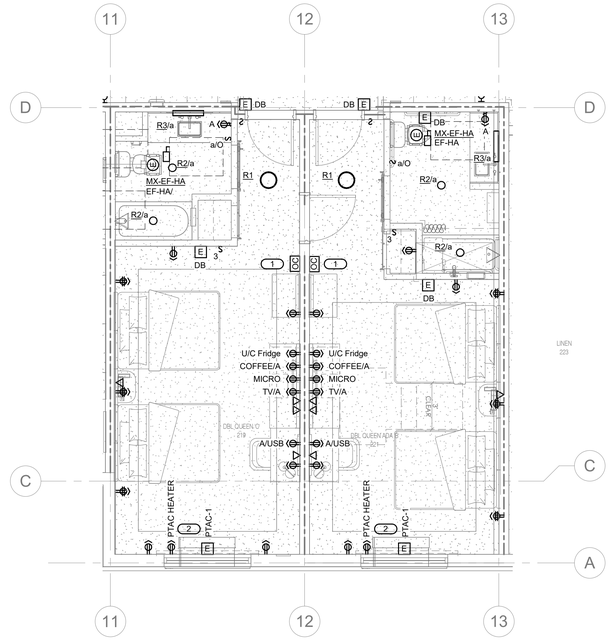

2 ELECTRICAL UNIT PLAN - DBL QN ADA2

1/4" = 1'-0"

SHEET NOTES:

1. THE FOLLOWING BRANCH CIRCUITS SERVE GUEST ROOM LOADS AS NOTED. REFER TO OVERALL PLANS FOR GUESTROOM CIRCUIT DESIGNATIONS.

   H1: REPRESENTS GENERAL RECEPTACLE/LIGHTING CIRCUIT.
   H2: REPRESENTS BATHROOM RECEPTACLE/LIGHTING CIRCUIT.
   H3: REPRESENTS COFFEE CIRCUIT.
   H4: REPRESENTS MICROWAVE CIRCUIT.

2. CONNECT ALL FIRE ALARM DEVICE TO GENERAL CIRCUIT H1.
3. ALL RECEPTACLES WITHING GUESTROOM ARE TO BE ARC FAULT INTERUPTING AND TAMPER PROOF.
4. CONNECT BATHROOM EXHAUST FANS DOWNSTREAM OF LIGHTING OCCUPANCY SWITCH.

KEYNOTES: (#)

1. MASTER SWITCH WITH OCCUPANCY SENSING. CONNECT ALL LIGHTING OUTSIDE OF RESTROOM AND SWITCHED RECEPTACLES VIA MASTER SWITCH.
2. DUAL POINT OF CONNECTION PTAC. COORDINATE FINAL CONNECTION REQUIREMENTS PER MANUFACTURER CUTSHEET. REFER TO OVERALL PLANS FOR CIRCUIT INFORMATION.

IMEG
9000 E PIMA CENTER PARKWAY
SUITE 320
SCOTTSDALE, AZ 85258
P: 480.222.3771
www.imegcorp.com

IMEG CORP. RESERVES PROPRIETARY RIGHTS, INCLUDING COPYRIGHTS, TO THIS DRAWING AND THE DATA SHOWN THEREON. SAID DRAWING AND/OR DATA ARE THE EXCLUSIVE PROPERTY OF IMEG CORP. AND SHALL NOT BE USED OR REPRODUCED FOR ANY OTHER PROJECT WITHOUT THE EXPRESS WRITTEN APPROVAL AND PARTICIPATION OF IMEG CORP. ©2023 IMEG CORP.

0 1 2 3
REF. SCALE IN INCHES

PROJECT #23002327.00

STAMP

DYRON MURPHY ARCHITECTS, P.C.

4505 Montbel Place NE, Albuquerque, New Mexico 87107

SHIPROCK PINNACLE HOTEL & RESTAURANT

SHIPROCK, NEW MEXICO

100% CONSTRUCTION DOCUMENTS

ISSUED FOR CONSTRUCTION

NOVEMBER 3, 2023

PROJECT NUMBER	DRAWN BY	PROJ MGR
2022.10	IMEG	IMEG

ELECTRICAL UNIT PLANS

Sheet Title

Sheet Number of

E402

11/1/2023 1:02:00 PM
Autodesk Docs://23002327.00 - Shiprock Pinnacle Hotel & Restaurant/MEP/2_23002327.00_Shiprock Pinnacle Hotel_C.rvt
DYRON MURPHY ARCHITECTS, P.C.

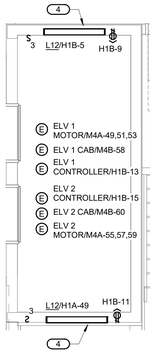

2 ENLARGED ELECTRICAL ELEVATOR - TOP OF SHAFT
1/4" = 1'-0"

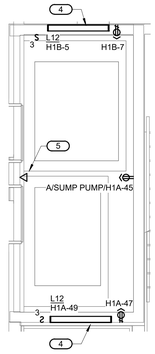

1 ENLARGED ELECTRICAL ELEVATOR - PIT
1/4" = 1'-0"

KEYNOTES: (#)

1. PROVIDE 3/4"X8'X RUN LENGTH PER PLAN A/C FIRE TREATED, PAINTED BACKBOARD. BOND TELEPONE BACKGROUND WITH #6 INSULATED GROUNDING CONDUCTOR VIA GROUND BUS.
2. TELECOM GROUNG BUS: PROVIDE 12"X2"X1/4" CU GROUND BAR. REFER TO GROUNDING DIAGRAM FOR MORE INFORMATION.
3. PROVIDE (1) 1" CONDUIT FOR POWER AND (1) 1-1/2 CONDUIT FOR LOW VOLTAGE TO ISLAND.
4. PROVIDE GFCI RECEPTACLE, SWITCH AND STRIP LIGHTING WITH WIREGUARD. LOCATE IN ELEVATOR PIT/SHAFT AS DIRECTED BY ELEVATOR CONTRACTOR.
5. PROVIDE LOW VOLTAGE CONNECTIONS PER MANUFACTURER'S REQUIRMENTS TO ELEVATORS.
6. PROVIDE CAST IRON IN GRADE FLOOR BOX WITH 2" KNOCK OUTS, FLUSH PASS THRU COVER, (2) DUPLEX RECEPTACLES AND (4) DATA PORTS. PROVIDE (1) 2" CONDUITS TO NEAREST ACCESSIBLE CEILING SPACE FOR LOW VOLTAGE CABLING. WIREMOLD RFB OR APPROVED EQUAL.
7. DEVICES MOUNTED IN MILLWORK. COORDINATE EXACT LOCATION WITH OWNER/ARCHITECT PRIOR TO ROUGH-IN. (2) DUPLEX RECEPTACLES ABOVE COUNTER AND (2) DUPLEX RECEPTACLES BELOW.
8. CONNECT TO LIGHTING CONTROL SYSTEM TO PROVIDE TIME CLOCK FUNCTION.

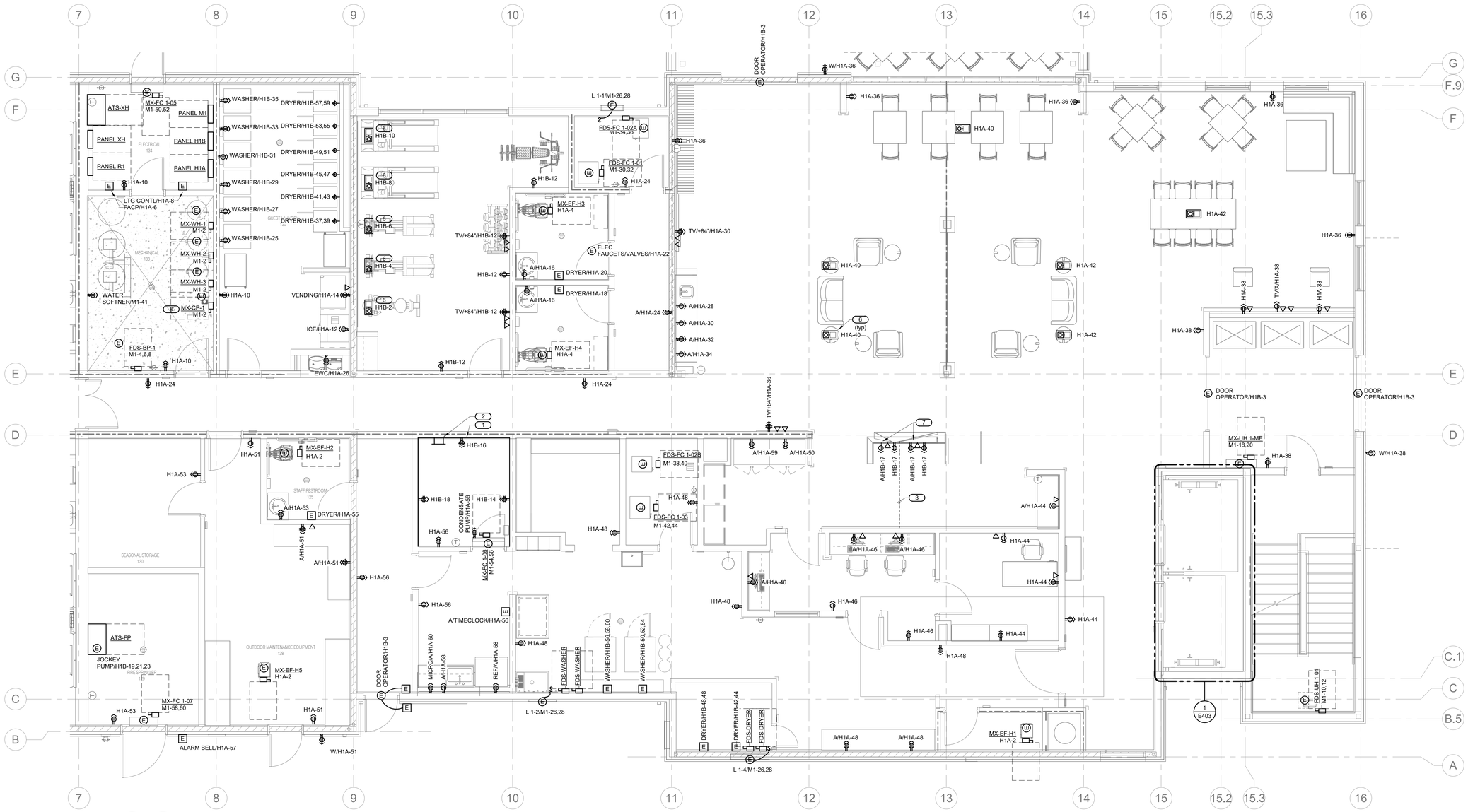

3 ENLARGED ELECTRICAL - LOBBY
1/4" = 1'-0"

NORTH

IMEG
9000 E PIMA CENTER PARKWAY
SUITE 320
SCOTTSDALE, AZ 85258
P: 480.222.3771
www.imegcorp.com

IMEG CORP. RESERVES PROPRIETARY RIGHTS, INCLUDING COPYRIGHTS, TO THIS DRAWING AND THE DATA SHOWN THEREON. SAID DRAWING AND/OR DATA ARE THE EXCLUSIVE PROPERTY OF IMEG CORP. AND SHALL NOT BE USED OR REPRODUCED FOR ANY OTHER PROJECT WITHOUT THE EXPRESS WRITTEN APPROVAL AND PARTICIPATION OF IMEG CORP. ©2023 IMEG CORP.

0 1 2 3
REF. SCALE IN INCHES
PROJECT #23002327.00

STAMP

DYRON MURPHY ARCHITECTS, P.C.
4505 Montbel Place NE, Albuquerque, New Mexico 87107

SHIPROCK PINNACLE HOTEL & RESTAURANT

SHIPROCK, NEW MEXICO

100% CONSTRUCTION DOCUMENTS

ISSUED FOR CONSTRUCTION

NOVEMBER 3, 2023

PROJECT NUMBER	DRAWN BY	PROJ MGR
2022.10	IMEG	IMEG

ELECTRICAL ENLARGED PLANS

Sheet Title

Sheet Number of

E403

11/1/2023 1:02:03 PM Autodesk Docs://23002327.00 - Shiprock Pinnacle Hotel & Restaurant/MEP/2_23002327.00_Shiprock Pinnacle Hotel_C.rvt
DYRON MURPHY ARCHITECTS, P.C.

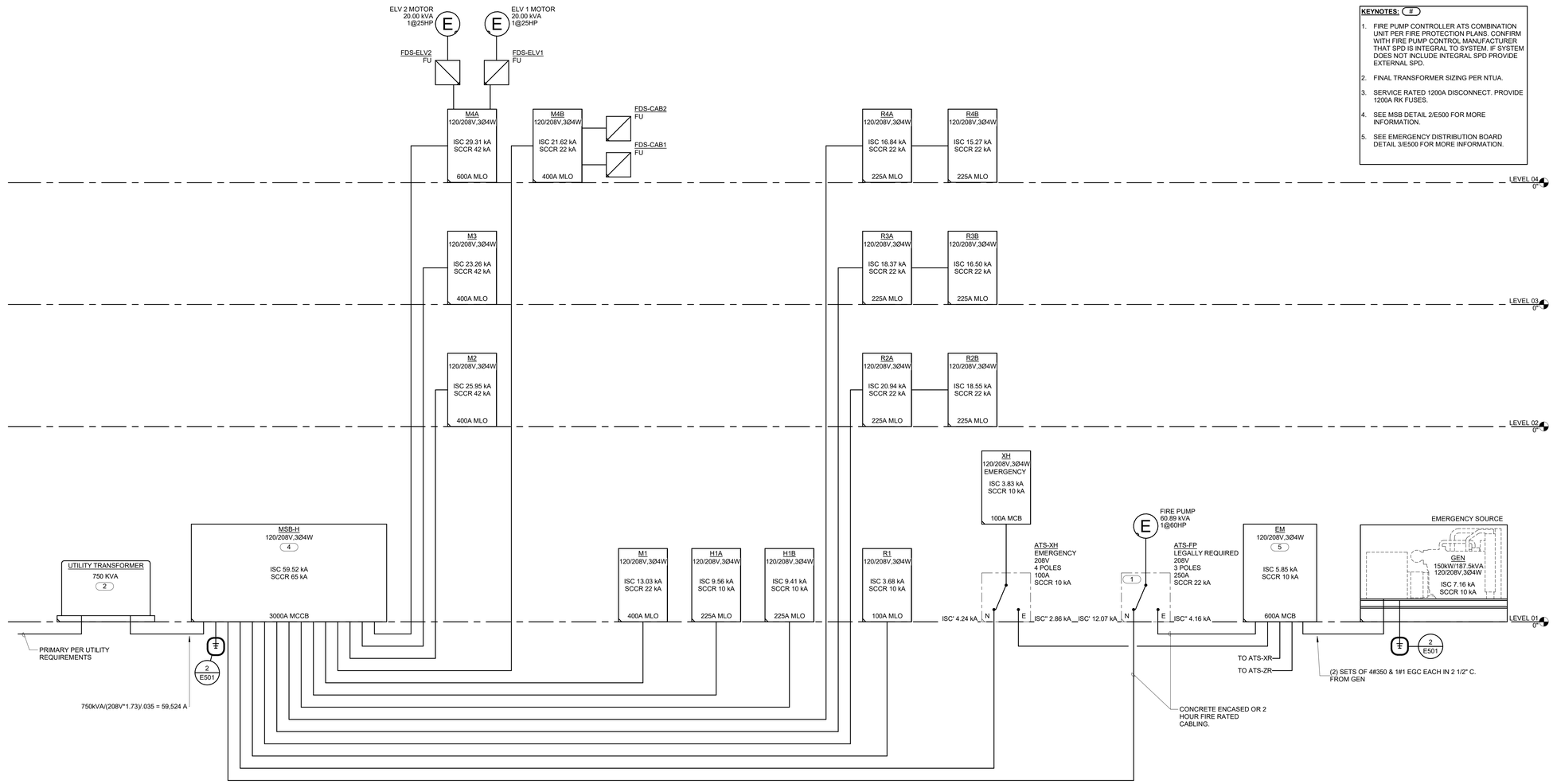

1 RISER DIAGRAM
NO SCALE

KEYNOTES: (#)

1. FIRE PUMP CONTROLLER ATS COMBINATION UNIT PER FIRE PROTECTION PLANS. CONFIRM WITH FIRE PUMP CONTROL MANUFACTURER THAT SPD IS INTEGRAL TO SYSTEM. IF SYSTEM DOES NOT INCLUDE INTEGRAL SPD PROVIDE EXTERNAL SPD.
2. FINAL TRANSFORMER SIZING PER NTUA.
3. SERVICE RATED 1200A DISCONNECT. PROVIDE 1200A RK FUSES.
4. SEE MSB DETAIL 2/E500 FOR MORE INFORMATION.
5. SEE EMERGENCY DISTRIBUTION BOARD DETAIL 3/E500 FOR MORE INFORMATION.

ELECTRICAL - RISER DIAGRAM NOTES:

1. THE RISER DIAGRAM IS INTENDED TO CONVEY THE COMPONENTS OF THE ELECTRICAL DISTRIBUTION SYSTEM. REFER TO ELECTRICAL DRAWINGS, DETAILS, DISTRIBUTION / PANEL / EQUIPMENT / EQUIPMENT CONNECTION SCHEDULES, AND SPECIFICATIONS FOR ADDITIONAL INFORMATION.
2. SHORT CIRCUIT CURRENT RATINGS (SCCR) FOR EQUIPMENT ARE MINIMUM REQUIREMENTS FOR BUSS BRACING AND DEVICE RATING. ALL EQUIPMENT SHALL BE FULLY RATED UNLESS SPECIFICALLY NOTED AS SERIES RATED.
3. TRANSFER SWITCHES (SCCR) RATINGS ARE INTENDED AS WITHSTAND AND CLOSE RATINGS (WCR).
4. THE BASIS OF DESIGN: THE CONTRACTOR SHALL BE RESPONSIBLE FOR DERATING AND SIZING CONDUCTORS AND CONDUITS TO EQUAL OR EXCEED AMPACITY OF THE BASIS OF DESIGN CIRCUITS WHEN ALTERNATIVE METHODS OR MATERIALS OTHER THAN THE BASIS OF DESIGN ARE APPLIED.
   a. RACEWAY: EMT UNLESS OTHERWISE NOTED
   b. FEEDER CHARACTERISTICS: ALL CURRENT CARRYING CONDUCTORS SHALL BE COPPER UNLESS NOTED OTHERWISE. CONDUCTOR SIZES ARE BASED ON AMERICAN WIRE GAUGE AWG AND KCMIL THOUSANDS OF CIRCULAR MIL. REFER TO SPECIFICATION SECTION 25 05 13 WIRE AND CABLE FOR ADDITIONAL INFORMATION
   c. GROUNDING AND BONDING CONDUCTORS SHALL BE COPPER.
   d. CONDUCTORS (MOTORS): COPPER
   e. CONDUCTOR LENGTHS LISTED IN RISER DIAGRAMS AND SCHEDULES ARE FOR ENGINEERING CALCULATIONS AND SHALL NOT BE USED FOR BIDDING PURPOSES.
   f. [AL] INDICATES ALUMINUM CONDUCTOR
   g. [BLANK] OR [CU] INDICATES COPPER CONDUCTOR
   h. [CI] INDICATES CIRCUIT INTEGRITY CIRCUIT. FEEDER ROUTED OUTSIDE BUILDING OR 2 HOUR FIRE RATED.
5. PROVIDE GROUNDING ELECTRODE AND BONDING SYSTEM PER CODE REQUIREMENTS. PROVIDE THE FOLLOWING MINIMUM CONNECTIONS AND COMPONENTS. REFER TO SPECIFICATION SECTION 26 05 26 GROUNDING AND BONDING AND DETAILS WHEN APPLICABLE:
   a. ELECTRICAL GROUND FIELD
   b. CONCRETE-ENCASED GROUNDING ELECTRODE (UFER)
   c. METALLIC WATER MAIN
   d. BUILDING STEEL, EFFECTIVELY GROUNDED
   e. INTERSYSTEM BONDING TERMINAL [IBT]
   f. GROUND RING ENCIRCLING STRUCTURE
6. DRY TYPE TRANSFORMER AND SEPARATELY DERIVED SYSTEMS. PROVIDE GROUNDING ELECTRODE CONDUCTOR FOR SEPARATELY DERIVED SYSTEM. ROUTE TO STRUCTURAL BUILDING STEEL WHEN AVAILABLE. OTHERWISE ROUTE TO MAIN GROUNDING ELECTRODE SYSTEM.
7. PROVIDE O.Z. GEDNEY OR EQUAL GROUND BUSHING FOR ALL SERVICE AND FEEDER RACEWAYS BONDED TO GROUND BUS WITH CONDUCTOR SIZED TO MAXIMUM FEEDER GROUND CAPACITY.
8. CONDUCTORS AND GROUND SIZES ON THE LINE AND LOAD SIDES OF ALL DISCONNECT SWITCHES SHALL BE IDENTICAL UNLESS NOTED OTHERWISE.
9. REFER TO COVER SHEET FOR ADDITIONAL EQUIPMENT TAG INFORMATION (SPD-#, M-#, ETC).
10. REFER TO GROUNDING ELECTRODE SYSTEM AND BONDING DETAILS
    a. EGC – EQUIPMENT GROUNDING CONDUCTOR
    b. GEC – GROUNDING ELECTRODE CONDUCTOR
    c. SSBJ – SUPPLY SIDE BONDING JUMPER
11. CIRCUIT BREAKER CHARACTERISTICS AND ACCESSORIES:
    a. [CB] INDICATES CIRCUIT BREAKER
    b. [FU] INDICATES FUSED SWITCH
    c. [NF] INDICATES NON-FUSED SWITCH
    d. [MLO] INDICATES MAIN LUG ONLY
    e. [MCB] INDICATES MAIN CIRCUIT BREAKER
    f. [MCCB] INDICATES MOLDED CASE CIRCUIT BREAKER
    g. [LSIG] INDICATES FEATURES PROVIDED WITH SOLID STATE CIRCUIT BREAKER [LONG TIME (W/DELAY), SHORT TIME (W/DELAY), INSTANTANEOUS, GROUND FAULT]
    h. [LSIA] INDICATES FEATURES PROVIDED WITH SOLID STATE CIRCUIT BREAKER [LONG TIME (W/DELAY), SHORT TIME (W/DELAY), INSTANTANEOUS, GROUND FAULT ALARM (NO GROUND FAULT TRIP)]
    i. [GF] INDICATES GROUND FAULT RELAY
    j. [AER] INDICATES ARC ENERGY REDUCTION SYSTEM
    k. [100% RATED] INDICATES INSULATED CASE BREAKER RATED FOR FULL CONTINUOUS CAPACITY OF CIRCUIT BREAKER NAMEPLATE
    l. [DRAW] INDICATES DRAWOUT DEVICES
    m. [LOCK] INDICATES PADLOCK HASP
    n. [RED] INDICATES RED HANDLE
    o. [SHUNT] INDICATES SHUNT TRIP BREAKER
    p. [KIRK] CAPTURED KEY INTERLOCK SWITCH

ELECTRICAL DISTRIBUTION AND PANEL SCHEDULE NOTES:

1. BRANCH PANEL KEY:
   a. *A = ARC FAULT CIRCUIT INTERRUPT
   b. *G = GROUND FAULT CIRCUIT INTERRUPT
   c. *I = ISOLATED GROUND
   d. *M = BRANCH CIRCUIT MONITOR
   e. *P = PADLOCK HASP
   f. *R = RED HANDLE
   g. *S = SHUNT TRIP
   h. *NB = NEW BREAKER
   i. *RB = REPLACE EXISTING BREAKER WITH NEW BREAKER
   j. *EB = EXISTING BREAKER

ELECTRICAL DISTRIBUTION SCHEDULE

ITEM	VOLTAGE	MAINS RATING / XFMR RATING	FEEDER: UPSTREAM OCPD OR TERMINATION	FEEDER: WIRE AND RACEWAY	CIRCUIT LENGTH	CONNECTED LOAD	ESTIMATED DEMAND LOAD	CONNECTED CURRENT	ESTIMATED DEMAND CURRENT	ESTIMATED ISC	SCCR	VOLTAGE DROP: FEEDERS: FEEDER VOLTAGE DROP	VOLTAGE DROP: FEEDERS: UPSTREAM FEEDERS VOLTAGE DROP	VOLTAGE DROP: FEEDERS: TOTAL FEEDER VOLTAGE DROP	VOLTAGE DROP: BRANCH CIRCUITS: MAX BRANCH VOLTAGE DROP	VOLTAGE DROP: BRANCH CIRCUITS: TOTAL VOLTAGE DROP AT MAX BRANCH
MSB-H	120/208V, 3Ø4W	3,000 A MCCB	3,000 A	(8) SETS OF 4#500 & 1#1/0 SSBJ EACH IN 3" C.	72'-9 43/64"	880.53 kVA	834.21 kVA	2,444.1 A	2,315.5 A	59.52 kA	65 kA	0.86%		0.86%		0.86%
M4A	120/208V, 3Ø4W	600 A MLO	600 A	(2) SETS OF 4#350 & 1#1 EGC EACH IN 2 1/2" C.	68'-0 7/8"	139.06 kVA	139.06 kVA	386 A	386 A	29.31 kA	42 kA	0.77%	0.86%	1.63%	2.79%	4.42%
M4B	120/208V, 3Ø4W	400 A MLO	400 A	4#600 & 1#3 EGC IN 3 1/2" C.	65'-6 7/8"	69.23 kVA	69.23 kVA	192.2 A	192.2 A	21.62 kA	22 kA	0.76%	0.86%	1.62%	2.99%	4.61%
M3	120/208V, 3Ø4W	400 A MLO	400 A	4#600 & 1#3 EGC IN 3 1/2" C.	58'-3 17/256"	66.84 kVA	66.84 kVA	185.5 A	185.5 A	23.26 kA	42 kA	0.67%	0.86%	1.53%	3.00%	4.53%
M2	120/208V, 3Ø4W	400 A MLO	400 A	4#600 & 1#3 EGC IN 3 1/2" C.	48'-3 233/256"	66.84 kVA	66.84 kVA	185.5 A	185.5 A	25.95 kA	42 kA	0.56%	0.86%	1.42%	2.99%	4.41%
M1	120/208V, 3Ø4W	400 A MLO	400 A	4#600 & 1#3 EGC IN 3 1/2" C.	135'-0 121/128"	120.26 kVA	120.26 kVA	333.8 A	333.8 A	13.03 kA	22 kA	1.56%	0.86%	2.42%	2.50%	4.92%
H1A	120/208V, 3Ø4W	225 A MLO	225 A	4#4/0 & 1#4 EGC IN 2 1/2" C.	130'-0 9/16"	35.66 kVA	31.07 kVA	99 A	86.2 A	9.56 kA	10 kA	1.54%	0.86%	2.40%	2.88%	5.28%
H1B	120/208V, 3Ø4W	225 A MLO	225 A	4#4/0 & 1#4 EGC IN 2 1/2" C.	132'-6 121/128"	65.64 kVA	65.02 kVA	182.2 A	180.5 A	9.41 kA	10 kA	1.57%	0.86%	2.43%	2.59%	5.02%
R1	120/208V, 3Ø4W	100 A MLO	100 A	4#3 & 1#8 EGC IN 1 1/4" C.	119'-1 193/256"	28.57 kVA	25.29 kVA	79.3 A	70.2 A	3.68 kA	10 kA	1.99%	0.86%	2.85%	2.30%	5.15%
R2A	120/208V, 3Ø4W	225 A MLO	225 A	4#4/0 & 1#4 EGC IN 2 1/2" C.	45'-10 123/256"	74.09 kVA	65.85 kVA	205.6 A	182.8 A	20.94 kA	22 kA	0.54%	0.86%	1.40%	2.95%	4.35%
R2B	120/208V, 3Ø4W	225 A MLO	225 A	4#4/0 & 1#4 EGC IN 2 1/2" C.	9'-1 23/256"	39.99 kVA	35.39 kVA	111 A	98.2 A	18.55 kA	22 kA	0.11%	1.40%	1.51%	2.99%	4.50%
R3A	120/208V, 3Ø4W	225 A MLO	225 A	4#4/0 & 1#4 EGC IN 2 1/2" C.	55'-9 17/256"	74.11 kVA	65.86 kVA	205.7 A	182.8 A	18.37 kA	22 kA	0.66%	0.86%	1.52%	2.95%	4.47%
R3B	120/208V, 3Ø4W	225 A MLO	225 A	4#4/0 & 1#4 EGC IN 2 1/2" C.	9'-1 251/256"	40 kVA	35.40 kVA	111 A	98.3 A	16.50 kA	22 kA	0.11%	1.52%	1.63%	3.00%	4.63%
R4A	120/208V, 3Ø4W	225 A MLO	225 A	4#4/0 & 1#4 EGC IN 2 1/2" C.	63'-0 7/8"	76.51 kVA	68.26 kVA	212.4 A	189.5 A	16.84 kA	22 kA	0.75%	0.86%	1.61%	2.92%	4.53%
R4B	120/208V, 3Ø4W	225 A MLO	225 A	4#4/0 & 1#4 EGC IN 2 1/2" C.	9'-0 29/32"	40 kVA	35.40 kVA	111 A	98.3 A	15.27 kA	22 kA	0.11%	1.61%	1.72%	2.96%	4.68%
ATS-XH	120/208V, 3Ø4W	100 A	100 A NORMAL, 100 A	4#2 & 1#6 EGC IN 1 1/4" C. NORMAL, 4#2/0 & 1#3 EGC IN 2" C. STANDBY	261'-2 229/256"	2.84 kVA	2.84 kVA	7.9 A	7.9 A	4.24 kA NORMAL, 2.86 kA STANDBY	10 kA	1.75%	0.86%	2.61%		2.61%
XH	120/208V, 3Ø4W	100 A MCB	100 A	4#3 & 1#8 EGC IN 1 1/4" C.	12'-1 3/256"	2.84 kVA	2.84 kVA	7.9 A	7.9 A	3.83 kA	10 kA	0.20%	2.61%	2.81%	2.14%	4.95%
ATS-FP	208V, 3Ø3W	250 A	1,200 A NORMAL, 250 A	3#250 & 1#4 EGC IN 2 1/2" C. NORMAL, 3#250 & 1#4 EGC IN 2" C. STANDBY	310'-0 19/64"	60.89 kVA	60.89 kVA	169 A	169 A	12.07 kA NORMAL, 4.16 kA STANDBY	22 kA		0.86%	0.86%	0.21%	1.07%

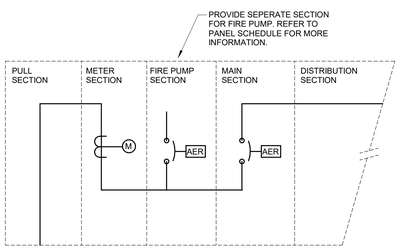

2 MSB DETAIL
NO SCALE

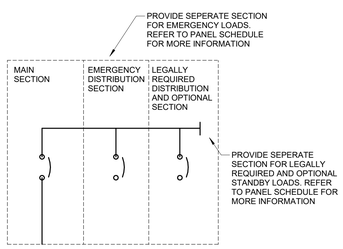

3 EMERGENCY DISTRIBUITION BOARD DETAIL
NO SCALE

TRANSFER SWITCH SCHEDULE

SWITCH TYPE:	ACCESSORIES & OPTIONS
AUTO - AUTOMATIC	EE - ENGINE EXERCISER
B/I - AUTOMATIC WITH BYPASS ISOLATION	IM - IN-PHASE MONITOR
MAN - MANUAL OPERATION	SH - STRIP HEATER WITH THERMOSTAT
PGLB - PORTABLE GENERATOR & LOAD BANK CABINET	RM - REMOTE ANNUNCIATOR
STAT - STATIC SOLID STATE	RC - REMOTE CONTROL CIRCUITS
SWITCH CONFIGURATION (CONFIG):	EL - ELEVATOR EMERGENCY TO NORMAL PRESIGNAL
CT - CLOSED TRANSITION	SP - SERIAL COMMUNICATIONS PORT
DT - DELAYED TRANSITION - CENTER OFF	PM - POWER MONITORING METER
30 - 30 CYCLE WITHSTAND RATING	RTC - REMOTE TRANSFER CONTROL FROM FIRE COMMAND CENTER
SE - SERVICE ENTRANCE LISTED	RMC - REMOTE ANNUNCIATION AT FIRE COMMAND CENTER
SN - SWITCHED NEUTRAL	TI - TRANSFER INHIBIT
ON - OVERLAPPING SWITCHED NEUTRAL	LS - LOAD SHED (PROVIDE DELAYED TRANSISTION - CENTER OFF CONFIGURATION)
DN - SOLID NEUTRAL	

ITEM	SWITCH: TYPE AND CONFIG	SWITCH: VOLTAGE	SWITCH: POLES	SWITCH: AMPS	SWITCH: SCCR	ENCLOSURE	REQUIRED ACCESSORIES & OPTIONS	BRANCH	COMMENTS
ATS-FP	AUTO, ON	208 V	3	250 A	22 kA	NEMA 1	EE, RM	LEGALLY REQUIRED	COMBINATION FIRE PUMP CONTROLLER AND TRANSFER SWITCH PER FIRE PROTECTION PLANS.
ATS-XH	AUTO, ON	208 V	4	100 A	10 kA	NEMA 1	EE, RM	EMERGENCY	
ATS-XR	AUTO, ON	208 V	4	100 A	10 kA	NEMA 1	EE, RM	EMERGENCY	
ATS-ZR	AUTO, ON	208 V	4	100 A	10 kA	NEMA 1	EE, RM	OPTIONAL STANDBY	

IMEG
5900 E PIMA CENTER PARKWAY
SUITE 320
SCOTTSDALE, AZ 85258
P: 480.222.3771
www.imegcorp.com
IMEG CORP. RESERVES PROPRIETARY RIGHTS, INCLUDING COPYRIGHTS, TO THIS DRAWING AND THE DATA SHOWN THEREON. SAID DRAWING AND/OR DATA ARE THE EXCLUSIVE PROPERTY OF IMEG CORP. AND SHALL NOT BE USED OR REPRODUCED FOR ANY OTHER PROJECT WITHOUT THE EXPRESS WRITTEN APPROVAL AND PARTICIPATION OF IMEG CORP. ©2023 IMEG CORP.
REF. SCALE IN INCHES — PROJECT #23002327.00

STAMP

DYRON MURPHY ARCHITECTS, P.C.
4505 Montbel Place NE, Albuquerque, New Mexico 87107

SHIPROCK PINNACLE HOTEL & RESTAURANT

SHIPROCK, NEW MEXICO

100% CONSTRUCTION DOCUMENTS

ISSUED FOR CONSTRUCTION

NOVEMBER 3, 2023

PROJECT NUMBER	DRAWN BY	PROJ MGR
2022.10	IMEG	IMEG

ELECTRICAL RISER DIAGRAM - HOTEL

Sheet Title

Sheet Number of

E500

Autodesk Docs://23002327.00 - Shiprock Pinnacle Hotel & Restaurant/MEP22_23002327.00_Shiprock Pinnacle Hotel_C.rvt
11/1/2023 1:02:04 PM
DYRON MURPHY ARCHITECTS, P.C.

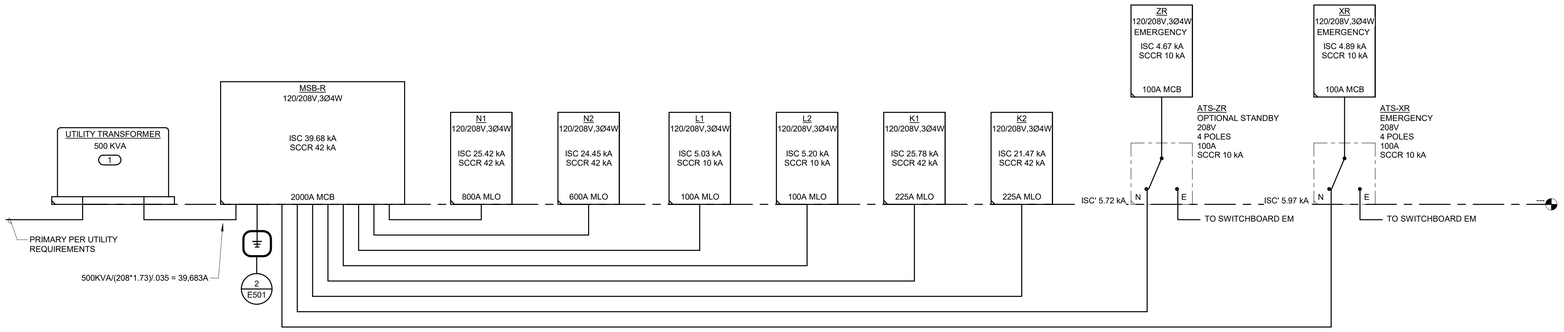

KEYNOTES: (#)

1. FINAL TRANSFORMER SIZING PER NTUA.

1 RISER DIAGRAM

NO SCALE

ELECTRICAL DISTRIBUTION SCHEDULE

ITEM	VOLTAGE	MAINS RATING / XFMR RATING	FEEDER: UPSTREAM OCPD OR TERMINATION	FEEDER: WIRE AND RACEWAY	CIRCUIT LENGTH	CONNECTED LOAD	ESTIMATED DEMAND LOAD	CONNECTED CURRENT	ESTIMATED DEMAND CURRENT	ESTIMATED ISC	SCCR	VOLTAGE DROP: FEEDERS: FEEDER VOLTAGE DROP	VOLTAGE DROP: FEEDERS: UPSTREAM FEEDERS VOLTAGE DROP	VOLTAGE DROP: FEEDERS: TOTAL FEEDER VOLTAGE DROP	VOLTAGE DROP: BRANCH CIRCUITS: MAX BRANCH VOLTAGE DROP	VOLTAGE DROP: BRANCH CIRCUITS: TOTAL VOLTAGE DROP AT MAX BRANCH
MSB-R	120/208V, 3Ø4W	2,000 A MCB	2,000 A	(5) SETS OF 4#600 & 1#1/0 SSBJ EACH IN 3 1/2" C.	102'-10 47/64"	607.97 kVA	541.46 kVA	1,687.6 A	1,502.9 A	39.68 kA	42 kA	1.19%		1.19%		1.19%
N1	120/208V, 3Ø4W	800 A MLO	800 A	(2) SETS OF 4#600 & 1#1/0 EGC EACH IN 3 1/2" C.	68'-1 87/128"	247.77 kVA	233.81 kVA	687.8 A	649 A	25.42 kA	42 kA	0.80%	1.19%	1.99%	1.82%	3.81%
N2	120/208V, 3Ø4W	600 A MLO	600 A	(2) SETS OF 4#350 & 1#1 EGC EACH IN 2 1/2" C.	66'-9 23/128"	184.79 kVA	184.79 kVA	512.9 A	512.9 A	24.45 kA	42 kA	0.76%	1.19%	1.95%	2.70%	4.65%
L1	120/208V, 3Ø4W	100 A MLO	100 A	4#3 & 1#8 EGC IN 1 1/4" C.	81'-9 217/256"	30.7 kVA	24.49 kVA	85.2 A	68 A	5.03 kA	10 kA	1.37%	1.19%	2.56%	2.87%	5.43%
L2	120/208V, 3Ø4W	100 A MLO	100 A	4#3 & 1#8 EGC IN 1 1/4" C.	79'-3 217/256"	15.18 kVA	15.18 kVA	42.1 A	42.1 A	5.20 kA	10 kA	1.32%	1.19%	2.51%	2.97%	5.48%
K1	120/208V, 3Ø4W	225 A MLO	225 A	4#4/0 & 1#4 EGC IN 2 1/2" C.	21'-11 17/128"	37.27 kVA	24.48 kVA	103.5 A	67.9 A	25.78 kA	42 kA	0.26%	1.19%	1.45%	2.79%	4.24%
K2	120/208V, 3Ø4W	225 A MLO	225 A	4#4/0 & 1#4 EGC IN 2 1/2" C.	33'-5 39/64"	72 kVA	46.80 kVA	199.9 A	129.9 A	21.47 kA	42 kA	0.40%	1.19%	1.59%	2.93%	4.52%
ATS-ZR	120/208V, 3Ø4W	100 A	100 A NORMAL, 0 A	4#3 & 1#8 EGC IN 1 1/4" C.	70'-6 137/256"	16.97 kVA	11.03 kVA	47.1 A	30.6 A	5.72 kA NORMAL, 0.00 kA STANDBY	10 kA	1.18%	1.19%	2.37%		2.37%
ZR	120/208V, 3Ø4W	100 A MCB	100 A	4#3 & 1#8 EGC IN 1 1/4" C.	18'-4 1/8"	16.97 kVA	11.03 kVA	47.1 A	30.6 A	4.67 kA	10 kA	0.31%	2.37%	2.68%	1.76%	4.44%
ATS-XR	120/208V, 3Ø4W	100 A	100 A NORMAL, 0 A	4#3 & 1#8 EGC IN 1 1/4" C.	67'-0 137/256"	3.29 kVA	3.29 kVA	9.1 A	9.1 A	5.97 kA NORMAL, 0.00 kA STANDBY	10 kA	1.12%	1.19%	2.31%		2.31%
XR	120/208V, 3Ø4W	100 A MCB	100 A	4#3 & 1#8 EGC IN 1 1/4" C.	17'-4 35/128"	3.29 kVA	3.29 kVA	9.1 A	9.1 A	4.89 kA	10 kA	0.29%	2.31%	2.60%	2.82%	5.42%

ELECTRICAL - RISER DIAGRAM NOTES:

1. THE RISER DIAGRAM IS INTENDED TO CONVEY THE COMPONENTS OF THE ELECTRICAL DISTRIBUTION SYSTEM. REFER TO ELECTRICAL DRAWINGS, DETAILS, DISTRIBUTION / PANEL / EQUIPMENT / EQUIPMENT CONNECTION SCHEDULES, AND SPECIFICATIONS FOR ADDITIONAL INFORMATION.
2. SHORT CIRCUIT CURRENT RATINGS (SCCR) FOR EQUIPMENT ARE MINIMUM REQUIREMENTS FOR BUSS BRACING AND DEVICE RATING. ALL EQUIPMENT SHALL BE FULLY RATED UNLESS SPECIFICALLY NOTED AS SERIES RATED.
3. TRANSFER SWITCHES (SCCR) RATINGS ARE INTENDED AS WITHSTAND AND CLOSE RATINGS (WCR).
4. THE BASIS OF DESIGN: THE CONTRACTOR SHALL BE RESPONSIBLE FOR DERATING AND SIZING CONDUCTORS AND CONDUITS TO EQUAL OR EXCEED AMPACITY OF THE BASIS OF DESIGN CIRCUITS WHEN ALTERNATIVE METHODS OR MATERIALS OTHER THAN THE BASIS OF DESIGN ARE APPLIED.
   a. RACEWAY: EMT UNLESS OTHERWISE NOTED
   b. FEEDER CHARACTERISTICS: ALL CURRENT CARRYING CONDUCTORS SHALL BE COPPER UNLESS NOTED OTHERWISE. CONDUCTOR SIZES ARE BASED ON AMERICAN WIRE GAUGE AWG AND KCMIL THOUSANDS OF CIRCULAR MIL. REFER TO SPECIFICATION SECTION 25 05 13 WIRE AND CABLE FOR ADDITIONAL INFORMATION
   c. GROUNDING AND BONDING CONDUCTORS SHALL BE COPPER.
   d. CONDUCTORS (MOTORS): COPPER
   e. CONDUCTOR LENGTHS LISTED IN RISER DIAGRAMS AND SCHEDULES ARE FOR ENGINEERING CALCULATIONS AND SHALL NOT BE USED FOR BIDDING PURPOSES.
   f. [AL] INDICATES ALUMINUM CONDUCTOR
   g. [BLANK] OR [CU] INDICATES COPPER CONDUCTOR
   h. [CI] INDICATES CIRCUIT INTEGRITY CIRCUIT. FEEDER ROUTED OUTSIDE BUILDING OR 2 HOUR FIRE RATED.
5. PROVIDE GROUNDING ELECTRODE AND BONDING SYSTEM PER CODE REQUIREMENTS. PROVIDE THE FOLLOWING MINIMUM CONNECTIONS AND COMPONENTS. REFER TO SPECIFICATION SECTION 26 05 26 GROUNDING AND BONDING AND DETAILS WHEN APPLICABLE:
   a. ELECTRICAL GROUND FIELD
   b. CONCRETE-ENCASED GROUNDING ELECTRODE (UFER)
   c. METALLIC WATER MAIN
   d. BUILDING STEEL, EFFECTIVELY GROUNDED
   e. INTERSYSTEM BONDING TERMINAL [IBT]
   f. GROUND RING ENCIRCLING STRUCTURE
6. DRY TYPE TRANSFORMER AND SEPARATELY DERIVED SYSTEMS. PROVIDE GROUNDING ELECTRODE CONDUCTOR FOR SEPARATELY DERIVED SYSTEM. ROUTE TO STRUCTURAL BUILDING STEEL WHEN AVAILABLE. OTHERWISE ROUTE TO MAIN GROUNDING ELECTRODE SYSTEM.
7. PROVIDE O.Z. GEDNEY OR EQUAL GROUND BUSHING FOR ALL SERVICE AND FEEDER RACEWAYS BONDED TO GROUND BUS WITH CONDUCTOR SIZED TO MAXIMUM FEEDER GROUND CAPACITY.
8. CONDUCTORS AND GROUND SIZES ON THE LINE AND LOAD SIDES OF ALL DISCONNECT SWITCHES SHALL BE IDENTICAL UNLESS NOTED OTHERWISE.
9. REFER TO COVER SHEET FOR ADDITIONAL EQUIPMENT TAG INFORMATION (SPD-#, M-#, ETC).
10. REFER TO GROUNDING ELECTRODE SYSTEM AND BONDING DETAILS
    a. EGC – EQUIPMENT GROUNDING CONDUCTOR
    b. GEC – GROUNDING ELECTRODE CONDUCTOR
    c. SSBJ – SUPPLY SIDE BONDING JUMPER
11. CIRCUIT BREAKER CHARACTERISTICS AND ACCESSORIES:
    a. [CB] INDICATES CIRCUIT BREAKER
    b. [FU] INDICATES FUSED SWITCH
    c. [NF] INDICATES NON-FUSED SWITCH
    d. [MLO] INDICATES MAIN LUG ONLY
    e. [MCB] INDICATES MAIN CIRCUIT BREAKER
    f. [MCCB] INDICATES MOLDED CASE CIRCUIT BREAKER
    g. [LSIG] INDICATES FEATURES PROVIDED WITH SOLID STATE CIRCUIT BREAKER [LONG TIME (W/DELAY), SHORT TIME (W/DELAY), INSTANTANEOUS, GROUND FAULT]
    h. [LSIA] INDICATES FEATURES PROVIDED WITH SOLID STATE CIRCUIT BREAKER [LONG TIME (W/DELAY), SHORT TIME (W/DELAY), INSTANTANEOUS, GROUND FAULT ALARM (NO GROUND FAULT TRIP)]
    i. [GF] INDICATES GROUND FAULT RELAY
    j. [AER] INDICATES ARC ENERGY REDUCTION SYSTEM
    k. [100% RATED] INDICATES INSULATED CASE BREAKER RATED FOR FULL CONTINUOUS CAPACITY OF CIRCUIT BREAKER NAMEPLATE
    l. [DRAW] INDICATES DRAWOUT DEVICES
    m. [LOCK] INDICATES PADLOCK HASP
    n. [RED] INDICATES RED HANDLE
    o. [SHUNT] INDICATES SHUNT TRIP BREAKER
    p. [KIRK] CAPTURED KEY INTERLOCK SWITCH

ELECTRICAL DISTRIBUTION AND PANEL SCHEDULE NOTES:

1. BRANCH PANEL KEY:
   a. *A = ARC FAULT CIRCUIT INTERRUPT
   b. *G = GROUND FAULT CIRCUIT INTERRUPT
   c. *I = ISOLATED GROUND
   d. *M = BRANCH CIRCUIT MONITOR
   e. *P = PADLOCK HASP
   f. *R = RED HANDLE
   g. *S = SHUNT TRIP
   h. *NB = NEW BREAKER
   i. *RB = REPLACE EXISTING BREAKER WITH NEW BREAKER
   j. *EB = EXISTING BREAKER

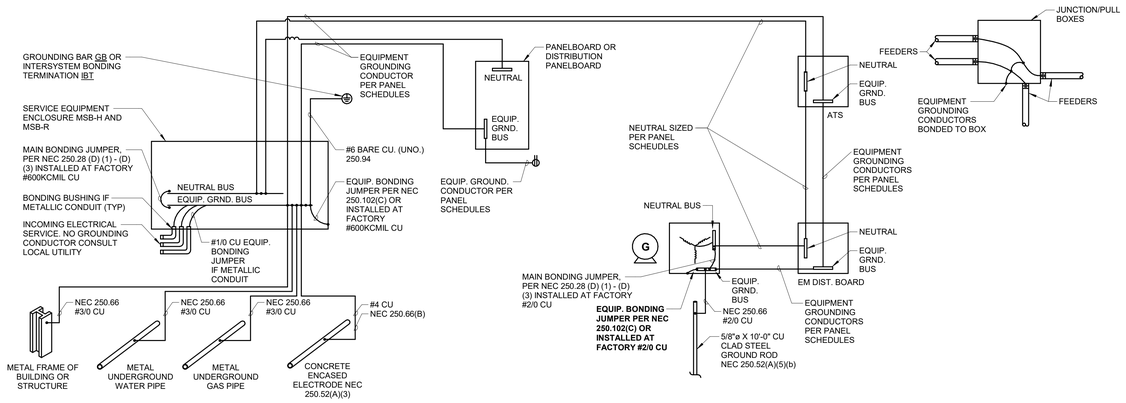

2 GROUNDING DIAGRAM

NO SCALE

IMEG
www.imegcorp.com
9000 E. PIMA CENTER PARKWAY
SUITE 320
SCOTTSDALE, AZ 85258
P: 480.222.3771
IMEG CORP. RESERVES PROPRIETARY RIGHTS, INCLUDING COPYRIGHTS, TO THIS DRAWING AND THE DATA SHOWN THEREON. SAID DRAWING AND/OR DATA ARE THE EXCLUSIVE PROPERTY OF IMEG CORP. AND SHALL NOT BE USED OR REPRODUCED FOR ANY OTHER PROJECT WITHOUT THE EXPRESS WRITTEN APPROVAL AND PARTICIPATION OF IMEG CORP. ©2023 IMEG CORP.

REF. SCALE IN INCHES — PROJECT #23002327.00

STAMP

DYRON MURPHY ARCHITECTS, P.C.
4505 Montbel Place NE, Albuquerque, New Mexico 87107

SHIPROCK PINNACLE HOTEL & RESTAURANT

SHIPROCK, NEW MEXICO

100% CONSTRUCTION DOCUMENTS

ISSUED FOR CONSTRUCTION

NOVEMBER 3, 2023

PROJECT NUMBER	DRAWN BY	PROJ MGR
2022.10	IMEG	IMEG

ELECTRICAL RISER DIAGRAM

Sheet Title

Sheet Number

of

E501

11/1/2023 11:50:10 AM
Autodesk Docs://23002327.00 - Shiprock Pinnacle Hotel & Restaurant/MEP22_23002327.00_Shiprock Pinnacle Restaurant_C.rvt
DYRON MURPHY ARCHITECTS, P.C.

PANEL M2

MOUNTING: SURFACE
ENCLOSURE: NEMA PB 1
FED FROM: 400 A/3P @ MSB-H
LOCATION: Room C343

SINGLE TUB
SOLID NEUTRAL
GROUND BUS

MAIN: 400 A MLO
VOLTS: 120/208 Wye
PHASE: 3
WIRE: 4
SCCR: 42 kA
ISC: 25.95 kA

NOTES:

KEY	CKT NO.	LOAD DESCRIPTION	OCPD AMPS	OCPD P	WIRE SIZE H	WIRE SIZE N	WIRE SIZE G	VD %	A	A	B	B	C	C	VD %	WIRE SIZE G	WIRE SIZE N	WIRE SIZE H	OCPD P	OCPD AMPS	LOAD DESCRIPTION	CKT NO.	KEY
	1	PTAC ROOM 201	20 A	2	12	--	12	0.65	1.31	1.31					1.6	12	--	12	2	20 A	PTAC ROOM 200	2	
--	3	--	--	--	--	--	--	--			1.31	1.31			--	--	--	--	--	--	--	4	--
	5	PTAC ROOM 203	20 A	2	12	--	12	0.94					1.31	1.31	1.89	12	--	12	2	20 A	PTAC ROOM 202	6	
--	7	--	--	--	--	--	--	--	1.31	1.31					--	--	--	--	--	--	--	8	--
	9	PTAC ROOM 205	20 A	2	12	--	12	1.17			1.31	1.31			2.1	12	--	12	2	20 A	PTAC ROOM 204	10	
--	11	--	--	--	--	--	--	--					1.31	1.31	--	--	--	--	--	--	--	12	--
	13	PTAC ROOM 207	20 A	2	12	--	12	1.5	1.31	1.31					2.45	12	--	12	2	20 A	PTAC ROOM 206	14	
--	15	--	--	--	--	--	--	--			1.31	1.31			--	--	--	--	--	--	--	16	--
	17	PTAC ROOM 209	20 A	2	12	--	12	1.87					1.31	1.31	2.8	12	--	12	2	20 A	PTAC ROOM 208	18	
--	19	--	--	--	--	--	--	--	1.31	1.31					--	--	--	--	--	--	--	20	--
	21	PTAC ROOM 211	20 A	2	12	--	12	2.15			1.31	1.31			1.88	10	--	10	2	20 A	PTAC ROOM 210	22	
--	23	--	--	--	--	--	--	--					1.31	1.31	--	--	--	--	--	--	--	24	--
	25	PTAC ROOM 213	20 A	2	12	--	12	2.43	1.31	1.31					2.05	10	--	10	2	20 A	PTAC ROOM 212	26	
--	27	--	--	--	--	--	--	--			1.31	1.31			--	--	--	--	--	--	--	28	--
	29	PTAC ROOM 215	20 A	2	12	--	12	2.66					1.31	1.31	2.19	10	--	10	2	20 A	PTAC ROOM 214	30	
--	31	--	--	--	--	--	--	--	1.31	1.31					--	--	--	--	--	--	--	32	--
	33	PTAC ROOM 217	20 A	2	12	--	12	2.99			1.31	1.31			2.39	10	--	10	2	20 A	PTAC ROOM 216	34	
--	35	--	--	--	--	--	--	--					1.31	1.31	--	--	--	--	--	--	--	36	--
	37	PTAC ROOM 219	20 A	2	10	--	10	2.06	1.31	1.31					2.6	10	--	10	2	20 A	PTAC ROOM 218	38	
--	39	--	--	--	--	--	--	--			1.31	1.31			--	--	--	--	--	--	--	40	--
	41	PTAC ROOM 221	20 A	2	10	--	10	2.26					1.31	1.31	2.78	10	--	10	2	20 A	PTAC ROOM 220	42	
--	43	--	--	--	--	--	--	--	1.31	1.31					--	--	--	--	--	--	--	44	--
--	45	SPARE	20 A	1	--	--	--				0	1.31			2.95	10	--	10	2	20 A	PTAC ROOM 222	46	
--	47	SPARE	20 A	1	--	--	--						0	1.31	--	--	--	--	--	--	--	48	--
	49	HEATED LOUVERS (GFCI)	15 A	2	12	--	12	0.41	0.18	1.31					2.05	8	--	8	2	20 A	PTAC ROOM 224	50	
--	51	--	--	--	--	--	--	--			0.18	1.31			--	--	--	--	--	--	--	52	--
	53	FC 2-01	15 A	2	12	--	12	0.75					0.24	1.31	2.16	8	--	8	2	20 A	PTAC ROOM 226	54	
--	55	--	--	--	--	--	--	--	0.24	1.31					--	--	--	--	--	--	--	56	--
	57	FC 2-02	15 A	2	12	--	12	0.12			0.24	0				--	--	--	1	20 A	SPARE	58	--
--	59	--	--	--	--	--	--	--					0.24	0		--	--	--	1	20 A	SPARE	60	--
								Total Load:	24.01 kVA		21.39 kVA		21.45 kVA										
								Total Amps:	200.14		178.22		178.80										

LOAD SUMMARY

LOAD CLASSIFICATION	CONNECTED LOAD	DEMAND FACTOR	ESTIMATED DEMAND	TOTALS*	
Motor	66 kVA	100.00%	66 kVA		
Power	0.84 kVA	100.00%	0.84 kVA	TOTAL CONNECTED LOAD:	66.84 kVA
				TOTAL ESTIMATED DEMAND LOAD:	66.841 kVA
				TOTAL CONNECTED AMPS:	185.53 A
				TOTAL ESTIMATED DEMAND AMPS:	185.5 A

*TOTAL DEMAND CALCS SUBTRACT ANY REDUNDANT LOAD AND THE SMALLER OF ANY NONCOINCIDENT HVAC LOADS. THIS CALC IS DONE AT EACH PANEL.

CIRCUIT KEY NOTES:

PANEL M1

MOUNTING: SURFACE
ENCLOSURE: NEMA PB 1
FED FROM: 400 A/3P @ MSB-H
LOCATION: ELECTRICAL 134

SINGLE TUB
SOLID NEUTRAL
GROUND BUS

MAIN: 400 A MLO
VOLTS: 120/208 Wye
PHASE: 3
WIRE: 4
SCCR: 22 kA
ISC: 13.03 kA

NOTES:

KEY	CKT NO.	LOAD DESCRIPTION	OCPD AMPS	OCPD P	WIRE SIZE H	WIRE SIZE N	WIRE SIZE G	VD %	A	A	B	B	C	C	VD %	WIRE SIZE G	WIRE SIZE N	WIRE SIZE H	OCPD P	OCPD AMPS	LOAD DESCRIPTION	CKT NO.	KEY
	1	PTAC ROOM 108	20 A	2	12	--	12	0.76	1.31	0.4					0.17	12	12	12	1	20 A	WH-1,2,3 CP-1	2	
--	3	--	--	--	--	--	--	--			1.31	1.43			0.64	12	--	12	3	20 A	BP-1	4	
	5	PTAC ROOM 106	20 A	2	12	--	12	1					1.31	1.43	--	--	--	--	--	--	--	6	--
--	7	--	--	--	--	--	--	--	1.31	1.43					--	--	--	--	--	--	--	8	--
	9	PTAC ROOM 104	20 A	2	12	--	12	1.32			1.31	1.5			1.71	8	--	8	2	25 A	UH 1-01	10	
--	11	--	--	--	--	--	--	--					1.31	1.5	--	--	--	--	--	--	--	12	--
	13	PTAC ROOM 102	20 A	2	12	--	12	1.68	1.31	1.5					1.89	10	--	10	2	25 A	UH 1-02	14	
--	15	--	--	--	--	--	--	--			1.31	1.5			--	--	--	--	--	--	--	16	--
	17	PTAC ROOM 100	20 A	2	12	--	12	1.97					1.31	1.51	2.07	10	--	10	2	25 A	UH 1-ME	18	
--	19	--	--	--	--	--	--	--	1.31	1.51					--	--	--	--	--	--	--	20	--
	21	PTAC ROOM 101	20 A	2	10	--	10	1.91			1.31	0.09			0.22	12	--	12	2	15 A	HEATED LOUVERS (GFCI)	22	
--	23	--	--	--	--	--	--	--					1.31	0.09	--	--	--	--	--	--	--	24	--
	25	PTAC ROOM 103	20 A	2	10	--	10	1.74	1.31	1.51					1.64	10	--	10	2	20 A	HEATED LOUVERS (GFCI)	26	
--	27	--	--	--	--	--	--	--			1.31	1.51			--	--	--	--	--	--	--	28	--
	29	PTAC ROOM 105	20 A	2	12	--	12	2.5					1.31	6.14	0.82	10	--	4	2	60 A	FC 1-01	30	
--	31	--	--	--	--	--	--	--	1.31	6.14					--	--	--	--	--	--	--	32	--
	33	PTAC ROOM 107	20 A	2	12	--	12	2.18			1.31	4.8			1.02	10	--	6	2	50 A	FC 1-02A	34	
--	35	--	--	--	--	--	--	--					1.31	4.8	--	--	--	--	--	--	--	36	--
	37	PTAC ROOM 109	20 A	2	12	--	12	1.94	1.31	4.8					1.67	10	--	6	2	50 A	FC 1-02B	38	
--	39	--	--	--	--	--	--	--			1.31	4.8			--	--	--	--	--	--	--	40	--
	41	WATER SOFTNER	20 A	1	12	12	12	0.62					0.6	6.14	1.44	10	--	4	2	60 A	FC 1-03	42	
--	43	SPACE	--	1	--	--	--		--	6.14					--	--	--	--	--	--	--	44	--
	45	EV CHARGER	50 A	2	4	--	6	2.46			3.95	0.47			1.09	12	--	12	2	15 A	FC 1-04	46	
--	47	--	--	--	--	--	--	--					3.95	0.47	--	--	--	--	--	--	--	48	--
	49	EV CHARGER	50 A	2	4	--	6	2.46	3.95	0.04					0.01	12	--	12	2	15 A	FC 1-05	50	
--	51	--	--	--	--	--	--	--			3.95	0.04			--	--	--	--	--	--	--	52	--
	53	EV CHARGER	50 A	2	4	--	6	2.45					3.95	0.04	0.05	12	--	12	2	15 A	FC 1-06	54	
--	55	--	--	--	--	--	--	--	3.95	0.04					--	--	--	--	--	--	--	56	--
	57	EV CHARGER	50 A	2	4	--	6	2.45			3.95	0.03			0.03	12	--	12	2	15 A	FC 1-07	58	
--	59	--	--	--	--	--	--	--					3.95	0.03	--	--	--	--	--	--	--	60	--
								Total Load:	40.59 kVA		37.21 kVA		42.46 kVA										
								Total Amps:	342.59		310.06		358.21										

LOAD SUMMARY

LOAD CLASSIFICATION	CONNECTED LOAD	DEMAND FACTOR	ESTIMATED DEMAND	TOTALS*	
Motor	26.208 kVA	100.00%	26.208 kVA		
Power	93.453 kVA	100.00%	93.453 kVA	TOTAL CONNECTED LOAD:	120.26 kVA
Receptacles	0.6 kVA	100.00%	0.6 kVA	TOTAL ESTIMATED DEMAND LOAD:	120.261 kVA
				TOTAL CONNECTED AMPS:	333.81 A
				TOTAL ESTIMATED DEMAND AMPS:	333.8 A

*TOTAL DEMAND CALCS SUBTRACT ANY REDUNDANT LOAD AND THE SMALLER OF ANY NONCOINCIDENT HVAC LOADS. THIS CALC IS DONE AT EACH PANEL.

CIRCUIT KEY NOTES:

SWITCHBOARD MSB-H

ENCLOSURE: NEMA 3R
FED FROM: 3,000 A/3P @ UTILITY TRANSFORMER
LOCATION:

SOLID NEUTRAL
GROUND BUS

MAIN: 3,000 A MCCB
VOLTS: 120/208 Wye
PHASE: 3
WIRE: 4
SCCR: 65 kA
ISC: 59.52 kA

NOTES: ARC ENERGY REDUCTION REQUIRED FOR MAIN AND FIRE PUMP.

CKT	LOAD DESCRIPTION	Load	POLES	FRAME	TRIP	TYPE	ACC.	WIRE AND RACEWAY	CIRCUIT KEY
1	M4A	139.06 kVA	3	600 A	600 A			(2) SETS OF 4#350 & 1#1 EGC EACH IN 2 1/2" C.	
2	M4B	69.23 kVA	3	400 A	400 A			4#600 & 1#3 EGC IN 3 1/2" C.	
3	M3	66.84 kVA	3	400 A	400 A			4#600 & 1#3 EGC IN 3 1/2" C.	
4	M2	66.84 kVA	3	400 A	400 A			4#600 & 1#3 EGC IN 3 1/2" C.	
5	M1	120.26 kVA	3	400 A	400 A			4#600 & 1#3 EGC IN 3 1/2" C.	
6	H1A	35.66 kVA	3	250 A	225 A			4#4/0 & 1#4 EGC IN 2 1/2" C.	
7	H1B	65.64 kVA	3	250 A	225 A			4#4/0 & 1#4 EGC IN 2 1/2" C.	
8	R1	28.57 kVA	3	150 A	100 A			4#3 & 1#8 EGC IN 1 1/4" C.	
9	R2A	74.09 kVA	3	250 A	225 A			4#4/0 & 1#4 EGC IN 2 1/2" C.	
10	R3A	74.11 kVA	3	250 A	225 A			4#4/0 & 1#4 EGC IN 2 1/2" C.	
11	R4A	76.51 kVA	3	250 A	225 A			4#4/0 & 1#4 EGC IN 2 1/2" C.	
12	ATS-XH	2.84 kVA	3	150 A	100 A			4#2 & 1#6 EGC IN 1 1/4" C.	
13	FIRE PUMP	60.89 kVA	3	1,200 A	1,200 A			3#250 & 1#4 EGC IN 2 1/2" C.	
14	SPARE	0 kVA	3	250 A	225 A	--	--	--	--
15	SPARE	0 kVA	3	250 A	225 A	--	--	--	--

LOAD SUMMARY (INCLUDES ALL TUBS IN THIS PANEL)

LOAD CLASSIFICATION	CONNECTED LOAD	DEMAND FACTOR	ESTIMATED DEMAND	TOTALS*	
Hotel/Motel Lighting	56.01 kVA	43.57%	24.404 kVA		
Lighting	12.83 kVA	100.00%	12.83 kVA	TOTAL CONNECTED LOAD:	880.53 kVA
Motor	329.006 kVA	100.00%	329.006 kVA	TOTAL ESTIMATED DEMAND LOAD:	834.211 kVA
Other	0.227 kVA	100.00%	0.227 kVA	TOTAL CONNECTED AMPS:	2444.10 A
Power	205.667 kVA	100.00%	205.667 kVA	TOTAL ESTIMATED DEMAND AMPS:	2,315.5 A
Receptacles	39.42 kVA	62.68%	24.71 kVA		
Hotel Room Appliance	187 kVA	100.00%	187 kVA		
DRYER	35.722 kVA	100.00%	35.722 kVA		
WASHER	14.646 kVA	100.00%	14.646 kVA		

*TOTAL DEMAND CALCS SUBTRACT ANY REDUNDANT LOAD AND THE SMALLER OF ANY NONCOINCIDENT HVAC LOADS. THIS CALC IS DONE AT EACH PANEL.

CIRCUIT KEY NOTES:

PANEL M4A

MOUNTING: SURFACE
ENCLOSURE: NEMA PB 1
FED FROM: 600 A/3P @ MSB-H
LOCATION: STORAGE C557

SINGLE TUB
SOLID NEUTRAL
GROUND BUS

MAIN: 600 A MLO
VOLTS: 120/208 Wye
PHASE: 3
WIRE: 4
SCCR: 42 kA
ISC: 29.31 kA

NOTES:

KEY	CKT NO.	LOAD DESCRIPTION	OCPD AMPS	OCPD P	WIRE SIZE H	WIRE SIZE N	WIRE SIZE G	VD %	A	A	B	B	C	C	VD %	WIRE SIZE G	WIRE SIZE N	WIRE SIZE H	OCPD P	OCPD AMPS	LOAD DESCRIPTION	CKT NO.	KEY
	1	CU 2-02	60 A	2	8	--	10	1.77	3.78	3.78					2.16	4	--	4	2	60 A	CU 3-01	2	
--	3	--	--	--	--	--	--	--			3.78	3.78			--	--	--	--	--	--	--	4	--
	5	CU 1-04	60 A	2	8	--	10	1.88					3.78	0.54	1.76	12	12	12	1	20 A	ROOFTOP RECEP	6	
--	7	--	--	--	--	--	--	--	3.78	3.78					2.18	4	--	4	2	60 A	CU 1-ES	8	
	9	CU 4-02	60 A	2	8	--	10	2.03			3.78	3.78			--	--	--	--	--	--	--	10	--
--	11	--	--	--	--	--	--	--					3.78	3.78	2.22	4	--	4	2	60 A	CU 2-01	12	
	13	CU 3-02	60 A	2	8	--	10	1.92	3.78	3.78					--	--	--	--	--	--	--	14	--
--	15	--	--	--	--	--	--	--			3.78	0.18			0.41	12	--	12	2	15 A	HEATED LOUVERS (GFCI)	16	
	17	CU 1-05	60 A	2	6	--	8	2.54					3.78	0.18	--	--	--	--	--	--	--	18	--
--	19	--	--	--	--	--	--	--	3.78	0						--	--	--	1	20 A	SPARE	20	--
	21	CU 1-03	60 A	2	6	--	8	2.62			3.78	0				--	--	--	1	20 A	SPARE	22	--
--	23	--	--	--	--	--	--	--					3.78	0		--	--	--	1	20 A	SPARE	24	--
	25	CU 1-02B	60 A	2	6	--	8	2.72	3.78	0						--	--	--	1	20 A	SPARE	26	--
--	27	--	--	--	--	--	--	--			3.78	0				--	--	--	1	20 A	SPARE	28	--
	29	CU 1-02A	60 A	2	6	--	8	2.79					3.78	0		--	--	--	1	20 A	SPARE	30	--
--	31	--	--	--	--	--	--	--	3.78	0						--	--	--	1	20 A	SPARE	32	--
	33	CU 1-01	60 A	2	6	--	8	2.69			3.78	0				--	--	--	1	20 A	SPARE	34	--
--	35	--	--	--	--	--	--	--					3.78	--		--	--	--	1	--	SPACE	36	--
	37	CU 4-01	60 A	2	4	--	4	2.11	3.78	--						--	--	--	1	--	SPACE	38	--
--	39	--	--	--	--	--	--	--			3.78	--				--	--	--	1	--	SPACE	40	--
--	41	SPACE	--	1	--	--	--						--	--		--	--	--	1	--	SPACE	42	--
--	43	SPACE	--	1	--	--	--		--	--						--	--	--	1	--	SPACE	44	--
--	45	SPACE	--	1	--	--	--				--	--				--	--	--	1	--	SPACE	46	--
--	47	SPACE	--	1	--	--	--						--	--		--	--	--	1	--	SPACE	48	--
	49	ELEVATOR 1 MOTOR	100 A	3	1	--	8	1.5	6.67	--						--	--	--	1	--	SPACE	50	--
--	51	--	--	--	--	--	--	--			6.67	--				--	--	--	1	--	SPACE	52	--
--	53	--	--	--	--	--	--	--					6.67	--		--	--	--	1	--	SPACE	54	--
	55	ELEVATOR 2 MOTOR	100 A	3	1	--	8	1.45	6.67	--						--	--	--	1	--	SPACE	56	--
--	57	--	--	--	--	--	--	--			6.67	--				--	--	--	1	--	SPACE	58	--
--	59	--	--	--	--	--	--	--					6.67	--		--	--	--	1	--	SPACE	60	--
								Total Load:	51.09 kVA		47.49 kVA		40.48 kVA										
								Total Amps:	434.70		404.74		337.33										

LOAD SUMMARY

LOAD CLASSIFICATION	CONNECTED LOAD	DEMAND FACTOR	ESTIMATED DEMAND	TOTALS*	
Motor	40 kVA	100.00%	40 kVA		
Power	98.515 kVA	100.00%	98.515 kVA	TOTAL CONNECTED LOAD:	139.06 kVA
Receptacles	0.54 kVA	100.00%	0.54 kVA	TOTAL ESTIMATED DEMAND LOAD:	139.055 kVA
				TOTAL CONNECTED AMPS:	385.98 A
				TOTAL ESTIMATED DEMAND AMPS:	386 A

*TOTAL DEMAND CALCS SUBTRACT ANY REDUNDANT LOAD AND THE SMALLER OF ANY NONCOINCIDENT HVAC LOADS. THIS CALC IS DONE AT EACH PANEL.

CIRCUIT KEY NOTES:

PANEL M3

MOUNTING: SURFACE
ENCLOSURE: NEMA PB 1
FED FROM: 400 A/3P @ MSB-H
LOCATION: STORAGE C106

SINGLE TUB
SOLID NEUTRAL
GROUND BUS

MAIN: 400 A MLO
VOLTS: 120/208 Wye
PHASE: 3
WIRE: 4
SCCR: 42 kA
ISC: 23.26 kA

NOTES:

KEY	CKT NO.	LOAD DESCRIPTION	OCPD AMPS	OCPD P	WIRE SIZE H	WIRE SIZE N	WIRE SIZE G	VD %	A	A	B	B	C	C	VD %	WIRE SIZE G	WIRE SIZE N	WIRE SIZE H	OCPD P	OCPD AMPS	LOAD DESCRIPTION	CKT NO.	KEY
	1	PTAC ROOM 301	20 A	2	12	--	12	0.66	1.31	1.31					1.61	12	--	12	2	20 A	PTAC ROOM 300	2	
--	3	--	--	--	--	--	--	--			1.31	1.31			--	--	--	--	--	--	--	4	--
	5	PTAC ROOM 303	20 A	2	12	--	12	0.95					1.31	1.31	1.9	12	--	12	2	20 A	PTAC ROOM 302	6	
--	7	--	--	--	--	--	--	--	1.31	1.31					--	--	--	--	--	--	--	8	--
	9	PTAC ROOM 305	20 A	2	12	--	12	1.18			1.31	1.31			2.1	12	--	12	2	20 A	PTAC ROOM 304	10	
--	11	--	--	--	--	--	--	--					1.31	1.31	--	--	--	--	--	--	--	12	--
	13	PTAC ROOM 307	20 A	2	12	--	12	1.5	1.31	1.31					2.46	12	--	12	2	20 A	PTAC ROOM 306	14	
--	15	--	--	--	--	--	--	--			1.31	1.31			--	--	--	--	--	--	--	16	--
	17	PTAC ROOM 309	20 A	2	12	--	12	1.87					1.31	1.31	2.83	12	--	12	2	20 A	PTAC ROOM 308	18	
--	19	--	--	--	--	--	--	--	1.31	1.31					--	--	--	--	--	--	--	20	--
	21	PTAC ROOM 311	20 A	2	12	--	12	2.15			1.31	1.31			1.88	10	--	10	2	20 A	PTAC ROOM 310	22	
--	23	--	--	--	--	--	--	--					1.31	1.31	--	--	--	--	--	--	--	24	--
	25	PTAC ROOM 313	20 A	2	12	--	12	2.4	1.31	1.31					2.05	10	--	10	2	20 A	PTAC ROOM 312	26	
--	27	--	--	--	--	--	--	--			1.31	1.31			--	--	--	--	--	--	--	28	--
	29	PTAC ROOM 315	20 A	2	12	--	12	2.67					1.31	1.31	2.19	10	--	10	2	20 A	PTAC ROOM 314	30	
--	31	--	--	--	--	--	--	--	1.31	1.31					--	--	--	--	--	--	--	32	--
	33	PTAC ROOM 317	20 A	2	12	--	12	3			1.31	1.31			2.39	10	--	10	2	20 A	PTAC ROOM 316	34	
--	35	--	--	--	--	--	--	--					1.31	1.31	--	--	--	--	--	--	--	36	--
	37	PTAC ROOM 319	20 A	2	10	--	10	2.07	1.31	1.31					2.61	10	--	10	2	20 A	PTAC ROOM 318	38	
--	39	--	--	--	--	--	--	--			1.31	1.31			--	--	--	--	--	--	--	40	--
	41	PTAC ROOM 321	20 A	2	10	--	10	2.24					1.31	1.31	2.78	10	--	10	2	20 A	PTAC ROOM 320	42	
--	43	--	--	--	--	--	--	--	1.31	1.31					--	--	--	--	--	--	--	44	--
--	45	SPARE	20 A	1	--	--	--				0	1.31			2.96	10	--	10	2	20 A	PTAC ROOM 322	46	
--	47	SPARE	20 A	1	--	--	--						0	1.31	--	--	--	--	--	--	--	48	--
	49	HEATED LOUVERS (GFCI)	15 A	2	12	--	12	0.4	0.18	1.31					2.05	8	--	8	2	20 A	PTAC ROOM 324	50	
--	51	--	--	--	--	--	--	--			0.18	1.31			--	--	--	--	--	--	--	52	--
	53	FC 3-01	15 A	2	12	--	12	0.75					0.24	1.31	2.17	8	--	8	2	20 A	PTAC ROOM 326	54	
--	55	--	--	--	--	--	--	--	0.24	1.31					--	--	--	--	--	--	--	56	--
	57	FC 3-02	15 A	2	12	--	12	0.12			0.24	0				--	--	--	1	20 A	SPARE	58	--
--	59	--	--	--	--	--	--	--					0.24	0		--	--	--	1	20 A	SPARE	60	--
								Total Load:	24.01 kVA		21.39 kVA		21.45 kVA										
								Total Amps:	200.14		178.22		178.80										

LOAD SUMMARY

LOAD CLASSIFICATION	CONNECTED LOAD	DEMAND FACTOR	ESTIMATED DEMAND	TOTALS*	
Motor	65.52 kVA	100.00%	65.52 kVA		
Power	1.321 kVA	100.00%	1.321 kVA	TOTAL CONNECTED LOAD:	66.84 kVA
				TOTAL ESTIMATED DEMAND LOAD:	66.841 kVA
				TOTAL CONNECTED AMPS:	185.53 A
				TOTAL ESTIMATED DEMAND AMPS:	185.5 A

*TOTAL DEMAND CALCS SUBTRACT ANY REDUNDANT LOAD AND THE SMALLER OF ANY NONCOINCIDENT HVAC LOADS. THIS CALC IS DONE AT EACH PANEL.

CIRCUIT KEY NOTES:

IMEG
9000 E PIMA CENTER PARKWAY
SUITE 320
SCOTTSDALE, AZ 85258
P: 480.222.3771
www.imegcorp.com

IMEG CORP. RESERVES PROPRIETARY RIGHTS, INCLUDING COPYRIGHTS, TO THIS DRAWING AND THE DATA SHOWN THEREON. SAID DRAWING AND/OR DATA ARE THE EXCLUSIVE PROPERTY OF IMEG CORP. AND SHALL NOT BE USED OR REPRODUCED FOR ANY OTHER PROJECT WITHOUT THE EXPRESS WRITTEN APPROVAL AND PARTICIPATION OF IMEG CORP. ©2023 IMEG CORP.

0 1 2 3
REF. SCALE IN INCHES PROJECT #23002327.00

STAMP

JOEL D. DeHAVEN
NEW MEXICO
18437
PROFESSIONAL ENGINEER
11-1-23

DYRON MURPHY ARCHITECTS, P.C.
4505 Montbel Place NE, Albuquerque, New Mexico 87107

SHIPROCK PINNACLE HOTEL & RESTAURANT
SHIPROCK, NEW MEXICO
100% CONSTRUCTION DOCUMENTS
ISSUED FOR CONSTRUCTION
NOVEMBER 3, 2023

PROJECT NUMBER	DRAWN BY	PROJ MGR
2022.10	IMEG	IMEG

ELECTRICAL PANEL SCHEDULES - HOTEL

Sheet Title

Sheet Number of

E502

11/1/2023 1:02:04 PM Autodesk Docs://23002327.00 - Shiprock Pinnacle Hotel & Restaurant/MEP22_23002327.00_Shiprock Pinnacle Hotel_C.rvt
DYRON MURPHY ARCHITECTS, P.C.

PANEL H1B

MOUNTING: SURFACE
ENCLOSURE: NEMA PB 1
FED FROM: 225 A/3P @ MSB-H
LOCATION: ELECTRICAL 134

SINGLE TUB
SOLID NEUTRAL
GROUND BUS

MAIN: 225 A MLO
VOLTS: 120/208 Wye
PHASE: 3
WIRE: 4
SCCR: 10 kA
ISC: 9.41 kA

NOTES:

KEY	CKT NO.	LOAD DESCRIPTION	OCPD AMPS	P	WIRE SIZE H	WIRE SIZE N	WIRE SIZE G	VD %	A	A	B	B	C	C	VD %	WIRE SIZE G	WIRE SIZE N	WIRE SIZE H	OCPD P	OCPD AMPS	LOAD DESCRIPTION	CKT NO.	KEY
	1	Receptacles Room 145, 143	20 A	1	12	12	12	1.82	0.72	1					1.11	12	12	12	1	20 A	FITNESS BIKE	2	
	3	DOOR OPERATORS	20 A	1	12	12	12	2.52			0.5	1			1.01	12	12	12	1	20 A	FITNESS ELIPTICAL	4	
	5	ELEVATOR LTG	20 A	1	12	12	12	0.4					0.11	1	0.92	12	12	12	1	20 A	FITNESS ELIPTICAL	6	
	7	ELEVATOR RECP	20 A	1	12	12	12	0.63	0.18	1					0.82	12	12	12	1	20 A	FITNESS TREADMILL	8	
	9	ELEVATOR RECP	20 A	1	12	12	12	0.77			0.18	1			0.73	12	12	12	1	20 A	FITNESS TREADMILL	10	
	11	ELEVATOR RECP	20 A	1	12	12	12	0.86					0.18	1.26	1.86	12	12	12	1	20 A	GYM RECEPS	12	
	13	ELEVATOR CONTROLLER	20 A	1	10	10	10	2.57	0.96	1					1.85	12	12	12	1	20 A	IT RACK	14	
	15	ELEVATOR CONTROLLER	20 A	1	10	10	10	2.59			0.96	1			1.59	12	12	12	1	20 A	IT RACK	16	
	17	Receptacles REGISTRATION 114	20 A	1	12	12	12	1.68					0.72	1	1.63	12	12	12	1	20 A	IT RACK	18	
	19	JOCKEY PUMP	25 A	3	12	--	12	0.4	0.5	0						--	--	--	1	20 A	SPARE	20	--
--	21	--	--	--	--	--	--	--			0.5	0				--	--	--	1	20 A	SPARE	22	--
--	23	--	--	--	--	--	--	--					0.5	0		--	--	--	1	20 A	SPARE	24	--
	25	WASHER	20 A	1	12	12	12	0.57	1	0						--	--	--	1	20 A	SPARE	26	--
	27	WASHER	20 A	1	12	12	12	0.5			1	0				--	--	--	1	20 A	SPARE	28	--
	29	WASHER	20 A	1	12	12	12	0.44					1	0		--	--	--	1	20 A	SPARE	30	--
	31	WASHER	20 A	1	12	12	12	0.37	1	0						--	--	--	1	20 A	SPARE	32	--
	33	WASHER	20 A	1	12	12	12	0.36			1	0				--	--	--	1	20 A	SPARE	34	--
	35	WASHER	20 A	1	12	12	12	0.4					1	0		--	--	--	1	20 A	SPARE	36	--
	37	DRYER	30 A	2	10	10	10	0.91	2.8	0						--	--	--	1	20 A	SPARE	38	--
--	39	--	--	--	--	--	--	--			2.8	0				--	--	--	1	20 A	SPARE	40	--
	41	DRYER	30 A	2	10	10	10	0.85					2.8	0.53	1.03	12	--	12	2	15 A	COM GAS DRYER	42	
--	43	--	--	--	--	--	--	--	2.8	0.53					--	--	--	--	--	--	--	44	--
	45	DRYER	30 A	2	10	10	10	0.79			2.8	0.53			1	12	--	12	2	15 A	COM GAS DRYER	46	
--	47	--	--	--	--	--	--	--					2.8	0.53	--	--	--	--	--	--	--	48	--
	49	DRYER	30 A	2	10	10	10	0.72	2.8	1.44					1.84	12	--	12	3	20 A	COM WASHER	50	
--	51	--	--	--	--	--	--	--			2.8	1.44			--	--	--	--	--	--	--	52	--
	53	DRYER	30 A	2	10	10	10	0.74					2.8	1.44	--	--	--	--	--	--	--	54	--
--	55	--	--	--	--	--	--	--	2.8	1.44					1.78	12	--	12	3	20 A	COM WASHER	56	
	57	DRYER	30 A	2	10	10	10	0.8			2.8	1.44			--	--	--	--	--	--	--	58	--
--	59	--	--	--	--	--	--	--					2.8	1.44	--	--	--	--	--	--	--	60	--
								Total Load:	21.97 kVA		21.75 kVA		21.92 kVA										
								Total Amps:	183.31		181.27		182.85										

LOAD SUMMARY

LOAD CLASSIFICATION	CONNECTED LOAD	DEMAND FACTOR	ESTIMATED DEMAND
Motor	1.92 kVA	100.00%	1.92 kVA
Other	0.113 kVA	100.00%	0.113 kVA
Power	2 kVA	100.00%	2 kVA
Receptacles	11.24 kVA	94.48%	10.62 kVA
DRYER	35.722 kVA	100.00%	35.722 kVA
WASHER	14.646 kVA	100.00%	14.646 kVA

TOTALS*	
TOTAL CONNECTED LOAD:	65.64 kVA
TOTAL ESTIMATED DEMAND LOAD:	65.021 kVA
TOTAL CONNECTED AMPS:	182.20 A
TOTAL ESTIMATED DEMAND AMPS:	180.5 A

*TOTAL DEMAND CALCS SUBTRACT ANY REDUNDANT LOAD AND THE SMALLER OF ANY NONCOINCIDENT HVAC LOADS. THIS CALC IS DONE AT EACH PANEL.

CIRCUIT KEY NOTES:

PANEL H1A

MOUNTING: SURFACE
ENCLOSURE: NEMA PB 1
FED FROM: 225 A/3P @ MSB-H
LOCATION: ELECTRICAL 134

SINGLE TUB
SOLID NEUTRAL
GROUND BUS

MAIN: 225 A MLO
VOLTS: 120/208 Wye
PHASE: 3
WIRE: 4
SCCR: 10 kA
ISC: 9.56 kA

NOTES:

KEY	CKT NO.	LOAD DESCRIPTION	OCPD AMPS	P	WIRE SIZE H	WIRE SIZE N	WIRE SIZE G	VD %	A	A	B	B	C	C	VD %	WIRE SIZE G	WIRE SIZE N	WIRE SIZE H	OCPD P	OCPD AMPS	LOAD DESCRIPTION	CKT NO.	KEY
	1	1ST FLOOR NORTH ROOMS LTG	20 A	1	12	12	12	1.38	0.55	0.17					0.33	12	12	12	1	20 A	EF H1,H2,H5	2	
	3	1ST FLOOR SOUTH ROOMS LTG	20 A	1	8	8	8	2.05			0.98	0.11			0.13	12	12	12	1	20 A	EF H3,H4	4	
	5	1ST FLOOR LOBBY LIGHTING	20 A	1	12	12	12	1.92					0.43	0.5	0.28	12	12	12	1	20 A	FACP (RED LOCK ON)	6	
	7	1ST FLOOR HALL SCONCES	20 A	1	12	12	12	0.39	0.19	0.5					0.19	12	12	12	1	20 A	LIGHTING CONTROLLER	8	
	9	1ST FLOOR HALL DOWNIGHTS	20 A	1	12	12	12	1.05			0.21	0.54			0.4	12	12	12	1	20 A	Receptacles Room 133, 134, 136	10	
	11	2ND FLOOR HALL DOWNLIGHTS	20 A	1	12	12	12	2.25					0.37	0.5	0.51	12	12	12	1	20 A	ICE MACHINE	12	
	13	2ND FLOOR HALL SCONCES	20 A	1	12	12	12	2.35	0.5	0.5					0.47	12	12	12	1	20 A	VENDING MACHINE	14	
	15	3RD FLOOR HALL DOWNLIGHTS	20 A	1	12	12	12	2.34			0.37	0.36			0.37	12	12	12	1	20 A	Receptacles Room 139, 138	16	
	17	3RD FLOOR HALL SCONCES	20 A	1	12	12	12	2.48					0.5	1.2	1.6	12	12	12	1	20 A	HAND DRYER WOMEN 138	18	
	19	4TH FLOOR HALL DOWNLIGHTS	20 A	1	12	12	12	2.44	0.37	1.2					1.6	12	12	12	1	20 A	HAND DRYER MEN 139	20	
	21	4TH FLOOR HALL SCONCES	20 A	1	12	12	12	2.61			0.5	0							1	0 A	ELEC FAUCETS/VALVES Room 138,...	22	
	23	EAST STAIR LIGHTING	20 A	1	12	12	12	1.51					0.33	0.72	1.29	12	12	12	1	20 A	Receptacles Room 140, 142	24	
	25	WEST STAIR LIGHTING	20 A	1	12	12	12	1.18	0.33	0.5					0.51	12	12	12	1	20 A	DRINKING FOUNTAIN	26	
	27	EXTERIOR SCONCES	20 A	1	10	10	10	2.78			0.62	0.18			0.3	12	12	12	1	20 A	LOBBY COUNTER	28	
	29	EXTERIOR PATIO & CARPORT LTG	20 A	1	12	12	12	0.98					0.21	0.54	0.76	12	12	12	1	20 A	LOBBY COUNTER	30	
	31	EXTERIOR SIGN LTG	20 A	1	12	12	12	0.56	0.07	0.18					0.31	12	12	12	1	20 A	LOBBY COUNTER	32	
	33	PARKING LOT LTG WEST	20 A	2	8	--	8	2.63			0.66	0.18			0.32	12	12	12	1	20 A	LOBBY COUNTER	34	
--	35	--	--	--	--	--	--	--					0.66	1.44	2.68	10	10	10	1	20 A	Receptacles Room 112	36	
	37	PARKING LOT LTG NORTH	20 A	2	8	--	8	2.02	0.52	1.08					2.17	10	10	10	1	20 A	Receptacles LOUNGE 112	38	
--	39	--	--	--	--	--	--	--			0.52	1.08			2.32	12	12	12	1	20 A	FLOOR BOXES LOUNGE 112	40	
	41	PARKING LOT LTG EAST AND SOUTH	20 A	2	8	--	8	2.88					0.65	1.08	2.84	12	12	12	1	20 A	FLOOR BOXES LOUNGE 112	42	
--	43	--	--	--	--	--	--	--	0.65	0.9					2.86	12	12	12	1	20 A	Receptacles Room 117, 114, 111	44	
	45	SUMP PUMP	20 A	1	12	12	12	1.84			0.5	0.9			2.51	12	12	12	1	20 A	Receptacles HOUSE KEEPING...	46	
	47	ELEVATOR RECEPS	20 A	1	12	12	12	0.66					0.18	1.26	2.29	10	10	10	1	20 A	Receptacles Room 118, 109	48	
	49	ELEVATOR SHAFT LIGHTS	20 A	1	12	12	12	0.45	0.11	1					2.24	12	12	12	1	20 A	GRAB N GO REACH IN	50	
	51	Receptacles 128	20 A	1	12	12	12	1.74			1.26	1			1.94	12	12	12	1	20 A	Receptacles GRAB 'N GO 115	52	
	53	Receptacles Room 131, 130	20 A	1	12	12	12	0.73					0.54	0.5	1.1	12	12	12	1	20 A	Receptacles GRAB 'N GO 115	54	
	55	HAND DRYER 125	20 A	1	12	12	12	1.57	1.2	1.02					1.83	12	12	12	1	20 A	RECEPS 126, 127, 125	56	
	57	ALRM BELL (RED LOCK ON)	20 A	1	12	12	12	1.65			1	0.36			0.68	12	12	12	1	20 A	Receptacles BREAKROOM 126	58	
	59	GRAB AND GO REACH IN	20 A	1	12	12	12	2.16					1	0.18	0.37	12	12	12	1	20 A	MICRO BREAKROOM 126	60	
								Total Load:	11.53 kVA		11.34 kVA		12.79 kVA										
								Total Amps:	96.35		94.49		106.82										

LOAD SUMMARY

LOAD CLASSIFICATION	CONNECTED LOAD	DEMAND FACTOR	ESTIMATED DEMAND
Lighting	10.19 kVA	100.00%	10.19 kVA
Other	0.113 kVA	100.00%	0.113 kVA
Power	6.176 kVA	100.00%	6.176 kVA
Receptacles	19.18 kVA	76.07%	14.59 kVA

TOTALS*	
TOTAL CONNECTED LOAD:	35.66 kVA
TOTAL ESTIMATED DEMAND LOAD:	31.069 kVA
TOTAL CONNECTED AMPS:	98.98 A
TOTAL ESTIMATED DEMAND AMPS:	86.2 A

*TOTAL DEMAND CALCS SUBTRACT ANY REDUNDANT LOAD AND THE SMALLER OF ANY NONCOINCIDENT HVAC LOADS. THIS CALC IS DONE AT EACH PANEL.

CIRCUIT KEY NOTES:

PANEL M4B

MOUNTING: SURFACE
ENCLOSURE: NEMA PB 1
FED FROM: 400 A/3P @ MSB-H
LOCATION: STORAGE C557

SINGLE TUB
SOLID NEUTRAL
GROUND BUS

MAIN: 400 A MLO
VOLTS: 120/208 Wye
PHASE: 3
WIRE: 4
SCCR: 22 kA
ISC: 21.62 kA

NOTES:

KEY	CKT NO.	LOAD DESCRIPTION	OCPD AMPS	P	WIRE SIZE H	WIRE SIZE N	WIRE SIZE G	VD %	A	A	B	B	C	C	VD %	WIRE SIZE G	WIRE SIZE N	WIRE SIZE H	OCPD P	OCPD AMPS	LOAD DESCRIPTION	CKT NO.	KEY
	1	PTAC ROOM 401	20 A	2	12	--	12	0.72	1.31	1.31					1.67	12	--	12	2	20 A	PTAC ROOM 400	2	
--	3	--	--	--	--	--	--	--			1.31	1.31			--	--	--	--	--	--	--	4	--
	5	PTAC ROOM 403	20 A	2	12	--	12	1					1.31	1.31	1.96	12	--	12	2	20 A	PTAC ROOM 402	6	
--	7	--	--	--	--	--	--	--	1.31	1.31					--	--	--	--	--	--	--	8	--
	9	PTAC ROOM 405	20 A	2	12	--	12	1.2			1.31	1.31			2.19	12	--	12	2	20 A	PTAC ROOM 404	10	
--	11	--	--	--	--	--	--	--					1.31	1.31	--	--	--	--	--	--	--	12	--
	13	PTAC ROOM 407	20 A	2	12	--	12	1.56	1.31	1.31					2.52	12	--	12	2	20 A	PTAC ROOM 406	14	
--	15	--	--	--	--	--	--	--			1.31	1.31			--	--	--	--	--	--	--	16	--
	17	PTAC ROOM 409	20 A	2	12	--	12	1.94					1.31	1.31	2.89	12	--	12	2	20 A	PTAC ROOM 408	18	
--	19	--	--	--	--	--	--	--	1.31	1.31					--	--	--	--	--	--	--	20	--
	21	PTAC ROOM 411	20 A	2	12	--	12	2.22			1.31	1.31			1.92	10	--	10	2	20 A	PTAC ROOM 410	22	
--	23	--	--	--	--	--	--	--					1.31	1.31	--	--	--	--	--	--	--	24	--
	25	PTAC ROOM 413	20 A	2	12	--	12	2.5	1.31	1.31					2.09	10	--	10	2	20 A	PTAC ROOM 412	26	
--	27	--	--	--	--	--	--	--			1.31	1.31			--	--	--	--	--	--	--	28	--
	29	PTAC ROOM 415	20 A	2	12	--	12	2.74					1.31	1.31	2.2	10	--	10	2	20 A	PTAC ROOM 414	30	
--	31	--	--	--	--	--	--	--	1.31	1.31					--	--	--	--	--	--	--	32	--
	33	PTAC ROOM 417	20 A	2	10	--	10	1.85			1.31	1.31			2.4	10	--	10	2	20 A	PTAC ROOM 416	34	
--	35	--	--	--	--	--	--	--					1.31	1.31	--	--	--	--	--	--	--	36	--
	37	PTAC ROOM 419	20 A	2	10	--	10	2.1	1.31	1.31					2.65	10	--	10	2	20 A	PTAC ROOM 418	38	
--	39	--	--	--	--	--	--	--			1.31	1.31			--	--	--	--	--	--	--	40	--
	41	PTAC ROOM 421	20 A	2	10	--	10	2.28					1.31	1.31	2.82	10	--	10	2	20 A	PTAC ROOM 420	42	
--	43	--	--	--	--	--	--	--	1.31	1.31					--	--	--	--	--	--	--	44	--
--	45	SPARE	20 A	1	--	--	--				0	1.31			2.99	10	--	10	2	20 A	PTAC ROOM 422	46	
--	47	SPARE	20 A	1	--	--	--						0	1.31	--	--	--	--	--	--	--	48	--
	49	FC 4-02	15 A	2	12	--	12	0.12	0.24	1.31					2.08	8	--	8	2	20 A	PTAC ROOM 424	50	
--	51	--	--	--	--	--	--	--			0.24	1.31			--	--	--	--	--	--	--	52	--
	53	FC 4-01	15 A	2	12	--	12	0.76					0.24	1.31	2.19	8	--	8	2	20 A	PTAC ROOM 426	54	
--	55	--	--	--	--	--	--	--	0.24	1.31					--	--	--	--	--	--	--	56	--
	57	FC 1-ES	15 A	2	12	--	12	1.42			0.42	0.96			2.86	10	10	10	1	20 A	ELVATOR 1 CONTROLLER	58	
--	59	--	--	--	--	--	--	--					0.42	0.96	2.8	10	10	10	1	20 A	ELVATOR 2 CONTROLLER	60	
								Total Load:	24.07 kVA		22.58 kVA		22.58 kVA										
								Total Amps:	200.56		188.19		188.19										

LOAD SUMMARY

LOAD CLASSIFICATION	CONNECTED LOAD	DEMAND FACTOR	ESTIMATED DEMAND
Motor	68.272 kVA	100.00%	68.272 kVA
Power	0.961 kVA	100.00%	0.961 kVA

TOTALS*	
TOTAL CONNECTED LOAD:	69.23 kVA
TOTAL ESTIMATED DEMAND LOAD:	69.233 kVA
TOTAL CONNECTED AMPS:	192.17 A
TOTAL ESTIMATED DEMAND AMPS:	192.2 A

*TOTAL DEMAND CALCS SUBTRACT ANY REDUNDANT LOAD AND THE SMALLER OF ANY NONCOINCIDENT HVAC LOADS. THIS CALC IS DONE AT EACH PANEL.

CIRCUIT KEY NOTES:

PANEL R2A

MOUNTING: SURFACE
ENCLOSURE: NEMA PB 1
FED FROM: 225 A/3P @ MSB-H
LOCATION: Room C343

SINGLE TUB
SOLID NEUTRAL
GROUND BUS

MAIN: 225 A MLO
VOLTS: 120/208 Wye
PHASE: 3
WIRE: 4
SCCR: 22 kA
ISC: 20.94 kA

NOTES: FEED THRU LUGS. LOADS FROM PANEL R2B REFLECTED IN LOAD SUMMARY BELOW.

KEY	CKT NO.	LOAD DESCRIPTION	OCPD AMPS	P	WIRE SIZE H	WIRE SIZE N	WIRE SIZE G	VD %	A	A	B	B	C	C	VD %	WIRE SIZE G	WIRE SIZE N	WIRE SIZE H	OCPD P	OCPD AMPS	LOAD DESCRIPTION	CKT NO.	KEY
--	1	SPARE	20 A	1	--	--	--		0	0.49					1.52	12	12	12	1	20 A	RECEP & LTG ROOM 215	2	
	3	RECEP & LTG ROOM 201	20 A	1	12	12	12	0.37			0.51	0.17			0.54	12	12	12	1	20 A	RESTROOM ROOM 215	4	
	5	RESTROOM ROOM 201	20 A	1	12	12	12	0.1					0.15	1	1.84	10	10	10	1	20 A	COFFEE ROOM 215	6	
	7	COFFEE ROOM 201	20 A	1	12	12	12	0.66	1	1.2					2.18	10	10	10	1	20 A	MICROWAVE ROOM 215	8	
	9	MICROWAVE ROOM 201	20 A	1	12	12	12	0.74			1.2	0.49			1.7	12	12	12	1	20 A	RECEP & LTG ROOM 217	10	
	11	RECEP & LTG ROOM 203	20 A	1	12	12	12	0.54					0.51	0.17	0.6	12	12	12	1	20 A	RESTROOM ROOM 217	12	
	13	RESTROOM ROOM 203	20 A	1	12	12	12	0.15	0.15	1					2.07	10	10	10	1	20 A	COFFEE ROOM 217	14	
	15	COFFEE ROOM 203	20 A	1	12	12	12	0.99			1	1.2			2.45	10	10	10	1	20 A	MICROWAVE ROOM 217	16	
	17	MICROWAVE ROOM 203	20 A	1	12	12	12	1.14					1.2	0.51	1.95	12	12	12	1	20 A	RECEP & LTG ROOM 219	18	
	19	RECEP & LTG ROOM 205	20 A	1	12	12	12	0.69	0.49	0.15					0.56	12	12	12	1	20 A	RESTROOM ROOM 219	20	
	21	RESTROOM ROOM 205	20 A	1	12	12	12	0.24			0.17	1			2.28	10	10	10	1	20 A	COFFEE ROOM 219	22	
	23	COFFEE ROOM 205	20 A	1	12	12	12	1.34					1	1.2	2.7	10	10	10	1	20 A	MICROWAVE ROOM 219	24	
	25	MICROWAVE ROOM 205	20 A	1	12	12	12	1.56	1.2	0.56					2.33	12	12	12	1	20 A	RECEP & LTG ROOM 221	26	
	27	RECEP & LTG ROOM 207	20 A	1	12	12	12	0.87			0.49	0.15			0.63	12	12	12	1	20 A	RESTROOM ROOM 221	28	
	29	RESTROOM ROOM 207	20 A	1	12	12	12	0.3					0.17	1	2.48	10	10	10	1	20 A	COFFEE ROOM 221	30	
	31	COFFEE ROOM 207	20 A	1	12	12	12	1.7	1	1.2					2.95	10	10	10	1	20 A	MICROWAVE ROOM 221	32	
	33	MICROWAVE ROOM 207	20 A	1	12	12	12	2.01			1.2	0.72			1.06	12	12	12	1	20 A	Receptacles Room C386, C343	34	
	35	RECEP & LTG ROOM 209	20 A	1	12	12	12	1.08					0.51	0.9	2.76	10	10	10	1	20 A	Receptacles Room C386, C339, C440	36	
	37	RESTROOM ROOM 209	20 A	1	12	12	12	0.31	0.15	0.5					2.4	12	12	12	1	20 A	VENDING	38	
	39	COFFEE ROOM 209	20 A	1	12	12	12	2.06			1	0.5			2.44	12	12	12	1	20 A	ICE MACHINE	40	
	41	MICROWAVE ROOM 209	20 A	1	12	12	12	2.4					1.2	0		--	--	--	1	20 A	SPARE	42	--
	43	RECEP & LTG ROOM 211	20 A	1	12	12	12	1.25	0.51	0						--	--	--	1	20 A	SPARE	44	--
	45	RESTROOM ROOM 211	20 A	1	12	12	12	0.36			0.15	0				--	--	--	1	20 A	SPARE	46	--
	47	COFFEE ROOM 211	20 A	1	12	12	12	2.39					1	0		--	--	--	1	20 A	SPARE	48	--
	49	MICROWAVE ROOM 211	20 A	1	12	12	12	2.8	1.2	0						--	--	--	1	20 A	SPARE	50	--
	51	RECEP & LTG ROOM 213	20 A	1	12	12	12	1.4			0.51	0				--	--	--	1	20 A	SPARE	52	--
	53	RESTROOM ROOM 213	20 A	1	12	12	12	0.4					0.15	0		--	--	--	1	20 A	SPARE	54	--
	55	COFFEE ROOM 213	20 A	1	12	12	12	2.7	1	0						--	--	--	1	20 A	SPARE	56	--
	57	MICROWAVE ROOM 213	20 A	1	10	10	10	1.93			1.2	0				--	--	--	1	20 A	SPARE	58	--
--	59	SPARE	20 A	1	--	--	--						0	0		--	--	--	1	20 A	SPARE	60	--
								Total Load:	25.07 kVA		24.21 kVA		24.81 kVA										
								Total Amps:	209.66		201.75		207.54										

LOAD SUMMARY

LOAD CLASSIFICATION	CONNECTED LOAD	DEMAND FACTOR	ESTIMATED DEMAND
Hotel/Motel Lighting	16.468 kVA	50.00%	8.234 kVA
Receptacles	2.62 kVA	100.00%	2.62 kVA
Hotel Room Appliance	55 kVA	100.00%	55 kVA

TOTALS*	
TOTAL CONNECTED LOAD:	74.09 kVA
TOTAL ESTIMATED DEMAND LOAD:	65.854 kVA
TOTAL CONNECTED AMPS:	205.65 A
TOTAL ESTIMATED DEMAND AMPS:	182.8 A

*TOTAL DEMAND CALCS SUBTRACT ANY REDUNDANT LOAD AND THE SMALLER OF ANY NONCOINCIDENT HVAC LOADS. THIS CALC IS DONE AT EACH PANEL.

CIRCUIT KEY NOTES:

PANEL R1

MOUNTING: SURFACE
ENCLOSURE: NEMA PB 1
FED FROM: 100 A/3P @ MSB-H
LOCATION: ELECTRICAL 134

SINGLE TUB
SOLID NEUTRAL
GROUND BUS

MAIN: 100 A MLO
VOLTS: 120/208 Wye
PHASE: 3
WIRE: 4
SCCR: 10 kA
ISC: 3.68 kA

NOTES:

KEY	CKT NO.	LOAD DESCRIPTION	OCPD AMPS	P	WIRE SIZE H	WIRE SIZE N	WIRE SIZE G	VD %	A	A	B	B	C	C	VD %	WIRE SIZE G	WIRE SIZE N	WIRE SIZE H	OCPD P	OCPD AMPS	LOAD DESCRIPTION	CKT NO.	KEY
	1	RECEP & LTG ROOM 108	20 A	1	12	12	12	0.36	0.51	0.49					1.07	12	12	12	1	20 A	RECEP & LTG ROOM 105	2	
	3	RESTROOM ROOM 108	20 A	1	12	12	12	0.1			0.15	0.17			0.39	12	12	12	1	20 A	RESTROOM ROOM 105	4	
	5	COFFEE ROOM 108	20 A	1	12	12	12	0.79					1	1	2.26	12	12	12	1	20 A	COFFEE ROOM 105	6	
	7	MICROWAVE ROOM 108	20 A	1	12	12	12	0.99	1.2	1.2					1.67	10	10	10	1	20 A	MICROWAVE ROOM 108	8	
	9	RECEP & LTG ROOM 106	20 A	1	12	12	12	0.52			0.49	0.49			0.89	12	12	12	1	20 A	RECEP & LTG ROOM 107	10	
	11	RESTROOM ROOM 106	20 A	1	12	12	12	0.19					0.17	0.17	0.32	12	12	12	1	20 A	RESTROOM ROOM 107	12	
	13	COFFEE ROOM 106	20 A	1	12	12	12	1.13	1	1					1.89	12	12	12	1	20 A	COFFEE ROOM 107	14	
	15	MICROWAVE ROOM 106	20 A	1	12	12	12	1.4			1.2	1.2			2.3	12	12	12	1	20 A	MICROWAVE ROOM 108	16	
	17	RECEP & LTG ROOM 104	20 A	1	12	12	12	0.7					0.49	0.51	0.75	12	12	12	1	20 A	RECEP & LTG ROOM 109	18	
	19	RESTROOM ROOM 104	20 A	1	12	12	12	0.26	0.17	0.15					0.22	12	12	12	1	20 A	RESTROOM ROOM 109	20	
	21	COFFEE ROOM 104	20 A	1	12	12	12	1.52			1	1			1.55	12	12	12	1	20 A	COFFEE ROOM 109	22	
	23	MICROWAVE ROOM 104	20 A	1	12	12	12	1.87					1.2	1.2	1.9	12	12	12	1	20 A	MICROWAVE ROOM 108	24	
	25	RECEP & LTG ROOM 102	20 A	1	12	12	12	0.9	0.51	0						--	--	--	1	20 A	SPARE	26	--
	27	RESTROOM ROOM 102	20 A	1	12	12	12	0.27			0.15	0				--	--	--	1	20 A	SPARE	28	--
	29	COFFEE ROOM 102	20 A	1	12	12	12	1.86					1	0		--	--	--	1	20 A	SPARE	30	--
	31	MICROWAVE ROOM 102	20 A	1	12	12	12	2.27	1.2	0						--	--	--	1	20 A	SPARE	32	--
	33	RECEP & LTG ROOM 100	20 A	1	12	12	12	1.05			0.5	0				--	--	--	1	20 A	SPARE	34	--
	35	RESTROOM ROOM 100	20 A	1	12	12	12	0.33					0.15	0		--	--	--	1	20 A	SPARE	36	--
	37	COFFEE ROOM 100	20 A	1	12	12	12	2.18	1	0						--	--	--	1	20 A	SPARE	38	--
	39	MICROWAVE ROOM 100	20 A	1	10	10	10	1.61			1.2	0				--	--	--	1	20 A	SPARE	40	--
	41	RECEP & LTG ROOM 101	20 A	1	12	12	12	1.45					0.51	0		--	--	--	1	20 A	SPARE	42	--
	43	RESTROOM ROOM 101	20 A	1	12	12	12	0.43	0.15	0						--	--	--	1	20 A	SPARE	44	--
	45	COFFEE ROOM 101	20 A	1	10	10	10	1.78			1	0				--	--	--	1	20 A	SPARE	46	--
	47	MICROWAVE ROOM 101	20 A	1	10	10	10	2.16					1.2	0		--	--	--	1	20 A	SPARE	48	--
	49	RECEP & LTG ROOM 103	20 A	1	12	12	12	1.28	0.51	0						--	--	--	1	20 A	SPARE	50	--
	51	RESTROOM ROOM 103	20 A	1	12	12	12	0.38			0.15	0				--	--	--	1	20 A	SPARE	52	--
	53	COFFEE ROOM 103	20 A	1	10	10	10	1.57					1	0		--	--	--	1	20 A	SPARE	54	--
	55	MICROWAVE ROOM 103	20 A	1	10	10	10	1.92	1.2	0						--	--	--	1	20 A	SPARE	56	--
--	57	SPARE	20 A	1	--	--	--				0	0				--	--	--	1	20 A	SPARE	58	--
--	59	SPARE	20 A	1	--	--	--						0	0		--	--	--	1	20 A	SPARE	60	--
								Total Load:	10.28 kVA		8.69 kVA		9.60 kVA										
								Total Amps:	86.79		72.45		81.16										

LOAD SUMMARY

LOAD CLASSIFICATION	CONNECTED LOAD	DEMAND FACTOR	ESTIMATED DEMAND
Hotel/Motel Lighting	6.57 kVA	50.00%	3.285 kVA
Hotel Room Appliance	22 kVA	100.00%	22 kVA

TOTALS*	
TOTAL CONNECTED LOAD:	28.57 kVA
TOTAL ESTIMATED DEMAND LOAD:	25.285 kVA
TOTAL CONNECTED AMPS:	79.30 A
TOTAL ESTIMATED DEMAND AMPS:	70.2 A

*TOTAL DEMAND CALCS SUBTRACT ANY REDUNDANT LOAD AND THE SMALLER OF ANY NONCOINCIDENT HVAC LOADS. THIS CALC IS DONE AT EACH PANEL.

CIRCUIT KEY NOTES:

IMEG
9000 E PIMA CENTER PARKWAY
SUITE 320
SCOTTSDALE, AZ 85258
P: 480.222.3771
www.imegcorp.com

IMEG CORP. RESERVES PROPRIETARY RIGHTS, INCLUDING COPYRIGHTS, TO THIS DRAWING AND THE DATA SHOWN THEREON. SAID DRAWING AND/OR DATA ARE THE EXCLUSIVE PROPERTY OF IMEG CORP. AND SHALL NOT BE USED OR REPRODUCED FOR ANY OTHER PROJECT WITHOUT THE EXPRESS WRITTEN APPROVAL AND PARTICIPATION OF IMEG CORP. ©2023 IMEG CORP.

0 1 2 3
REF. SCALE IN INCHES
PROJECT #23002327.00

STAMP

DYRON MURPHY ARCHITECTS, P.C.
4505 Montbel Place NE, Albuquerque, New Mexico 87107

SHIPROCK PINNACLE HOTEL & RESTAURANT
SHIPROCK, NEW MEXICO
100% CONSTRUCTION DOCUMENTS
ISSUED FOR CONSTRUCTION
NOVEMBER 3, 2023

PROJECT NUMBER	DRAWN BY	PROJ MGR
2022.10	IMEG	IMEG

ELECTRICAL PANEL SCHEDULES - HOTEL

Sheet Title

Sheet Number of

E503

11/1/2023 1:02:06 PM
Autodesk Docs://23002327.00 - Shiprock Pinnacle Hotel & Restaurant/MEP22_23002327.00_Shiprock Pinnacle Hotel_C.rvt
DYRON MURPHY ARCHITECTS, P.C.

PANEL R3B

MOUNTING: SURFACE
ENCLOSURE: NEMA PB 1
FED FROM: 225 A/3P @ R3A
LOCATION: STORAGE C106

SINGLE TUB
SOLID NEUTRAL
GROUND BUS

MAIN: 225 A MLO
VOLTS: 120/208 Wye
PHASE: 3
WIRE: 4
SCCR: 22 kA
ISC: 16.50 kA

NOTES:

KEY	CKT NO.	LOAD DESCRIPTION	OCPD AMPS	P	WIRE SIZE H	WIRE SIZE N	WIRE SIZE G	VD %	A	A	B	B	C	C	VD %	WIRE SIZE G	WIRE SIZE N	WIRE SIZE H	P	OCPD AMPS	LOAD DESCRIPTION	CKT NO.	KEY
--	1	SPARE	20 A	1	--	--	--		0	0.49					2	12	12	12	1	20 A	RECEP & LTG ROOM 314	2	
--	3	SPARE	20 A	1	--	--	--				0	0.17			0.68	12	12	12	1	20 A	RESTROOM ROOM 314	4	
	5	RECEP & LTG ROOM 300	20 A	1	12	12	12	0.76					0.49	1	2.34	10	10	10	1	20 A	COFFEE ROOM 314	6	
	7	RESTROOM ROOM 300	20 A	1	12	12	12	0.26	0.17	1.2					2.78	10	10	10	1	20 A	MICROWAVE ROOM 314	8	
	9	COFFEE ROOM 300	20 A	1	12	12	12	1.48			1	0.49			2.11	12	12	12	1	20 A	RECEP & LTG ROOM 316	10	
	11	MICROWAVE ROOM 300	20 A	1	12	12	12	1.73					1.2	0.17	0.74	12	12	12	1	20 A	RESTROOM ROOM 316	12	
	13	RECEP & LTG ROOM 302	20 A	1	12	12	12	0.9	0.49	1					2.57	10	10	10	1	20 A	COFFEE ROOM 316	14	
	15	RESTROOM ROOM 302	20 A	1	12	12	12	0.32			0.17	1.2			2.01	8	8	8	1	20 A	MICROWAVE ROOM 316	16	
	17	COFFEE ROOM 302	20 A	1	12	12	12	1.83					1	0.51	2.37	12	12	12	1	20 A	RECEP & LTG ROOM 318	18	
	19	MICROWAVE ROOM 302	20 A	1	12	12	12	2.15	1.2	0.15					0.69	12	12	12	1	20 A	RESTROOM ROOM 318	20	
	21	RECEP & LTG ROOM 304	20 A	1	12	12	12	1.09			0.49	1			2.78	10	10	10	1	20 A	COFFEE ROOM 318	22	
	23	RESTROOM ROOM 304	20 A	1	12	12	12	0.38					0.17	1.2	2.19	8	8	8	1	20 A	MICROWAVE ROOM 318	24	
	25	COFFEE ROOM 304	20 A	1	12	12	12	2.16	1	0.51					2.52	12	12	12	1	20 A	RECEP & LTG ROOM 320	26	
	27	MICROWAVE ROOM 304	20 A	1	12	12	12	2.55			1.2	0.15			0.73	12	12	12	1	20 A	RESTROOM ROOM 320	28	
	29	RECEP & LTG ROOM 306	20 A	1	12	12	12	1.27					0.49	1	2.97	10	10	10	1	20 A	COFFEE ROOM 320	30	
	31	RESTROOM ROOM 306	20 A	1	12	12	12	0.45	0.17	1.2					2.33	8	8	8	1	20 A	MICROWAVE ROOM 320	32	
	33	COFFEE ROOM 306	20 A	1	12	12	12	2.54			1	0.51			2.69	12	12	12	1	20 A	RECEP & LTG ROOM 322	34	
	35	MICROWAVE ROOM 306	20 A	1	12	12	12	3					1.2	0.15	0.78	12	12	12	1	20 A	RESTROOM ROOM 322	36	
	37	RECEP & LTG ROOM 308	20 A	1	12	12	12	1.5	0.51	1					2.09	8	8	8	1	20 A	COFFEE ROOM 322	38	
	39	RESTROOM ROOM 308	20 A	1	12	12	12	0.43			0.15	1.2			2.49	8	8	8	1	20 A	MICROWAVE ROOM 322	40	
	41	COFFEE ROOM 308	20 A	1	12	12	12	2.89					1	0.51	2.85	12	12	12	1	20 A	RECEP & LTG ROOM 324	42	
	43	MICROWAVE ROOM 308	20 A	1	10	10	10	2.07	1.2	0.15					0.83	12	12	12	1	20 A	RESTROOM ROOM 324	44	
	45	RECEP & LTG ROOM 310	20 A	1	12	12	12	1.66			0.51	1			2.22	8	8	8	1	20 A	COFFEE ROOM 324	46	
	47	RESTROOM ROOM 310	20 A	1	12	12	12	0.5					0.15	1.2	2.64	8	8	8	1	20 A	MICROWAVE ROOM 324	48	
	49	COFFEE ROOM 310	20 A	1	10	10	10	1.9	1	0.51					1.82	10	10	10	1	20 A	RECEP & LTG ROOM 326	50	
	51	MICROWAVE ROOM 310	20 A	1	10	10	10	2.29			1.2	0.15			0.9	12	12	12	1	20 A	RESTROOM ROOM 326	52	
	53	RECEP & LTG ROOM 312	20 A	1	12	12	12	1.82					0.51	1	2.35	8	8	8	1	20 A	COFFEE ROOM 326	54	
	55	RESTROOM ROOM 312	20 A	1	12	12	12	0.53	0.15	1.2					2.8	8	8	8	1	20 A	MICROWAVE ROOM 326	56	
	57	COFFEE ROOM 312	20 A	1	10	10	10	2.13			1	0				--	--	--	1	20 A	SPARE	58	--
	59	MICROWAVE ROOM 312	20 A	1	10	10	10	2.53					1.2	0		--	--	--	1	20 A	SPARE	60	--
								Total Load:	13.29 kVA		12.58 kVA		14.14 kVA										
								Total Amps:	111.62		104.83		118.72										

LOAD SUMMARY

LOAD CLASSIFICATION	CONNECTED LOAD	DEMAND FACTOR	ESTIMATED DEMAND	TOTALS*	
Hotel/Motel Lighting	9.204 kVA	50.00%	4.602 kVA		
Hotel Room Appliance	30.8 kVA	100.00%	30.8 kVA	TOTAL CONNECTED LOAD:	40.00 kVA
				TOTAL ESTIMATED DEMAND LOAD:	35.402 kVA
				TOTAL CONNECTED AMPS:	111.04 A
				TOTAL ESTIMATED DEMAND AMPS:	98.3 A

*TOTAL DEMAND CALCS SUBTRACT ANY REDUNDANT LOAD AND THE SMALLER OF ANY NONCOINCIDENT HVAC LOADS. THIS CALC IS DONE AT EACH PANEL.

CIRCUIT KEY NOTES:

PANEL R3A

MOUNTING: SURFACE
ENCLOSURE: NEMA PB 1
FED FROM: 225 A/3P @ MSB-H
LOCATION: STORAGE C106

SINGLE TUB
SOLID NEUTRAL
GROUND BUS

MAIN: 225 A MLO
VOLTS: 120/208 Wye
PHASE: 3
WIRE: 4
SCCR: 22 kA
ISC: 18.37 kA

NOTES: FEED THRU LUGS. LOADS FROM PANEL R3B REFLECTED IN LOAD SUMMARY BELOW.

KEY	CKT NO.	LOAD DESCRIPTION	OCPD AMPS	P	WIRE SIZE H	WIRE SIZE N	WIRE SIZE G	VD %	A	A	B	B	C	C	VD %	WIRE SIZE G	WIRE SIZE N	WIRE SIZE H	P	OCPD AMPS	LOAD DESCRIPTION	CKT NO.	KEY
--	1	SPARE	20 A	1	--	--	--		0	0.49					1.5	12	12	12	1	20 A	RECEP & LTG ROOM 315	2	
	3	RECEP & LTG ROOM 301	20 A	1	12	12	12	0.38			0.51	0.17			0.54	12	12	12	1	20 A	RESTROOM ROOM 315	4	
	5	RESTROOM ROOM 301	20 A	1	12	12	12	0.1					0.15	1	1.85	10	10	10	1	20 A	COFFEE ROOM 315	6	
	7	COFFEE ROOM 301	20 A	1	12	12	12	0.67	1	1.2					2.19	10	10	10	1	20 A	MICROWAVE ROOM 315	8	
	9	MICROWAVE ROOM 301	20 A	1	12	12	12	0.76			1.2	0.49			1.7	12	12	12	1	20 A	RECEP & LTG ROOM 317	10	
	11	RECEP & LTG ROOM 303	20 A	1	12	12	12	0.54					0.51	0.17	0.6	12	12	12	1	20 A	RESTROOM ROOM 317	12	
	13	RESTROOM ROOM 303	20 A	1	12	12	12	0.15	0.15	1					2.07	10	10	10	1	20 A	COFFEE ROOM 317	14	
	15	COFFEE ROOM 303	20 A	1	12	12	12	1			1	1.2			2.46	10	10	10	1	20 A	MICROWAVE ROOM 317	16	
	17	MICROWAVE ROOM 303	20 A	1	12	12	12	1.15					1.2	0.51	1.95	12	12	12	1	20 A	RECEP & LTG ROOM 319	18	
	19	RECEP & LTG ROOM 305	20 A	1	12	12	12	0.7	0.49	0.15					0.57	12	12	12	1	20 A	RESTROOM ROOM 319	20	
	21	RESTROOM ROOM 305	20 A	1	12	12	12	0.24			0.17	1			2.29	10	10	10	1	20 A	COFFEE ROOM 319	22	
	23	COFFEE ROOM 305	20 A	1	12	12	12	1.35					1	1.2	2.7	10	10	10	1	20 A	MICROWAVE ROOM 319	24	
	25	MICROWAVE ROOM 305	20 A	1	12	12	12	1.57	1.2	0.56					2.3	12	12	12	1	20 A	RECEP & LTG ROOM 321	26	
	27	RECEP & LTG ROOM 307	20 A	1	12	12	12	0.88			0.49	0.15			0.63	12	12	12	1	20 A	RESTROOM ROOM 321	28	
	29	RESTROOM ROOM 307	20 A	1	12	12	12	0.3					0.17	1	2.48	10	10	10	1	20 A	COFFEE ROOM 321	30	
	31	COFFEE ROOM 307	20 A	1	12	12	12	1.7	1	1.2					2.95	10	10	10	1	20 A	MICROWAVE ROOM 321	32	
	33	MICROWAVE ROOM 307	20 A	1	12	12	12	2.02			1.2	0.72			1.05	12	12	12	1	20 A	Receptacles Room C106	34	
	35	RECEP & LTG ROOM 309	20 A	1	12	12	12	1.08					0.51	0.9	2.72	10	10	10	1	20 A	Receptacles Room C137, C165	36	
	37	RESTROOM ROOM 309	20 A	1	12	12	12	0.3	0.15	0.5					2.38	12	12	12	1	20 A	VENDING MACHINE	38	
	39	COFFEE ROOM 309	20 A	1	12	12	12	2.07			1	0.5			2.42	12	12	12	1	20 A	ICE MACHINE	40	
	41	MICROWAVE ROOM 309	20 A	1	12	12	12	2.4					1.2	0		--	--	--	1	20 A	SPARE	42	--
	43	RECEP & LTG ROOM 311	20 A	1	12	12	12	1.25	0.51	0						--	--	--	1	20 A	SPARE	44	--
	45	RESTROOM ROOM 311	20 A	1	12	12	12	0.36			0.15	0				--	--	--	1	20 A	SPARE	46	--
	47	COFFEE ROOM 311	20 A	1	12	12	12	2.4					1	0		--	--	--	1	20 A	SPARE	48	--
	49	MICROWAVE ROOM 311	20 A	1	12	12	12	2.8	1.2	0						--	--	--	1	20 A	SPARE	50	--
	51	RECEP & LTG ROOM 313	20 A	1	12	12	12	1.4			0.51	0				--	--	--	1	20 A	SPARE	52	--
	53	RESTROOM ROOM 313	20 A	1	12	12	12	0.4					0.15	0		--	--	--	1	20 A	SPARE	54	--
	55	COFFEE ROOM 313	20 A	1	12	12	12	2.71	1	0						--	--	--	1	20 A	SPARE	56	--
	57	MICROWAVE ROOM 313	20 A	1	10	10	10	1.9			1.2	0				--	--	--	1	20 A	SPARE	58	--
--	59	SPARE	20 A	1	--	--	--						0	0		--	--	--	1	20 A	SPARE	60	--
								Total Load:	25.07 kVA		24.24 kVA		24.80 kVA										
								Total Amps:	209.64		201.97		207.39										

LOAD SUMMARY

LOAD CLASSIFICATION	CONNECTED LOAD	DEMAND FACTOR	ESTIMATED DEMAND	TOTALS*	
Hotel/Motel Lighting	16.486 kVA	50.00%	8.243 kVA		
Receptacles	2.62 kVA	100.00%	2.62 kVA	TOTAL CONNECTED LOAD:	74.11 kVA
Hotel Room Appliance	55 kVA	100.00%	55 kVA	TOTAL ESTIMATED DEMAND LOAD:	65.863 kVA
				TOTAL CONNECTED AMPS:	205.70 A
				TOTAL ESTIMATED DEMAND AMPS:	182.8 A

*TOTAL DEMAND CALCS SUBTRACT ANY REDUNDANT LOAD AND THE SMALLER OF ANY NONCOINCIDENT HVAC LOADS. THIS CALC IS DONE AT EACH PANEL.

CIRCUIT KEY NOTES:

PANEL R2B

MOUNTING: SURFACE
ENCLOSURE: NEMA PB 1
FED FROM: 225 A/3P @ R2A
LOCATION: Room C343

SINGLE TUB
SOLID NEUTRAL
GROUND BUS

MAIN: 225 A MLO
VOLTS: 120/208 Wye
PHASE: 3
WIRE: 4
SCCR: 22 kA
ISC: 18.55 kA

NOTES:

KEY	CKT NO.	LOAD DESCRIPTION	OCPD AMPS	P	WIRE SIZE H	WIRE SIZE N	WIRE SIZE G	VD %	A	A	B	B	C	C	VD %	WIRE SIZE G	WIRE SIZE N	WIRE SIZE H	P	OCPD AMPS	LOAD DESCRIPTION	CKT NO.	KEY
--	1	SPARE	20 A	1	--	--	--		0	0.49					2	12	12	12	1	20 A	RECEP & LTG ROOM 214	2	
--	3	SPARE	20 A	1	--	--	--				0	0.17			0.68	12	12	12	1	20 A	RESTROOM ROOM 214	4	
	5	RECEP & LTG ROOM 200	20 A	1	12	12	12	0.78					0.5	1	2.34	10	10	10	1	20 A	COFFEE ROOM 214	6	
	7	RESTROOM ROOM 200	20 A	1	12	12	12	0.23	0.15	1.2					2.78	10	10	10	1	20 A	MICROWAVE ROOM 214	8	
	9	COFFEE ROOM 200	20 A	1	12	12	12	1.49			1	0.49			2.1	12	12	12	1	20 A	RECEP & LTG ROOM 216	10	
	11	MICROWAVE ROOM 200	20 A	1	12	12	12	1.74					1.2	0.17	0.74	12	12	12	1	20 A	RESTROOM ROOM 216	12	
	13	RECEP & LTG ROOM 202	20 A	1	12	12	12	0.95	0.51	1					2.56	10	10	10	1	20 A	COFFEE ROOM 216	14	
	15	RESTROOM ROOM 202	20 A	1	12	12	12	0.3			0.15	1.2			2.01	8	8	8	1	20 A	MICROWAVE ROOM 216	16	
	17	COFFEE ROOM 202	20 A	1	12	12	12	1.81					1	0.51	2.36	12	12	12	1	20 A	RECEP & LTG ROOM 218	18	
	19	MICROWAVE ROOM 202	20 A	1	12	12	12	2.13	1.2	0.15					0.69	12	12	12	1	20 A	RESTROOM ROOM 218	20	
	21	RECEP & LTG ROOM 204	20 A	1	12	12	12	1.09			0.49	1			2.78	10	10	10	1	20 A	COFFEE ROOM 218	22	
	23	RESTROOM ROOM 204	20 A	1	12	12	12	0.38					0.17	1.2	2.18	8	8	8	1	20 A	MICROWAVE ROOM 218	24	
	25	COFFEE ROOM 204	20 A	1	12	12	12	2.15	1	0.51					2.52	12	12	12	1	20 A	RECEP & LTG ROOM 220	26	
	27	MICROWAVE ROOM 204	20 A	1	12	12	12	2.54			1.2	0.15			0.73	12	12	12	1	20 A	RESTROOM ROOM 220	28	
	29	RECEP & LTG ROOM 206	20 A	1	12	12	12	1.27					0.49	1	2.97	10	10	10	1	20 A	COFFEE ROOM 220	30	
	31	RESTROOM ROOM 206	20 A	1	12	12	12	0.45	0.17	1.2					2.33	8	8	8	1	20 A	MICROWAVE ROOM 220	32	
	33	COFFEE ROOM 206	20 A	1	12	12	12	2.53			1	0.51			2.69	12	12	12	1	20 A	RECEP & LTG ROOM 222	34	
	35	MICROWAVE ROOM 206	20 A	1	12	12	12	2.99					1.2	0.15	0.8	12	12	12	1	20 A	RESTROOM ROOM 222	36	
	37	RECEP & LTG ROOM 208	20 A	1	12	12	12	1.49	0.51	1					2.09	8	8	8	1	20 A	COFFEE ROOM 222	38	
	39	RESTROOM ROOM 208	20 A	1	12	12	12	0.43			0.15	1.2			2.49	8	8	8	1	20 A	MICROWAVE ROOM 222	40	
	41	COFFEE ROOM 208	20 A	1	12	12	12	2.88					1	0.51	2.85	12	12	12	1	20 A	RECEP & LTG ROOM 224	42	
	43	MICROWAVE ROOM 208	20 A	1	10	10	10	2.06	1.2	0.15					0.83	12	12	12	1	20 A	RESTROOM ROOM 224	44	
	45	RECEP & LTG ROOM 210	20 A	1	12	12	12	1.65			0.51	1			2.22	8	8	8	1	20 A	COFFEE ROOM 224	46	
	47	RESTROOM ROOM 210	20 A	1	12	12	12	0.5					0.15	1.2	2.64	8	8	8	1	20 A	MICROWAVE ROOM 224	48	
	49	COFFEE ROOM 210	20 A	1	10	10	10	1.93	1	0.51					1.82	10	10	10	1	20 A	RECEP & LTG ROOM 226	50	
	51	MICROWAVE ROOM 210	20 A	1	10	10	10	2.29			1.2	0.15			0.9	12	12	12	1	20 A	RESTROOM ROOM 226	52	
	53	RECEP & LTG ROOM 212	20 A	1	12	12	12	1.81					0.51	1	2.34	8	8	8	1	20 A	COFFEE ROOM 226	54	
	55	RESTROOM ROOM 212	20 A	1	12	12	12	0.52	0.15	1.2					2.79	8	8	8	1	20 A	MICROWAVE ROOM 226	56	
	57	COFFEE ROOM 212	20 A	1	10	10	10	2.12			1	0				--	--	--	1	20 A	SPARE	58	--
	59	MICROWAVE ROOM 212	20 A	1	10	10	10	2.52					1.2	0		--	--	--	1	20 A	SPARE	60	--
								Total Load:	13.28 kVA		12.55 kVA		14.15 kVA										
								Total Amps:	111.62		104.62		118.85										

LOAD SUMMARY

LOAD CLASSIFICATION	CONNECTED LOAD	DEMAND FACTOR	ESTIMATED DEMAND	TOTALS*	
Hotel/Motel Lighting	9.186 kVA	50.00%	4.593 kVA		
Hotel Room Appliance	30.8 kVA	100.00%	30.8 kVA	TOTAL CONNECTED LOAD:	39.99 kVA
				TOTAL ESTIMATED DEMAND LOAD:	35.393 kVA
				TOTAL CONNECTED AMPS:	110.99 A
				TOTAL ESTIMATED DEMAND AMPS:	98.2 A

*TOTAL DEMAND CALCS SUBTRACT ANY REDUNDANT LOAD AND THE SMALLER OF ANY NONCOINCIDENT HVAC LOADS. THIS CALC IS DONE AT EACH PANEL.

CIRCUIT KEY NOTES:

PANEL R4B

MOUNTING: SURFACE
ENCLOSURE: NEMA PB 1
FED FROM: 225 A/3P @ R4A
LOCATION: STORAGE C557

SINGLE TUB
SOLID NEUTRAL
GROUND BUS

MAIN: 225 A MLO
VOLTS: 120/208 Wye
PHASE: 3
WIRE: 4
SCCR: 22 kA
ISC: 15.27 kA

NOTES:

KEY	CKT NO.	LOAD DESCRIPTION	OCPD AMPS	P	WIRE SIZE H	WIRE SIZE N	WIRE SIZE G	VD %	A	A	B	B	C	C	VD %	WIRE SIZE G	WIRE SIZE N	WIRE SIZE H	P	OCPD AMPS	LOAD DESCRIPTION	CKT NO.	KEY
--	1	SPARE	20 A	1	--	--	--		0	0.49					1.96	12	12	12	1	20 A	RECEP & LTG ROOM 414	2	
--	3	SPARE	20 A	1	--	--	--				0	0.17			0.69	12	12	12	1	20 A	RESTROOM ROOM 414	4	
	5	RECEP & LTG ROOM 400	20 A	1	12	12	12	0.8					0.49	1	2.39	10	10	10	1	20 A	COFFEE ROOM 414	6	
	7	RESTROOM ROOM 400	20 A	1	12	12	12	0.3	0.17	1.2					2.84	10	10	10	1	20 A	MICROWAVE ROOM 414	8	
	9	COFFEE ROOM 400	20 A	1	12	12	12	1.55			1	0.49			2.14	12	12	12	1	20 A	RECEP & LTG ROOM 416	10	
	11	MICROWAVE ROOM 400	20 A	1	12	12	12	2					1.2	0.17	0.76	12	12	12	1	20 A	RESTROOM ROOM 416	12	
	13	RECEP & LTG ROOM 402	20 A	1	12	12	12	0.96	0.49	1					2.61	10	10	10	1	20 A	COFFEE ROOM 416	14	
	15	RESTROOM ROOM 402	20 A	1	12	12	12	0.33			0.17	1.2			2.05	8	8	8	1	20 A	MICROWAVE ROOM 416	16	
	17	COFFEE ROOM 402	20 A	1	12	12	12	1.88					1	0.51	2.4	12	12	12	1	20 A	RECEP & LTG ROOM 418	18	
	19	MICROWAVE ROOM 402	20 A	1	12	12	12	2.2	1.2	0.15					0.7	12	12	12	1	20 A	RESTROOM ROOM 418	20	
	21	RECEP & LTG ROOM 404	20 A	1	12	12	12	1.13			0.49	1			2.83	10	10	10	1	20 A	COFFEE ROOM 418	22	
	23	RESTROOM ROOM 404	20 A	1	12	12	12	0.4					0.17	1.2	2.22	8	8	8	1	20 A	MICROWAVE ROOM 418	24	
	25	COFFEE ROOM 404	20 A	1	12	12	12	2.23	1	0.51					2.56	12	12	12	1	20 A	RECEP & LTG ROOM 420	26	
	27	MICROWAVE ROOM 404	20 A	1	12	12	12	2.64			1.2	0.15			0.74	12	12	12	1	20 A	RESTROOM ROOM 420	28	
	29	RECEP & LTG ROOM 406	20 A	1	12	12	12	1.3					0.49	1	1.99	8	8	8	1	20 A	COFFEE ROOM 420	30	
	31	RESTROOM ROOM 406	20 A	1	12	12	12	0.46	0.17	1.2					2.37	8	8	8	1	20 A	MICROWAVE ROOM 420	32	
	33	COFFEE ROOM 406	20 A	1	12	12	12	2.6			1	0.51			2.73	12	12	12	1	20 A	RECEP & LTG ROOM 422	34	
	35	MICROWAVE ROOM 406	20 A	1	10	10	10	1.87					1.2	0.15	0.79	12	12	12	1	20 A	RESTROOM ROOM 422	36	
	37	RECEP & LTG ROOM 408	20 A	1	12	12	12	1.53	0.51	1					2.12	8	8	8	1	20 A	COFFEE ROOM 422	38	
	39	RESTROOM ROOM 408	20 A	1	12	12	12	0.44			0.15	1.2			2.53	8	8	8	1	20 A	MICROWAVE ROOM 422	40	
	41	COFFEE ROOM 408	20 A	1	12	12	12	2.96					1	0.51	2.89	12	12	12	1	20 A	RECEP & LTG ROOM 424	42	
	43	MICROWAVE ROOM 408	20 A	1	10	10	10	2.12	1.2	0.15					0.84	12	12	12	1	20 A	RESTROOM ROOM 424	44	
	45	RECEP & LTG ROOM 410	20 A	1	12	12	12	1.69			0.51	1			2.25	8	8	8	1	20 A	COFFEE ROOM 424	46	
	47	RESTROOM ROOM 410	20 A	1	12	12	12	0.49					0.15	1.2	2.68	8	8	8	1	20 A	MICROWAVE ROOM 424	48	
	49	COFFEE ROOM 410	20 A	1	10	10	10	1.98	1	0.51					1.84	10	10	10	1	20 A	RECEP & LTG ROOM 426	50	
	51	MICROWAVE ROOM 410	20 A	1	10	10	10	2.35			1.2	0.15			0.89	12	12	12	1	20 A	RESTROOM ROOM 426	52	
	53	RECEP & LTG ROOM 412	20 A	1	12	12	12	1.85					0.51	1	2.37	8	8	8	1	20 A	COFFEE ROOM 426	54	
	55	RESTROOM ROOM 412	20 A	1	12	12	12	0.54	0.15	1.2					2.83	8	8	8	1	20 A	MICROWAVE ROOM 426	56	
	57	COFFEE ROOM 412	20 A	1	10	10	10	2.17			1	0				--	--	--	1	20 A	SPARE	58	--
	59	MICROWAVE ROOM 412	20 A	1	10	10	10	2.58					1.2	0		--	--	--	1	20 A	SPARE	60	--
								Total Load:	13.29 kVA		12.58 kVA		14.14 kVA										
								Total Amps:	111.62		104.83		118.72										

LOAD SUMMARY

LOAD CLASSIFICATION	CONNECTED LOAD	DEMAND FACTOR	ESTIMATED DEMAND	TOTALS*	
Hotel/Motel Lighting	9.204 kVA	50.00%	4.602 kVA		
Hotel Room Appliance	30.8 kVA	100.00%	30.8 kVA	TOTAL CONNECTED LOAD:	40.00 kVA
				TOTAL ESTIMATED DEMAND LOAD:	35.402 kVA
				TOTAL CONNECTED AMPS:	111.04 A
				TOTAL ESTIMATED DEMAND AMPS:	98.3 A

*TOTAL DEMAND CALCS SUBTRACT ANY REDUNDANT LOAD AND THE SMALLER OF ANY NONCOINCIDENT HVAC LOADS. THIS CALC IS DONE AT EACH PANEL.

CIRCUIT KEY NOTES:

PANEL R4A

MOUNTING: SURFACE
ENCLOSURE: NEMA PB 1
FED FROM: 225 A/3P @ MSB-H
LOCATION: STORAGE C557

SINGLE TUB
SOLID NEUTRAL
GROUND BUS

MAIN: 225 A MLO
VOLTS: 120/208 Wye
PHASE: 3
WIRE: 4
SCCR: 22 kA
ISC: 16.84 kA

NOTES: FEED THRU LUGS. LOADS FROM PANEL R4B REFLECTED IN LOAD SUMMARY BELOW.

KEY	CKT NO.	LOAD DESCRIPTION	OCPD AMPS	P	WIRE SIZE H	WIRE SIZE N	WIRE SIZE G	VD %	A	A	B	B	C	C	VD %	WIRE SIZE G	WIRE SIZE N	WIRE SIZE H	P	OCPD AMPS	LOAD DESCRIPTION	CKT NO.	KEY
--	1	SPARE	20 A	1	--	--	--		0	0.49					1.56	12	12	12	1	20 A	RECEP & LTG ROOM 415	2	
	3	RECEP & LTG ROOM 401	20 A	1	12	12	12	0.4			0.51	0.17			0.55	12	12	12	1	20 A	RESTROOM ROOM 415	4	
	5	RESTROOM ROOM 401	20 A	1	12	12	12	0.12					0.15	1	1.89	10	10	10	1	20 A	COFFEE ROOM 415	6	
	7	COFFEE ROOM 401	20 A	1	12	12	12	0.74	1	1.2					2.24	10	10	10	1	20 A	MICROWAVE ROOM 415	8	
	9	MICROWAVE ROOM 401	20 A	1	12	12	12	0.8			1.2	0.49			1.74	12	12	12	1	20 A	RECEP & LTG ROOM 417	10	
	11	RECEP & LTG ROOM 403	20 A	1	12	12	12	0.58					0.51	0.17	0.62	12	12	12	1	20 A	RESTROOM ROOM 417	12	
	13	RESTROOM ROOM 403	20 A	1	12	12	12	0.16	0.15	1					2.12	10	10	10	1	20 A	COFFEE ROOM 417	14	
	15	COFFEE ROOM 403	20 A	1	12	12	12	1.07			1	1.2			2.5	10	10	10	1	20 A	MICROWAVE ROOM 417	16	
	17	MICROWAVE ROOM 403	20 A	1	12	12	12	1.2					1.2	0.51	1.99	12	12	12	1	20 A	RECEP & LTG ROOM 419	18	
	19	RECEP & LTG ROOM 405	20 A	1	12	12	12	0.73	0.49	0.15					0.58	12	12	12	1	20 A	RESTROOM ROOM 419	20	
	21	RESTROOM ROOM 405	20 A	1	12	12	12	0.25			0.17	1			2.33	10	10	10	1	20 A	COFFEE ROOM 419	22	
	23	COFFEE ROOM 405	20 A	1	12	12	12	1.42					1	1.2	2.77	10	10	10	1	20 A	MICROWAVE ROOM 419	24	
	25	MICROWAVE ROOM 405	20 A	1	12	12	12	1.66	1.2	0.56					2.37	12	12	12	1	20 A	RECEP & LTG ROOM 421	26	
	27	RECEP & LTG ROOM 407	20 A	1	12	12	12	0.9			0.49	0.15			0.64	12	12	12	1	20 A	RESTROOM ROOM 421	28	
	29	RESTROOM ROOM 407	20 A	1	12	12	12	0.32					0.17	1	2.53	10	10	10	1	20 A	COFFEE ROOM 421	30	
	31	COFFEE ROOM 407	20 A	1	12	12	12	1.8	1	1.2					1.98	8	8	8	1	20 A	MICROWAVE ROOM 421	32	
	33	MICROWAVE ROOM 407	20 A	1	12	12	12	2.1			1.2	0.72			1.03	12	12	12	1	20 A	Receptacles Room C494, C557	34	
	35	RECEP & LTG ROOM 409	20 A	1	12	12	12	1.1					0.51	0.9	2.79	10	10	10	1	20 A	Receptacles Room C494, C533, C578	36	
	37	RESTROOM ROOM 409	20 A	1	12	12	12	0.32	0.15	0.5					2.4	12	12	12	1	20 A	VENDING MACHINE	38	
	39	COFFEE ROOM 409	20 A	1	12	12	12	2.14			1	0.5			2.43	12	12	12	1	20 A	ICE MACHINE	40	
	41	MICROWAVE ROOM 409	20 A	1	12	12	12	2.52					1.2	1.2	1.88	10	10	10	1	20 A	BUILDING SIGN	42	
	43	RECEP & LTG ROOM 411	20 A	1	12	12	12	1.29	0.51	1.2					2.72	8	8	8	1	20 A	BUILDING SIGN	44	
	45	RESTROOM ROOM 411	20 A	1	12	12	12	0.37			0.15	0				--	--	--	1	20 A	SPARE	46	--
	47	COFFEE ROOM 411	20 A	1	12	12	12	2.47					1	0		--	--	--	1	20 A	SPARE	48	--
	49	MICROWAVE ROOM 411	20 A	1	12	12	12	2.92	1.2	0						--	--	--	1	20 A	SPARE	50	--
	51	RECEP & LTG ROOM 413	20 A	1	12	12	12	1.45			0.51	0				--	--	--	1	20 A	SPARE	52	--
	53	RESTROOM ROOM 413	20 A	1	12	12	12	0.42					0.15	0		--	--	--	1	20 A	SPARE	54	--
	55	COFFEE ROOM 413	20 A	1	12	12	12	2.78	1	0						--	--	--	1	20 A	SPARE	56	--
	57	MICROWAVE ROOM 413	20 A	1	10	10	10	1.99			1.2	0				--	--	--	1	20 A	SPARE	58	--
--	59	SPARE	20 A	1	--	--	--						0	0		--	--	--	1	20 A	SPARE	60	--
								Total Load:	26.27 kVA		24.24 kVA		26.00 kVA										
								Total Amps:	221.18		201.97		218.93										

LOAD SUMMARY

LOAD CLASSIFICATION	CONNECTED LOAD	DEMAND FACTOR	ESTIMATED DEMAND	TOTALS*	
Hotel/Motel Lighting	16.486 kVA	50.00%	8.243 kVA		
Power	2.4 kVA	100.00%	2.4 kVA	TOTAL CONNECTED LOAD:	76.51 kVA
Receptacles	2.62 kVA	100.00%	2.62 kVA	TOTAL ESTIMATED DEMAND LOAD:	68.263 kVA
Hotel Room Appliance	55 kVA	100.00%	55 kVA	TOTAL CONNECTED AMPS:	212.36 A
				TOTAL ESTIMATED DEMAND AMPS:	189.5 A

*TOTAL DEMAND CALCS SUBTRACT ANY REDUNDANT LOAD AND THE SMALLER OF ANY NONCOINCIDENT HVAC LOADS. THIS CALC IS DONE AT EACH PANEL.

CIRCUIT KEY NOTES:

IMEG
9000 E PIMA CENTER PARKWAY
SUITE 320
SCOTTSDALE, AZ 85258
P: 480.222.3771
www.imegcorp.com

IMEG CORP. RESERVES PROPRIETARY RIGHTS, INCLUDING COPYRIGHTS, TO THIS DRAWING AND THE DATA SHOWN THEREON. SAID DRAWING AND/OR DATA ARE THE EXCLUSIVE PROPERTY OF IMEG CORP. AND SHALL NOT BE USED OR REPRODUCED FOR ANY OTHER PROJECT WITHOUT THE EXPRESS WRITTEN APPROVAL AND PARTICIPATION OF IMEG CORP. ©2023 IMEG CORP.

REF. SCALE IN INCHES 0 1 2 3 PROJECT #23002327.00

STAMP

DYRON MURPHY ARCHITECTS, P.C.
4505 Montbel Place NE, Albuquerque, New Mexico 87107

SHIPROCK PINNACLE HOTEL & RESTAURANT

SHIPROCK, NEW MEXICO
100% CONSTRUCTION DOCUMENTS
ISSUED FOR CONSTRUCTION
NOVEMBER 3, 2023

PROJECT NUMBER	DRAWN BY	PROJ MGR
2022.10	IMEG	IMEG

ELECTRICAL PANEL SCHEDULES - HOTEL

Sheet Title

Sheet Number of

E504

11/1/2023 1:02:09 PM Autodesk Docs://23002327.00 - Shiprock Pinnacle Hotel & Restaurant/MEP22_23002327.00_Shiprock Pinnacle Hotel_C.rvt
DYRON MURPHY ARCHITECTS, P.C.

DISCONNECT AND STARTER SCHEDULE

NOTE: ALL DISCONNECTS (EXCEPT MANUAL STARTERS) SHALL BE HEAVY DUTY TYPE.

DISCONNECT TYPE:	**ACCESSORIES & OPTIONS**	
FU - FUSED	SA - STANDARD ACCESSORIES (INCLUDES...	PF - PHASE LOSS PROTECTION (5 HP OR GREATER, 3...
NF - NON-FUSED	*CT - CONTROL TRANSFORMER, FUSED...	TO - MELTING THERMAL OVERLOADS (1 PHASE)
CB - CIRCUIT BREAKER	*EO - ELECTRONIC OVERLOAD (3 PHASE...	TS - 2 SPEED SELECTOR SWITCH IN DOOR
	*HA - HAND-OFF-AUTO IN DOOR	GP - GREEN (OFF) PILOT LIGHT IN DOOR
STARTER TYPE:	*RP - RED (RUN) PILOT LIGHT IN DOOR	FA - 4-CONVERTIBLE AUXILIARY CONTACTS
FV - FULL VOLTAGE	*TA - TWO CONVERTIBLE AUXILIARY...	EI - ELECTRICAL INTERLOCK (2)-N.O. & (2)-N.C.
YD - WYE - DELTA	S/N - INSULATED NEUTRAL ASSEMBLY	SS - START-STOP PUSHBUTTON IN DOOR
RE - REVERSING		HL - HANDLE PADLOCK HASP
TW - 2 SPEED, 2 WINDING		
SW - 2 SPEED, 1 WINDING		
RV - REDUCED VOLTAGE AUTOXFMR		
SS - SOLID STATE		
MS - MANUAL STARTER		
MX - MANUAL SWITCH		
FS - FUSED SWITCH		
AMS-ASSEMBLED MOTOR STARTER		

ITEM	DISCONNECT TYPE & RATING TYPE	RATING	VOLTAGE	POLES	ENCLOSURE	COMMENTS
FDS-BP-1	FU	30 A	208 V	3	NEMA 1	FUSE PER NAMEPLATE.
FDS-CAB1	FU	30 A	208 V	3	NEMA 1	FUSE PER NAMEPLATE
FDS-CAB2	FU	30 A	208 V	3	NEMA 1	FUSE PER NAMEPLATE.
MX-CP-1	MX	15 A	120 V	1	NEMA 1	
FDS-CU 1-01	FU	60 A	208 V	3	NEMA 3R	FUSE PER NAMEPLATE.
FDS-CU 1-02A	FU	60 A	208 V	3	NEMA 3R	FUSE PER NAMEPLATE.
FDS-CU 1-02B	FU	60 A	208 V	3	NEMA 3R	FUSE PER NAMEPLATE.
FDS-CU 1-03	FU	60 A	208 V	3	NEMA 3R	FUSE PER NAMEPLATE.
FDS-CU 1-04	FU	60 A	208 V	3	NEMA 3R	FUSE PER NAMEPLATE.
FDS-CU 1-05	FU	60 A	208 V	3	NEMA 3R	FUSE PER NAMEPLATE.
FDS-CU 1-ES	FU	60 A	208 V	3	NEMA 3R	FUSE PER NAMEPLATE.
FDS-CU 2-01	FU	60 A	208 V	3	NEMA 3R	FUSE PER NAMEPLATE.
FDS-CU 2-02	FU	60 A	208 V	3	NEMA 3R	FUSE PER NAMEPLATE.
FDS-CU 3-01	FU	60 A	208 V	3	NEMA 3R	FUSE PER NAMEPLATE.
FDS-CU 3-02	FU	60 A	208 V	3	NEMA 3R	FUSE PER NAMEPLATE.
FDS-CU 4-01	FU	60 A	208 V	3	NEMA 3R	FUSE PER NAMEPLATE.
FDS-CU 4-02	FU	60 A	208 V	3	NEMA 3R	FUSE PER NAMEPLATE.
FDS-DRYER	FU	30 A	208 V	2	NEMA 1	FUSE PER NAMEPLATE.
FDS-DRYER	FU	30 A	208 V	2	NEMA 1	FUSE PER NAMEPLATE.
MX-EF-H1	MX	15 A	120 V	1	NEMA 1	
MX-EF-H2	MX	15 A	120 V	1	NEMA 1	
MX-EF-H3	MX	15 A	120 V	1	NEMA 1	
MX-EF-H4	MX	15 A	120 V	1	NEMA 1	
MX-EF-H5	MX	15 A	120 V	1	NEMA 1	
MX-EF-HA	MX	15 A	120 V	1	NEMA 1	
MX-EF-HA	MX	15 A	120 V	1	NEMA 1	
MX-EF-HA	MX	15 A	120 V	1	NEMA 1	
MX-EF-HA	MX	15 A	120 V	1	NEMA 1	
MX-EF-HA	MX	15 A	120 V	1	NEMA 1	
MX-EF-HA	MX	15 A	120 V	1	NEMA 1	
MX-EF-HA	MX	15 A	120 V	1	NEMA 1	
MX-EF-HA	MX	15 A	120 V	1	NEMA 1	
FDS-ELV1	FU	100 A	208 V	3	NEMA 1	FUSE PER NAMEPLATE. PROVIDE SHUNT TRIP
FDS-ELV2	FU	100 A	208 V	3	NEMA 1	FUSE PER NAMEPLATE. PROVIDE SHUNT TRIP
FDS-FC 1-01	FU	60 A	208 V	2	NEMA 1	FUSE PER NAMEPLATE.
FDS-FC 1-02A	FU	60 A	208 V	2	NEMA 1	FUSE PER NAMEPLATE.
FDS-FC 1-02B	FU	60 A	208 V	2	NEMA 1	FUSE PER NAMEPLATE.
FDS-FC 1-03	FU	60 A	208 V	2	NEMA 1	FUSE PER NAMEPLATE.
MX-FC 1-04	MX	15 A	208 V	2	NEMA 1	
MX-FC 1-05	MX	15 A	208 V	2	NEMA 1	
MX-FC 1-06	MX	15 A	208 V	2	NEMA 1	
MX-FC 1-07	MX	15 A	208 V	2	NEMA 1	
MX-FC 1-ES	MX	15 A	208 V	2	NEMA 1	
MX-FC 2-01	MX	15 A	208 V	2	NEMA 1	
MX-FC 2-02	MX	15 A	208 V	2	NEMA 1	
MX-FC 3-01	MX	15 A	208 V	2	NEMA 1	
MX-FC 3-02	MX	15 A	208 V	2	NEMA 1	
MX-FC 4-01	MX	15 A	208 V	2	NEMA 1	
MX-FC 4-02	MX	15 A	208 V	2	NEMA 1	
FDS-UH 1-01	FU	30 A	208 V	2	NEMA 1	FUSE PER NAMEPLATE.
FDS-UH 1-02	FU	30 A	208 V	2	NEMA 1	FUSE PER NAMEPLATE.
MX-UH 1-ME	MX	30 A	208 V	2	NEMA 1	
FDS-WASHER	FU	30 A	208 V	3	NEMA 1	FUSE PER NAMEPLATE.
FDS-WASHER	FU	30 A	208 V	3	NEMA 1	FUSE PER NAMEPLATE.
MX-WH-1	MX	15 A	120 V	1	NEMA 1	
MX-WH-2	MX	15 A	120 V	1	NEMA 1	
MX-WH-3	MX	15 A	120 V	1	NEMA 1	

PANEL XH

MOUNTING: SURFACE
ENCLOSURE: NEMA PB 1
FED FROM: 100 A/3P @ ATS-XH
LOCATION: ELECTRICAL 134

SINGLE TUB
SOLID NEUTRAL
GROUND BUS

MAIN: 100 A MCB
VOLTS: 120/208 Wye
PHASE: 3
WIRE: 4
SCCR: 10 kA
ISC: 3.83 kA

NOTES:

KEY	CKT NO.	LOAD DESCRIPTION	OCPD AMPS	P	WIRE SIZE H	N	G	VD %	A		B		C		VD %	WIRE SIZE G	N	H	OCPD P	AMPS	LOAD DESCRIPTION	CKT NO.	KEY
	1	1ST FLOO LOBBY LIGHTING	20 A	1	12	12	12	1.29	0.27	0.2					0.94	12	12	12	1	20 A	FSD	2	
	3	1ST FLOOR HALL LIGHTING	20 A	1	10	10	10	2.14			0.53	0				--	--	--	3	30 A	SPD	4	--
	5	2ND FLOOR HALL DOWNLIGHTS	20 A	1	12	12	12	1.89					0.32	0	--	--	--	--	--	--	--	6	--
	7	3RD FLOOR HALL DOWNLIGHTS	20 A	1	12	12	12	1.99	0.32	0					--	--	--	--	--	--	--	8	--
	9	4TH FLOOR HALL DOWNLIGHTS	20 A	1	12	12	12	2.06			0.32	0				--	--	--	1	20 A	SPARE	10	--
	11	EAST STAIR LIGHTING	20 A	1	12	12	12	1.71					0.33	0		--	--	--	1	20 A	SPARE	12	--
	13	WEST STAIR LIHGTING	20 A	1	12	12	12	1.06	0.33	0						--	--	--	1	20 A	SPARE	14	--
	15	EXTERIOR LIGHTTING	20 A	1	12	12	12	1.23			0.2	0				--	--	--	1	20 A	SPARE	16	--
--	17	SPARE	20 A	1	--	--	--						0	0		--	--	--	1	20 A	SPARE	18	--
								Total Load:	1.13 kVA		1.06 kVA		0.66 kVA										
								Total Amps:	9.92		9.32		5.46										

LOAD SUMMARY

LOAD CLASSIFICATION	CONNECTED LOAD	DEMAND FACTOR	ESTIMATED DEMAND	TOTALS*	
Lighting	2.64 kVA	100.00%	2.64 kVA		
Motor	0.2 kVA	100.00%	0.2 kVA	**TOTAL CONNECTED LOAD:**	2.84 kVA
				TOTAL ESTIMATED DEMAND LOAD:	2.84 kVA
				TOTAL CONNECTED AMPS:	7.88 A
				TOTAL ESTIMATED DEMAND AMPS:	7.9 A

*TOTAL DEMAND CALCS SUBTRACT ANY REDUNDANT LOAD AND THE SMALLER OF ANY NONCOINCIDENT HVAC LOADS. THIS CALC IS DONE AT EACH PANEL.

CIRCUIT KEY NOTES:

SWITCHBOARD EM

ENCLOSURE: NEMA 3R
FED FROM: 600 A/3P @ GEN
LOCATION:

SOLID NEUTRAL
GROUND BUS

MAIN: 600 A MCB
VOLTS: 120/208 Wye
PHASE: 3
WIRE: 4
SCCR: 10 kA
ISC: 5.85 kA

NOTES:

CKT	LOAD DESCRIPTION	Load	POLES	FRAME	TRIP	TYPE	ACC.	WIRE AND RACEWAY	CIRCUIT KEY
1	ATS-XH	2.84 kVA	3	150 A	100 A			4#2/0 & 1#3 EGC IN 2" C.	
2	ATS-XR	15 kVA	3	150 A	100 A			4#3 & 1#8 EGC IN 1 1/4" C.	
3	ATS-ZR	5 kVA	3	150 A	100 A			4#3 & 1#8 EGC IN 1 1/4" C.	
4	ATS-FP	60.89 kVA	3	250 A	250 A			3#250 & 1#4 EGC IN 2" C.	
5	SPARE	0 kVA	1	100 A	100 A	--	--	--	--
6	SPARE	0 kVA	1	100 A	100 A	--	--	--	--
7	SPD	0 kVA	1	60 A	60 A	--	--	--	--
8									
9									
10									
11									
12									
13									
14									
15									

LOAD SUMMARY (INCLUDES ALL TUBS IN THIS PANEL)

LOAD CLASSIFICATION	CONNECTED LOAD	DEMAND FACTOR	ESTIMATED DEMAND	TOTALS*	
Lighting	7.64 kVA	100.00%	7.64 kVA		
Motor	76.085 kVA	100.00%	76.085 kVA	**TOTAL CONNECTED LOAD:**	83.73 kVA
				TOTAL ESTIMATED DEMAND LOAD:	83.725 kVA
				TOTAL CONNECTED AMPS:	232.40 A
				TOTAL ESTIMATED DEMAND AMPS:	232.4 A

*TOTAL DEMAND CALCS SUBTRACT ANY REDUNDANT LOAD AND THE SMALLER OF ANY NONCOINCIDENT HVAC LOADS. THIS CALC IS DONE AT EACH PANEL.

CIRCUIT KEY NOTES:

IMEG
1000 E PIMA CENTER PARKWAY
SUITE 320
SCOTTSDALE, AZ 85258
P: 480.222.3771
www.IMEGCORP.COM

IMEG CORP. RESERVES PROPRIETARY RIGHTS, INCLUDING COPYRIGHTS, TO THIS DRAWING AND THE DATA SHOWN THEREON. SAID DRAWING AND DATA ARE THE EXCLUSIVE PROPERTY OF IMEG CORP. AND SHALL NOT BE USED OR REPRODUCED FOR ANY OTHER PROJECT WITHOUT THE EXPRESS WRITTEN APPROVAL AND PARTICIPATION OF IMEG CORP. ©2023 IMEG CORP.

0 1 2 3
REF. SCALE IN INCHES PROJECT #23002327.00

STAMP

DYRON MURPHY ARCHITECTS, P.C.

4505 Montbel Place NE, Albuquerque, New Mexico 87107

SHIPROCK PINNACLE HOTEL & RESTAURANT

SHIPROCK, NEW MEXICO

100% CONSTRUCTION DOCUMENTS

ISSUED FOR CONSTRUCTION

NOVEMBER 3, 2023

PROJECT NUMBER	DRAWN BY	PROJ MGR
2022.10	IMEG	IMEG

ELECTRICAL PANEL SCHEDULES - HOTEL

Sheet Title

Sheet Number of

E505

11/1/2023 1:02:10 PM
Autodesk Docs://23002327.00 - Shiprock Pinnacle Hotel & Restaurant/MEP22_23002327.00_Shiprock Pinnacle Hotel_C.rvt
DYRON MURPHY ARCHITECTS, P.C.

PANEL N2

MOUNTING: SURFACE
ENCLOSURE: NEMA PB 1
FED FROM: 600 A/3P @ MSB-R
LOCATION: MECHANICAL MECH

SINGLE TUB
SOLID NEUTRAL
GROUND BUS

MAIN: 600 A MLO
VOLTS: 120/208 Wye
PHASE: 3
WIRE: 4
SCCR: 42 kA
ISC: 24.45 kA

NOTES:

KEY	CKT NO.	LOAD DESCRIPTION	OCPD AMPS	P	WIRE SIZE H	N	G	VD %	A		B		C		VD %	WIRE SIZE G	N	H	P	OCPD AMPS	LOAD DESCRIPTION	CKT NO.	KEY
	1	PE-R1A	25 A	3	12	--	12	1.18	1.43	1.08					1.94	10	10	10	1	20 A	ROOFTOP RECEPS	2	
--	3	--	--	--	--	--	--	--			1.43	0.53			2.24	12	12	12	1	15 A	EF-R1	4	
--	5	--	--	--	--	--	--	--					1.43	1.07	2.51	12	12	12	1	25 A	KEF-3	6	
	7	PE-R1B	15 A	3	12	--	12	1.04	0.96	1.14					0.79	12	--	12	2	30 A	SS-IT	8	
--	9	--	--	--	--	--	--	--			0.96	1.14			--	--	--	--	--	--	--	10	--
--	11	--	--	--	--	--	--	--					0.96	1.14	0.58	12	--	12	2	30 A	SS-R8	12	
	13	PE-R1C	35 A	3	12	--	12	2.47	2.04	1.14					--	--	--	--	--	--	--	14	--
--	15	--	--	--	--	--	--	--			2.04	2.04			1.92	12	--	12	3	35 A	PE-R4	16	
--	17	--	--	--	--	--	--	--					2.04	2.04	--	--	--	--	--	--	--	18	--
	19	PR-R5	25 A	3	12	--	12	2.17	1.43	2.04					--	--	--	--	--	--	--	20	--
--	21	--	--	--	--	--	--	--			1.43	1.6			2.56	10	--	10	2	25 A	UH-R1	22	
--	23	--	--	--	--	--	--	--					1.43	1.6	--	--	--	--	--	--	--	24	--
--	25	SPACE	--	1	--	--	--		--	1.6					1.92	10	--	10	2	25 A	UH-R2	26	
--	27	SPACE	--	1	--	--	--				--	1.6			--	--	--	--	--	--	--	28	--
--	29	SPACE	--	1	--	--	--						--	--		--	--	--	1	--	SPACE	30	--
--	31	SPACE	--	1	--	--	--		--	1.14					0.89	12	--	12	3	20 A	KEF-1	32	
--	33	SPACE	--	1	--	--	--				--	1.14			--	--	--	--	--	--	--	34	--
--	35	SPACE	--	1	--	--	--						--	1.14	--	--	--	--	--	--	--	36	--
--	37	SPACE	--	1	--	--	--		--	1.9					1.64	12	--	12	3	20 A	KEF-2	38	
--	39	SPACE	--	1	--	--	--				--	1.9			--	--	--	--	--	--	--	40	--
--	41	SPACE	--	1	--	--	--						--	1.9	--	--	--	--	--	--	--	42	--
	43	RTU-R2	50 A	3	6	--	10	0.97	5.28	6.71					0.8	8	--	4	3	80 A	MAU-1	44	
--	45	--	--	--	--	--	--	--			5.28	6.71			--	--	--	--	--	--	--	46	--
--	47	--	--	--	--	--	--	--					5.28	6.71	--	--	--	--	--	--	--	48	--
	49	RTU-R3	50 A	3	6	--	10	0.8	5.28	7.81					2.7	8	--	4	3	70 A	RTU-R6	50	
--	51	--	--	--	--	--	--	--			5.28	7.81			--	--	--	--	--	--	--	52	--
--	53	--	--	--	--	--	--	--					5.28	7.81	--	--	--	--	--	--	--	54	--
	55	RTU-R1B	125 A	3	1	--	6	1.36	14.17	6.85					2.13	8	--	4	3	70 A	RTU-R7	56	
--	57	--	--	--	--	--	--	--			14.17	6.85			--	--	--	--	--	--	--	58	--
--	59	--	--	--	--	--	--	--					14.17	6.85	--	--	--	--	--	--	--	60	--
			Total Load:						62.01 kVA		61.92 kVA		60.86 kVA										
			Total Amps:						518.13		517.34		507.13										

LOAD SUMMARY

LOAD CLASSIFICATION	CONNECTED LOAD	DEMAND FACTOR	ESTIMATED DEMAND	TOTALS*	
Power	183.705 kVA	100.00%	183.705 kVA		
Receptacles	1.08 kVA	100.00%	1.08 kVA	**TOTAL CONNECTED LOAD:**	184.79 kVA
				TOTAL ESTIMATED DEMAND LOAD:	184.785 kVA
				TOTAL CONNECTED AMPS:	512.91 A
				TOTAL ESTIMATED DEMAND AMPS:	512.9 A

*TOTAL DEMAND CALCS SUBTRACT ANY REDUNDANT LOAD AND THE SMALLER OF ANY NONCOINCIDENT HVAC LOADS. THIS CALC IS DONE AT EACH PANEL.

CIRCUIT KEY NOTES:

PANEL L2

MOUNTING: SURFACE
ENCLOSURE: NEMA PB 1
FED FROM: 100 A/3P @ MSB-R
LOCATION: MECHANICAL MECH

SINGLE TUB
SOLID NEUTRAL
GROUND BUS

MAIN: 100 A MLO
VOLTS: 120/208 Wye
PHASE: 3
WIRE: 4
SCCR: 10 kA
ISC: 5.20 kA

NOTES:

KEY	CKT NO.	LOAD DESCRIPTION	OCPD AMPS	P	WIRE SIZE H	N	G	VD %	A		B		C		VD %	WIRE SIZE G	N	H	P	OCPD AMPS	LOAD DESCRIPTION	CKT NO.	KEY
--	1	SPARE	20 A	1	--	--	--		0	0.5					0.49	12	12	12	1	20 A	WATER SOFTNER	2	
--	3	SPARE	20 A	1	--	--	--				0	0.3			0.53	12	12	12	1	20 A	EF-R1, EF-R2, EF-R3	4	
--	5	SPARE	20 A	1	--	--	--						0	0.53	0.48	12	12	12	1	15 A	CP-1	6	
	7	ENTRY, CONFERENCE, RR LTG	20 A	1	8	8	8	2.41	0.85	0.53					0.49	12	12	12	1	15 A	WH-4	8	
	9	DINNING ROOM LTG	20 A	1	12	12	12	2.7			0.63	0.5			0.2	12	12	12	1	20 A	ALARM BELL(LOCK ON)	10	
	11	KITCHEN, BREAK, RR LTG	20 A	1	12	12	12	2.87					0.71	0.5	0.16	12	12	12	1	20 A	FACP (LOCK ON)	12	
	13	OFFICE, STORAGE, HALL LTG	20 A	1	12	12	12	2.08	0.71	1.5					2.39	10	10	10	1	20 A	EXTERIOR RECEPS	14	
	15	BANQUETTE HALL LTG	20 A	1	12	12	12	2.31			0.53	1			2.86	12	12	12	1	20 A	EXTERIOR RECEPS	16	
	17	BANQUETTE HALL LTG	20 A	1	10	10	10	2.97					0.96	1.2	1.91	12	12	12	1	20 A	HEAT TAPE (GFCI)	18	
	19	EXTERIOR LIGHTING	20 A	1	12	12	12	2.22	0.43	1.2					1.74	12	12	12	1	20 A	GENERATOR CHARGER	20	
	21	LIGHTING CONTROLLER	20 A	1	12	12	12	0.14			0.5	0.4			0.46	12	12	12	1	15 A	GEN LTG & RCP	22	
--	23	SPARE	20 A	1	--	--	--						0	0.6	0.6	12	--	12	2	20 A	GEN BLOCK HEATER	24	
--	25	SPARE	20 A	1	--	--	--		0	0.6					--	--	--	--	--	--	--	26	--
--	27	SPARE	20 A	1	--	--	--				0	0.5			0.17	12	12	12	1	20 A	GENERATOR ANNUNCIATOR	28	
--	29	SPARE	20 A	1	--	--	--						0	0		--	--	--	1	20 A	SPARE	30	--
--	31	SPARE	20 A	1	--	--	--		0	0						--	--	--	1	20 A	SPARE	32	--
--	33	SPARE	20 A	1	--	--	--				0	0				--	--	--	1	20 A	SPARE	34	--
--	35	SPARE	20 A	1	--	--	--						0	0		--	--	--	1	20 A	SPARE	36	--
--	37	SPARE	20 A	1	--	--	--		0	0						--	--	--	1	20 A	SPARE	38	--
--	39	SPARE	20 A	1	--	--	--				0	0				--	--	--	1	20 A	SPARE	40	--
--	41	SPARE	20 A	1	--	--	--						0	0		--	--	--	1	20 A	SPARE	42	--
			Total Load:						6.32 kVA		4.37 kVA		4.49 kVA										
			Total Amps:						52.83		36.38		37.61										

LOAD SUMMARY

LOAD CLASSIFICATION	CONNECTED LOAD	DEMAND FACTOR	ESTIMATED DEMAND	TOTALS*	
Lighting	4.823 kVA	100.00%	4.823 kVA		
Power	7.356 kVA	100.00%	7.356 kVA	**TOTAL CONNECTED LOAD:**	15.18 kVA
Receptacles	3 kVA	100.00%	3 kVA	**TOTAL ESTIMATED DEMAND LOAD:**	15.179 kVA
				TOTAL CONNECTED AMPS:	42.13 A
				TOTAL ESTIMATED DEMAND AMPS:	42.1 A

*TOTAL DEMAND CALCS SUBTRACT ANY REDUNDANT LOAD AND THE SMALLER OF ANY NONCOINCIDENT HVAC LOADS. THIS CALC IS DONE AT EACH PANEL.

CIRCUIT KEY NOTES:

PANEL N1

MOUNTING: SURFACE
ENCLOSURE: NEMA PB 1
FED FROM: 800 A/3P @ MSB-R
LOCATION: MECHANICAL MECH

SINGLE TUB
SOLID NEUTRAL
GROUND BUS

MAIN: 800 A MLO
VOLTS: 120/208 Wye
PHASE: 3
WIRE: 4
SCCR: 42 kA
ISC: 25.42 kA

NOTES:

KEY	CKT NO.	LOAD DESCRIPTION	OCPD AMPS	P	WIRE SIZE H	N	G	VD %	A		B		C		VD %	WIRE SIZE G	N	H	P	OCPD AMPS	LOAD DESCRIPTION	CKT NO.	KEY
	1	RTU-R1A	175 A	3	2/0	--	6	0.87	18.37	15.13					0.9	6	--	1/0	3	150 A	RTU-R4	2	
--	3	--	--	--	--	--	--	--			18.37	15.13			--	--	--	--	--	--	--	4	--
--	5	--	--	--	--	--	--	--					18.37	15.13	--	--	--	--	--	--	--	6	--
	7	RTU-R1C	200 A	3	3/0	--	6	1.35	20.42	15.37					1.82	6	--	1/0	3	150 A	RTU-R5	8	
--	9	--	--	--	--	--	--	--			20.42	15.37			--	--	--	--	--	--	--	10	--
--	11	--	--	--	--	--	--	--					20.42	15.37	--	--	--	--	--	--	--	12	--
	13	DISHWASHER	150 A	3	1/0	--	6	1.16	13.3	--					--	--	--	--	1	--	SPACE	14	--
--	15	--	--	--	--	--	--	--			13.3	--			--	--	--	--	1	--	SPACE	16	--
--	17	--	--	--	--	--	--	--					13.3	--	--	--	--	--	1	--	SPACE	18	--
--	19	SPACE	--	1	--	--	--		--	--						--	--	--	1	--	SPACE	20	--
--	21	SPACE	--	1	--	--	--				--	--				--	--	--	1	--	SPACE	22	--
--	23	SPACE	--	1	--	--	--						--	--		--	--	--	1	--	SPACE	24	--
--	25	SPACE	--	1	--	--	--		--	--						--	--	--	1	--	SPACE	26	--
--	27	SPACE	--	1	--	--	--				--	--				--	--	--	1	--	SPACE	28	--
--	29	SPACE	--	1	--	--	--						--	--		--	--	--	1	--	SPACE	30	--
			Total Load:						82.59 kVA		82.59 kVA		82.59 kVA										
			Total Amps:						688.26		688.26		688.26										

LOAD SUMMARY

LOAD CLASSIFICATION	CONNECTED LOAD	DEMAND FACTOR	ESTIMATED DEMAND	TOTALS*	
Kitchen Equip.	39.9 kVA	65.00%	25.935 kVA		
Power	207.874 kVA	100.00%	207.874 kVA	**TOTAL CONNECTED LOAD:**	247.77 kVA
				TOTAL ESTIMATED DEMAND LOAD:	233.809 kVA
				TOTAL CONNECTED AMPS:	687.75 A
				TOTAL ESTIMATED DEMAND AMPS:	649 A

*TOTAL DEMAND CALCS SUBTRACT ANY REDUNDANT LOAD AND THE SMALLER OF ANY NONCOINCIDENT HVAC LOADS. THIS CALC IS DONE AT EACH PANEL.

CIRCUIT KEY NOTES:

PANEL L1

MOUNTING: SURFACE
ENCLOSURE: NEMA PB 1
FED FROM: 100 A/3P @ MSB-R
LOCATION: MECHANICAL MECH

SINGLE TUB
SOLID NEUTRAL
GROUND BUS

MAIN: 100 A MLO
VOLTS: 120/208 Wye
PHASE: 3
WIRE: 4
SCCR: 10 kA
ISC: 5.03 kA

NOTES:

KEY	CKT NO.	LOAD DESCRIPTION	OCPD AMPS	P	WIRE SIZE H	N	G	VD %	A		B		C		VD %	WIRE SIZE G	N	H	P	OCPD AMPS	LOAD DESCRIPTION	CKT NO.	KEY
	1	BALLROOM 509 FLOORBOXES	20 A	1	12	12	12	1.86	1.08	0.18					0.3	12	12	12	1	20 A	RESTROOM 521 RECEP	2	
	3	BALLROOM 509 FLOORBOXES	20 A	1	12	12	12	2.39			1.08	0			--	--	--	--	1	20 A	SPARE	4	--
	5	BALLROOM 509 RECEPS	20 A	1	12	12	12	0.76					0.54	1.2	1.92	12	12	12	1	20 A	RESTROOM 521 HAND DRYER	6	
	7	BALLROOM 509 RECEPS	20 A	1	12	12	12	1.34	0.54	0.72					1.02	12	12	12	1	20 A	OFFICE 518 RECEPS	8	
	9	BALLROOM 509 PROJECTOR	20 A	1	12	12	12	2.24			1.2	1.04			1.11	12	12	12	1	20 A	BREAKROOM 523 RECEPS	10	
	11	BALLROOM 509 COUNTER	20 A	1	12	12	12	0.36					0.36	1.2	1.25	12	12	12	1	20 A	BREAKROOM 523 MICRO	12	
	13	BALLROOM DIVIDER	20 A	2	12	--	12	2.01	1.04	1.2					1.42	12	12	12	1	20 A	BREAKROOM 523 COFFEE	14	
--	15	--	--	--	--	--	--	--			1.04	0.9			1.06	12	12	12	1	20 A	STORAGE ROOMS RECEPS	16	
	17	BALLROOM 509 FLOORBOXES	20 A	1	12	12	12	1.92					0.72	0.54	0.58	12	12	12	1	20 A	CORR 510 JAN 513 RECEPS	18	
	19	BALLROOM 509 FLOORBOXES	20 A	1	12	12	12	2.39	0.72	0.72					0.29	12	12	12	1	20 A	OFFICE 514 RECEPS	20	
	21	BALLROOM 509 RECEPS	20 A	1	12	12	12	1.4			0.54	1			0.69	12	12	12	1	20 A	IT 524 RECEP	22	
	23	BALLROOM 509 RECEPS	20 A	1	12	12	12	1.8					0.54	1	0.7	12	12	12	1	20 A	IT 524 RECEP	24	
	25	BALLROOM 509 PROJECTOR	20 A	1	10	10	10	2.24	1.2	1					0.55	12	12	12	1	20 A	IT 524 RECEP	26	
	27	BALLROOM 509 COUNTER	20 A	1	12	12	12	0.77			0.36	0				--	--	--	1	20 A	SPARE	28	--
	29	CORRIDOR 501 RECEPS	20 A	1	10	10	10	1.84					1	1.2	2.42	10	10	10	1	20 A	MEN 503 HAND DRYER	30	
	31	DRINKING FOUNTAIN	20 A	1	12	12	12	1.64	0.5	1.2					2.27	10	10	10	1	20 A	WOMEN 504 HAND DRYER	32	
	33	BOARDROOM 502 RECEPS	20 A	1	10	10	10	2.16			0.9	1			1.52	12	12	12	1	20 A	HOSTEST RECEPS	34	
	35	BOARDROOM 502 RECEPS	20 A	1	10	10	10	2.38					0.9	0.9	1.95	10	10	10	1	20 A	RESTAURANT 102 RECEPS	36	
	37	BOARDROOM 502 COUNTER	20 A	1	12	12	12	1.37	0.36	0						--	--	--	1	20 A	SPARE	38	--
	39	BOARDROOM 502 FLOORBOX	20 A	1	12	12	12	2.87			0.72	0				--	--	--	1	20 A	SPARE	40	--
	41	MEN 503 WOMEN 504 RECEPS	20 A	1	12	12	12	1.08					0.36	0		--	--	--	1	20 A	SPARE	42	--
			Total Load:						10.46 kVA		9.78 kVA		10.46 kVA										
			Total Amps:						88.04		81.50		88.04										

LOAD SUMMARY

LOAD CLASSIFICATION	CONNECTED LOAD	DEMAND FACTOR	ESTIMATED DEMAND	TOTALS*	
Power	8.28 kVA	100.00%	8.28 kVA		
Receptacles	22.42 kVA	72.30%	16.21 kVA	**TOTAL CONNECTED LOAD:**	30.70 kVA
				TOTAL ESTIMATED DEMAND LOAD:	24.49 kVA
				TOTAL CONNECTED AMPS:	85.21 A
				TOTAL ESTIMATED DEMAND AMPS:	68 A

*TOTAL DEMAND CALCS SUBTRACT ANY REDUNDANT LOAD AND THE SMALLER OF ANY NONCOINCIDENT HVAC LOADS. THIS CALC IS DONE AT EACH PANEL.

CIRCUIT KEY NOTES:

SWITCHBOARD MSB-R

ENCLOSURE: NEMA 1
FED FROM: 2,000 A/3P @ UTILITY TRANSFORMER
LOCATION:

SOLID NEUTRAL
GROUND BUS

MAIN: 2,000 A MCB
VOLTS: 120/208 Wye
PHASE: 3
WIRE: 4
SCCR: 42 kA
ISC: 39.68 kA

NOTES: **ARC ENERGY REDUCTION REQUIRED.**

CKT	LOAD DESCRIPTION	LOAD	POLES	FRAME	TRIP	TYPE	ACC.	WIRE AND RACEWAY	CIRCUIT KEY
1	N1	247.77 kVA	3	800 A	800 A			(2) SETS OF 4#600 & 1#1/0 EGC EACH IN 3 1/2" C.	
2	N2	184.79 kVA	3	600 A	600 A			(2) SETS OF 4#350 & 1#1 EGC EACH IN 2 1/2" C.	
3	L1	30.7 kVA	3	150 A	100 A			4#3 & 1#8 EGC IN 1 1/4" C.	
4	L2	15.18 kVA	3	150 A	100 A			4#3 & 1#8 EGC IN 1 1/4" C.	
5	K1	37.27 kVA	3	250 A	225 A			4#4/0 & 1#4 EGC IN 2 1/2" C.	
6	K2	72 kVA	3	250 A	225 A			4#4/0 & 1#4 EGC IN 2 1/2" C.	
7	ATS-ZR	16.97 kVA	3	150 A	100 A			4#3 & 1#8 EGC IN 1 1/4" C.	
8	ATS-XR	3.29 kVA	3	150 A	100 A			4#3 & 1#8 EGC IN 1 1/4" C.	
9	SPARE	0 kVA	1	250 A	225 A	--	--	--	--
10	SPARE	0 kVA	1	250 A	225 A	--	--	--	--
11									
12									

LOAD SUMMARY (INCLUDES ALL TUBS IN THIS PANEL)

LOAD CLASSIFICATION	CONNECTED LOAD	DEMAND FACTOR	ESTIMATED DEMAND	TOTALS*	
Kitchen Equip.	165.42 kVA	65.00%	107.523 kVA		
Lighting	8.114 kVA	100.00%	8.114 kVA	**TOTAL CONNECTED LOAD:**	607.97 kVA
Power	407.215 kVA	100.00%	407.215 kVA	**TOTAL ESTIMATED DEMAND LOAD:**	541.462 kVA
Receptacles	27.22 kVA	68.37%	18.61 kVA	**TOTAL CONNECTED AMPS:**	1687.55 A
				TOTAL ESTIMATED DEMAND AMPS:	1,502.9 A

*TOTAL DEMAND CALCS SUBTRACT ANY REDUNDANT LOAD AND THE SMALLER OF ANY NONCOINCIDENT HVAC LOADS. THIS CALC IS DONE AT EACH PANEL.

CIRCUIT KEY NOTES:

IMEG
9000 E PIMA CENTER PARKWAY
SUITE 320
SCOTTSDALE, AZ 85258
P: 480.222.3771
www.imegcorp.com

IMEG CORP. RESERVES PROPRIETARY RIGHTS, INCLUDING COPYRIGHTS, TO THIS DRAWING AND THE DATA SHOWN THEREON. SAID DRAWING AND/OR DATA ARE THE EXCLUSIVE PROPERTY OF IMEG CORP. AND SHALL NOT BE USED OR REPRODUCED FOR ANY OTHER PROJECT WITHOUT THE EXPRESS WRITTEN APPROVAL AND PARTICIPATION OF IMEG CORP. ©2023 IMEG CORP.

0 1 2 3
REF. SCALE IN INCHES
PROJECT #23002327.00

STAMP

DYRON MURPHY ARCHITECTS, P.C.

4505 Montbel Place NE, Albuquerque, New Mexico 87107

SHIPROCK PINNACLE HOTEL & RESTAURANT

SHIPROCK, NEW MEXICO

100% CONSTRUCTION DOCUMENTS

ISSUED FOR CONSTRUCTION

NOVEMBER 3, 2023

PROJECT NUMBER	DRAWN BY	PROJ MGR
2022.10	IMEG	IMEG

ELECTRICAL PANEL SCHEDULES - RESTAURANT

Sheet Title

Sheet Number

of

E506

11/7/2023 11:05:31 AM Autodesk Docs://23002327.00 - Shiprock Pinnacle Hotel & Restaurant/MEP/2_23002327.00_Shiprock Pinnacle Restaurant_C.rvt
DYRON MURPHY ARCHITECTS, P.C.

PANEL XR

MOUNTING: SURFACE
ENCLOSURE: NEMA PB 1
FED FROM: 100 A/3P @ ATS-XR
LOCATION: MECHANICAL MECH

SINGLE TUB
SOLID NEUTRAL
GROUND BUS

MAIN: 100 A MCB
VOLTS: 120/208 Wye
PHASE: 3
WIRE: 4
SCCR: 10 kA
ISC: 4.89 kA

NOTES:

KEY	CKT NO.	LOAD DESCRIPTION	OCPD AMPS	P	WIRE SIZE H	N	G	VD %	A		B		C		VD %	WIRE SIZE G	N	H	OCPD P	AMPS	LOAD DESCRIPTION	CKT NO.	KEY
	1	ENTRY AND HALL LTG	20 A	1	12	12	12	1.76	0.37	0						--	--	--	3	30 A	SPD	2	--
	3	DINNING LTG	20 A	1	10	10	10	2			0.61	0			--	--	--	--	--	--	--	4	--
	5	KITCHEN, BREAK AND ELEC LTG	20 A	1	12	12	12	2.82					0.66	0	--	--	--	--	--	--	--	6	--
	7	BANQUETTE HALL LTG	20 A	1	12	12	12	2.42	0.51	0						--	--	--	1	20 A	SPARE	8	--
	9	BANQUETTE HALL LTG	20 A	1	10	10	10	2.72			0.92	0				--	--	--	1	20 A	SPARE	10	--
	11	EXTERIOR LTG	20 A	1	12	12	12	1.37					0.23	0		--	--	--	1	20 A	SPARE	12	--
--	13	SPACE	--	1	--	--	--		--	--						--	--	--	1	--	SPACE	14	--
--	15	SPACE	--	1	--	--	--				--	--				--	--	--	1	--	SPACE	16	--
--	17	SPACE	--	1	--	--	--						--	--		--	--	--	1	--	SPACE	18	--
								Total Load:	0.88 kVA		1.53 kVA		0.89 kVA										
								Total Amps:	7.31		12.73		7.40										

LOAD SUMMARY

LOAD CLASSIFICATION	CONNECTED LOAD	DEMAND FACTOR	ESTIMATED DEMAND	TOTALS*	
Lighting	3.291 kVA	100.00%	3.291 kVA		
				TOTAL CONNECTED LOAD:	3.29 kVA
				TOTAL ESTIMATED DEMAND LOAD:	3.291 kVA
				TOTAL CONNECTED AMPS:	9.14 A
				TOTAL ESTIMATED DEMAND AMPS:	9.1 A

*TOTAL DEMAND CALCS SUBTRACT ANY REDUNDANT LOAD AND THE SMALLER OF ANY NONCOINCIDENT HVAC LOADS. THIS CALC IS DONE AT EACH PANEL.

CIRCUIT KEY NOTES:

PANEL ZR

MOUNTING: SURFACE
ENCLOSURE: NEMA PB 1
FED FROM: 100 A/3P @ ATS-ZR
LOCATION: MECHANICAL MECH

SINGLE TUB
SOLID NEUTRAL
GROUND BUS

MAIN: 100 A MCB
VOLTS: 120/208 Wye
PHASE: 3
WIRE: 4
SCCR: 10 kA
ISC: 4.67 kA

NOTES:

KEY	CKT NO.	LOAD DESCRIPTION	OCPD AMPS	P	WIRE SIZE H	N	G	VD %	A		B		C		VD %	WIRE SIZE G	N	H	OCPD P	AMPS	LOAD DESCRIPTION	CKT NO.	KEY
	1	WALK-IN COOLER LTG	20 A	1	12	12	12	1.2	0.72	0						--	--	--	3	30 A	SPD	2	--
	3	WALK-IN FREEZER LTG	20 A	1	12	12	12	1.46			0.72	0			--	--	--	--	--	--	--	4	--
	5	WALK-IN COOLER EVAP	20 A	2	12	--	12	0.19					0.15	0	--	--	--	--	--	--	--	6	--
--	7	--	--	--	--	--	--	--	0.15	0						--	--	--	1	20 A	SPARE	8	--
	9	WALK-IN FREEZER EVAP	20 A	2	12	--	12	1.48			0.99	0				--	--	--	1	20 A	SPARE	10	--
--	11	--	--	--	--	--	--	--					0.99	0		--	--	--	1	20 A	SPARE	12	--
	13	WALK-IN COOLER CONDENSER	30 A	3	10	--	10	1.29	1.93	2.48					1.76	10	--	10	3	30 A	WALK-IN FREEZER CONDENSER	14	
--	15	--	--	--	--	--	--	--			1.93	2.48			--	--	--	--	--	--	--	16	--
--	17	--	--	--	--	--	--	--					1.93	2.48	--	--	--	--	--	--	--	18	--
								Total Load:	5.29 kVA		6.13 kVA		5.56 kVA										
								Total Amps:	44.06		51.40		46.65										

LOAD SUMMARY

LOAD CLASSIFICATION	CONNECTED LOAD	DEMAND FACTOR	ESTIMATED DEMAND	TOTALS*	
Kitchen Equip.	16.97 kVA	65.00%	11.031 kVA		
				TOTAL CONNECTED LOAD:	16.97 kVA
				TOTAL ESTIMATED DEMAND LOAD:	11.031 kVA
				TOTAL CONNECTED AMPS:	47.10 A
				TOTAL ESTIMATED DEMAND AMPS:	30.6 A

*TOTAL DEMAND CALCS SUBTRACT ANY REDUNDANT LOAD AND THE SMALLER OF ANY NONCOINCIDENT HVAC LOADS. THIS CALC IS DONE AT EACH PANEL.

CIRCUIT KEY NOTES:

PANEL K2

MOUNTING: RECESSED
ENCLOSURE: NEMA 4X
FED FROM: 225 A/3P @ MSB-R
LOCATION: CORRIDOR 3 C03

SINGLE TUB
SOLID NEUTRAL
GROUND BUS

MAIN: 225 A MLO
VOLTS: 120/208 Wye
PHASE: 3
WIRE: 4
SCCR: 42 kA
ISC: 21.47 kA

NOTES:

KEY	CKT NO.	LOAD DESCRIPTION	OCPD AMPS	P	WIRE SIZE H	N	G	VD %	A		B		C		VD %	WIRE SIZE G	N	H	OCPD P	AMPS	LOAD DESCRIPTION	CKT NO.	KEY
	1	WORK TABLE	20 A	1	12	12	12	1.2	1.2	1.05					1.16	12	--	12	2	20 A	EXPO COUNTER	2	
	3	COOK AND HOLD	30 A	2	10	--	10	0.92			2.3	1.05			--	--	--	--	--	--	--	4	--
--	5	--	--	--	--	--	--	--					2.3	0.6	0.99	12	12	12	1	20 A	POS	6	
--	7	SHUNT TRIP FOR BEAKER BELOW	--	1	--	--	--		--	0.6					0.97	12	12	12	1	20 A	POS PRINTER	8	
	9	COMOBI OVEN	20 A	2	12	--	12	0.12			0.15	1.8			2.88	12	12	12	1	20 A	MICROWAVE	10	
--	11	--	--	--	--	--	--	--					0.15	1.65	1.7	12	--	12	2	20 A	TOASTER	12	
--	13	SHUNT TRIP FOR BEAKER BELOW	--	1	--	--	--		--	1.65					--	--	--	--	--	--	--	14	--
	15	COMBI OVEN	20 A	2	12	--	12	0.12			0.15	0.7			1.04	12	12	12	1	20 A	REF. PREP TABLE	16	
--	17	--	--	--	--	--	--	--					0.15	0.96	1.28	12	12	12	1	20 A	FINISHING HEAT LAMPS	18	
--	19	SHUNT TRIP FOR BEAKER BELOW	--	1	--	--	--		--	0.96					1.15	12	12	12	1	20 A	FINISHING HEAT LAMPS	20	
	21	BRAISING PAN	80 A	3	3	--	8	0.68			7.67	0.6			0.82	12	12	12	1	20 A	POS PRINTER	22	
--	23	--	--	--	--	--	--	--					7.67	0.91	0.6	12	--	12	3	20 A	HOT FOOD WELLS	24	
--	25	--	--	--	--	--	--	--	7.67	0.91					--	--	--	--	--	--	--	26	--
--	27	SHUNT TRIP FOR BEAKER BELOW	--	1	--	--	--				--	0.91			--	--	--	--	--	--	--	28	--
	29	GAS RANGE	20 A	1	12	12	12	0.97					0.72	0.6	0.76	12	12	12	1	20 A	POS PRINTER	30	
--	31	SHUNT TRIP FOR BEAKER BELOW	--	1	--	--	--		--	0.7					0.84	12	12	12	1	20 A	REF. PREP TABLE	32	
	33	COMBI OVEN	20 A	1	12	12	12	0.64			0.6	0.6			0.69	12	12	12	1	20 A	POS PRINTER	34	
--	35	SHUNT TRIP FOR BEAKER BELOW	--	1	--	--	--						--	1.8	2.02	12	12	12	1	20 A	MICROWAVE	36	
	37	GAS RANGE	20 A	1	12	12	12	0.85	0.72	1.2					2.13	12	12	12	1	20 A	BEV. COUNTER	38	
--	39	SHUNT TRIP FOR BEAKER BELOW	--	1	--	--	--				--	1.2			2.15	12	12	12	1	20 A	BEV. COUNTER	40	
	41	REFRIGERATED BASE	20 A	1	12	12	12	1.59					1.2	1.7	2.93	12	12	12	1	20 A	TEA BREWER	42	
--	43	SHUNT TRIP FOR BEAKER BELOW	--	1	--	--	--		--	1.3					2.22	12	12	12	1	20 A	COFFEE GRINDER	44	
	45	GAS FRYER	20 A	1	12	12	12	0.83			0.6	0.3			0.54	12	12	12	1	20 A	UNDER COUNTER REF.	46	
--	47	SHUNT TRIP FOR BEAKER BELOW	--	1	--	--	--						--	2.95	1.3	10	--	8	2	40 A	COFFEE BREWER	48	
	49	WORKTOP FREEZER	20 A	1	12	12	12	0.45	0.31	2.95					--	--	--	--	--	--	--	50	--
	51	EXHAUST HOOD CONTROL UNIT	20 A	1	12	12	12	1.62			1.2	2.5			2.42	10	10	10	1	20 A	JUICE DISPENSER	52	
	53	EXHAUST HOOD	20 A	1	12	12	12	0.88					0.6	1.2	1.86	12	12	12	1	20 A	BEV. COUNTER	54	
	55	EXHAUST HOOD	20 A	1	12	12	12	0.78	0.6	0.42					0.63	12	12	12	1	20 A	SODA DISPENSER	56	
	57	GAS SHUT OFF VALVE	20 A	1	12	12	12	0.3			0.24	0.83			1.09	12	12	12	1	20 A	REFRIGERATOR	58	
	59	FIRE SUPRESSION	20 A	1	12	12	12	1.73					1.2	--		--	--	--	1	--	SPACE	60	--
								Total Load:	22.24 kVA		23.40 kVA		26.36 kVA										
								Total Amps:	185.33		196.49		221.15										

LOAD SUMMARY

LOAD CLASSIFICATION	CONNECTED LOAD	DEMAND FACTOR	ESTIMATED DEMAND	TOTALS*	
Kitchen Equip.	72 kVA	65.00%	46.8 kVA		
				TOTAL CONNECTED LOAD:	72.00 kVA
				TOTAL ESTIMATED DEMAND LOAD:	46.8 kVA
				TOTAL CONNECTED AMPS:	199.85 A
				TOTAL ESTIMATED DEMAND AMPS:	129.9 A

*TOTAL DEMAND CALCS SUBTRACT ANY REDUNDANT LOAD AND THE SMALLER OF ANY NONCOINCIDENT HVAC LOADS. THIS CALC IS DONE AT EACH PANEL.

CIRCUIT KEY NOTES:

PANEL K1

MOUNTING: RECESSED
ENCLOSURE: NEMA 4X
FED FROM: 225 A/3P @ MSB-R
LOCATION: CORRIDOR 3 C03

SINGLE TUB
SOLID NEUTRAL
GROUND BUS

MAIN: 225 A MLO
VOLTS: 120/208 Wye
PHASE: 3
WIRE: 4
SCCR: 42 kA
ISC: 25.78 kA

NOTES:

KEY	CKT NO.	LOAD DESCRIPTION	OCPD AMPS	P	WIRE SIZE H	N	G	VD %	A		B		C		VD %	WIRE SIZE G	N	H	OCPD P	AMPS	LOAD DESCRIPTION	CKT NO.	KEY
	1	AIR CURTAIN	20 A	1	12	12	12	0.18	0.3	1.8					1.1	12	12	12	1	20 A	SODA SYSTEM	2	
	3	CONV. RECP	20 A	1	12	12	12	1.13			0.72	1.7			2.17	10	10	10	1	20 A	TEA BREWER	4	
	5	WORK TABLE	20 A	1	12	12	12	1.04					1.2	2.95	1.7	10	--	8	2	40 A	COFFEE BREWER	6	
	7	WORK TABLE	20 A	1	12	12	12	1.12	1.2	2.95					--	--	--	--	--	--	--	8	--
	9	MIXER	20 A	1	12	12	12	0.98			0.96	1.3			2.77	12	12	12	1	20 A	COFFEE GRINDER	10	
	11	SLICER	20 A	1	12	12	12	0.75					0.69	1.25	1.95	12	--	12	2	20 A	DISPOSER	12	
	13	FOOD PROCESSOR	20 A	1	12	12	12	1.03	0.84	1.25					--	--	--	--	--	--	--	14	--
	15	BLENDER	20 A	1	12	12	12	0.85			0.68	1.2			2.79	12	12	12	1	20 A	BEV. COUNTER	16	
	17	ICE MACHINE	20 A	3	12	--	12	1.2					1.73	0		--	--	--	1	20 A	SPARE	18	--
--	19	--	--	--	--	--	--	--	1.73	0						--	--	--	1	20 A	SPARE	20	--
--	21	--	--	--	--	--	--	--			1.73	0				--	--	--	1	20 A	SPARE	22	--
	23	FREEZER	20 A	1	12	12	12	1.12					0.76	0		--	--	--	1	20 A	SPARE	24	--
	25	ROLL-IN REF.	20 A	1	12	12	12	1.84	1.2	0						--	--	--	1	20 A	SPARE	26	--
	27	MOBILE HOT FOOD	20 A	1	12	12	12	2.52			1.5	0				--	--	--	1	20 A	SPARE	28	--
	29	HOT PLATING CORD REEL	20 A	1	12	12	12	1.95					1.2	0		--	--	--	1	20 A	SPARE	30	--
	31	HOT PLATING CORD REEL	20 A	1	12	12	12	2.04	1.2	0						--	--	--	1	20 A	SPARE	32	--
	33	HOT PLATING CORD REEL	20 A	1	12	12	12	2.14			1.2	0				--	--	--	1	20 A	SPARE	34	--
	35	HOT PLATING CORD REEL	20 A	1	12	12	12	2.33					1.2	0		--	--	--	1	20 A	SPARE	36	--
	37	HOT PLATING HEAT LAMPS	20 A	1	12	12	12	1.94	1.2	--						--	--	--	1	--	SPACE	38	--
	39	SODA DISP	20 A	1	12	12	12	0.86			0.42	--				--	--	--	1	--	SPACE	40	--
	41	BEV. COUNTER	20 A	1	12	12	12	2.5					1.2	--		--	--	--	1	--	SPACE	42	--
								Total Load:	13.67 kVA		11.41 kVA		12.18 kVA										
								Total Amps:	114.93		95.11		102.51										

LOAD SUMMARY

LOAD CLASSIFICATION	CONNECTED LOAD	DEMAND FACTOR	ESTIMATED DEMAND	TOTALS*	
Kitchen Equip.	36.55 kVA	65.00%	23.758 kVA		
Receptacles	0.72 kVA	100.00%	0.72 kVA	TOTAL CONNECTED LOAD:	37.27 kVA
				TOTAL ESTIMATED DEMAND LOAD:	24.478 kVA
				TOTAL CONNECTED AMPS:	103.45 A
				TOTAL ESTIMATED DEMAND AMPS:	67.9 A

*TOTAL DEMAND CALCS SUBTRACT ANY REDUNDANT LOAD AND THE SMALLER OF ANY NONCOINCIDENT HVAC LOADS. THIS CALC IS DONE AT EACH PANEL.

CIRCUIT KEY NOTES:

ELECTRICAL FOOD SERVICE CONNECTION SCHEDULE

ITEM	DESCRIPTION	CONNECTION TYPE	VOLTAGE	APPARENT LOAD	PANEL	CIRCUIT NUMBER	WIRE AND RACEWAY
K1							
#1	AIR CURTAIN	MANUFACTURER SWITCH	120 V, 1Ø	0.30 kVA	K1	1	2#12 & 1#12 EGC IN 3/4" C.
#9	SODA SYSTEM	QUAD GFCI RECEPTACLE	120 V, 1Ø	1.80 kVA	K1	2	2#12 & 1#12 EGC IN 3/4" C.
#27	WORK TABLE RECEP	GFCI RECEPTACLE	120 V, 1Ø	1.20 kVA	K1	7	2#12 & 1#12 EGC IN 3/4" C.
#27	WORK TABLE RECEP	GFCI RECEPTACLE	120 V, 1Ø	1.20 kVA	K1	5	2#12 & 1#12 EGC IN 3/4" C.
#29	MIXER	GFCI RECEPTACLE	120 V, 1Ø	0.96 kVA	K1	9	2#12 & 1#12 EGC IN 3/4" C.
#30	SLICER	GFCI RECEPTACLE	120 V, 1Ø	0.69 kVA	K1	11	2#12 & 1#12 EGC IN 3/4" C.
#33	FOOD PROCESSOR	GFCI RECEPTACLE	120 V, 1Ø	0.84 kVA	K1	13	2#12 & 1#12 EGC IN 3/4" C.
#34	BLENDER	GFCI RECEPTACLE	120 V, 1Ø	0.68 kVA	K1	15	2#12 & 1#12 EGC IN 3/4" C.
#68	SODA DISPENSER	GFCI RECEPTACLE	120 V, 1Ø	0.42 kVA	K1	39	2#12 & 1#12 EGC IN 3/4" C.
#71	COFFEE BREWER	DIRECT	208 V, 1Ø	5.90 kVA	K1	6,8	2#8 & 1#10 EGC IN 3/4" C.
#72	COFFEE GRINDER	GFCI RECEPTACLE	120 V, 1Ø	1.30 kVA	K1	10	2#12 & 1#12 EGC IN 3/4" C.
#73	ICE TEA BREWER	GFCI RECEPTACLE	120 V, 1Ø	1.70 kVA	K1	4	2#10 & 1#10 EGC IN 3/4" C.
#79	DISPOSER	DIRECT	208 V, 1Ø	2.50 kVA	K1	12,14	2#12 & 1#12 EGC IN 3/4" C.
#95	BEVERAGE COUNTER	GFCI RECEPTACLE	120 V, 1Ø	1.20 kVA	K1	16	2#12 & 1#12 EGC IN 3/4" C.
#95	BEVERAGE COUNTER	GFCI RECEPTACLE	120 V, 1Ø	1.20 kVA	K1	41	2#12 & 1#12 EGC IN 3/4" C.
#98	HEAT LAMP	DIRECT	120 V, 1Ø	0.24 kVA	K1	37	2#12 & 1#12 EGC IN 3/4" C.
#98	HEAT LAMP	DIRECT	120 V, 1Ø	0.24 kVA	K1	37	2#12 & 1#12 EGC IN 3/4" C.
#98	HEAT LAMP	DIRECT	120 V, 1Ø	0.24 kVA	K1	37	2#12 & 1#12 EGC IN 3/4" C.
#98	HEAT LAMP	DIRECT	120 V, 1Ø	0.24 kVA	K1	37	2#12 & 1#12 EGC IN 3/4" C.
#98	HEAT LAMP	DIRECT	120 V, 1Ø	0.24 kVA	K1	37	2#12 & 1#12 EGC IN 3/4" C.
#99	PLATING TABLE	CELING MOUNTED GFCI W/ CORD REEL	120 V, 1Ø	1.20 kVA	K1	35	2#12 & 1#12 EGC IN 3/4" C.
#99	PLATING TABLE	CELING MOUNTED GFCI W/ CORD REEL	120 V, 1Ø	1.20 kVA	K1	33	2#12 & 1#12 EGC IN 3/4" C.
#100	HOT PLATING TABLE	CELING MOUNTED GFCI W/ CORD REEL	120 V, 1Ø	1.20 kVA	K1	29	2#12 & 1#12 EGC IN 3/4" C.
#101	DROP IN HOT FOOD UNIT	CELING MOUNTED GFCI W/ CORD REEL	120 V, 1Ø	1.20 kVA	K1	31	2#12 & 1#12 EGC IN 3/4" C.
#102	MOBILE HOT FOOD CABINET	GFCI RECEPTACLE	120 V, 1Ø	1.50 kVA	K1	27	2#12 & 1#12 EGC IN 3/4" C.
#103	FREEZER	GFCI RECEPTACLE	120 V, 1Ø	0.76 kVA	K1	23	2#12 & 1#12 EGC IN 3/4" C.
#105	ICE MACHINE	DIRECT	208 V, 3Ø	5.20 kVA	K1	17,19,21	3#12 & 1#12 EGC IN 3/4" C.
#108	ROLL-IN REFRIGERATOR	GFCI RECEPTACLE	120 V, 1Ø	1.20 kVA	K1	25	2#12 & 1#12 EGC IN 3/4" C.
K2							
#36	EXHAUST HOOD	DIRECT	120 V, 1Ø	0.60 kVA	K2	55	2#12 & 1#12 EGC IN 3/4" C.
#37	FIRE SUPPRESSION	DIRECT	120 V, 1Ø	1.20 kVA	K2	59	2#12 & 1#12 EGC IN 3/4" C.
#38	GAS RANGE	GFCI RECEPTACLE	120 V, 1Ø	0.72 kVA	K2	29	2#12 & 1#12 EGC IN 3/4" C.
#38	GAS RANGE	GFCI RECEPTACLE	120 V, 1Ø	0.72 kVA	K2	37	2#12 & 1#12 EGC IN 3/4" C.
#39	BRAISING PAN	DIRECT	208 V, 3Ø	23.00 kVA	K2	21,23,25	3#3 & 1#8 EGC IN 1" C.
#41	COMBI OVEN	GFCI RECEPTACLE	208 V, 1Ø	0.30 kVA	K2	15,17	2#12 & 1#12 EGC IN 3/4" C.
#41	COMBI OVEN	GFCI RECEPTACLE	208 V, 1Ø	0.30 kVA	K2	9,11	2#12 & 1#12 EGC IN 3/4" C.
#44	WORK TABLE RECEP	GFCI RECEPTACLE	120 V, 1Ø	1.20 kVA	K2	1	2#12 & 1#12 EGC IN 3/4" C.
#45	COOK AND HOLD	DIRECT	208 V, 1Ø	4.60 kVA	K2	3,5	2#10 & 1#10 EGC IN 3/4" C.
#46	COMBI OVEN	GFCI RECEPTACLE	120 V, 1Ø	0.60 kVA	K2	33	2#12 & 1#12 EGC IN 3/4" C.
#49	REFRIGERATED BASE	GFCI RECEPTACLE	120 V, 1Ø	1.20 kVA	K2	41	2#12 & 1#12 EGC IN 3/4" C.
#52	GAS FRYER	GFCI RECEPTACLE	120 V, 1Ø	0.60 kVA	K2	45	2#12 & 1#12 EGC IN 3/4" C.
#53	WORK TOP FREEZER	GFCI RECEPTACLE	120 V, 1Ø	0.31 kVA	K2	49	2#12 & 1#12 EGC IN 3/4" C.
#55	EXHAUST HOOD	DIRECT	120 V, 1Ø	0.60 kVA	K2	53	2#12 & 1#12 EGC IN 3/4" C.
#56	HOOD CONTROL UNIT	DIRECT	120 V, 1Ø	1.20 kVA	K2	51	2#12 & 1#12 EGC IN 3/4" C.
#58	CONVEYOR TOASTER	GFCI RECEPTACLE	208 V, 1Ø	3.30 kVA	K2	12,14	2#12 & 1#12 EGC IN 3/4" C.
#59	REFRIGERATED PREP TABLE	GFCI RECEPTACLE	120 V, 1Ø	0.70 kVA	K2	16	2#12 & 1#12 EGC IN 3/4" C.
#59	REFRIGERATED PREP TABLE	GFCI RECEPTACLE	120 V, 1Ø	0.70 kVA	K2	32	2#12 & 1#12 EGC IN 3/4" C.
#60	HOT FOOD WELLS	DIRECT	208 V, 3Ø	2.74 kVA	K2	24,26,28	3#12 & 1#12 EGC IN 3/4" C.
#62	EXPO COUNTER	DIRECT	208 V, 1Ø	2.10 kVA	K2	2,4	2#12 & 1#12 EGC IN 3/4" C.
#64	POS PRINTER	GFCI RECEPTACLE	120 V, 1Ø	0.60 kVA	K2	6	2#12 & 1#12 EGC IN 3/4" C.
#64A	POS PRINTER	GFCI RECEPTACLE	120 V, 1Ø	0.60 kVA	K2	30	2#12 & 1#12 EGC IN 3/4" C.
#64A	POS PRINTER	GFCI RECEPTACLE	120 V, 1Ø	0.60 kVA	K2	22	2#12 & 1#12 EGC IN 3/4" C.
#64A	POS PRINTER	GFCI RECEPTACLE	120 V, 1Ø	0.60 kVA	K2	8	2#12 & 1#12 EGC IN 3/4" C.
#64A	POS PRINTER	GFCI RECEPTACLE	120 V, 1Ø	0.60 kVA	K2	34	2#12 & 1#12 EGC IN 3/4" C.
#65	HEAT LAMP	DIRECT	120 V, 1Ø	0.24 kVA	K2	18	2#12 & 1#12 EGC IN 3/4" C.
#65	HEAT LAMP	DIRECT	120 V, 1Ø	0.24 kVA	K2	18	2#12 & 1#12 EGC IN 3/4" C.
#65	HEAT LAMP	DIRECT	120 V, 1Ø	0.24 kVA	K2	18	2#12 & 1#12 EGC IN 3/4" C.
#65	HEAT LAMP	DIRECT	120 V, 1Ø	0.24 kVA	K2	18	2#12 & 1#12 EGC IN 3/4" C.
#65	HEAT LAMP	DIRECT	120 V, 1Ø	0.24 kVA	K2	20	2#12 & 1#12 EGC IN 3/4" C.
#65	HEAT LAMP	DIRECT	120 V, 1Ø	0.24 kVA	K2	20	2#12 & 1#12 EGC IN 3/4" C.
#65	HEAT LAMP	DIRECT	120 V, 1Ø	0.24 kVA	K2	20	2#12 & 1#12 EGC IN 3/4" C.
#65	HEAT LAMP	DIRECT	120 V, 1Ø	0.24 kVA	K2	20	2#12 & 1#12 EGC IN 3/4" C.
#66	REFRIGERATOR	GFCI RECEPTACLE	120 V, 1Ø	0.83 kVA	K2	58	2#12 & 1#12 EGC IN 3/4" C.
#68	SODA DISPENSER	GFCI RECEPTACLE	120 V, 1Ø	0.42 kVA	K2	56	2#12 & 1#12 EGC IN 3/4" C.
#70	JUICE DISPENSER	GFCI RECEPTACLE	120 V, 1Ø	2.50 kVA	K2	52	2#10 & 1#10 EGC IN 3/4" C.
#71	COFFEE BREWER	DIRECT	208 V, 1Ø	5.90 kVA	K2	48,50	2#8 & 1#10 EGC IN 3/4" C.
#72	COFFEE GRINDER	GFCI RECEPTACLE	120 V, 1Ø	1.30 kVA	K2	44	2#12 & 1#12 EGC IN 3/4" C.
#73	ICE TEA BREWER	GFCI RECEPTACLE	120 V, 1Ø	1.70 kVA	K2	42	2#12 & 1#12 EGC IN 3/4" C.
#74	U/C REFRIGERATOR	GFCI RECEPTACLE	120 V, 1Ø	0.30 kVA	K2	46	2#12 & 1#12 EGC IN 3/4" C.
#75	BEVERAGE COUNTER	GFCI RECEPTACLE	120 V, 1Ø	1.20 kVA	K2	38	2#12 & 1#12 EGC IN 3/4" C.
#75	BEVERAGE COUNTER	GFCI RECEPTACLE	120 V, 1Ø	1.20 kVA	K2	40	2#12 & 1#12 EGC IN 3/4" C.
#75	BEVERAGE COUNTER	GFCI RECEPTACLE	120 V, 1Ø	1.20 kVA	K2	54	2#12 & 1#12 EGC IN 3/4" C.
#96A	MICROWAVE	GFCI RECEPTACLE	120 V, 1Ø	1.80 kVA	K2	10	2#12 & 1#12 EGC IN 3/4" C.
#96A	MICROWAVE	GFCI RECEPTACLE	120 V, 1Ø	1.80 kVA	K2	36	2#12 & 1#12 EGC IN 3/4" C.
N1							
#82	DISH MACHINE	DIRECT	208 V, 3Ø	39.90 kVA	N1	13,15,17	3#1/0 & 1#6 EGC IN 1 1/2" C.
ZR							
#13	WALK IN LIGHTS	DIRECT	120 V, 1Ø	0.72 kVA	ZR	3	2#12 & 1#12 EGC IN 3/4" C.
#13	WALK IN LIGHTS	DIRECT	120 V, 1Ø	0.72 kVA	ZR	1	2#12 & 1#12 EGC IN 3/4" C.
#14	COOLER EVAP	SEE DISCONNECT SCHEDULE	208 V, 1Ø	0.30 kVA	ZR	5,7	2#12 & 1#12 EGC IN 3/4" C.
#15	FREEZER EVAP	SEE DISCONNECT SCHEDULE	208 V, 1Ø	1.98 kVA	ZR	9,11	2#12 & 1#12 EGC IN 3/4" C.
#16	COOLER CONDENSER	SEE DISCONNECT SCHEDULE	208 V, 3Ø	5.80 kVA	ZR	13,15,17	3#10 & 1#10 EGC IN 3/4" C.
#17	FREEZER CONDENSER	SEE DISCONNECT SCHEDULE	208 V, 3Ø	7.45 kVA	ZR	14,16,18	3#10 & 1#10 EGC IN 3/4" C.

DISCONNECT AND STARTER SCHEDULE

NOTE: ALL DISCONNECTS (EXCEPT MANUAL STARTERS) SHALL BE HEAVY DUTY TYPE.

DISCONNECT TYPE:	**ACCESSORIES & OPTIONS**	
FU - FUSED	SA - STANDARD ACCESSORIES...	PF - PHASE LOSS PROTECTION (5 HP OR...
NF - NON-FUSED	*CT - CONTROL TRANSFORMER, FUSE...	TO - MELTING THERMAL OVERLOADS (1 PHASE)
CB - CIRCUIT BREAKER	*EO - ELECTRONIC OVERLOAD (3...	TS - 2 SPEED SELECTOR SWITCH IN DOOR
	*HA - HAND-OFF-AUTO IN DOOR	GP - GREEN (OFF) PILOT LIGHT IN DOOR
STARTER TYPE:	*RP - RED (RUN) PILOT LIGHT IN DOOR	FA - 4-CONVERTIBLE AUXILIARY CONTACTS
FV - FULL VOLTAGE	*TA - TWO CONVERTIBLE AUXILIARY...	EI - ELECTRICAL INTERLOCK (2)-N.O. & (2)-N.C.
YD - WYE - DELTA	S/N - INSULATED NEUTRAL ASSEMBLY	SS - START-STOP PUSHBUTTON IN DOOR
RE - REVERSING		HL - HANDLE PADLOCK HASP
TW - 2 SPEED, 2 WINDING		
SW - 2 SPEED, 1 WINDING		
RV - REDUCED VOLTAGE AUTOXFMR		
SS - SOLID STATE		
MS - MANUAL STARTER		
MX - MANUAL SWITCH		
FS - FUSED SWITCH		
AMS-ASSEMBLED MOTOR STARTER		

ITEM	DISCONNECT TYPE & RATING TYPE	RATING	VOLTAGE	POLES	ENCLOSURE	COMMENTS
MX-CEF-R1	MX	15 A	120 V	1	NEMA 1	
MX-CEF-R2	MX	15 A	120 V	1	NEMA 1	
MX-CEF-R3	MX	15 A	120 V	1	NEMA 1	
MX-CP-2	MX	15 A	120 V	1	NEMA 1	
FDS-EF-R1	MX	15 A	120 V	1	NEMA 3R	
FDS-KEF-1	FU	30 A	208 V	3	NEMA 3R	FUSE PER NAMEPLATE.
FDS-KEF-2	FU	30 A	208 V	3	NEMA 3R	FUSE PER NAMEPLATE.
FDS-KEF-3	FU	30 A	120 V	1	NEMA 3R	FUSE PER NAMEPLATE.
FDS-MAU-1	FU	100 A	208 V	3	NEMA 3R	FUSE PER NAMEPLATE.
FDS-PE-R1A	FU	30 A	208 V	3	NEMA 3R	FUSE PER NAMEPLATE.
FDS-PE-R1B	FU	30 A	208 V	3	NEMA 3R	FUSE PER NAMEPLATE.
FDS-PE-R1C	FU	60 A	208 V	3	NEMA 3R	FUSE PER NAMEPLATE.
FDS-PE-R4	FU	60 A	208 V	3	NEMA 3R	FUSE PER NAMEPLATE.
FDS-PE-R5	FU	30 A	208 V	3	NEMA 3R	FUSE PER NAMEPLATE.
FDS-RTU-R1A	FU	200 A	208 V	3	NEMA 3R	FUSE PER NAMEPLATE.
FDS-RTU-R1B	FU	200 A	208 V	3	NEMA 3R	FUSE PER NAMEPLATE.
FDS-RTU-R1C	FU	200 A	208 V	3	NEMA 3R	FUSE PER NAMEPLATE.
FDS-RTU-R2	FU	60 A	208 V	3	NEMA 3R	FUSE PER NAMEPLATE.
FDS-RTU-R3	FU	60 A	208 V	3	NEMA 3R	FUSE PER NAMEPLATE.
FDS-RTU-R4	FU	200 A	208 V	3	NEMA 3R	FUSE PER NAMEPLATE.
FDS-RTU-R5	FU	200 A	208 V	3	NEMA 3R	FUSE PER NAMEPLATE.
FDS-RTU-R6	FU	100 A	208 V	3	NEMA 3R	FUSE PER NAMEPLATE.
FDS-RTU-R7	FU	100 A	208 V	3	NEMA 3R	FUSE PER NAMEPLATE.
MX-SS-IT	MX	15 A	208 V	2	NEMA 1	
FDS-SS-IT	FU	30 A	208 V	2	NEMA 3R	FUSE PER NAMEPLATE.
MX-SS-R8	MX	15 A	208 V	2	NEMA 3R	FUSE PER NAMEPLATE.
FDS-SS-R8	FU	30 A	208 V	3	NEMA 1	
MX-UH R1	MX	30 A	208 V	2	NEMA 1	
MX-UH R2	MX	30 A	208 V	2	NEMA 1	
MX-WH-4	MX	15 A	120 V	1	NEMA 1	

IMEG
9000 E PIMA CENTER PARKWAY
SUITE 320
SCOTTSDALE, AZ 85258
P: 480.222.3771
www.imegcorp.com

IMEG CORP. RESERVES PROPRIETARY RIGHTS, INCLUDING COPYRIGHTS, TO THIS DRAWING AND THE DATA SHOWN THEREON. SAID DRAWING AND/OR DATA ARE THE EXCLUSIVE PROPERTY OF IMEG CORP. AND SHALL NOT BE USED OR REPRODUCED FOR ANY OTHER PROJECT WITHOUT THE EXPRESS WRITTEN APPROVAL AND PARTICIPATION OF IMEG CORP. ©2023 IMEG CORP.

0 1 2 3
REF. SCALE IN INCHES
PROJECT #23002327.00

STAMP

D. DeHAVEN
NEW MEXICO
18437
PROFESSIONAL ENGINEER
11-1-23

DYRON MURPHY ARCHITECTS, P.C.
4505 Montbel Place NE, Albuquerque, New Mexico 87107

SHIPROCK PINNACLE HOTEL & RESTAURANT
SHIPROCK, NEW MEXICO
100% CONSTRUCTION DOCUMENTS
ISSUED FOR CONSTRUCTION
NOVEMBER 3, 2023

PROJECT NUMBER	DRAWN BY	PROJ MGR
2022.10	IMEG	IMEG

ELECTRICAL PANEL SCHEDULES - RESTAURANT
Sheet Title

Sheet Number of
E507

11/1/2023 11:09:34 AM Autodesk Docs://23002327.00 - Shiprock Pinnacle Hotel & Restaurant/MEP22_23002327.00_Shiprock Pinnacle Restaurant_C.rvt
DYRON MURPHY ARCHITECTS, P.C.

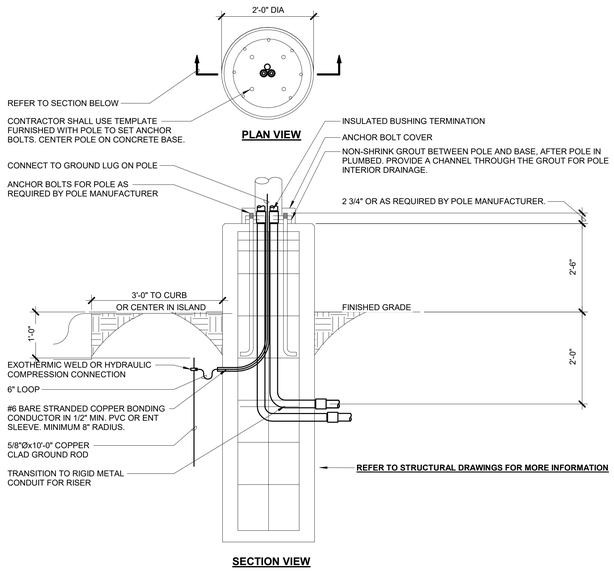

1 POLE BASE DETAIL
NO SCALE

LIGHTING CONTROL SCHEDULE

SUBSCRIPT	ZONE DESCRIPTION	CONTROL PROTOCOL	VOLTAGE	PANEL	CIRCUIT	ZONE NOTES
z1	1ST FLOOR HALL DOWNLIGHTS	0-10V	120 V	H1A	9	1
z1E	1ST FLOOR HALL DOWNLIGHTS EMERGENCY	0-10V	120 V	XH	3	1,7
z2	1ST FLOOR HALL SCONCES	0-10V	120 V	H1A	7	1
z3	2ND FLOOR HALL DOWNLIGHTS	0-10V	120 V	H1A	11	1
z3E	2ND FLOOR HALL DOWNLIGHTS EMERGENCY	0-10V	120 V	XH	5	1,7
z4	2ND FLOOR FALL SCONCES	0-10V	120 V	H1A	13	1
z5	3RD FLOOR HALL DOWNLIGHTS	0-10V	120 V	H1A	15	1
z5E	3RD FLOOR HALL DOWNLIGHTS EMERGENCY	0-10V	120 V	XH	7	1,7
z6	3RD FLOOR HALL SCONCES	0-10V	120 V	H1A	17	1
z7	4TH FLOOR HALL DOWNLIGHTS	0-10V	120 V	H1A	19	1
z7E	4TH FLOOR HALL DOWNLIGHTS EMERGENCY	0-10V	120 V	XH	9	1,7
z8	4TH FLOOR HALL SCONCES	0-10V	120 V	H1A	21	1
z9	1ST FLOOR LOBBY DOWNLIGHTS	0-10V	120 V	H1A	5	1
z9D	1ST FLOOR LOBBY DOWNLIGHTS DAYLIGHT	0-10V	120 V	H1A	5	1,6
z9DE	1ST FLOOR LOBBY DOWNLIHGTS DAYLIGHT EMERGENCY	0-10V	120 V	XH	1	1,6,7
z9E	1ST FLOOR LOBBY DOWNLIGHTS EMERGENCY	0-10V	120 V	XH	1	1,7
z10	1ST FLOOR LOBBY LINEARS	0-10V	120 V	H1A	5	1
z10E	1ST FLOOR LOBBY LINEARS EMERGENCY	0-10V	120 V	XH	1	1,7
z11	1ST FLOOR RECEPTION	0-10V	120 V	H1A	5	1
z11E	1ST FLOOR RECEPTION EMERGENCY	0-10V	120 V	XH	1	1,7
z12	1ST FLOOR RECEPTION PENDANTS	ELV	120 V	H1A	5	1
zX1	EXTERIOR SCONCES	0-10V	120 V	H1A	27	1,4
zX1E	EXTERIOR SCONCES EMERGENCY	0-10V	120 V	XH	15	1,4,7
zX2	EXTERIOR PATIO LIGHTS	ON/OFF	120 V	H1A	29	1,4
zX2E	EXTERIOR PATIO LIGHTS EMERGENCY	ON/OFF	120 V	XH	15	1,4,7
zX3	EXTERIOR CARPORT DOWNLIGHTS	0-10V	120 V	H1A	29	1,4
zX3E	EXTERIOR CARPORT DOWNLIGHTS EMERGENCY	0-10V	120 V	XH	15	1,4,7
zX4	PARKING LOT WEST	0-10V	208 V	H1A	33,35	1,4
zX5	PARKING LOT NORTH	0-10V	208 V	H1A	37,39	1,4
zx6	PARKING LOT EAST AND SOUTH	0-10V	208 V	H1A	41,43	1,4
zX7	MONUMENT SIGN LIGHTS	ON/OFF	120 V	H1A	31	1,4

LIGHTING CONTROL GENERAL NOTES:

1. PROVIDE DISTRIBUTIVE LIGHTING CONTROL SYSTEM. PROVIDE ALL NECESSARY COMPENENTS FOR A FULL INSTALLATION. COOPER WAVELINX OR APPROVED EQUAL.
2. PROVIDE DEDICATED POWER PACK PER ZONE.
3. PROVIDE FULL SHOP DRAWING FOR APROVAL.

ZONE NOTES:

1. PROVIDE RAISE, LOWER, ON/OFF, AND OVER RIDE CONTROL AT MASTER CONTROL STATION.
2. PROVIDE RAISE, LOWER, ON/OFF, AND OVER RIDE CONTROL AT LOCAL CONTROL STATION.
3. PROVIDE TIMECLOCK CONTROL PER OWNER DEFINED HOURS OF OPERATION.
4. PROVIDE TIMECLOCK CONTROL TO OPERATE AT FULL OUTPUT FROM DUSK UNTIL 2 HOURS AFTER CLOSING AND FROM 2 HOURS BEFORE OPENING UNTIL DAWN. FIXTURES TO SET BACK TO 20% OUTPUT FROM 2 HOURS AFTER CLOSING UNTIL 2 HOURS BEFORE OPENING. COORDINATE HOURS OF OPERATION WITH OWNERSHIP.
5. PROVIDE OCCUPANCY CONTROL.
6. PROVIDE DAYLIGHT HARVESTING.
7. PROVIDE UL924 RELAY TO REVERT FIXTURES TO FULL OUTPUT UPON POWER LOSS AND UNSWITCHED SENSING CIRCUIT.

LED LUMINAIRE SCHEDULE HOTEL

ITEM	DESCRIPTION	WATT ANSI WATTS	WATT PER	LED TYPE	LED DELIVERED LUMENS (MIN)	DRIVER VOLTS	DRIVER TYPE	MANUFACTURER AND MODEL
L1	6" DOWNLIGHT. PROVIDE T-BAR HANGERS FOR FIXTURES IN GRID CEILINGS. CONFRIM TRIM AND FINISH WITH ARCHITECT.	16 W	FIX	LED	1500	120 V	0-10V	PORTFOLIO #LDS6C-15-90-30-D010-S-0-MW
L6B	2x2 FLAT PANEL WITH SELECTABLE CCT. SET TO LOW OUTPUT.	21 W	FIX	LED	2700	120 V	0-10V	METALUX #22CGTS-L3C3
L8	4' SURFACE MOUNTED STRIP. FROSTED WIDE LENS.	35 W	FIX	LED	4214	120 V	0-10V	METALUX #LW-UNV-CD-1-U-AYC
L9	2X2 TROFFER.	24 W	FIX	LED	2900	120 V	0-10V	METALUX #22CZ2-29-UNV-L930-CD-1-U
L11	WALL MOUNTED STAIR LIGHT WITH BI LEVEL DIMMING AND INTEGRAL MOTION SENSOR.	37 W	FIX	LED	3600	120 V	0-10V	METALUX #4-BCLED-LD4-36SL-F-UNV-L930-SD-1-U
L12	SAME AS L11, BUT HIGHER OUTPUT AND NO INTEGRAL CONTROLS.	51 W	FIX	LED	4800	120 V	0-10V	METALUX #4-BCLED-LD4-48HL-F-UNV-L840-CD-1-U
L13	LOW VOLTAGE EXTERIOR RATED MONOPOINT. PROVIDE WITH 20W MAX LED BULB. PROVIDE 100W 12V DRIVER FOR EVERY 4 FIXTURES. CONFRIM TRIM AND FINISH WITH ARCHITECT.	20 W	FIX	LED	300	120 V	ON/OFF	LUMIERE #2003-12V-BZ-FH203-DIF-LVR
L14	RECESSED 2"X4' LINEAR. WOOD CEILING. CONFIRM TRIM AND FINISH WITH ARCHITECT.	5 W	FT	LED	485/FT	120 V	0-10V	NEO-RAY #S122DR-S-485D-90-30-FES-4F0-1-U-DD-F-C
L16	8" DECORATIVE PENDANT. CONFIRM FINISH WITH ARCHITECT.	15 W	FIX	LED	800	120 V	ELV	SHAPER #PRLX-307-FR-120
R1	24"X8" CEILING DRUM. CONFRIM TRIM AND FINISH WITH ARCHITECT.	40 W	FIX	LED	4000	120 V	0-10V	SHAPER #122-24-LS/830-UNV-MW-
R2	6" SURFACE MOUNTED PUCK. SHOWER RATED.	16 W	FIX	LED	9000	120 V	0-10V	HALO #HLS6-09-930-1E-WH
R3	WALL MOUNTED VANITY LIGHT. 34" LONG. CONFRIM TRIM AND FINISH WITH ARCHITECT.	15 W	FIX	LED	800	120 V	0-10V	PURE EDGE #TXW2-15W-4SQ-34-30K
R3B	SAME AS R3, BUT 22" LONG	9 W	FIX	LED	500	120 V	0-10V	PURE EDGE #TXW2-9W-4SQ-22-30K
S1	12" SQUARE DECORATIVE WALL MOUNT. CONFIRM TRIM AND FINISH WITH ARCHITECT.	28 W	FIX	LED	2400	120 V	0-10V	SHAPER #164-12"-WALL-L2/830-UNV-SHD
S6	MONUMENT LIGHT. MEDIUM FLOOD OPTICS.	15 W	FIX	LED	1249	120 V	ON/OFF	VISTA PRO #1045-MF-30-C-MV-ND
SP3	POLE MOUNTED SITE LIGHT. TYPE 3 DISTRIBUTION. CONFRIM TRIM AND FINISH WITH ARCHITECT. POLES TO BE 20' ABOVE GRADE INCLUDING BASE.	96 W	FIX	LED	13000	208 V	0-10V	PRV-C25-730-D-UNV-T3-SA-BZ
SP4	SAME AS SP3, BUT TYPE 4 DISTRIBUTION.	96 W	FIX	LED	13000	208 V	0-10V	PRV-C25-730-D-UNV-T4-SA-BZ
SP5	SAME AS SP3, BUT TYPE 5 DISTRIBUTION AND HIGHER OUTPUT.	153 W	FIX	LED	21000	208 V	0-10V	PRV-C60-730-D-UNV-T5-BZ
WP1	6" WALL MOUNTED CYLINDER. WIDE FLOOD. CONFIRM TRIM AND FINISH WITH ARCHITECT.	35 W	FIX	LED	3000	120 V	0-10V	FC LIGHTING #FCC400-10-WM-UNV-930-30L-BRE-72-LD
X1	UNIVERSAL MOUNT EXIT SIGN. AC ONLY. FACE AND ARROWS PER PLAN.	5 W	FIX	LED	L.E.D.	120 V	EM	ATLIGHT #REU-S-A-X-R
X2	SINGLE FACE, RECESSED, LOW-LEVEL EXIT SIGN. ARROWS PER PLAN.	5 W	FIX	LED	L.E.D.	120 V	EM	MULE LIGHTING #ML-ATX-AC-LR-1

COM*check* Software Version 4.1.5.3

Interior Lighting Compliance Certificate

Project Information

Energy Code: 2018 IECC
Project Title:
Project Type: New Construction

Construction Site:
SHIPROCK
NEW MEXICO, NM

Owner/Agent:
DYRON MURPHY ARCHITECTS
4505 MONTBEL PLACE NE
ALBUQUERQUE, NM 87107

Designer/Contractor:
IMEG
9000 E PIMA CENTER PARKWAY
SCOTTSDALE, AZ 85258

Additional Efficiency Package(s)

Credits: 1.0 Required 0.0 Proposed

Allowed Interior Lighting Power

A Area Category	B Floor Area (ft2)	C Allowed Watts / ft2	D Allowed Watts (B X C)
1-Hotel	15222	0.75	11416
		Total Allowed Watts =	11417

Proposed Interior Lighting Power

A Fixture ID : Description / Lamp / Wattage Per Lamp / Ballast	B Lamps/ Fixture	C # of Fixtures	D Fixture Watt.	E (C X D)
1-Hotel				
LED 1 L1: DOWNLIGHT: Other:	1	153	16	2448
LED 1 copy 7: L6B: TROFFER: Other:	1	13	21	273
LED 1 copy 9: L8: STRIP: Other:	1	44	35	1540
LED 1 copy 10: L9: TROFFER: Other:	1	3	24	72
LED 1 copy 11: L11: STRIP: Other:	1	36	37	1332
LED 1 copy 12: L12: STRIP: Other:	1	4	51	204
LED 1 copy 13: L14: LINEAR: Other:	1	20	5	100
LED 1 copy 14: R3B: LINEAR: Other:	1	2	9	18
LED 1 copy 15: S1: SCONCE: Other:	1	54	28	1512
			Total Proposed Watts =	7499

Interior Lighting PASSES: Design 34% better than code

Interior Lighting Compliance Statement

Compliance Statement: The proposed interior lighting design represented in this document is consistent with the building plans, specifications, and other calculations submitted with this permit application. The proposed interior lighting systems have been designed to meet the 2018 IECC requirements in COMcheck Version 4.1.5.3 and to comply with any applicable mandatory requirements listed in the Inspection Checklist.

Braden Whitaker - Designer — Name - Title
Signature
9-25-2023 — Date

Project Title: Report date: 09/25/23
Data filename: \\files\Active\Projects\2023\23002327.00\Design\Electrical\09-25-2023 HOTEL IECC.cck Page 1 of 6

IMEG
9000 E PIMA CENTER PARKWAY
SUITE 320
SCOTTSDALE, AZ 85258
P: 480.222.3771
www.imegcorp.com

IMEG CORP. RESERVES PROPRIETARY RIGHTS, INCLUDING COPYRIGHTS, TO THIS DRAWING AND THE DATA SHOWN THEREON. SAID DRAWING AND/OR DATA ARE THE EXCLUSIVE PROPERTY OF IMEG CORP. AND SHALL NOT BE USED OR REPRODUCED FOR ANY OTHER PROJECT WITHOUT THE EXPRESS WRITTEN APPROVAL AND PARTICIPATION OF IMEG CORP. ©2023 IMEG CORP.

0 1 2 3
REF. SCALE IN INCHES PROJECT #23002327.00

STAMP

DYRON MURPHY ARCHITECTS, P.C.

4505 Montbel Place NE, Albuquerque, New Mexico 87107

SHIPROCK PINNACLE HOTEL & RESTAURANT

SHIPROCK, NEW MEXICO

100% CONSTRUCTION DOCUMENTS

ISSUED FOR CONSTRUCTION

NOVEMBER 3, 2023

PROJECT NUMBER	DRAWN BY	PROJ MGR
2022.10	IMEG	IMEG

ELECTRICAL LIGHTING SCHEDULES - HOTEL

Sheet Title

Sheet Number of

E508

11/1/2023 1:02:11 PM Autodesk Docs://23002327.00 - Shiprock Pinnacle Hotel & Restaurant/M5F22_23002327.00_Shiprock Pinnacle Hotel_C.rvt
DYRON MURPHY ARCHITECTS, P.C.

COMcheck Software Version 4.1.5.3

Interior Lighting Compliance Certificate

Project Information

Energy Code: 2018 IECC
Project Title:
Project Type: New Construction

Construction Site:
SHIPROCK
NEW MEXICO, NM

Owner/Agent:
DYRON MURPHY ARCHITECTS
4505 MONTBEL PLACE NE
ALBUQUERQUE, NM 87107

Designer/Contractor:
IMEG
9000 E PIMA CENTER PARKWAY
SCOTTSDALE, AZ 85258

Additional Efficiency Package(s)

Credits: 1.0 Required 0.0 Proposed

Allowed Interior Lighting Power

A Area Category	B Floor Area (ft2)	C Allowed Watts / ft2	D Allowed Watts (B X C)
1-Dining: Bar Lounge/Leisure	13025	0.90	11722
		Total Allowed Watts =	11723

Proposed Interior Lighting Power

A Fixture ID : Description / Lamp / Wattage Per Lamp / Ballast	B Lamps/ Fixture	C # of Fixtures	D Fixture Watt.	E (C X D)
1-Dining: Bar Lounge/Leisure				
LED 1-L1: DOWNLIGHT: Other:	1	80	16	1280
LED 1 copy 1: L1W: DOWNLIGHT: Other:	1	8	10	80
LED 1 copy 2: L2: TAPELIGHT: Other:	1	96	2	192
LED 1 copy 3: L3: PENDANT: Other:	1	48	61	2928
LED 1 copy 4: L4: LINEAR PENDANT: Other:	1	1	13	13
LED 1 copy 5: L5: LINEAR: Other:	1	43	3	129
LED 1 copy 6: L6A: TROFFER: Other:	1	25	35	875
LED 1 copy 7: L6B: TROFFER: Other:	1	28	21	588
LED 1 copy 8: L7: STRIP: Other:	1	6	35	210
LED 1 copy 9: L8: STRIP: Other:	1	3	35	105
LED 1 copy 10: L15: PEDNANT: Other:	1	13	18	234
			Total Proposed Watts =	6634

Interior Lighting PASSES: Design 43% better than code

Interior Lighting Compliance Statement

Compliance Statement: The proposed interior lighting design represented in this document is consistent with the building plans, specifications, and other calculations submitted with this permit application. The proposed interior lighting systems have been designed to meet the 2018 IECC requirements in COMcheck Version 4.1.5.3 and to comply with any applicable mandatory requirements listed in the Inspection Checklist.

Braden Whitaker - Designer — Name - Title
Signature
9-25-2023 — Date

Project Title: Report date: 09/25/23
Data filename: \\files\Active\Projects\2023\23002327.00\Design\Electrical\09-25-2023 RESTAURANT IECC.cck Page 1 of 6

LIGHTING CONTROL SCHEDULE

ZONE	ZONE DESCRIPTION	CONTROL PROTOCOL	VOLTAGE	PANEL	CIRCUIT	ZONE NOTES
z1	ENTRY DOWNLIGHTS	0-10V	120 V	L2	7	1,3
z1E	ENTRY DOWNLIGHTS EMERGENCY	0-10V	120 V	XR	1	1,3,7
z3	ENTRY WALLWASHERS	0-10V	120 V	L2	7	1,3
z4	DINNING DOWNLIGHTS AND PENDANTS	0-10V	120 V	L2	9	1,3
z4D	DINNING DOWNLIGHTS AND PENDANTS DAYLIGHT	0-10V	120 V	L2	9	1,3,6
z4DE	DINNING DOWNLIGHTS AND PENDANTS EMERGENCY DAYLIGHT	0-10V	120 V	XR	3	1,3,6,7
z4E	DINNING DOWNLIGHTS AND PENDANTS EMERGENCY	0-10V	120 V	XR	3	1,3,7
z5	DINNING PENDANTS	0-10V	120 V	L2	9	1,3
z5D	DINNING PENDANTS DAYLIGHT	0-10V	120 V	L2	9	1,3,6
z5DE	DINNING PENDANTS DAYLIGHT EMERGENCY	0-10V	120 V	XR	3	1,3,6,7
z5E	DINNING PENDANTS EMERGENCY	0-10V	120 V	XR	3	1,3,7
z6	HALL DOWNLIGHTS	0-10V	120 V	L2	13	1,3
z6E	HALL DOWNLIGHTS EMERGENCY	0-10V	120 V	XR	1	1,3,7
z7	KITCHEN HALL TROFFERS	0-10V	120 V	L2	11	1,5
z7E	KITCHEN HALL TROFFERS EMERGENCY	0-10V	120 V	XR	5	1,5,7
z8	BREAKROOM TROFFERS	0-10V	120 V	L2	11	2,5
z8E	BREAKROOM TROFFERS EMERGENCY	0-10V	120 V	XR	5	2,5,7
z9	BANQUETTE PENDANTS	0-10V	120 V	L2	15	2,5
z9D	BANQUETTE PENDANTS DAYLIGHT	0-10V	120 V	L2	15	2,5,6
z9DE	BANQUETTE PENDANTS DAYLIGHT EMERGENCY	0-10V	120 V	XR	7	2,5,6,7
z9E	BANQUETTE PENDANTS EMERGENCY	0-10V	120 V	XR	7	2,5,7
z10	BANQUETTE DOWNLIGHTS	0-10V	120 V	L2	15	2,5
z10E	BANQUETTE DOWNLIGHTS EMERGENCY	0-10V	120 V	XR	7	2,5,7
z11	BANQUETTE DOWNLIGHTS	0-10V	120 V	L2	15	2,5
z12	BANQUETTE PENDANTS	0-10V	120 V	L2	17	2,5
z12D	BANQUETTE PENDANTS DAYLIGHT	0-10V	120 V	L2	17	2,5,6
z12DE	BANQUETTE PENDANTS DAYLIGHT EMERGENCY	0-10V	120 V	XR	9	2,5,6,7
z12E	BANQUETTE PENDANTS EMERGENCY	0-10V	120 V	XR	9	2,5,7
z13	BANQUETTE DOWNLIGHTS	0-10V	120 V	L2	17	2,5
z13E	BANQUETTE DOWNLIGHTS EMERGENCY	0-10V	120 V	XR	9	2,5,7
z14	BANQUETTE DOWNLIGHTS	0-10V	120 V	L2	17	2,5
z15	RECEPTION PENDANTS	ELV	120 V	L2	9	1,3
zX1	EXTERIOR SCONCES	0-10V	120 V	L2	19	1,4
zX1E	EXTERIOR SCONCES EMERGENCY	0-10V	120 V	XR	11	1,4,7
zX2	EXTERIOR LINEARS	0-10V	120 V	L2	19	1,4
zX2E	EXTERIOR LINEARS EMERGENCY	0-10V	120 V	XR	11	1,4,7
zX3	EXTERIOR DECORATIVE SCONCES	0-10V	120 V	L2	19	1,4
zX3E	EXTERIOR DOWNLIGHTS EMERGENCY	0-10V	120 V	XR	11	1,4,7

LIGHTING CONTROL GENERAL NOTES:

1. PROVIDE DISTRIBUTIVE LIGHTING CONTROL SYSTEM. PROVIDE ALL NECESSARY COMPENENTS FOR A FULL INSTALLATION. COOPER WAVELINX OR APPROVED EQUAL.
2. PROVIDE DEDICATED POWER PACK PER ZONE.
3. PROVIDE FULL SHOP DRAWING FOR APROVAL.

ZONE NOTES:

1. PROVIDE RAISE, LOWER, ON/OFF, AND OVER RIDE CONTROL AT MASTER CONTROL STATION.
2. PROVIDE RAISE, LOWER, ON/OFF, AND OVER RIDE CONTROL AT LOCAL CONTROL STATION.
3. PROVIDE TIMECLOCK CONTROL PER OWNER DEFINED HOURS OF OPERATION.
4. PROVIDE TIMECLOCK CONTROL TO OPERATE AT FULL OUTPUT FROM DUSK UNTIL 2 HOURS AFTER CLOSING AND FROM 2 HOURS BEFORE OPENING UNTIL DAWN. FIXTURES TO SET BACK TO 20% OUTPUT FROM 2 HOURS AFTER CLOSING UNTIL 2 HOURS BEFORE OPENING. COORDINATE HOURS OF OPERATION WITH OWNERSHIP.
5. PROVIDE OCCUPANCY CONTROL
6. PROVIDE DAYLIGHT HARVESTING.
7. PROVIDE UL924 RELAY TO REVERT FIXTURES TO FULL OUTPUT UPON POWER LOSS AND UNSWITCHED SENSING CIRCUIT.

LED LUMINAIRE SCHEDULE RESTAURANT

ITEM	DESCRIPTION	WATT ANSI WATTS	WATT PER	LED TYPE	LED DELIVERED LUMENS (MIN)	DRIVER VOLTS	DRIVER TYPE	MANUFACTURER AND MODEL
L1	6" DOWNLIGHT. PROVIDE T-BAR HANGERS FOR FIXTURES IN GRID CEILINGS. CONFRIM TRIM AND FINISH WITH ARCHITECT.	16 W	FIX	LED	1500	120 V	0-10V	PORTFOLIO #LDS6C-15-90-30-D010-S-0-MW
L1W	6" WALL WASH DOWNLIGHT. . CONFRIM TRIM AND FINISH WITH ARCHITECT.	10 W	FIX	LED	800	120 V	0-10V	PORTFOLIO #LD6C-08-90-30-D010-S-0-MW
L2	SURFACE MOUNTED TAPE LIGHT IN CHANEL. WET LISTED. PROVIDE 60W 24V 0-10V DIMMABLE DRIVER FOR EACH RUN.	2 W	FT	LED	276/FT	120 V	0-10V	KELVIX #UNI-WL-O-300LM/FT-30K-24V KELVIX #CH222-X-FR-CP-EC
L3	11"X18" CYLINDER PENDANT. FLOOD OPTICS. CONFIRM TRIM AND FINISH WITH ARCHITECT.	61 W	FIX	LED	6000	120 V	0-10V	KIRLIN #LSC-11RDN-6000L-WFL-30K-HC-
L4	SUSPENDED LINEAR. 375LM/FT UP. 500LM/FT DOWN. INDEPENDANT UP/DOWN DIMMING. CONFIRM TRIM AND FINISH WITH ARCHITECT.	13 W	FT	LED	375/FT UP 500/FT DOWN	120 V	0-10V	MOJO #N1B-P-D-375-500-30K-010-M-2C-A4-W-ST-WH-08
L5	2" RECESSED LINEAR. GYP BOARD MOUNT. CONFIRM TRIM AND FINISH WITH ARCHITECT.	3 W	FT	LED	290LM/FT	120 V	0-10V	S122DR-S-290D-90-30-GYP-X-1-U-DD-F-W
L6A	2X2 FLAT PANEL WITH SELECTABLE CCT. SET TO HIGH OUTPUT.	35 W	FIX	LED	4700	120 V	0-10V	METALUX #22CGTS-L3C3
L6B	SAME AS L6A, BUT SET TO LOW OUTPUT.	21 W	FIX	LED	2700	120 V	0-10V	METALUX #22CGTS-L3C3
L7	4' SUSPENDED STRIP LIGHT. FROSTED WIDE LENS.	35 W	FIX	LED	4214	120 V	0-10V	METALUX #LW-UNV-CD-1-U-AYC
L8	SAME AS L7, BUT SURFACE MOUNTED.	35 W	FIX	LED	4214	120 V	0-10V	METALUX #LW-UNV-CD-1-U-AYC
L15	12"x18" CONICAL PENDANT. CONFIRM FINISH WITH ARCHITECT.	18 W	FIX	LED	2000	120 V	0-10V	COOPER #PRLX-215-90-30K-LL3-UNV-STD-XX-XX-XX-XX-XX
L16	8" DECORATIVE PENDANT. CONFIRM FINISH WITH ARCHITECT.	15 W	FIX	LED	800	120 V	ELV	SHAPER #PRLX-307-FR-120
WP1	6" WALL MOUNTED CYLINDER. WIDE FLOOD. CONFIRM TRIM AND FINISH WITH ARCHITECT.	35 W	FIX	LED	3000	120 V	0-10V	FC LIGHTING #FCC400-10-WM-UNV-930-30L-BRE-72-LD
WP2	DECORATIVE DAMP LISTED WALL SONCE. CONFIRM TRIM AND FINISH WITH ARCHITECT.	7 W	FIX	LED	612	120 V	0-10V	MANNING #LB-380-PT-S7-30-0-D0-120-CD
X1	UNIVERSAL MOUNT EXIT SIGN. AC ONLY. FACE AND ARROWS PER PLAN.	5 W	FIX	LED	L.E.D.	120 V	EM	ATLIGHT #REU-S-A-X-R

IMEG
9000 E PIMA CENTER PARKWAY
SUITE 320
SCOTTSDALE, AZ 85258
P: 480.222.3771
www.imegcorp.com

IMEG CORP. RESERVES PROPRIETARY RIGHTS, INCLUDING COPYRIGHTS, TO THIS DRAWING AND THE DATA SHOWN THEREON. SAID DRAWING AND/OR DATA ARE THE EXCLUSIVE PROPERTY OF IMEG CORP. AND SHALL NOT BE USED OR REPRODUCED FOR ANY OTHER PROJECT WITHOUT THE EXPRESS WRITTEN APPROVAL AND PARTICIPATION OF IMEG CORP. ©2023 IMEG CORP.

0 1 2 3
REF. SCALE IN INCHES PROJECT #23002327.00

STAMP

BRIAN D. DEHAVEN
NEW MEXICO
18437
11-2-23
PROFESSIONAL ENGINEER

DYRON MURPHY ARCHITECTS, P.C.

4505 Montbel Place NE, Albuquerque, New Mexico 87107

SHIPROCK PINNACLE HOTEL & RESTAURANT

SHIPROCK, NEW MEXICO

100% CONSTRUCTION DOCUMENTS

ISSUED FOR CONSTRUCTION

NOVEMBER 3, 2023

PROJECT NUMBER	DRAWN BY	PROJ MGR
2022.10	IMEG	IMEG

ELECTRICAL LIGHTING SCHEDULES - RESTAURANT

Sheet Title

Sheet Number of

E509

11/7/2023 11:05:34 AM Autodesk Docs://23002327.00 - Shiprock Pinnacle Hotel & Restaurant/MEP/2_23002327.00_Shiprock Pinnacle Restaurant_C.rvt
DYRON MURPHY ARCHITECTS, P.C.